2006
Sprinter

CLICK HERE for MAIN MENU

Mopar PARTS

Jeep

CHRYSLER • PLYMOUTH • DODGE • JEEP

THE MOPAR DIFFERENCE

2006
Sprinter
VA

VIN PLATE DECODING INFORMATION

VIN_POS	SITION DESCRIPTI	CODE = CODE DESCRIPTION
1	Country of Origin	W = DaimlerChrysler AG
2	Assembler	D = Sprinter
3	Vehicle Type	W = Dodge Bus X = Dodge Incomplete 8 = Dodge Multipurpose Passenger Vehicle 0 = Dodge Wagon P = Freightliner Incomplete R = Freightliner Multipurpose Passenger Vehicle Y = Freightliner Wagon 1 = Sprinter Cab-Chassis 1 = Sprinter Chassis-Cab 3 = Sprinter Multipurpose Passenger Vehicle 5 = Sprinter Multipurpose Passenger Vehicle 2 = Sprinter Truck
4	GVWR & Pass. Safety	X = 4 X 2 Cab-Chassis W = 4 X 2 Multipurpose Passenger Vehicle Y = 4 X 2 Truck P = 4X2 - U.S. B = 4X4 - Canada
5	Vehicle Line	D = Combine with position 6
6	Series	1 = 2500C/C2500/P2500 3000 mm 15 in. wheel 8,001 - 9,000 lbs. Class G 2 = 2500C/C2500/P2500 3550 mm 15 in. wheel 8,001 - 9,000 lbs. Class G 6 = 2500C/C2500/P2500 3567 mm 16in. wheel 8,001 - 9,000 lbs. Class G 3 = 2500C/C2500/P2500 4025 mm 15 in. wheel 8,001 - 9,000 lbs. Class G 7 = 2500C/C2500/P2500 4042 mm 16in. wheel 8,001 - 9,000 lbs. Class G 8 = 3500C 3567 mm 16in. wheel 10,001 - 14,000 lbs. Class 3 9 = 3500C 4042 mm 16 in. wheel 10,001 - 14,000 lbs. Class 3 4 = 3500C/C3500 3550 mm 15 in. wheel 9,001 - 10,000 lbs. Class H 5 = 3500C/C3500 4025 mm 15 in. wheel 9,001 - 10,000 lbs. Class H 1 = C2500/P2500 3000 mm 15 in. wheel 8,001 - 9000 lbs. Class G 4 = C3500 3550 mm 15 in. wheel 9,001 - 10,000 lbs. Class H 5 = C3500 4025 mm 15in. wheel 9,001 - 10,000 lbs. Class H
7	Body Style	4 = Combine with position 8
8	Engine	3 = 2.7L 45 State Diesel, Hydraulic Brakes 2 = 2.7L 50 State Diesel, Hydraulic Brakes 4 = 2.7L 50 State Diesel, Hydraulic Brakes 1 = 2.7L I-5 Diesel, Hydraulic Brakes
9	Check Digit	= Check Digit
10	Model Year	6 = 2006
11	Assembly Plant	5 = Dusseldorf R = Dusseldorf

2006 Sprinter (VA)

SERIES
L =LOWLINE

LINE
3 =HD DODGE 2WD
8 =HD DODGE 4WD
6 =Lt. Duty DODGE 4WD
2 =Med. Duty DODGE 2WD
7 =Med. Duty DODGE 4WD
4 =TRUCK

BODY
01 =CHASSIS FORWARD CONTROL W.B.1
02 =CAB CHASSIS WHEEL BASE 2
06 =CAB CHASSIS WHEEL BASE 6
11 =VAN WHEEL BASE 1
12 =VAN WHEEL BASE 2
51 =WAGON WHEEL BASE 1
52 =WAGON WHEEL BASE 2
14 =VAN WHEEL BASE 4
15 =VAN WHEEL BASE 5
16 =VAN WHEEL BASE 6
54 =WAGON WHEEL BASE 4
55 =WAGON WHEEL BASE 5
56 =WAGON WHEEL BASE 6

ENGINE
EX8=2.7L I5 Turbo Diesel Engine
EX9=2.7L I5 Mercedes-Benz TD Engine

TRANSMISSION
DGJ=5-Speed Automatic MB Transmission
DGZ=4-Spd. Automatic MT643 Transmission

Group – 002
Front Suspension & Drive

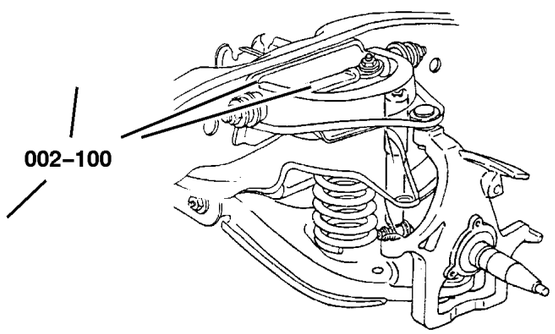

002–100
Front Suspension

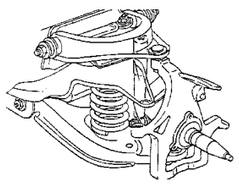

GROUP 2 - Front Suspension & Drive

Illustration Title	Group-Fig. No.
Front Suspension	
Front Control Arms, Knuckles, Bearings and Hubs	Fig. 002-110
Front Shocks	Fig. 002-120
Front Stabilzer Bar	Fig. 002-130
Front Spring	Fig. 002-140

Front Control Arms, Knuckles, Bearings and Hubs
Figure 002-110

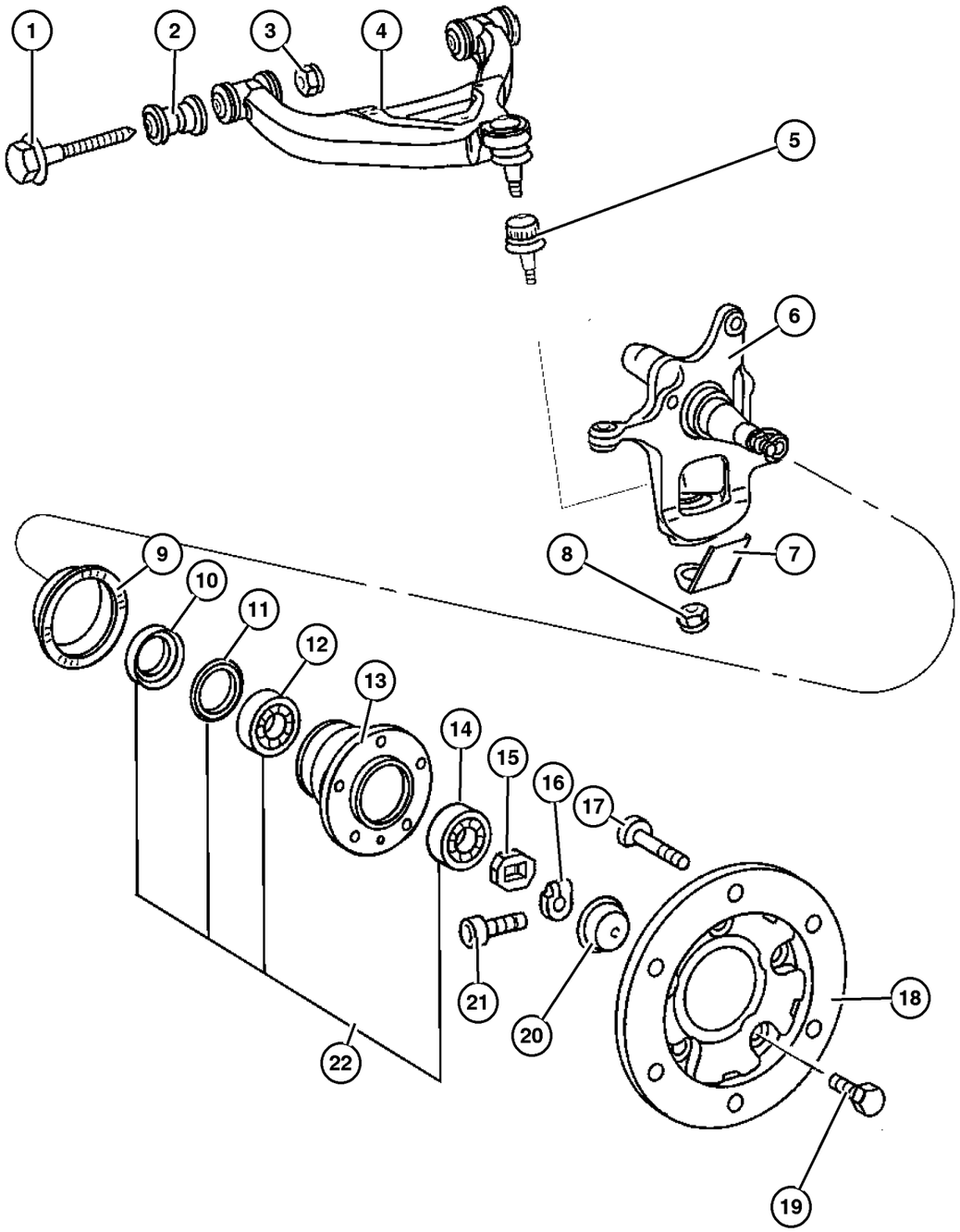

ITEM	PART NUMBER	QTY	LINE	SERIES	BODY	ENGINE	TRANS	TRIM	DESCRIPTION
Note: Sales Codes									
Note:On Up To and From parts, you will have to refer to the Vehicle Data Card.									
1	5133 819AA	4							BOLT, Hex Head
2	5133 818AA	2	2, 3, 6, 7						BUSHING, Control Arm
3									NUT
	6104 719AA	2	2, 6	L	01, 02, 06				
		2	2, 6	L	11, 12, 14, 15, 16				
		2	2, 6	L	51, 52, 54, 55, 56				
		2	3, 7	L	02, 06				
		2	3, 7	L	12, 15, 16				
4									ARM, Lower Control, Front
	5136 057AB	1	2, 3, 6, 7						Right
	5104 578AB	1	2, 3, 6, 7						Left
5	5139 559AA	2							BALL JOINT, Lower Control Arm
6									KNUCKLE, Front
	5135 232AA	1	2, 6	L	01, 02, 06				Right
	5135 233AA	1	2, 6	L	01, 02, 06				Left
	5135 232AA	1	2, 6	L	11, 12, 14, 15, 16				Right
	5135 233AA	1	2, 6	L	11, 12, 14, 15, 16				Left
	5135 232AA	1	2, 6	L	51, 52, 54, 55, 56				Right
	5135 233AA	1	2, 6	L	51, 52, 54, 55, 56				Left
	5139 492AA	1	3, 7						Right
	5104 579AA	1	3, 7						Left
7	5136 122AA	2							PLATE, Control Arm
8	5136 123AA	1	2, 3, 6, 7						NUT, Ball Joint
9	5139 358AA	2							RING, Tone
10	5103 901AB	2							SEAL, Hub
11	5139 359AA	2							SEAL, Wheel Hub
12	5103 779AA	2							BEARING, Axle, Inner
13									HUB, Front Wheel

Refer to Model Legend Information Bookmark

Front Control Arms, Knuckles, Bearings and Hubs
Figure 002-110

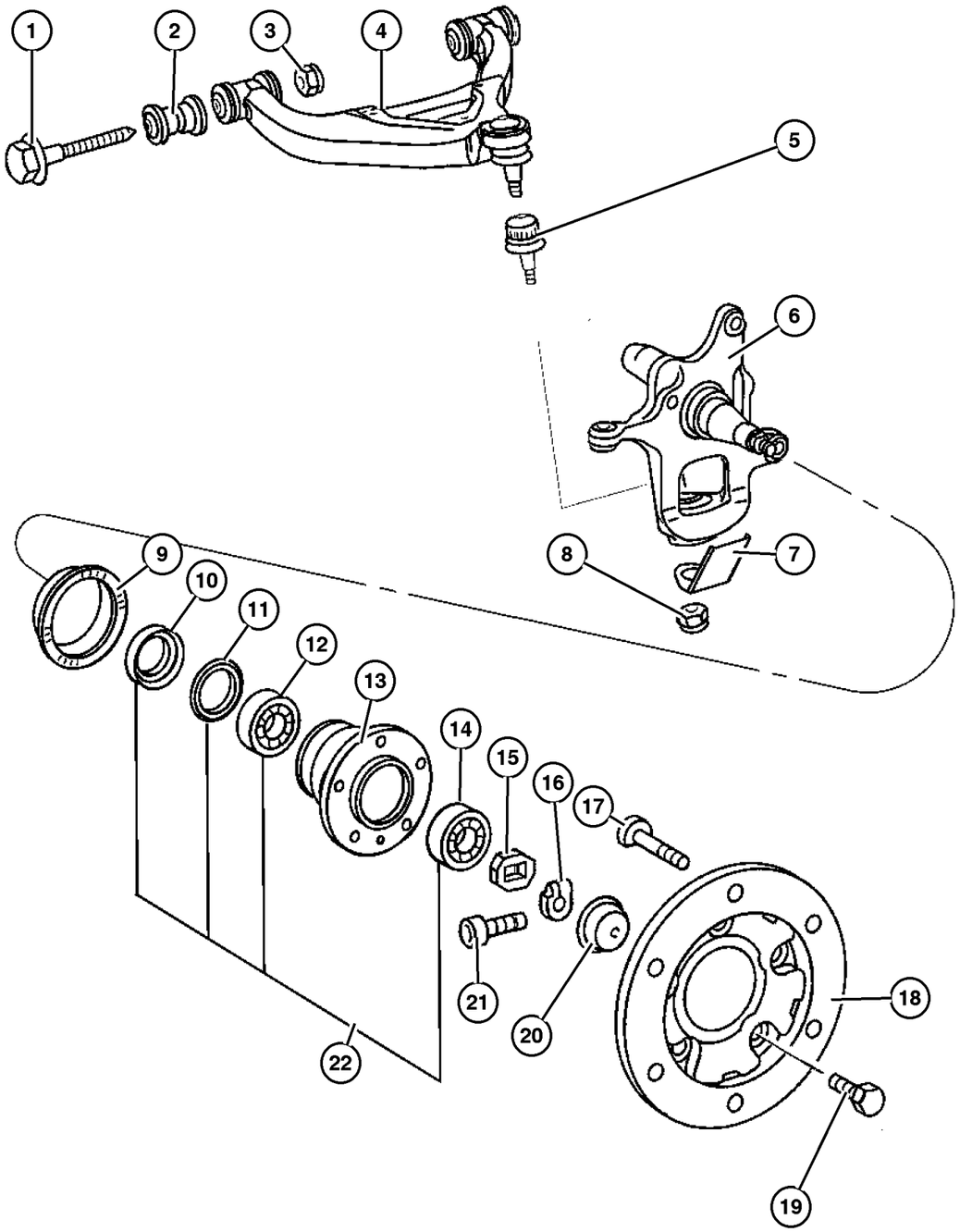

ITEM	PART NUMBER	QTY	LINE	SERIES	BODY	ENGINE	TRANS	TRIM	DESCRIPTION
	5104 556AA	2							Up To Axle S482213/Y422059
	5139 360AA	2							From Axle S482214/Y422060
14	5103 869AA	2							BEARING, Axle, Outer
15	5103 956AA	2							WASHER, Thrust, Front
16	5097 843AA	2							NUT
17	5139 905AA	2	3, 7						BOLT
18	5139 903AA	2	3, 7						FLANGE, Axle Output
19	6104 258AA	12	3, 7	L					SCREW, Hex Flange Head
20	5103 914AA	2							CAP, Wheel Hub Grease
21	5104 617AA	2							SCREW
22									HUB AND BEARING PACKAGE, Kit
	5103 579AA	1							Up To Axle S231915/Y245976
	5139 357AA	1							From Axle S4231916/Y245977

Refer to Model Legend Information Bookmark

Front Shocks
Figure 002-120

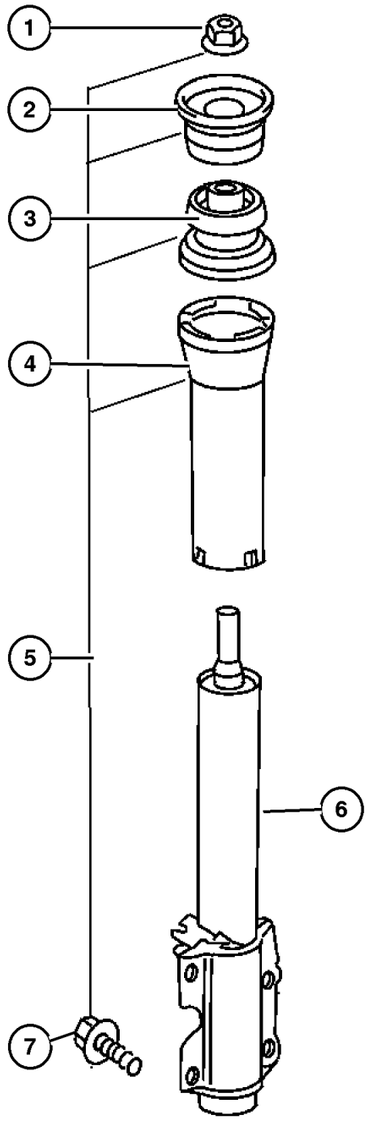

ITEM	PART NUMBER	QTY	LINE	SERIES	BODY	ENGINE	TRANS	TRIM	DESCRIPTION
Note: Sales Codes:									
[SHA]=Stabilizer Bar - Front									
[3AT]=Rear Springs Weight 3.88T									
1									NUT
	5125 762AA	2	2, 6	L	01, 02, 06				
		2	2, 6	L	11, 12, 14, 15, 16				
		2	2, 6	L	51, 52, 54, 55, 56				
		2	3, 7	L	02, 06				
		2	3, 7	L	12, 15, 16				
2									BUSHING, Shock Absorber
	5118 718AA	2	2, 6	L	01, 02, 06				
		2	2, 6	L	11, 12, 14, 15, 16				
		2	2, 6	L	51, 52, 54, 55, 56				
		2	3, 7	L	02, 06				
		2	3, 7	L	12, 15, 16				
3									BUSHING, Shock Absorber
	5118 722AA	2	2, 6	L	01, 02, 06				
		2	2, 6	L	11, 12, 14, 15, 16				
		2	2, 6	L	51, 52, 54, 55, 56				
		2	3, 7	L	02, 06				
		2	3, 7	L	12, 15, 16				
4									SHIELD, Shock Absorber Dust
	5118 728AA	2	2, 6	L	01, 02, 06				
		2	2, 6	L	11, 12, 14, 15, 16				

Refer to Model Legend Information Bookmark

Front Shocks
Figure 002-120

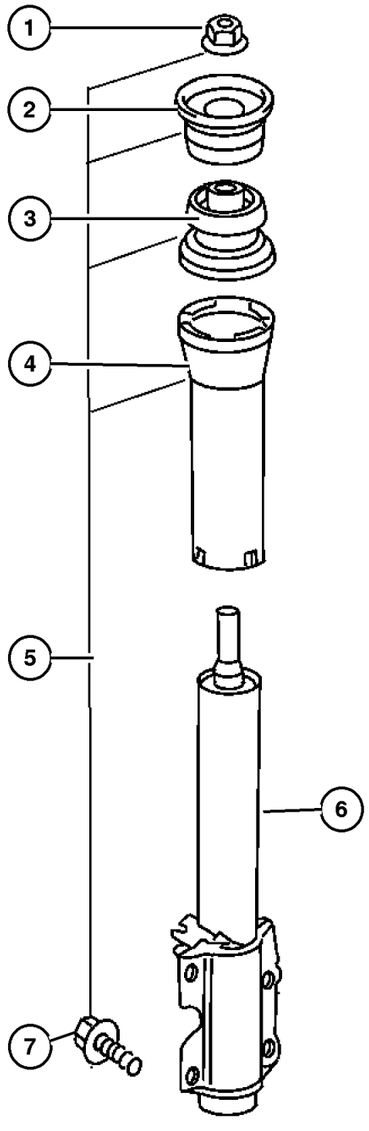

ITEM	PART NUMBER	QTY	LINE	SERIES	BODY	ENGINE	TRANS	TRIM	DESCRIPTION
		2	2, 6	L	51, 52, 54, 55, 56				
		2	3, 7	L	02, 06				
		2	3, 7	L	12, 15, 16				
5									PARTS KIT, Shock
	5133 869AA	2	2, 6	L	01, 02, 06				
		2	2, 6	L	11, 12, 14, 15, 16				
		2	2, 6	L	51, 52, 54, 55, 56				
		2	3, 7	L	02, 06				
		2	3, 7	L	12, 15, 16				
6									ABSORBER, Shock
	5104 063AA	2	2, 6	L					
	5139 548AA	2	2, 6						[3AT,SHA]
	5128 502AA	2	3, 7	L	12, 15, 16				
7	5125 699AA	8							SCREW, Strut to Knuckle, Mounting

Refer to Model Legend Information Bookmark

AR = Use as required - = Non illustrated part # = New this model year

March 3, 2006

« RETURN TO GROUP INDEX

«

Front Stabilzer Bar
Figure 002-130

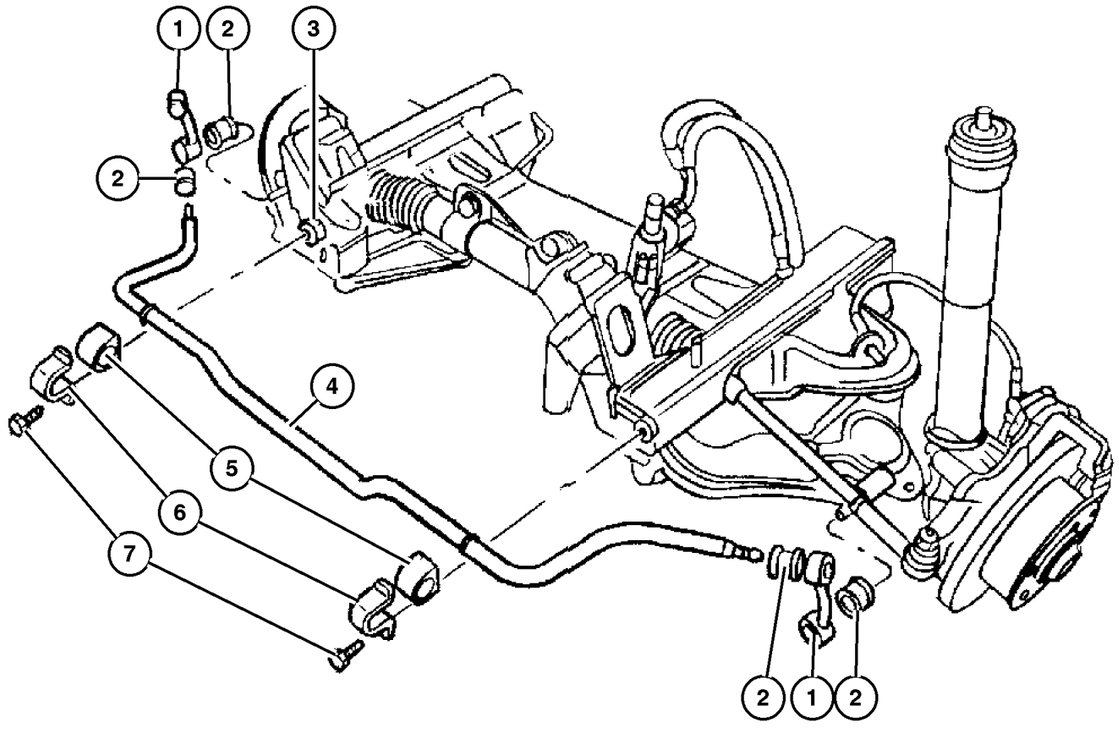

ITEM	PART NUMBER	QTY	LINE	SERIES	BODY	ENGINE	TRANS	TRIM	DESCRIPTION
Note; Sales Codes;									
[SHA]=Stabilizer Bar-Front									
[SHB]=									
[SHJ]=									
1									LINK, sway bar
	5104 060AA	1	2, 6	L	01, 02, 06				[SHA,SHJ], Right
	5104 059AA	1	2, 6	L	01, 02, 06				[SHA,SHJ], Left
	5104 060AA	1	2, 6	L	11, 12, 14, 15, 16				[SHA,SHJ], Right
	5104 059AA	1	2, 6	L	11, 12, 14, 15, 16				[SHA,SHJ], Left
	5104 060AA	1	2, 6	L	51, 52, 54, 55, 56				[SHA,SHJ], Right
	5104 059AA	1	2, 6	L	51, 52, 54, 55, 56				[SHA,SHJ], Left
	5127 277AA	1	2, 6	L	11, 12, 14, 15, 16				[SHB], Right
	5127 276AA	1	2, 6	L	11, 12, 14, 15, 16				[SHB], Left
	5104 060AA	1	3, 7	L	02, 06				[SHJ], Right
	5104 059AA	1	3, 7	L	02, 06				[SHJ], Left
	5104 060AA	1	3, 7	L	12, 15, 16				[SHJ], Right
	5104 059AA	1	3, 7	L	12, 15, 16				[SHJ], Left
2									BUSHING
	5104 066AA	4	2, 6	L	01, 02, 06				
		4	2, 6	L	11, 12, 14, 15, 16				
		4	2, 6	L	51, 52, 54, 55, 56				
		4	3, 7	L	02, 06				
		4	3, 7	L	12, 15, 16				
3									NUT

Refer to Model Legend Information Bookmark

Front Stabilzer Bar
Figure 002-130

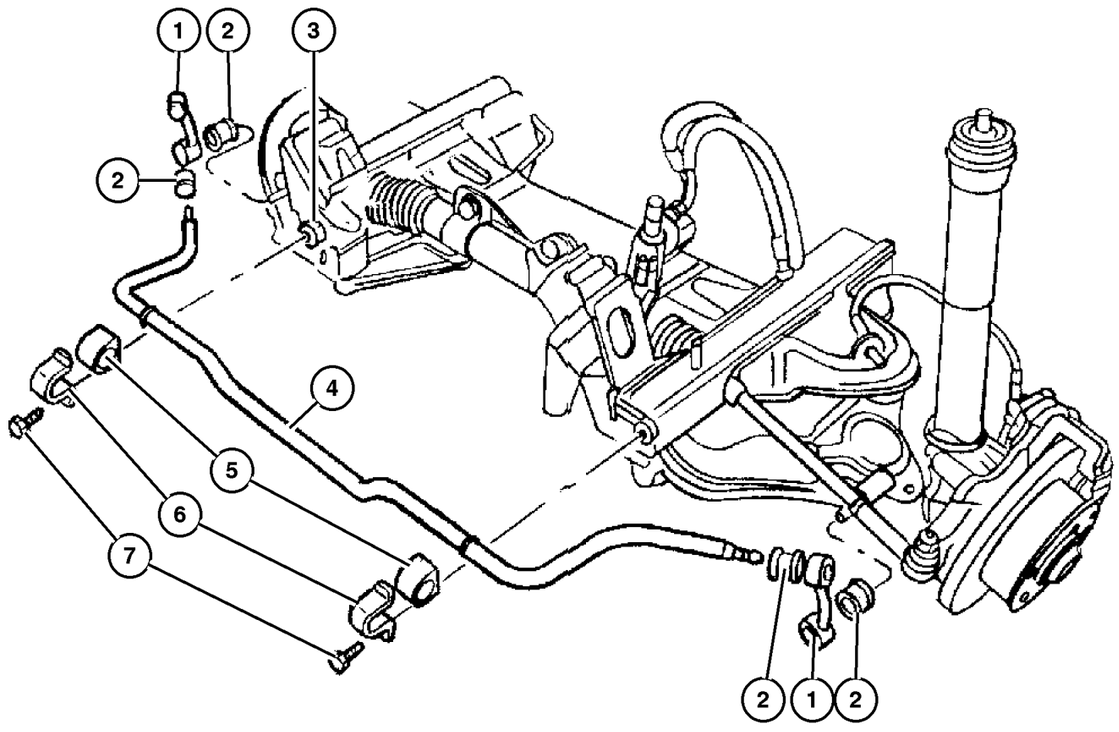

ITEM	PART NUMBER	QTY	LINE	SERIES	BODY	ENGINE	TRANS	TRIM	DESCRIPTION
	5104 677AA	2	2, 6	L	01, 02, 06				
		2	2, 6	L	11, 12, 14, 15, 16				
		2	2, 6	L	51, 52, 54, 55, 56				
		2	3, 7	L	02, 06				
		2	3, 7	L	12, 15, 16				
4									BAR, Front Sway
	5104 576AA	1	2, 6	L	01, 02, 06				[SHA]
	5128 572AA	1	2, 6	L	01, 02, 06				[SHJ]
	5104 576AA	1	2, 6	L	11, 12, 14, 15, 16				[SHA]
		1	2, 6	L	51, 52, 54, 55, 56				[SHA]
	5127 272AA	1	2, 6	L	11, 12, 14, 15, 16				[SHB]
	5128 572AA	1	2, 6	L	11, 12, 14, 15, 16				[SHJ]
		1	2, 6	L	51, 52, 54, 55, 56				[SHJ]
	5104 576AA	1	3, 7	L	02, 06				[SHJ]
		1	3, 7	L	12, 15, 16				[SHJ]
5									BUSHING, Sway Bar
	5104 577AA	2	2, 6	L	01, 02, 06				[SHA]
		2	2, 6	L	11, 12, 14, 15, 16				[SHA]
		2	2, 6	L	51, 52, 54, 55, 56				[SHA]

Refer to Model Legend Information Bookmark

AR = Use as required - = Non illustrated part # = New this model year

March 3, 2006

« RETURN TO GROUP INDEX

« »

Front Stabilzer Bar
Figure 002-130

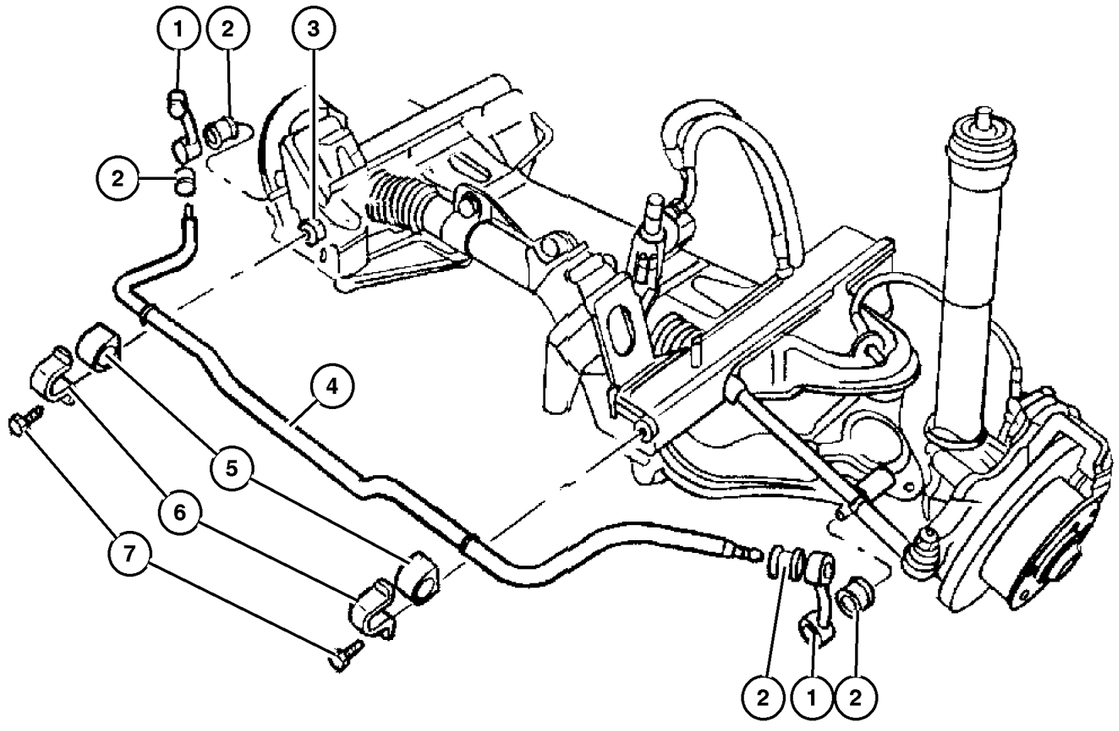

ITEM	PART NUMBER	QTY	LINE	SERIES	BODY	ENGINE	TRANS	TRIM	DESCRIPTION
	5127 273AA	2	2, 6	L	11, 12, 14, 15, 16				[SHB]
	5104 065AA	2	2, 6	L	01, 02, 06				[SHJ]
		2	2, 6	L	11, 12, 14, 15, 16				[SHJ]
		2	2, 6	L	51, 52, 54, 55, 56				[SHJ]
	5104 577AA	2	3, 7	L	02, 06				[SHJ]
		2	3, 7	L	12, 15, 16				[SHJ]
6									RETAINER, Sway Bar
	5104 067AA	2	2, 6	L	01, 02, 06				[SHA,SHJ]
		2	2, 6	L	11, 12, 14, 15, 16				[SHA,SHJ]
		2	2, 6	L	51, 52, 54, 55, 56				[SHA,SHJ]
	5127 274AA	2	2, 6	L	11, 12, 14, 15, 16				[SHB]
	5104 067AA	2	3, 7	L	02, 06				[SHJ]
		2	3, 7	L	12, 15, 16				[SHJ]
7									BOLT
	5104 656AA	2	2, 6	L	01, 02, 06				
		2	2, 6	L	11, 12, 14, 15, 16				
		2	2, 6	L	51, 52, 54, 55, 56				
		2	3, 7	L	02, 06				
		2	3, 7	L	12, 15, 16				

Refer to Model Legend Information Bookmark

AR = Use as required - = Non illustrated part # = New this model year

March 3, 2006

« RETURN TO GROUP INDEX

«

Front Spring
Figure 002-140

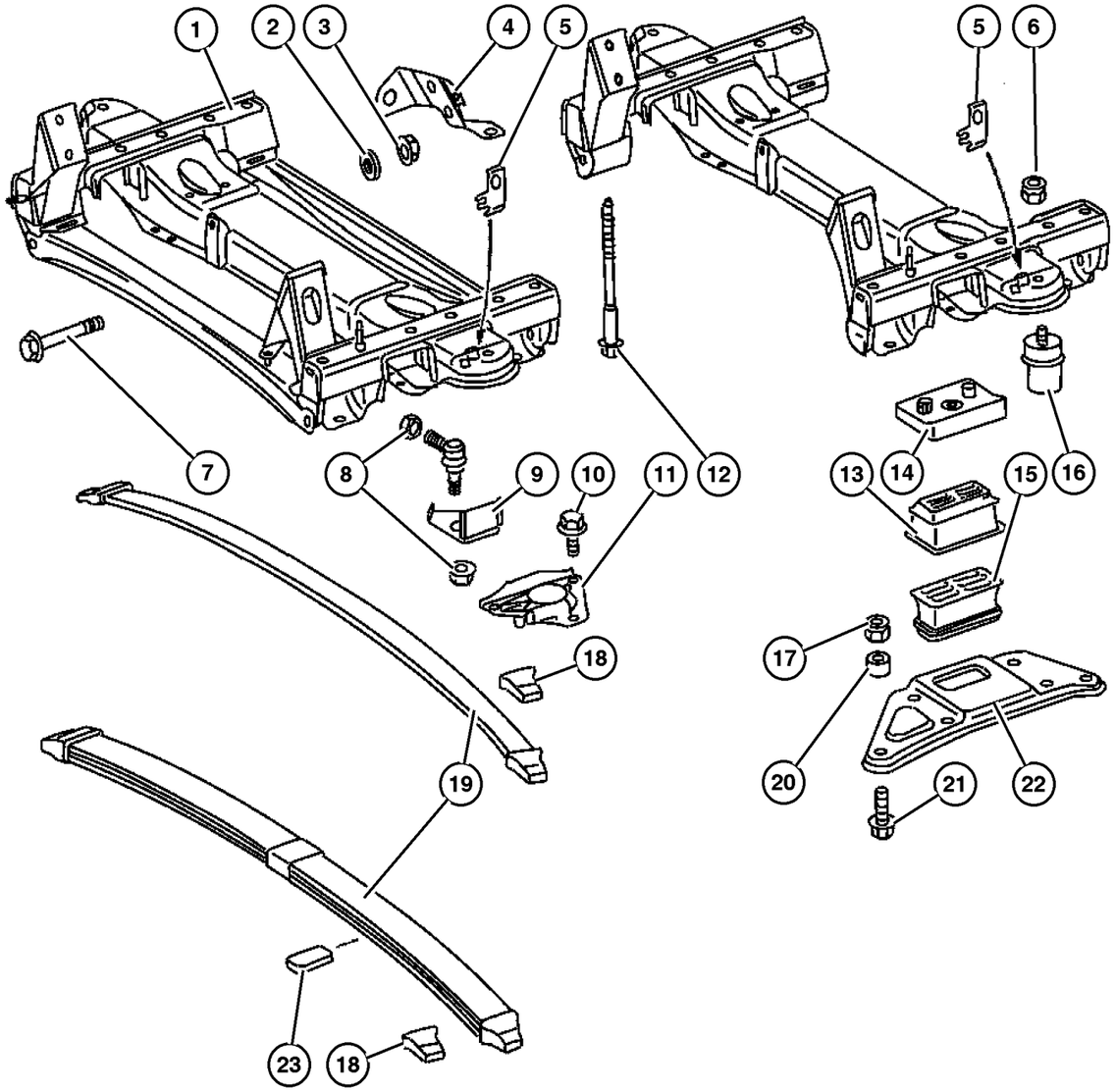

ITEM	PART NUMBER	QTY	LINE	SERIES	BODY	ENGINE	TRANS	TRIM	DESCRIPTION
Note: Sales Codes									
Note:On Up To and From parts, you will have to refer to the Vehicle Data Card.									
Note:On SV#'s [Special Version codes], refer to the Vehicle Data Card.									
1									CROSSMEMBER, Front Axle
	5104 074AA	1	2, 6						
	5139 740AA	1							
2									WASHER, (NOT SERVICED) (Not Serviced)
3									NUT
	6104 718AA	2	2, 6	L	01, 02, 06				
		2	2, 6	L	11, 12, 14, 15, 16				
		2	2, 6	L	51, 52, 54, 55, 56				
		2	3, 7	L	02, 06				
		2	3, 7	L	12, 15, 16				
4									BRACKET, Steering Gear
	5119 553AA	1	2, 6	L	01, 02, 06				
		1	2, 6	L	11, 12, 14, 15, 16				
		1	2, 6	L	51, 52, 54, 55, 56				
		1	3, 7	L	02, 06				
		1	3, 7	L	12, 15, 16				
5									BRACKET, (NOT SERVICED) (Not Serviced)
6									NUT
	5132 896AA	6	2, 6	L	11, 12, 14, 15, 16				
		6	2, 6	L	51, 52, 54, 55, 56				
7									SCREW
	5125 714AA	4	2, 6	L	01, 02, 06				

Refer to Model Legend Information Bookmark

AR = Use as required - = Non illustrated part # = New this model year

March 3, 2006

« RETURN TO GROUP INDEX

»

Front Spring
Figure 002-140

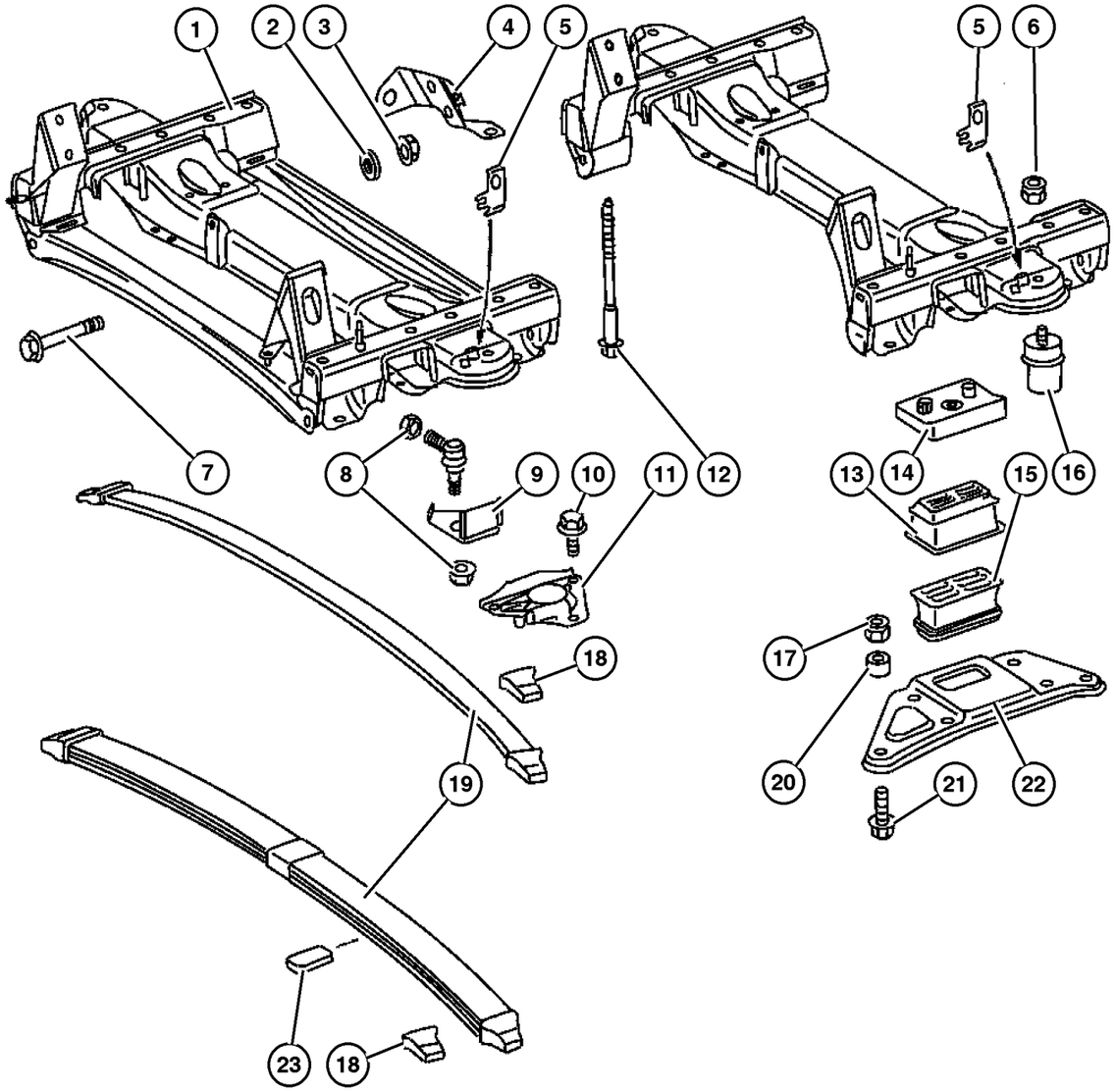

ITEM	PART NUMBER	QTY	LINE	SERIES	BODY	ENGINE	TRANS	TRIM	DESCRIPTION
		4	2, 6	L	11, 12, 14, 15, 16				
		4	2, 6	L	51, 52, 54, 55, 56				
		4	3, 7	L	02, 06				
		4	3, 7	L	12, 15, 16				
8									NUT
	5125 761AA	2	2, 6	L	01, 02, 06				
		2	2, 6	L	11, 12, 14, 15, 16				
		2	2, 6	L	51, 52, 54, 55, 56				
		2	3, 7	L	02, 06				
		2	3, 7	L	12, 15, 16				
9									PLATE, Backing
	5119 249AA	2	2, 6	L	01, 02, 06				
		2	2, 6	L	11, 12, 14, 15, 16				
		2	2, 6	L	51, 52, 54, 55, 56				
		2	3, 7	L	02, 06				
		2	3, 7	L	12, 15, 16				
10									BOLT
	5126 233AA	6	2, 6	L	01, 02, 06				
		6	2, 6	L	11, 12, 14, 15, 16				
		6	2, 6	L	51, 52, 54, 55, 56				
		6	3, 7	L	02, 06				
		6	3, 7	L	12, 15, 16				
11									PLATE, Sway Bar

Refer to Model Legend Information Bookmark

AR = Use as required - = Non illustrated part # = New this model year

March 3, 2006

« RETURN TO GROUP INDEX

« »

Front Spring
Figure 002-140

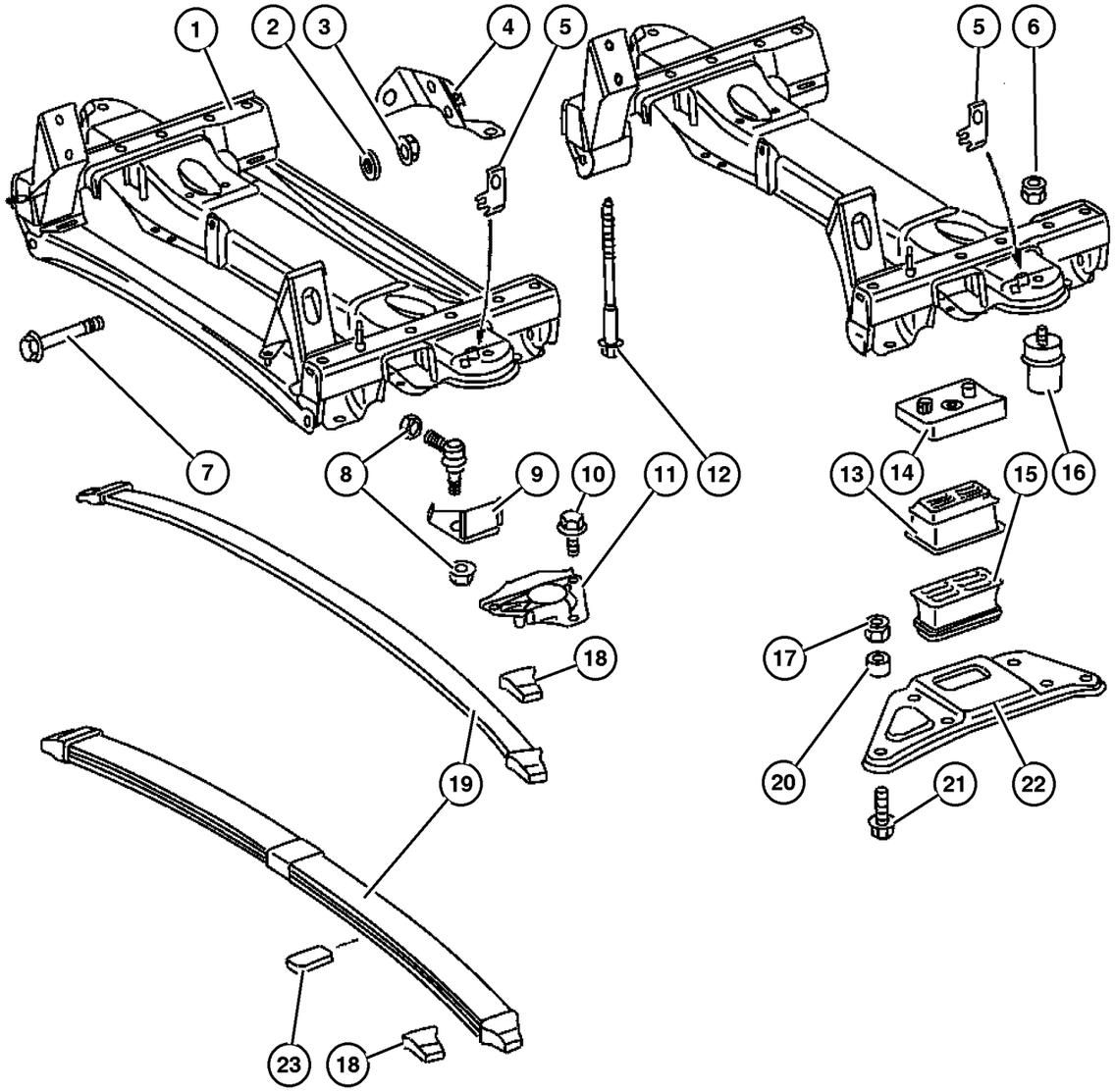

ITEM	PART NUMBER	QTY	LINE	SERIES	BODY	ENGINE	TRANS	TRIM	DESCRIPTION
	5104 064AA	1	2, 6	L	01, 02, 06				With [SHA,SHJ,WDG], Right
	5118 707AA	1	2, 6	L	01, 02, 06				With [SHA,SHJ,WDG], Left
	5104 064AA	1	2, 6	L	11, 12, 14, 15, 16				With [SHA,SHJ,WDG], Right
	5118 707AA	1	2, 6	L	11, 12, 14, 15, 16				With [SHA,SHJ,WDG], Left
	5104 064AA	1	2, 6	L	51, 52, 54, 55, 56				With [SHA,SHJ,WDG], Right
	5118 707AA	1	2, 6	L	51, 52, 54, 55, 56				With [SHA,SHJ,WDG], Left
	5104 064AA	1	3, 7	L	02, 06				[SHJ], Right
	5118 707AA	1	3, 7	L	02, 06				[SHJ], Left
	5104 064AA	1	3, 7	L	12, 15, 16				[SHJ], Right
	5118 707AA	1	3, 7	L	12, 15, 16				[SHJ], Left
	5118 705AA	1	2, 6	L	01, 02, 06				Without [SHA,SHJ,WDG], Right or Left
		1	2, 6	L	11, 12, 14, 15, 16				Without [SHA,SHJ,WDG], Right or Left
		1	2, 6	L	51, 52, 54, 55, 56				Without [SHA,SHJ,WDG], Right or Left
		1	3, 7	L	02, 06				Without [SHJ], Right or Left
		1	3, 7	L	12, 15, 16				Without [SHJ], Right or Left
12									SCREW AND WASHER, Hex
	5125 726AA	8	2, 6	L	01, 02, 06				
		8	2, 6	L	11, 12, 14, 15, 16				
		8	2, 6	L	51, 52, 54, 55, 56				
		8	3, 7	L	02, 06				
		8	3, 7	L	12, 15, 16				
13									SEAT, Spring

Refer to Model Legend Information Bookmark

AR = Use as required - = Non illustrated part # = New this model year

March 3, 2006

« RETURN TO GROUP INDEX

« »

Front Spring
Figure 002-140

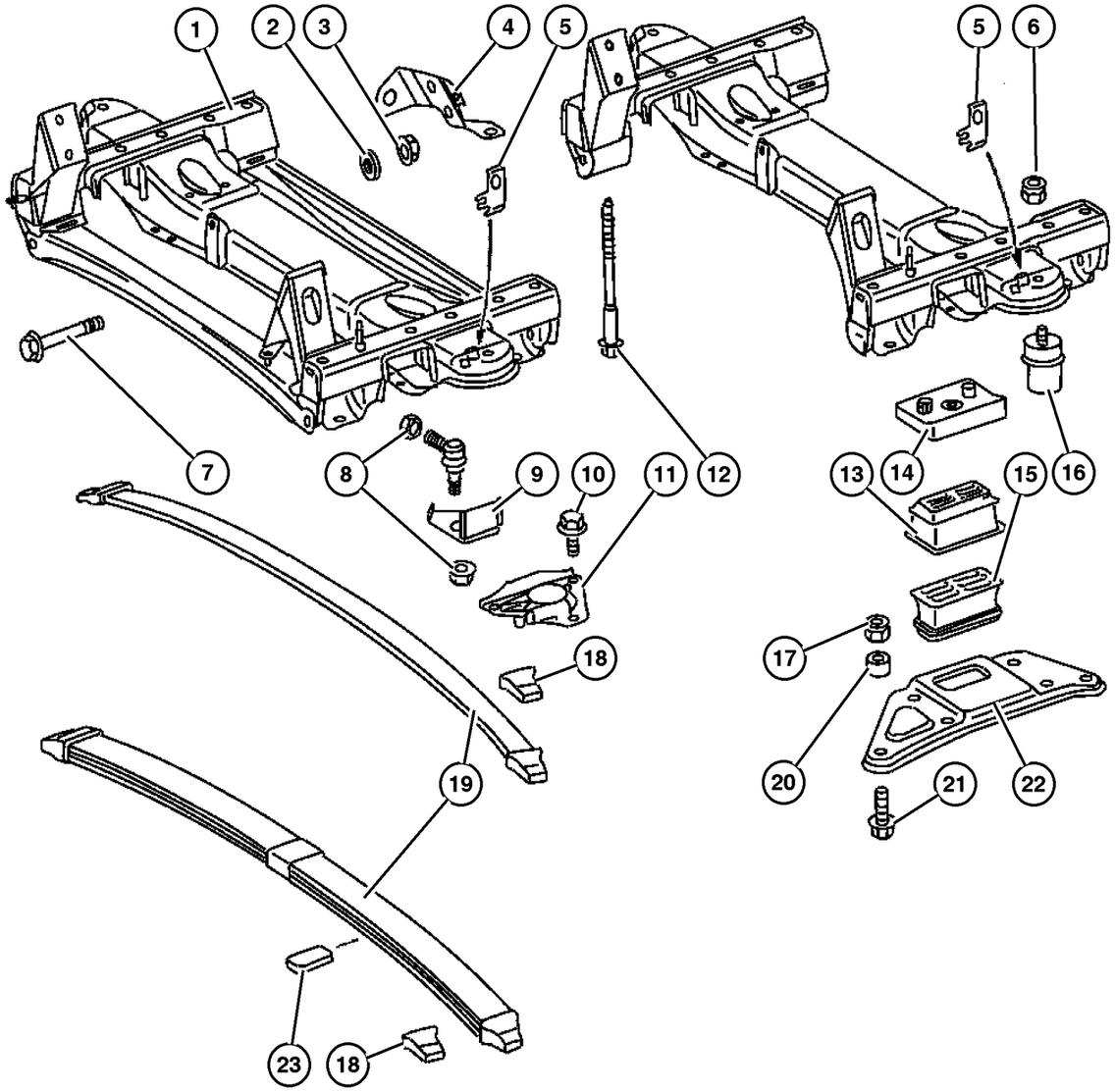

ITEM	PART NUMBER	QTY	LINE	SERIES	BODY	ENGINE	TRANS	TRIM	DESCRIPTION
	5139 190AB	2							To Frame with SV#500323/03
	5139 558AA	2							To Frame with SV#500323/02
14									SHIM, Spring Seat
	5139 554AA	1							Right
	5139 552AA	1							Left
15									SEAT, Spring
	5139 189AA	1							Right
	5139 188AA	1							Left
16	5139 555AA	2							BUMPER, Suspension Jounce
17									NUT
	6104 717AA	8	2, 6	L	01, 02, 06				M10x1.5
		8	2, 6	L	11, 12, 14, 15, 16				M10x1.5
		8	2, 6	L	51, 52, 54, 55, 56				M10x1.5
		8	3, 7	L	02, 06				M10x1.5
		8	3, 7	L	12, 15, 16				M10x1.5
	6104 718AA	8	2, 6	L	01, 02, 06				M12x1.5
		8	2, 6	L	11, 12, 14, 15, 16				M12x1.5
		8	2, 6	L	51, 52, 54, 55, 56				M12x1.5
		8	3, 7	L	02, 06				M12x1.5
		8	3, 7	L	12, 15, 16				M12x1.5
18	5139 556AA	2							SEAT, Spring
19	5139 112AA	1							SPRING, Front Leaf
20	5139 737AA	4							BUSHING, Spring
21	6104 233AA	4							BOLT, Hex Head
22									PLATE, Suspension
	5139 187AA	1							Right
	5139 186AA	1							Left
23									SHIM, (NOT SERVICED) (Not Serviced)

Refer to Model Legend Information Bookmark

AR = Use as required - = Non illustrated part # = New this model year

March 3, 2006

« RETURN TO GROUP INDEX

Group – 003
Rear Axle

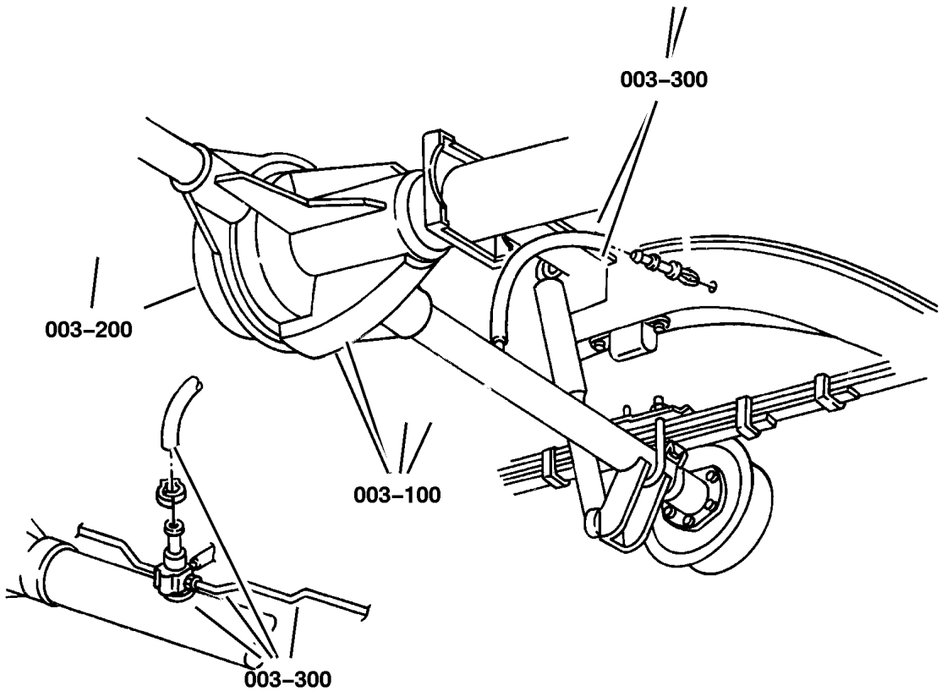

003–100 Rear Axle	003–200 Differential and Housing	003–300 Rear Axle Vent	
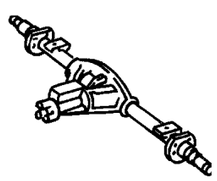	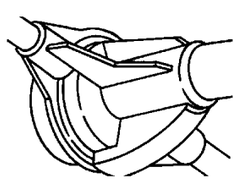	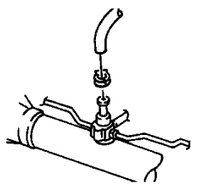	

GROUP 3 - Rear Axle

Illustration Title — Group-Fig. No.

Rear Axle
Differential Assembly,Rear . . . . . Fig. 003-110

Differential and Housing
Internal Differential Parts,Rear . . . . . Fig. 003-210
Differential Housing,Rear . . . . . Fig. 003-220
Axle Shaft and Wheel Bearings,Single Rear Wheels . . . . . Fig. 003-230
Axle Shaft and Wheel Bearings,Dual Rear Wheels . . . . . Fig. 003-240

Rear Axle Vent
Vent,Rear Axle . . . . . Fig. 003-310

Differential Assembly,Rear
Figure 003-110

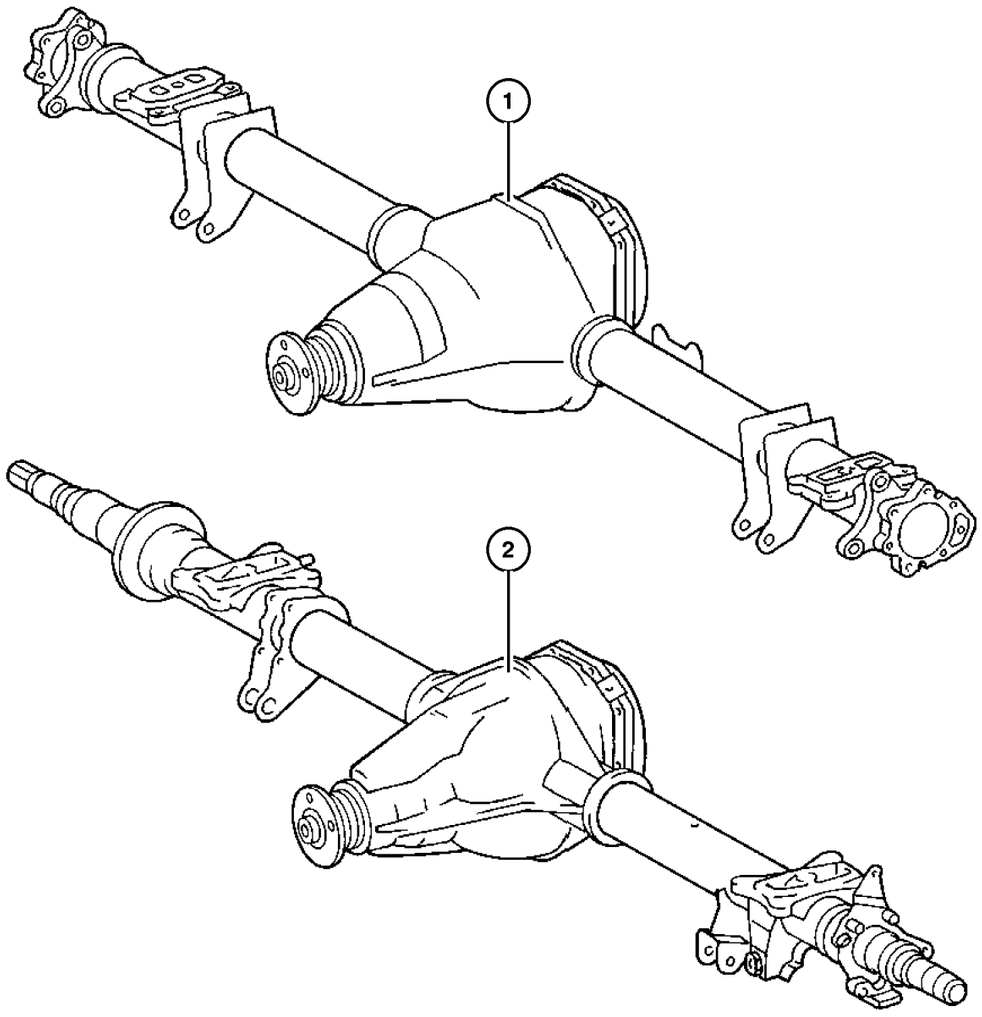

ITEM	PART NUMBER	QTY	LINE	SERIES	BODY	ENGINE	TRANS	TRIM	DESCRIPTION
Note: Sales Codes:									
DRW means Dual Rear Wheels									
SRW means Single Rear Wheels									
[BGK]=4-WHEEL ANTI-LOCK BRAKES									
[DME]=Axle Ratio - 3.72									
[DMF]=Axle Ratio - 4.11									
[4JR]=Dual Rear Wheel Chassis With/16" TIRES									
1									AXLE, Service Rear
	5137 591AA	1	2, 6						[DME] SRW
	5137 755AA	1	2, 6	L					[DMF] SRW
2									AXLE, Service Rear
	5135 823AA	1	3, 7	L	12, 15, 16				[DME] With 15 Inch DRW
	5135 928AA	1	3, 7	L					[DMF] With 15 Inch DRW
	5140 856AB	1	3, 7	L	02, 06				[DME,4JR] With 16 Inch DRW
		1	3, 7	L	12, 15, 16				[DME,4JR] With 16 Inch DRW
	5140 855AB	1	3, 7	L	02, 06				[DMF,4JR] With 16 Inch DRW
		1	3, 7	L	12, 15, 16				[DMF,4JR] With 16 Inch DRW

Refer to Model Legend Information Bookmark

AR = Use as required - = Non illustrated part # = New this model year

March 3, 2006

« RETURN TO GROUP INDEX

Internal Differential Parts,Rear
Figure 003-210

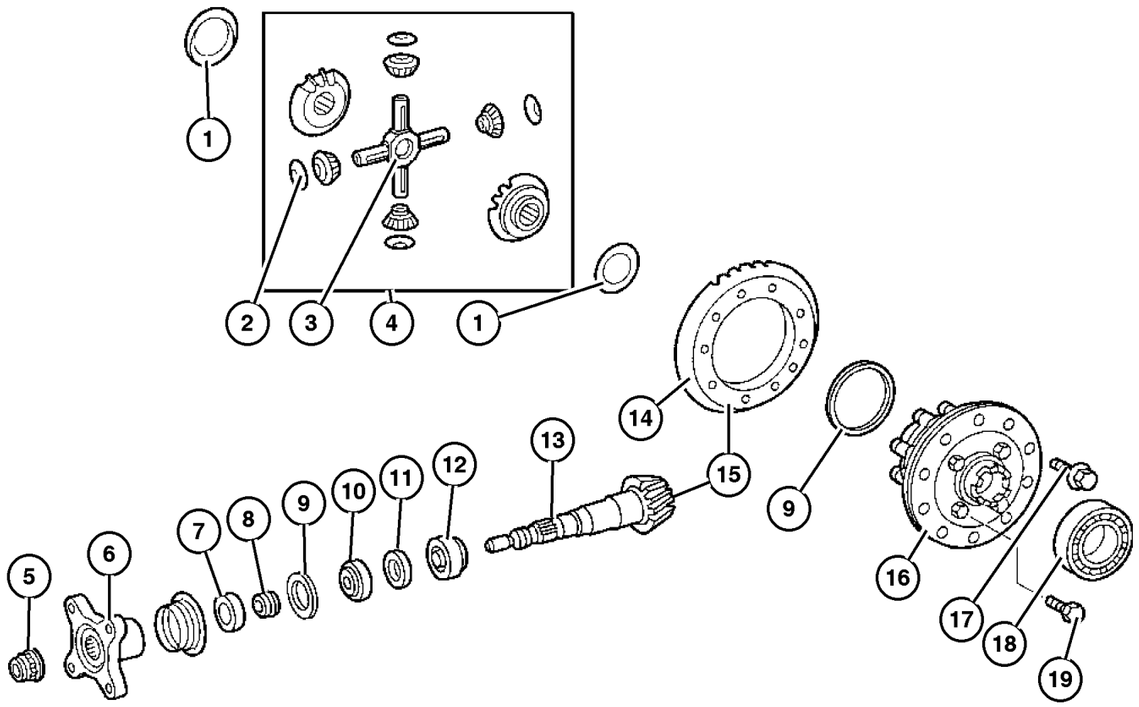

ITEM	PART NUMBER	QTY	LINE	SERIES	BODY	ENGINE	TRANS	TRIM	DESCRIPTION
Note:Sales Codes									
[DME]=3.72 Axle Ratio									
[DMF]=4.10 Axle Ratio									
1									WASHER, Side Gear Thrust
	5136 792AA	AR	3, 7	L					[1.30mm Steel]
	5136 810AA	AR	3, 7	L					[1.30mm Brass]
	5136 820AA	AR	3, 7	L					[1.40mm Steel]
	5136 819AA	AR	2, 3, 6, 7	L					[1.40mm Brass]
	5136 822AA	AR	3, 7	L					[1.50mm Steel]
	5136 823AA	AR	3, 7	L					[1.50mm Brass]
	5136 826AA	AR	3, 7	L					[1.60mm Steel]
	5136 827AA	AR	3, 7	L					[1.60mm Brass]
	5136 829AA	AR	3, 7	L					[1.70mm Steel]
	5136 830AA	AR	3, 7	L					[1.70mm Brass]
	5136 834AA	AR	3, 7	L					[1.80mm Steel]
	5136 835AA	AR	3, 7	L					[1.80mm Brass]
	5136 841AA	AR	3, 7	L					[1.90mm Steel]
2									WASHER, Pinion Gear
	5136 148AA	4	2, 6						Thrust
		4	3, 7						Thrust
3	5136 150AA	1	3, 7						SHAFT, Differential Pinion
4	5137 602AA	1	2, 3, 6, 7						GEAR PACKAGE, Differential
5									NUT, Pinion Yoke
	5103 957AA	1							Up To Axle L538154 or X004694
	5103 958AA	1							From Axle L538155 or X004695
6	5134 541AA	1		L					FLANGE, Driveshaft Yoke
7	5103 966AA	1		L					RING, pinion flange
8	5134 540AA	1		L					SPACER, Drive Pinion Bearing
9									SHIM, Axle
	5134 415AA	1	2, 3, 6, 7						[4.90mm]
	5134 416AA	1	2, 3, 6, 7						[4.92mm]
	5134 417AA	1	2, 3, 6, 7						[4.94mm]
	5134 418AB	1	2, 3, 6, 7						[4.96mm]
	5134 419AA	1	2, 3, 6, 7						[5.00mm]
	5134 420AA	1	2, 3, 6, 7						[5.02mm]
	5134 421AA	1	2, 3, 6, 7						[5.04mm]
	5134 422AB	1	2, 3, 6, 7						[5.06mm]
	5134 423AA	1	2, 3, 6, 7						[5.12mm]
	5134 425AA	1	2, 3, 6, 7	L					[5.20mm]
	5134 427AA	1	2, 3, 6, 7	L					[5.24mm]
	5134 428AA	1	2, 3, 6, 7	L					[5.28mm]
	5134 429AA	1	2, 3, 6, 7	L					[5.32mm]
	5134 430AA	1	2, 3, 6, 7	L					[5.36mm]
	5134 431AA	1	2, 3, 6, 7	L					[5.40mm]
	5134 432AA	1	2, 3, 6, 7	L					[5.50mm]

Refer to Model Legend Information Bookmark

Internal Differential Parts,Rear
Figure 003-210

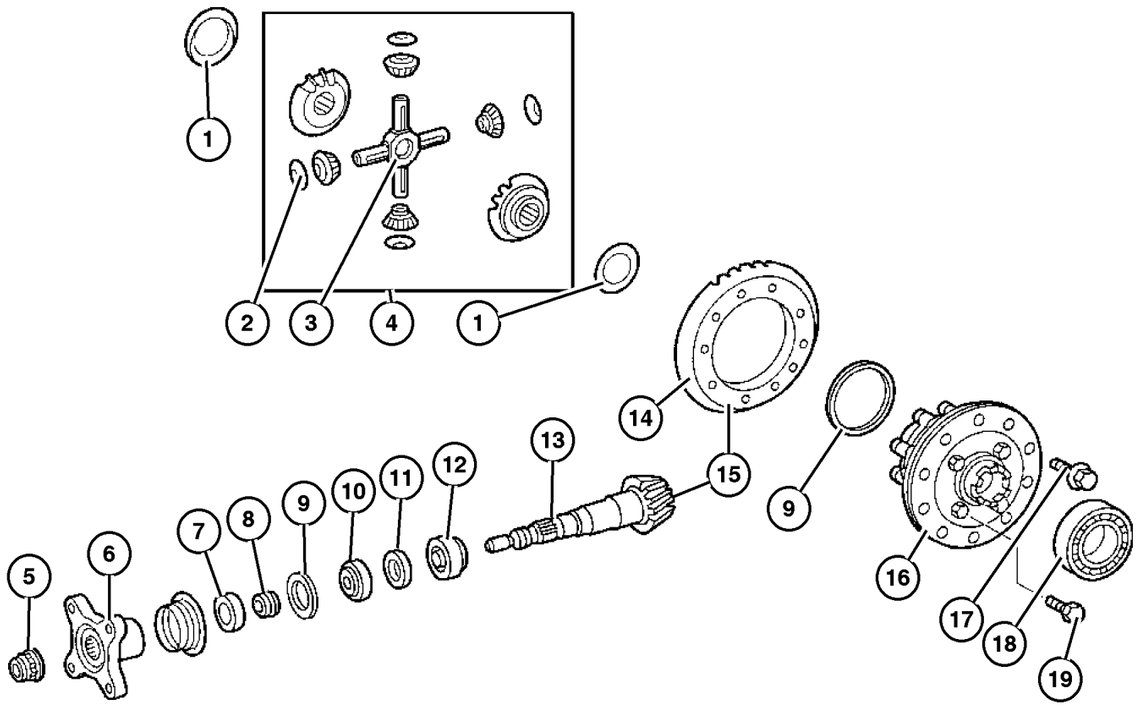

ITEM	PART NUMBER	QTY	LINE	SERIES	BODY	ENGINE	TRANS	TRIM	DESCRIPTION
	5134 433AA	1	2, 3, 6, 7	L					[5.60mm]
	5134 434AA	1	2, 3, 6, 7	L					[5.72mm]
	5134 435AA	1	2, 3, 6, 7	L					[5.78mm]
	5134 436AA	1	2, 3, 6, 7	L					[5.80mm]
	5134 437AA	1	2, 3, 6, 7	L					[5.84mm]
	5134 438AA	1	2, 3, 6, 7	L					[5.88mm]
	5134 439AA	1	2, 3, 6, 7	L					[5.92mm]
	5134 440AA	1	2, 3, 6, 7						[5.96mm]
	5134 441AA	1	2, 3, 6, 7	L					[6.00mm]
	5134 466AB	1	2, 3, 6, 7	L					[6.10mm]
	5134 467AA	1	2, 3, 6, 7	L					[6.20mm]
	5134 468AB	1	2, 3, 6, 7	L					[6.30mm]
	5134 469AA	1	2, 3, 6, 7	L					[6.38mm]
10	5136 772AA	1		L					BEARING, Front
11	5103 900AA	1		L					SEAL, Drive Pinion
12	5134 442AA	1		L					BEARING, Drive Pinion, Rear
13	5136 773AA	1	2, 3, 6, 7	L					PINION, Differential, [DME]
14	5136 774AA	1		L					GEAR, Differential Ring, [DME]
15									GEAR KIT, Ring And Pinion
	5136 156AA	1	2, 3, 6, 7	L	11, 12, 14, 15, 16				[DMF]
		1	2, 3, 6, 7	L	51, 52, 54, 55, 56				[DMF]
16									CASE, Differential
	5137 618AA	1	2, 3, 6, 7						[DME]
	5136 172AA	1	3, 7		11, 12, 14, 15, 16				[DMF]
17	5103 849AA	10	2, 3, 6, 7	L					BOLT, Ring Gear, Mounting
18	5097 700AA	1	2, 3, 6, 7						BEARING, Differential
19	5136 178AA	8							SCREW, Differential, Differential Case Half, Mounting

Refer to Model Legend Information Bookmark

Differential Housing,Rear
Figure 003-220

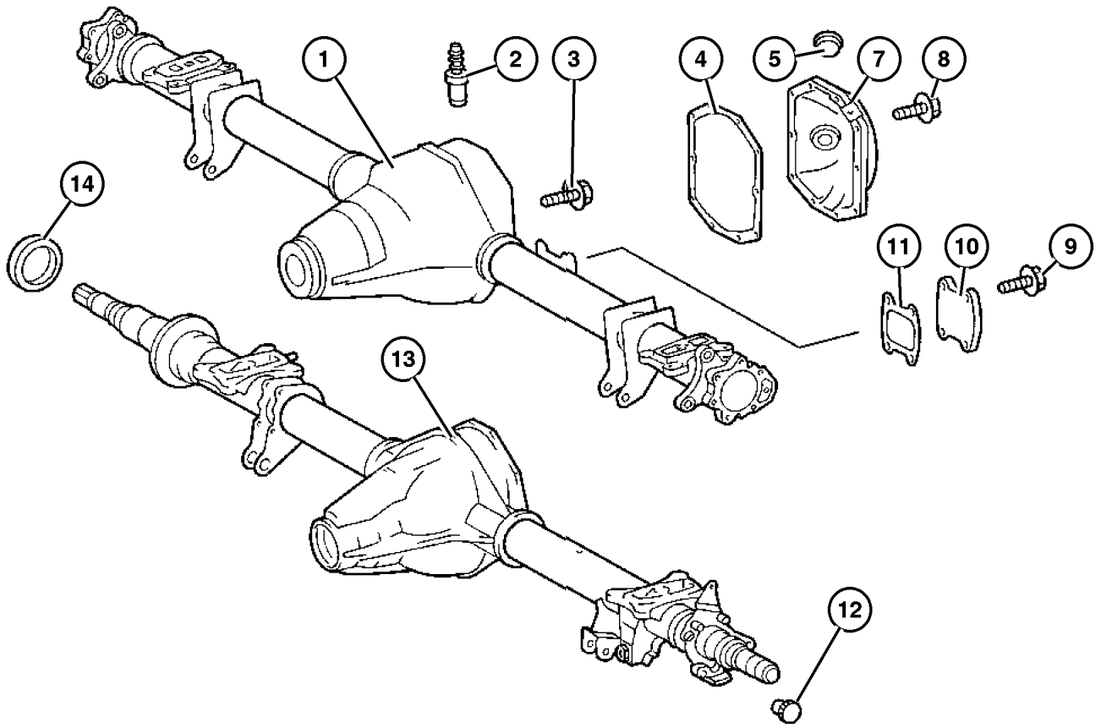

ITEM	PART NUMBER	QTY	LINE	SERIES	BODY	ENGINE	TRANS	TRIM	DESCRIPTION
1									HOUSING, Rear Axle, Order Axle Assembly, (NOT SERVICED) (Not Serviced)
2									VENT, Axle
	5103 948AA	1	2, 6	L	01, 02, 06				
		1	2, 6	L	11, 12, 14, 15, 16				
		1	2, 6	L	51, 52, 54, 55, 56				
		1	3, 7	L	02, 06				
		1	3, 7	L	12, 15, 16				
3									BOLT, Hex Head
	6104 225AA	4	2, 6	L	01, 02, 06				Carrier Bearing Cap, Mounting
		4	2, 6	L	11, 12, 14, 15, 16				Carrier Bearing Cap, Mounting
		4	2, 6	L	51, 52, 54, 55, 56				Carrier Bearing Cap, Mounting
		4	3, 7	L	02, 06				Carrier Bearing Cap, Mounting
		4	3, 7	L	12, 15, 16				Carrier Bearing Cap, Mounting
4	5103 574AA	1	2, 3, 6, 7						GASKET, Differential Cover, Mounting
5	5097 712AA	1	2, 3, 6, 7						PLUG, Oil Drain
-6	5134 372AA-	1	2, 3, 6, 7						GASKET, Oil Drain Plug, Mounting
7									COVER, Differential
	5103 953AA	1	2, 6	L	01, 02, 06				
		1	2, 6	L	11, 12, 14, 15, 16				
		1	2, 6	L	51, 52, 54, 55, 56				
		1	3, 7	L	02, 06				
		1	3, 7	L	12, 15, 16				
8	5134 371AA	10	2, 3, 6, 7						SCREW AND WASHER, Differential Cover, Mounting
9									SCREW

Refer to Model Legend Information Bookmark

AR = Use as required - = Non illustrated part # = New this model year

March 3, 2006

« RETURN TO GROUP INDEX

»

Differential Housing,Rear
Figure 003-220

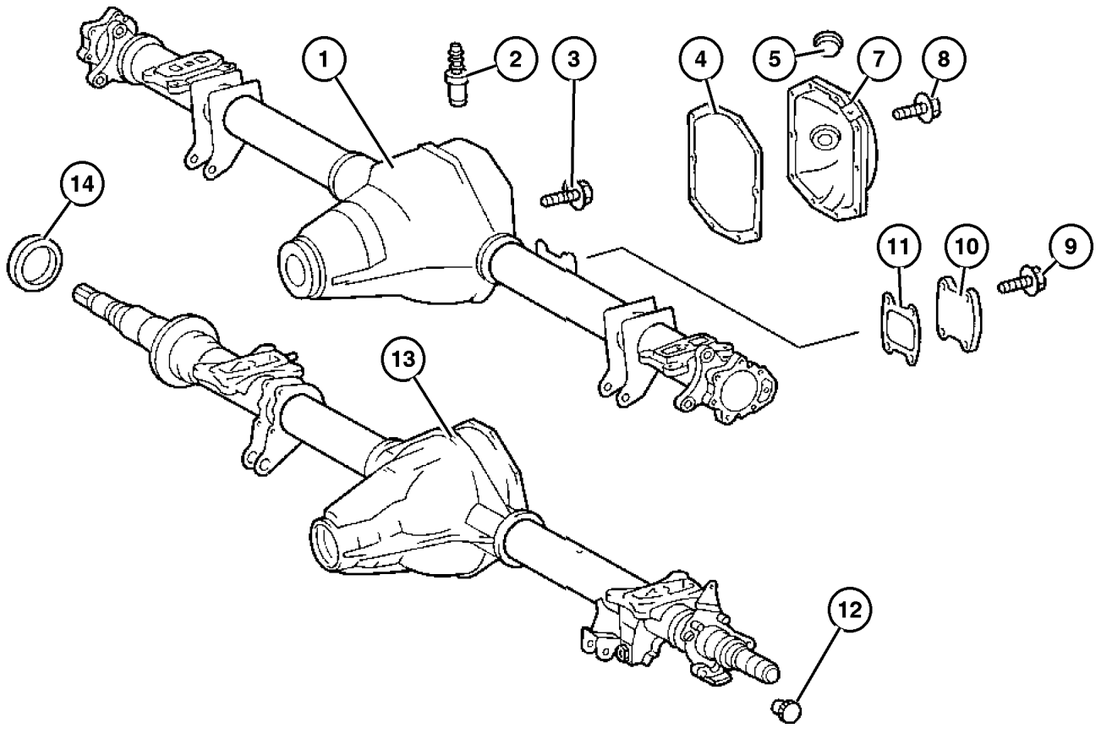

ITEM	PART NUMBER	QTY	LINE	SERIES	BODY	ENGINE	TRANS	TRIM	DESCRIPTION
	6104 195AA	4	2, 6	L	01, 02, 06				Axle Housing Cover, Mounting
		4	2, 6	L	11, 12, 14, 15, 16				Axle Housing Cover, Mounting
		4	2, 6	L	51, 52, 54, 55, 56				Axle Housing Cover, Mounting
10									COVER
	5134 668AA	1	2, 6	L	01, 02, 06				Axle Housing
		1	2, 6	L	11, 12, 14, 15, 16				Axle Housing
		1	2, 6	L	51, 52, 54, 55, 56				Axle Housing
11									GASKET
	5134 669AA	1	2, 6	L	01, 02, 06				Axle Housing Cover, Mounting
		1	2, 6	L	11, 12, 14, 15, 16				Axle Housing Cover, Mounting
		1	2, 6	L	51, 52, 54, 55, 56				Axle Housing Cover, Mounting
12									PLUG
	5133 367AA	1	2, 6	L	01, 02, 06				To Lock Holes for ABS
		1	2, 6	L	11, 12, 14, 15, 16				To Lock Holes for ABS
		1	2, 6	L	51, 52, 54, 55, 56				To Lock Holes for ABS
		1	3, 7	L	02, 06				To Lock Holes for ABS
		1	3, 7	L	12, 15, 16				To Lock Holes for ABS
13									HOUSING, Rear Axle
	5139 133AA	1	3, 7	L	02, 06				Dual Rear Wheels
		1	3, 7	L	12, 15, 16				Dual Rear Wheels
14									THRUST RING
	5104 027AA	1	3, 7	L	02, 06				Right
	5134 665AA	1	3, 7	L	02, 06				Left

Refer to Model Legend Information Bookmark

AR = Use as required - = Non illustrated part # = New this model year

March 3, 2006

« RETURN TO GROUP INDEX

Differential Housing,Rear
Figure 003-220

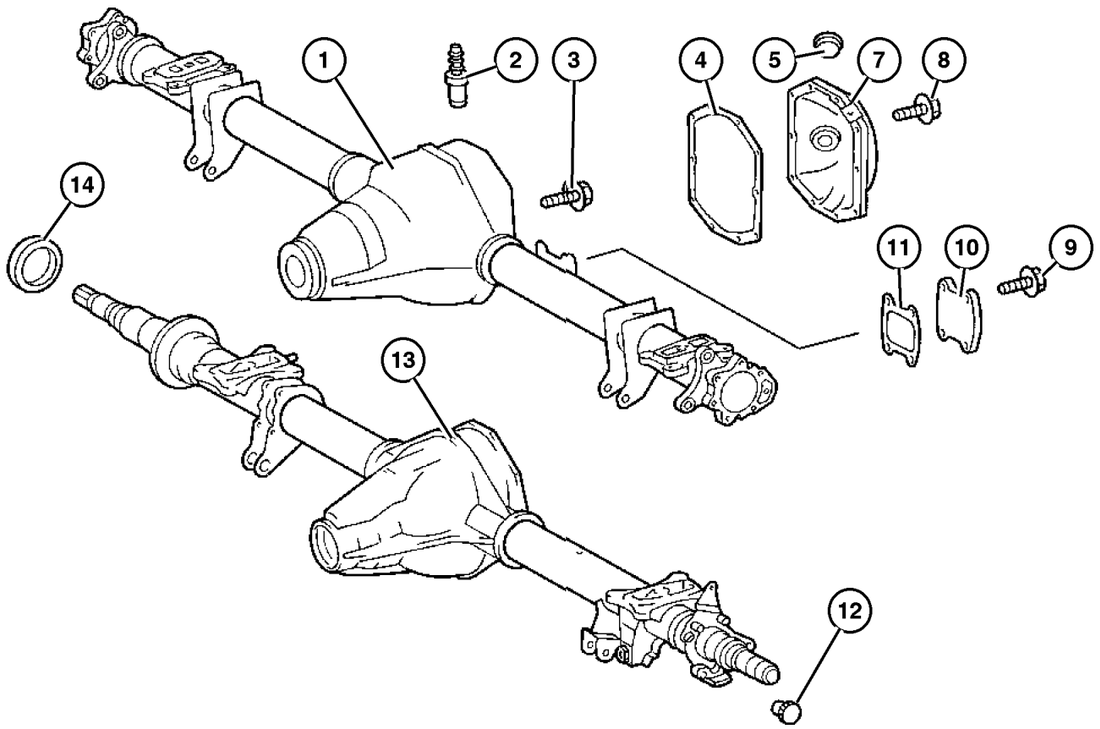

ITEM	PART NUMBER	QTY	LINE	SERIES	BODY	ENGINE	TRANS	TRIM	DESCRIPTION
	5104 027AA	1	3, 7	L	12, 15, 16				Right
	5134 665AA	1	3, 7	L	12, 15, 16				Left

Refer to Model Legend Information Bookmark

Axle Shaft and Wheel Bearings,Single Rear Wheels
Figure 003-230

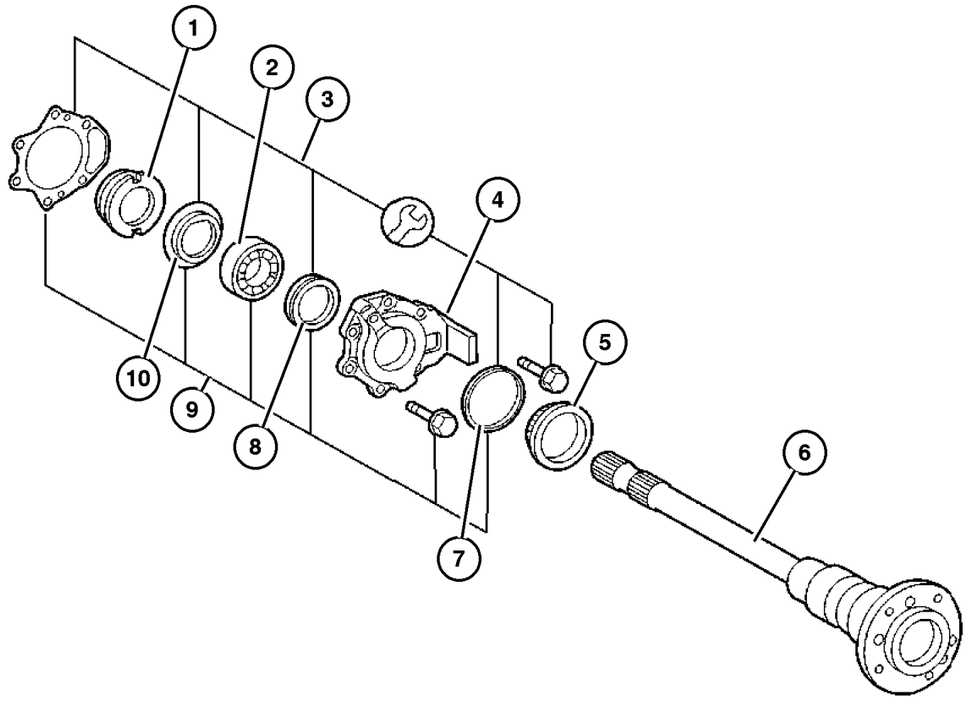

ITEM	PART NUMBER	QTY	LINE	SERIES	BODY	ENGINE	TRANS	TRIM	DESCRIPTION
1									NUT, axle shaft
	5134 634AA	1	2, 6	L					Right
	5134 635AA	1	2, 6	L					Left
2	5103 883AB	2	2, 6	L					BEARING, Wheel
3	5104 559AA	2	2, 6	L					SEAL KIT, axle shaft
4									COVER, axle bearing
	5134 638AB	1	2, 6	L					Right
	5134 639AB	1	2, 6	L					Left
5	5134 641AA	2	2, 6	L					TONE RING, Sensor
6									SHAFT, Axle
	5134 660AA	1	2, 6	L					Right
	5134 661AA	1	2, 6	L					Left
7	5104 566AA	2	2, 6						SEAL, Rear Axle Flange
8	5139 760AA	2	2, 6						SEAL, Rear Axle Flange
9	5103 601AA	2	2, 6	L					BEARING KIT, axle shaft
10	5139 738AA	2	2, 6						LOCK, Hub Nut

Refer to Model Legend Information Bookmark

AR = Use as required - = Non illustrated part # = New this model year

March 3, 2006

RETURN TO GROUP INDEX

Axle Shaft and Wheel Bearings,Dual Rear Wheels
Figure 003-240

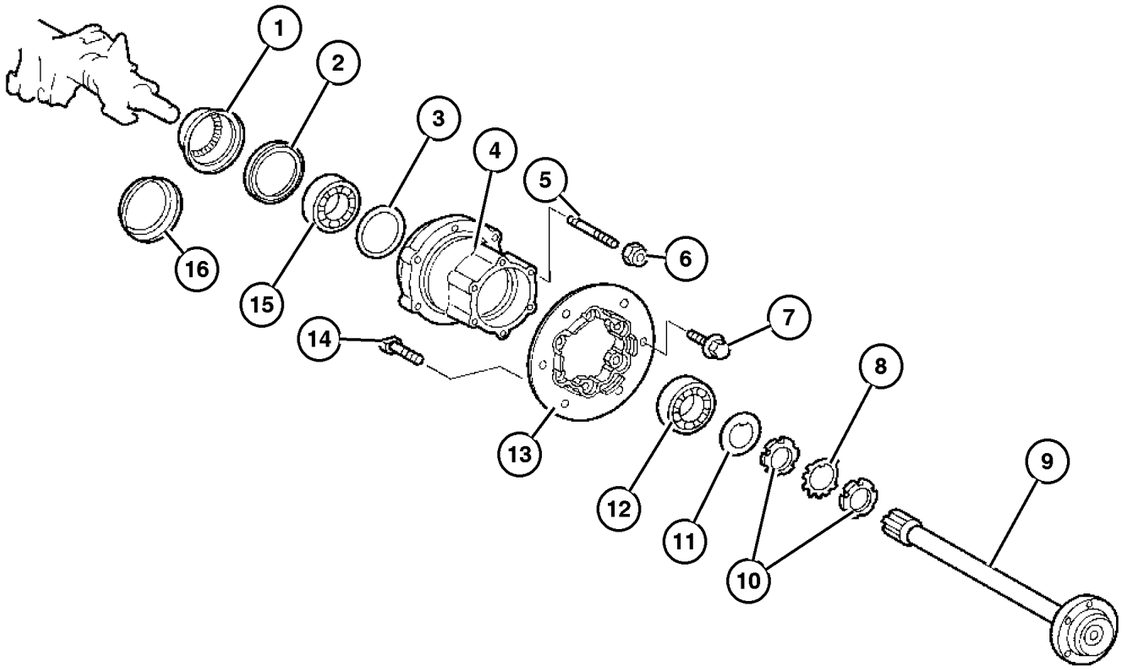

ITEM	PART NUMBER	QTY	LINE	SERIES	BODY	ENGINE	TRANS	TRIM	DESCRIPTION
1	5134 711AA	2	3, 7	L					TONE RING, Sensor, ABS
2	5103 566AA	2	3, 7	L	12, 15, 16				SEAL, Wheel Bearing
3	5134 706AA	2	3, 7	L					SPACER
4	5104 580AA	2	3, 7	L					HUB, Wheel
5	5134 714AA	12	3, 7	L					STUD, Hub, Axle, Mounting
6	5134 715AA	12	3, 7	L					NUT, Hex Lock, Axle, Mounting
7	6104 258AA	12	3, 7	L					SCREW, Hex Flange Head
8	5103 578AA	2	3, 7	L					LOCK, Bearing Adjusting Nut
9	5166 553AA	2	3, 7	L					SHAFT, Axle
10	5134 720AA	2	3, 7	L					NUT, Bearing Adjusting
11	5134 719AA	2	3, 7						SPACER
12	5103 547AA	2	3, 7	L					BEARING, Wheel, Outer
13	5134 718AB	2	3, 7	L					FLANGE, Axle Output
14	5103 938AA	12	3, 7	L					STUD, Wheel
15	5103 562AA	2	3, 7	L					BEARING, Wheel, Inner
16	5134 709AA	2	3, 7	L					SLINGER, Oil

Refer to Model Legend Information Bookmark

Vent,Rear Axle
Figure 003-310

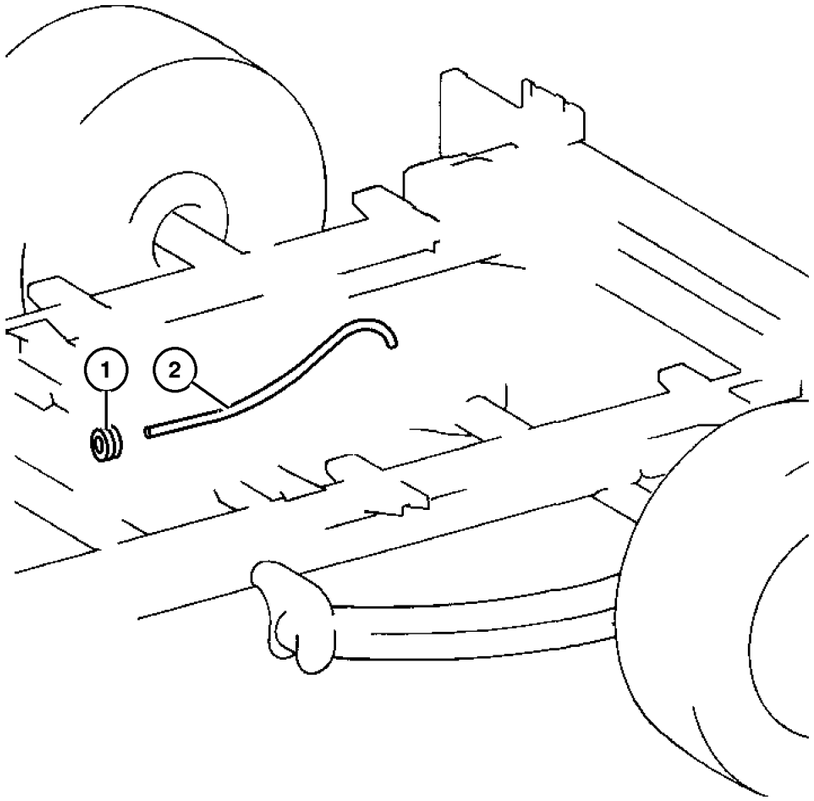

ITEM	PART NUMBER	QTY	LINE	SERIES	BODY	ENGINE	TRANS	TRIM	DESCRIPTION
1									GROMMET
	5125 930AA	1	2, 6	L	01, 02, 06				
		1	2, 6	L	11, 12, 14, 15, 16				
		1	2, 6	L	51, 52, 54, 55, 56				
		1	3, 7	L	02, 06				
		1	3, 7	L	12, 15, 16				
2									HOSE, Axle Vent
	5104 076AA	1	2, 6	L	01, 02, 06				
		1	2, 6	L	11, 12, 14, 15, 16				
		1	2, 6	L	51, 52, 54, 55, 56				
		1	3, 7	L	02, 06				
		1	3, 7	L	12, 15, 16				

Refer to Model Legend Information Bookmark

AR = Use as required - = Non illustrated part # = New this model year

March 3, 2006

RETURN TO GROUP INDEX

Group – 004
Parking Brake

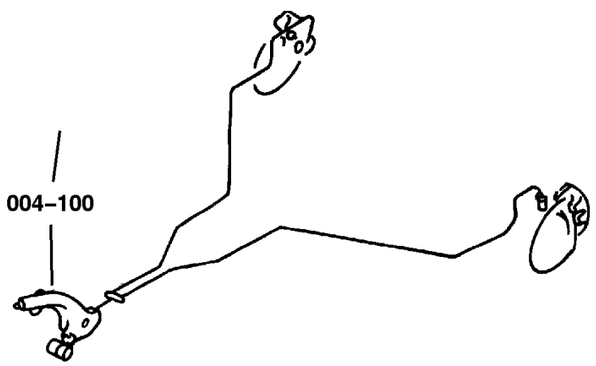

004–100 **Parking Brake Lever and Cables** 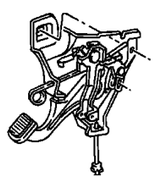			

GROUP 4 - Parking Brake

Illustration Title	Group-Fig. No.
Parking Brake Lever and Cables	
Parking Brake Lever Assembly	Fig. 004-110
Parking Brake Assembly	Fig. 004-120

Parking Brake Lever Assembly
Figure 004-110

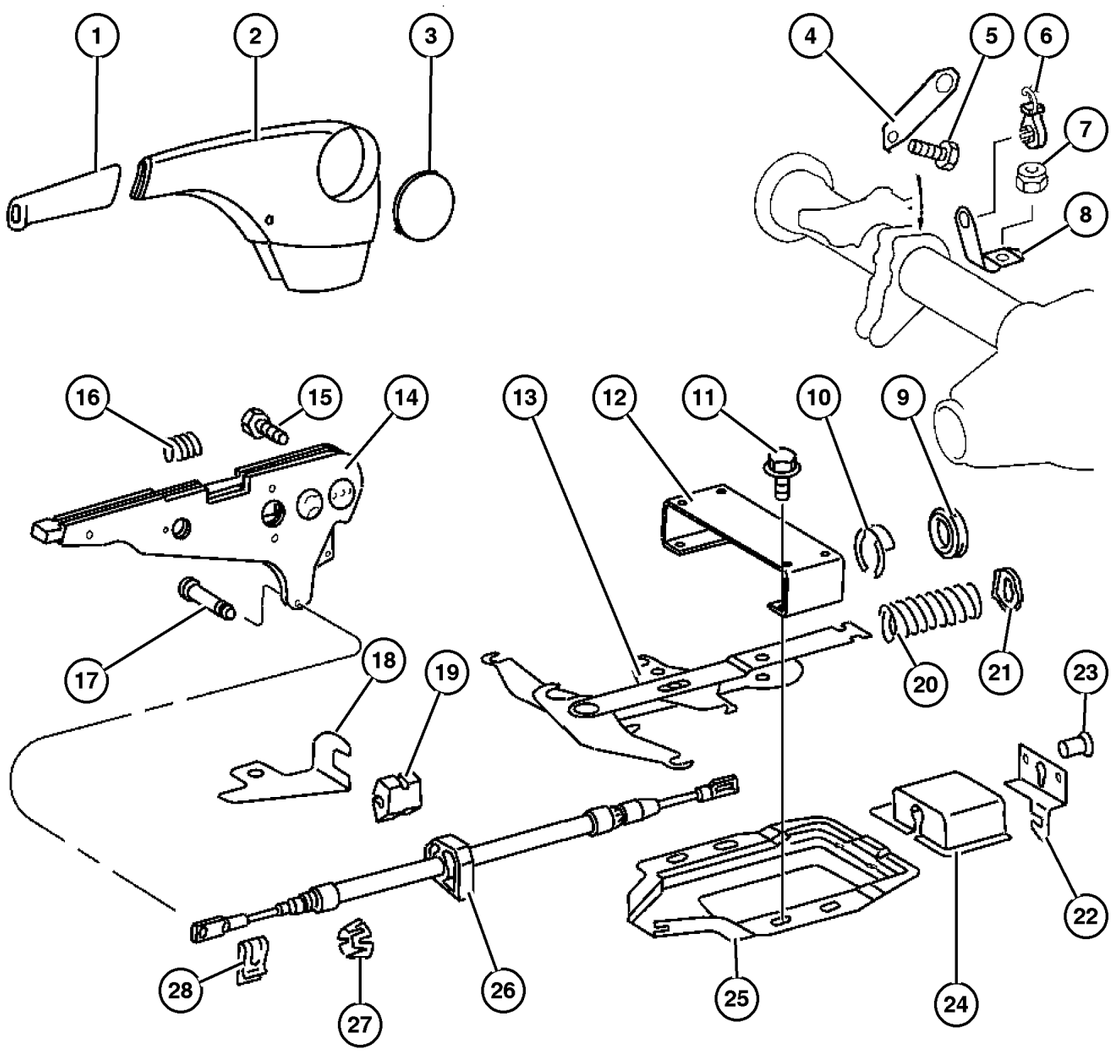

ITEM	PART NUMBER	QTY	LINE	SERIES	BODY	ENGINE	TRANS	TRIM	DESCRIPTION
1									HANDLE, Parking Brake
	5119 259AA	1	2, 6						
		1	3, 7		02, 06				
		1	3, 7		12, 15, 16				
2									COVER, Parking Brake Housing
	5119 264AA	1	2, 6		01, 02, 06				
		1	2, 6		11, 12, 14, 15, 16				
		1	2, 6		51, 52, 54, 55, 56				
		1	3, 7		02, 06				
		1	3, 7		12, 15, 16				
3									COVER, Parking Brake
	5104 086AA	1	2, 6		01, 02, 06				
		1	2, 6		11, 12, 14, 15, 16				
		1	2, 6		51, 52, 54, 55, 56				
		1	3, 7		02, 06				
		1	3, 7		12, 15, 16				
4									BRACKET
	5119 277AA	1	2, 6		01, 02, 06				Right
	5119 274AA	1	2, 6		01, 02, 06				Left
	5119 277AA	1	2, 6		11, 12, 14, 15, 16				Right
	5119 274AA	1	2, 6		11, 12, 14, 15, 16				Left
	5119 277AA	1	2, 6		51, 52, 54, 55, 56				Right

Refer to Model Legend Information Bookmark

AR = Use as required - = Non illustrated part # = New this model year

March 3, 2006

« RETURN TO GROUP INDEX

»

Parking Brake Lever Assembly
Figure 004-110

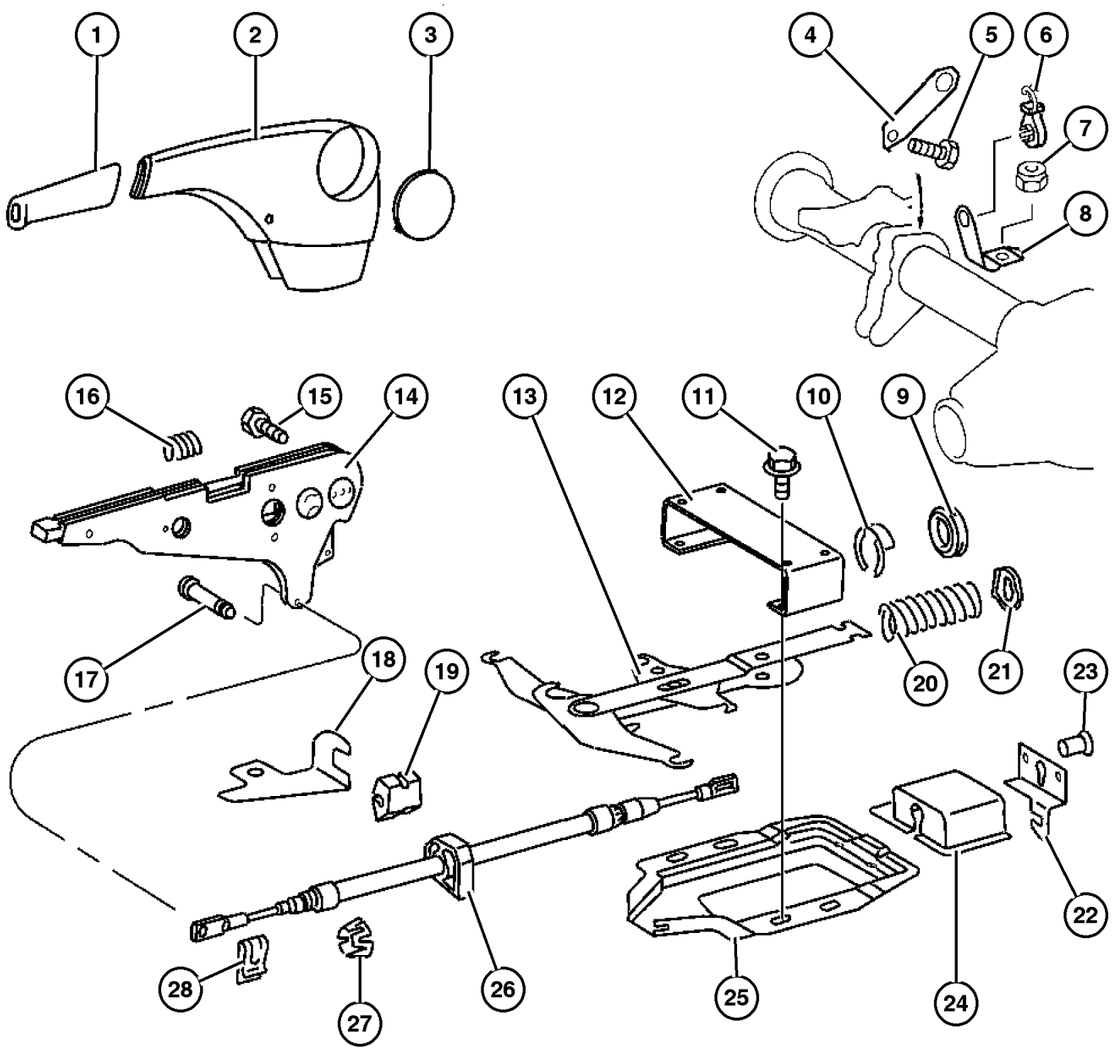

ITEM	PART NUMBER	QTY	LINE	SERIES	BODY	ENGINE	TRANS	TRIM	DESCRIPTION
	5119 274AA	1	2, 6		51, 52, 54, 55, 56				Left
	5136 069AA	1	3, 7		02, 06				Right
	5136 070AA	1	3, 7		02, 06				Left
	5136 069AA	1	3, 7		12, 15, 16				Right
	5136 070AA	1	3, 7		12, 15, 16				Left
5									BOLT
	5104 655AA	2	2, 6		01, 02, 06				
		2	2, 6		11, 12, 14, 15, 16				
		2	2, 6		51, 52, 54, 55, 56				
		2	3, 7		02, 06				
		2	3, 7		12, 15, 16				
6									CLIP, Parking Brake Cable
	5119 283AA	4	2, 6		01, 02, 06				
		4	2, 6		11, 12, 14, 15, 16				
		4	2, 6		51, 52, 54, 55, 56				
		6	3, 7		02, 06				
		6	3, 7		12, 15, 16				
7									NUT, Hex, M6
	5127 449AA	2	2, 6		01, 02, 06				
		2	2, 6		11, 12, 14, 15, 16				
		2	2, 6		51, 52, 54, 55, 56				
		2	3, 7		02, 06				
		2	3, 7		12, 15, 16				

Refer to Model Legend Information Bookmark

AR = Use as required - = Non illustrated part # = New this model year

March 3, 2006

« RETURN TO GROUP INDEX

Parking Brake Lever Assembly
Figure 004-110

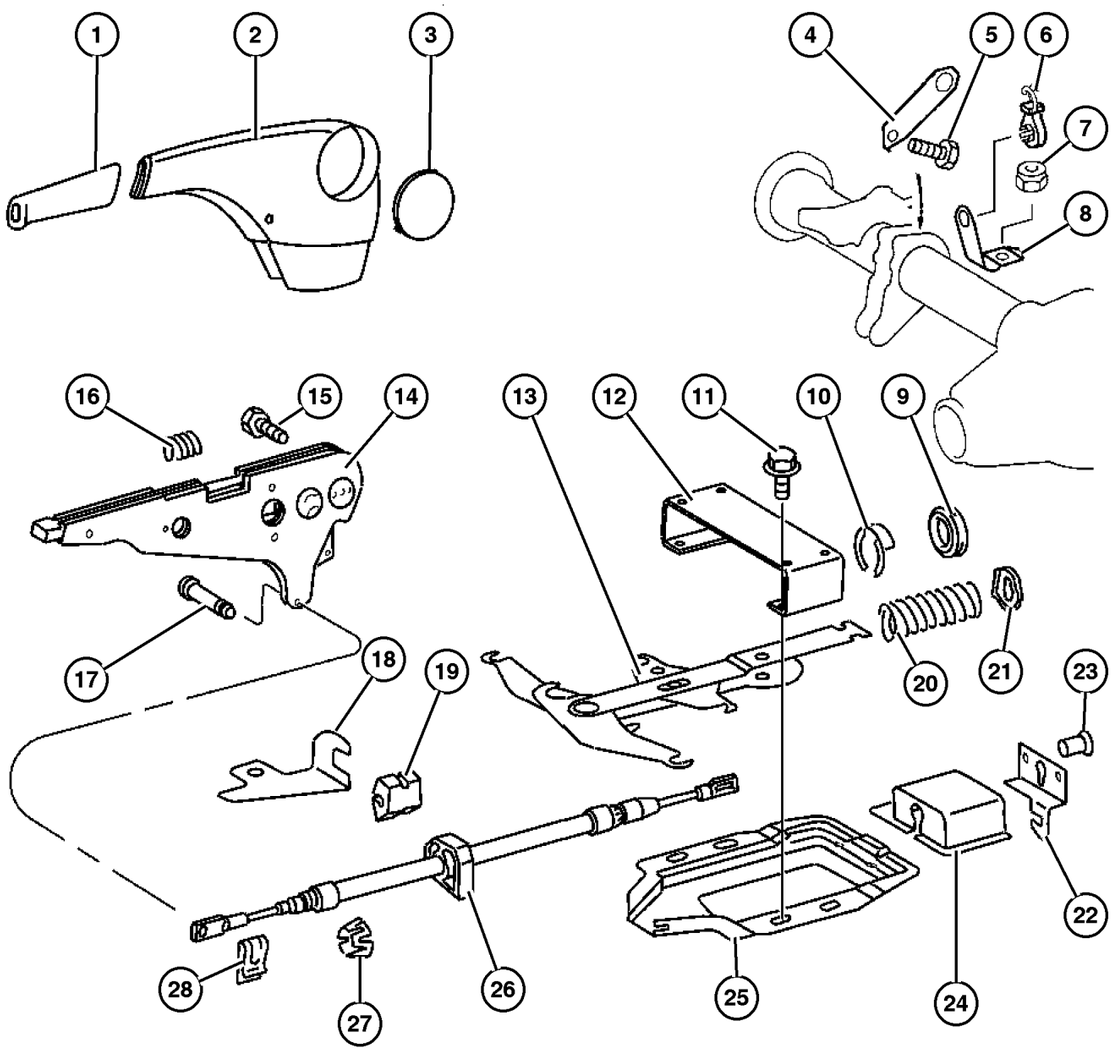

ITEM	PART NUMBER	QTY	LINE	SERIES	BODY	ENGINE	TRANS	TRIM	DESCRIPTION
8									BRACKET, Parking Brake Cable Guide
	5119 273AA	1	2, 6		01, 02, 06				Right
	5119 270AA	1	2, 6		01, 02, 06				Left
	5119 273AA	1	2, 6		11, 12, 14, 15, 16				Right
	5119 270AA	1	2, 6		11, 12, 14, 15, 16				Left
	5119 273AA	1	2, 6		51, 52, 54, 55, 56				Right
	5119 270AA	1	2, 6		51, 52, 54, 55, 56				Left
9									GROMMET, Parking Brake Cable
	5125 927AA	1	2, 6		01, 02, 06				
		1	2, 6		11, 12, 14, 15, 16				
		1	2, 6		51, 52, 54, 55, 56				
		1	3, 7		02, 06				
		1	3, 7		12, 15, 16				
10									CLIP, Spring
	5125 586AA	1	2, 6		01, 02, 06				
		1	2, 6		11, 12, 14, 15, 16				
		1	2, 6		51, 52, 54, 55, 56				
		1	3, 7		02, 06				
		1	3, 7		12, 15, 16				
11									SCREW
	5126 264AA	4	3, 7		02, 06				

Refer to Model Legend Information Bookmark

AR = Use as required - = Non illustrated part # = New this model year

March 3, 2006

« RETURN TO GROUP INDEX

Parking Brake Lever Assembly
Figure 004-110

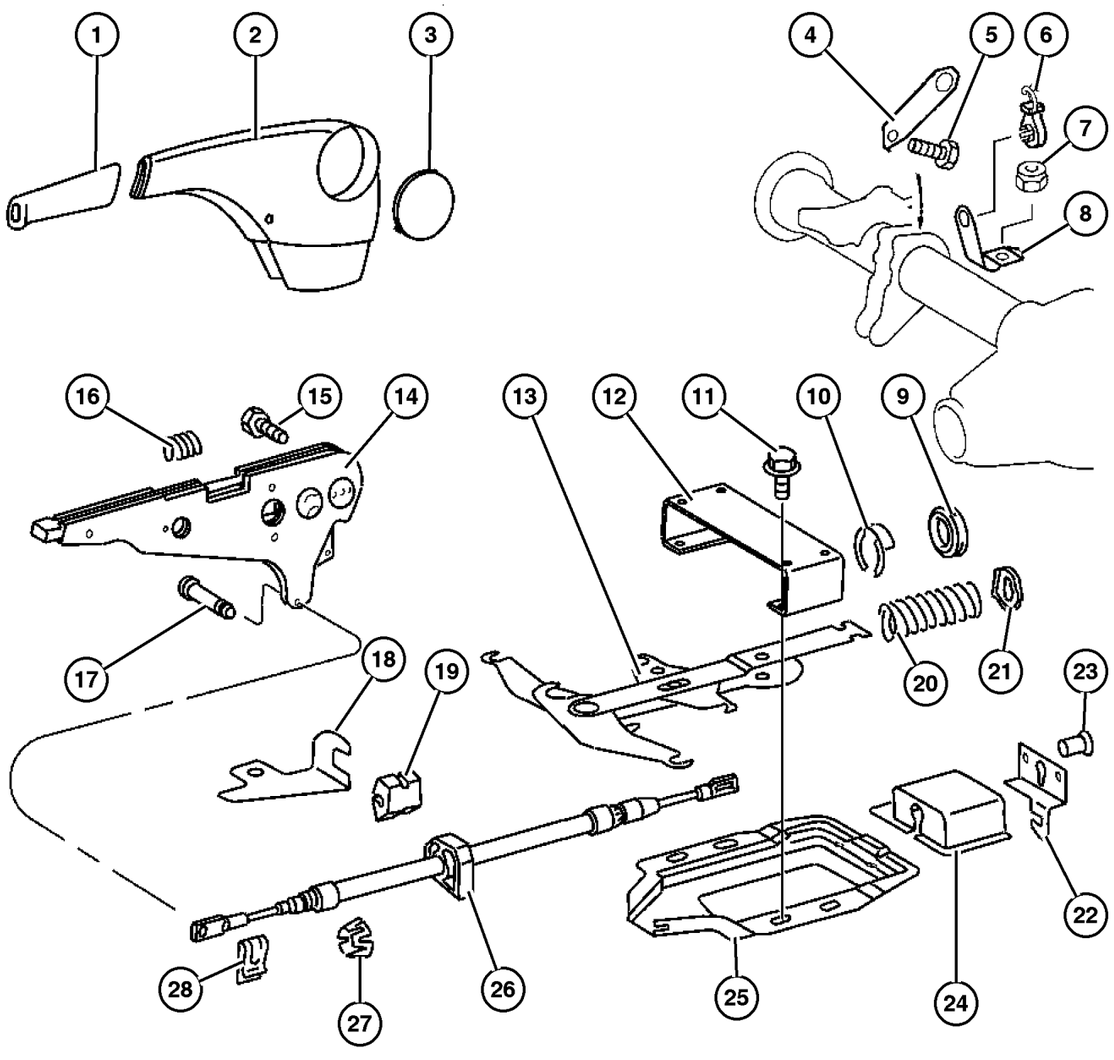

ITEM	PART NUMBER	QTY	LINE	SERIES	BODY	ENGINE	TRANS	TRIM	DESCRIPTION
		4	2, 6		51, 52, 54, 55, 56				
		4	2, 6		11, 12, 14, 15, 16				
		4	2, 6		01, 02, 06				
		4	3, 7		12, 15, 16				
12	5133 901AA	1	3, 7		12, 15, 16				BRACKET
13		1	3, 7		02, 06				EQUALIZER, Parking Brake Cable
	5119 231AA	1	2, 6		01, 02, 06				
		1	2, 6		11, 12, 14, 15, 16				
		1	2, 6		51, 52, 54, 55, 56				
	5140 766AA	1	3, 7		02, 06				With [4JR]
	5119 232AA	1	3, 7		02, 06				Without [4JR]
		1	3, 7		12, 15, 16				
14	5119 146AA	1	2, 6		01, 02, 06				LEVER, Park Brake
		1	2, 6		11, 12, 14, 15, 16				
		1	2, 6		51, 52, 54, 55, 56				
		1	3, 7		02, 06				
		1	3, 7		12, 15, 16				
15	5097 692AA	2	2, 6		01, 02, 06				SCREW, m8x20
		2	2, 6		11, 12, 14, 15, 16				

Refer to Model Legend Information Bookmark

AR = Use as required - = Non illustrated part # = New this model year

March 3, 2006

Parking Brake Lever Assembly
Figure 004-110

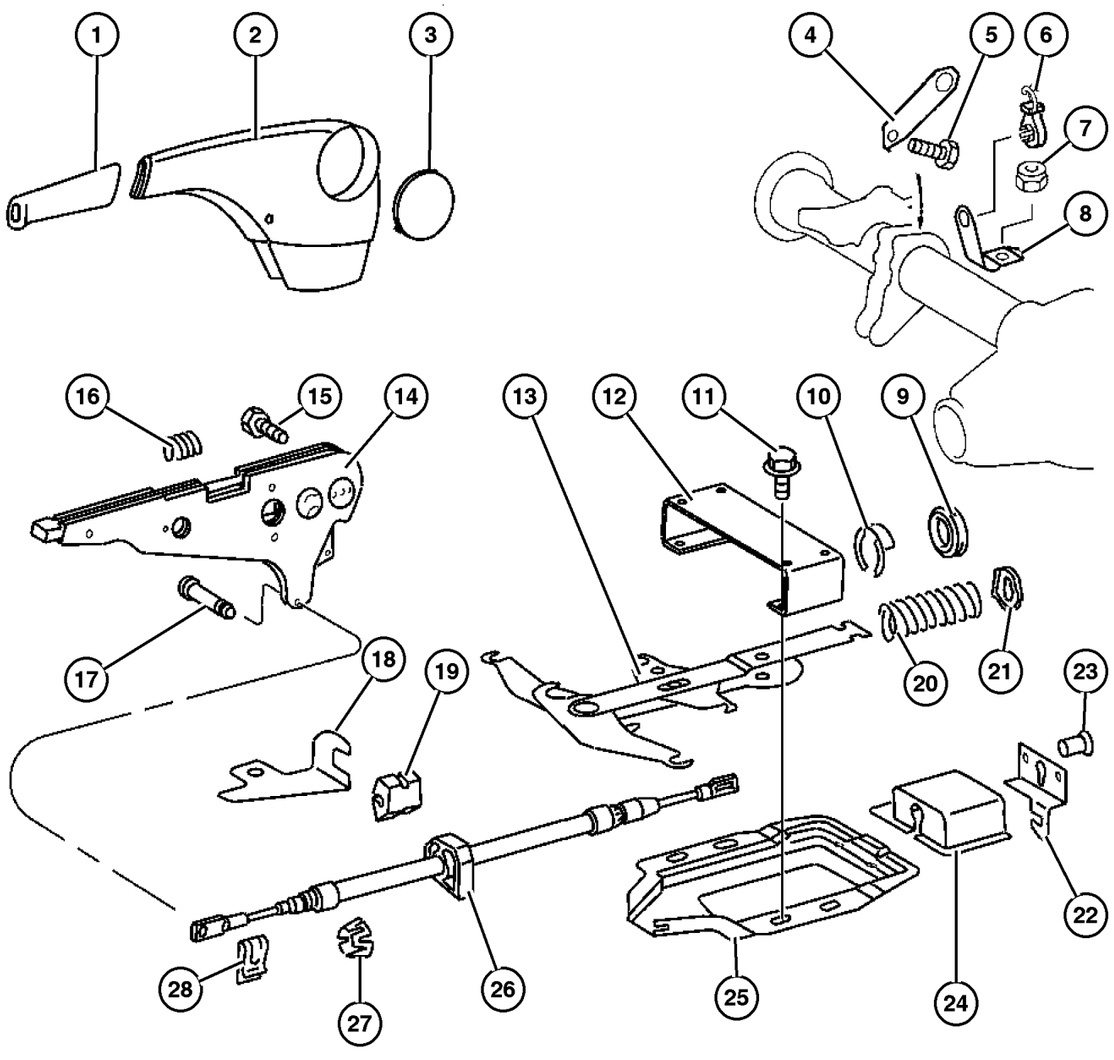

ITEM	PART NUMBER	QTY	LINE	SERIES	BODY	ENGINE	TRANS	TRIM	DESCRIPTION
		2	2, 6		51, 52, 54, 55, 56				
		2	3, 7		02, 06				
		2	3, 7		12, 15, 16				
16									SPRING
	5125 844AA	1	3, 7		02, 06				
		1	3, 7		12, 15, 16				
17									PIN, Parking Brake Handle
	5119 284AA	1	2, 6		01, 02, 06				
		1	2, 6		11, 12, 14, 15, 16				
		1	2, 6		51, 52, 54, 55, 56				
		1	3, 7		02, 06				
		1	3, 7		12, 15, 16				
18									BRACKET, Hand Brake
	5119 275AA	1	2, 6		02				
		1	2, 6		12, 15				
		1	2, 6		52, 55				
		1	3, 7		02				
		1	3, 7		12, 15				
19									GROMMET, Parking Brake Cable
	5119 295AA	2	2, 6		02				
		2	2, 6		12, 15				
		2	2, 6		52, 55				
		2	3, 7		02				
		2	3, 7		06				
		2	3, 7		12, 15				
		2	3, 7		16				
20									SPRING, Parking Brake Release
	5119 260AA	1	2, 6		01, 02, 06				
		1	2, 6		11, 12, 14, 15, 16				
		1	2, 6		51, 52, 54, 55, 56				

Refer to Model Legend Information Bookmark

AR = Use as required - = Non illustrated part # = New this model year

March 3, 2006

Parking Brake Lever Assembly
Figure 004-110

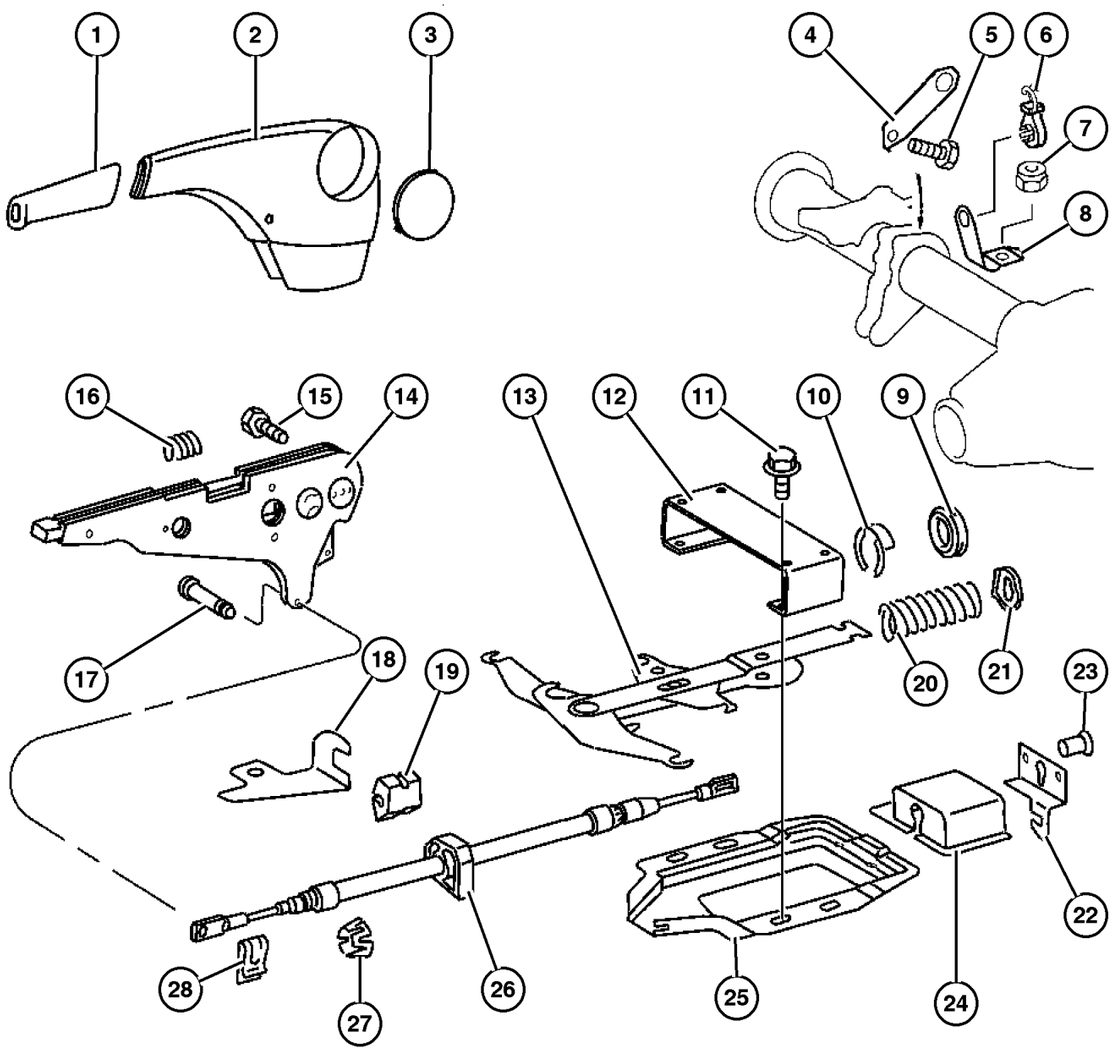

ITEM	PART NUMBER	QTY	LINE	SERIES	BODY	ENGINE	TRANS	TRIM	DESCRIPTION
		1	3, 7		02, 06				
		1	3, 7		12, 15, 16				
21									WASHER
	5119 287AA	1	2, 6		01, 02, 06				
		1	2, 6		11, 12, 14, 15, 16				
		1	2, 6		51, 52, 54, 55, 56				
		1	3, 7		02, 06				
		1	3, 7		12, 15, 16				
22									REINFORCEMENT, Park Brake Mounting
	5118 455AA	1	2, 6		01, 02				
		1	2, 6		06				
		1	2, 6		11, 12, 14, 15				
		1	3, 7		02				
		1	3, 7		06				
		1	3, 7		12, 15				
23									RIVET, Blind Bulb
	5133 417AA	3	2, 6		01, 02, 06				
		3	2, 6		11, 12, 14, 15, 16				
		3	2, 6		51, 52, 54, 55, 56				
		3	3, 7		02, 06				
		3	3, 7		12, 15, 16				
24									COVER, Parking Brake Cable
	5118 469AA	1	2, 6		01, 02, 06				
		1	2, 6		11, 12, 14, 15, 16				
		1	2, 6		51, 52, 54, 55, 56				

Refer to Model Legend Information Bookmark

AR = Use as required - = Non illustrated part # = New this model year

March 3, 2006

« RETURN TO GROUP INDEX

Parking Brake Lever Assembly
Figure 004-110

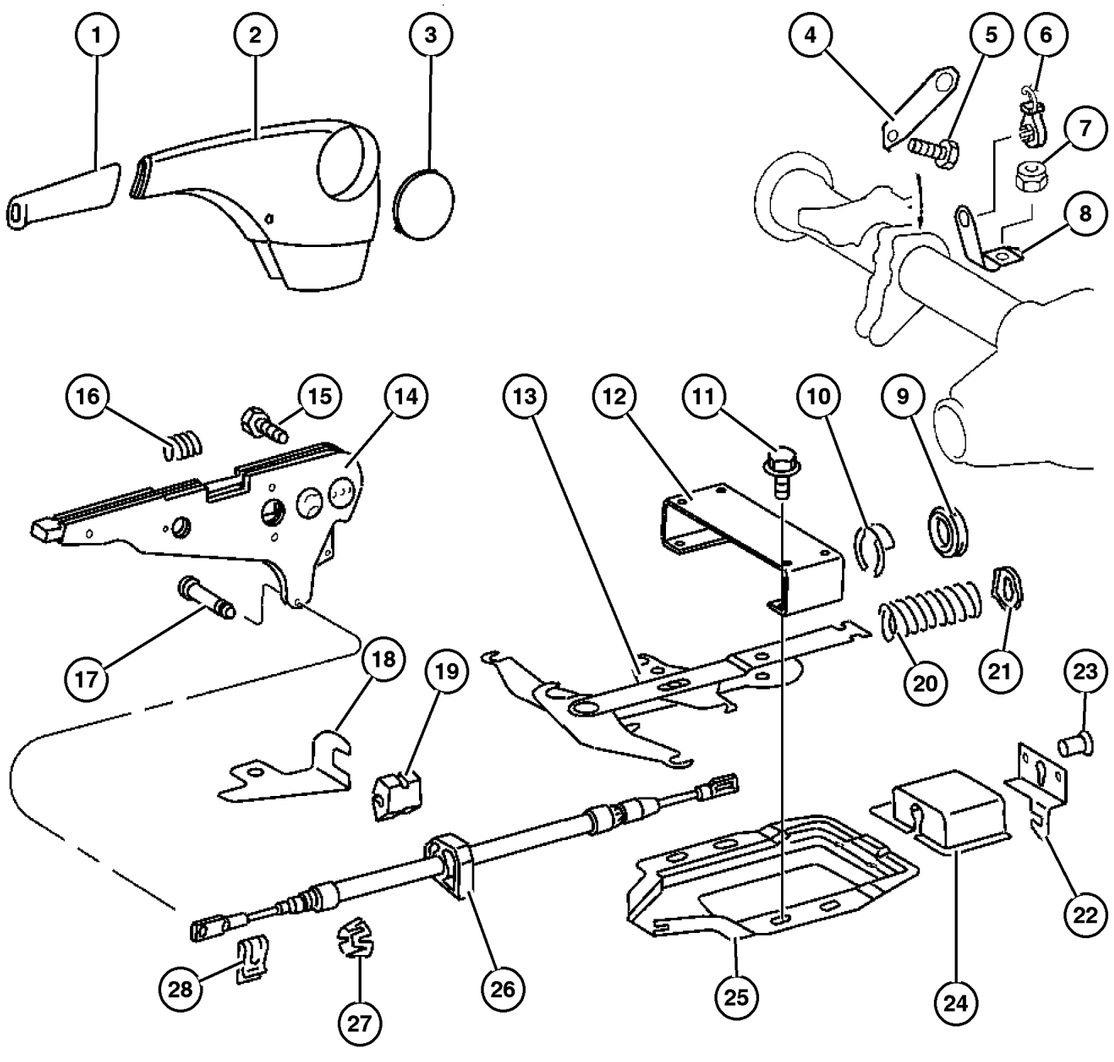

ITEM	PART NUMBER	QTY	LINE	SERIES	BODY	ENGINE	TRANS	TRIM	DESCRIPTION
		1	3, 7		02, 06				
		1	3, 7		12, 15, 16				
25									COVER, Equalizer
	5119 224AA	1	2, 6		01, 02, 06				
		1	2, 6		11, 12, 14, 15, 16				
		1	2, 6		51, 52, 54, 55, 56				
		1	3, 7		02, 06				
		1	3, 7		12, 15, 16				
26									CABLE, Parking Brake
	5129 192AA	1	2, 6		01				
	5119 245AA	1	2, 6		02				
	5119 247AA	1	2, 6		06				
	5129 192AA	1	2, 6		11, 14				
	5119 245AA	1	2, 6		12, 15				
	5119 247AA	1	2, 6		16				
	5129 192AA	1	2, 6		51, 54				
	5119 245AA	1	2, 6		52, 55				
	5119 247AA	1	2, 6		56				
	5119 245AA	1	3, 7		02				
	5119 247AA	1	3, 7		06				
	5119 245AA	1	3, 7		12, 15				
	5119 247AA	1	3, 7		16				
27									CLIP, Cable
	5119 298AA	1	2, 6		01, 02, 06				
		1	2, 6		11, 12, 14, 15, 16				
		1	2, 6		51, 52, 54, 55, 56				
		1	3, 7		02, 06				
		1	3, 7		12, 15, 16				
28									CLIP, Retaining
	5126 243AA	1	2, 6		01, 02, 06				

Refer to Model Legend Information Bookmark

AR = Use as required - = Non illustrated part # = New this model year

March 3, 2006

« RETURN TO GROUP INDEX

Parking Brake Lever Assembly
Figure 004-110

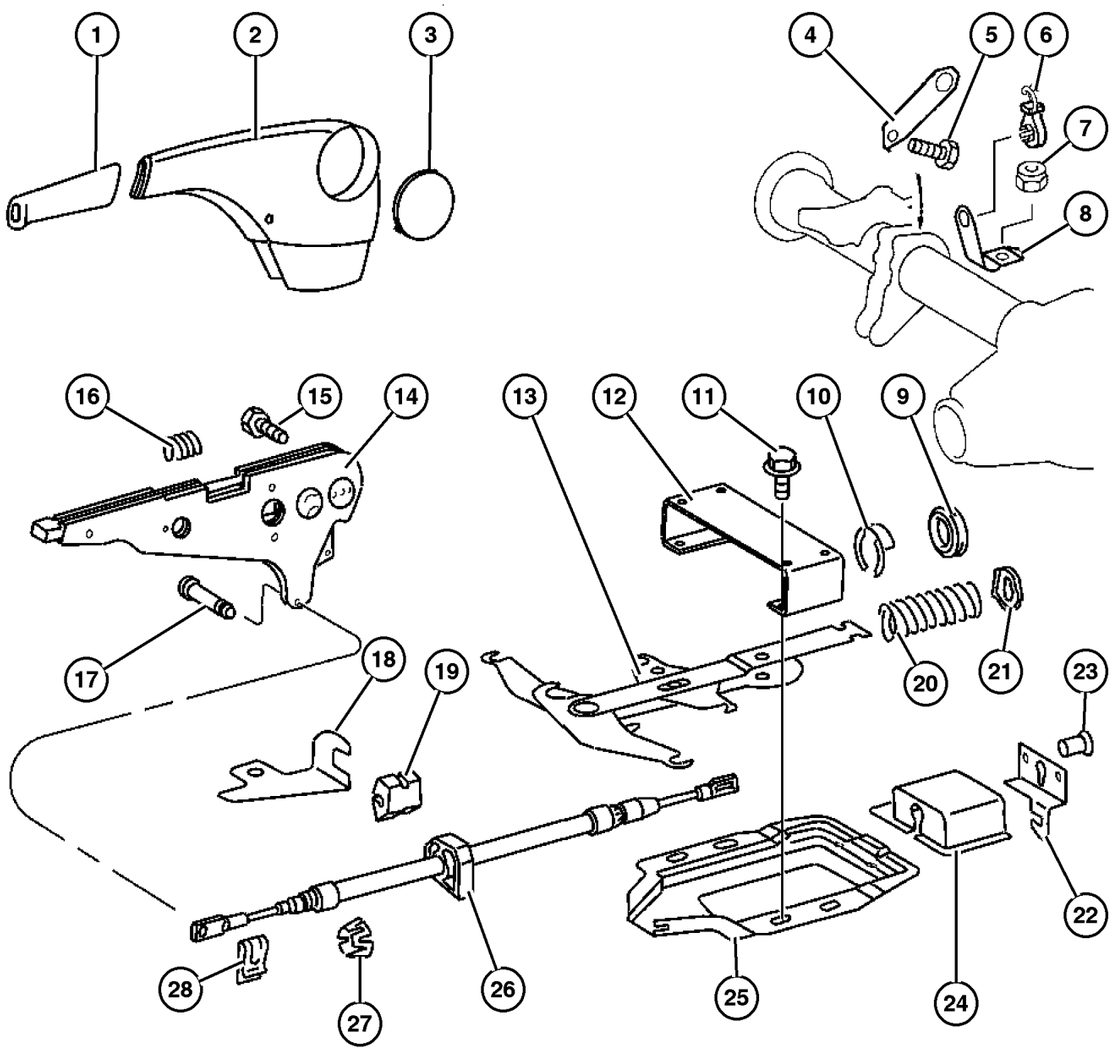

ITEM	PART NUMBER	QTY	LINE	SERIES	BODY	ENGINE	TRANS	TRIM	DESCRIPTION
		1	2, 6		11, 12, 14, 15, 16				
		1	2, 6		51, 52, 54, 55, 56				
		1	3, 7		02, 06				
		1	3, 7		12, 15, 16				

Refer to Model Legend Information Bookmark

AR = Use as required - = Non illustrated part # = New this model year

March 3, 2006

« RETURN TO GROUP INDEX

Parking Brake Assembly
Figure 004-120

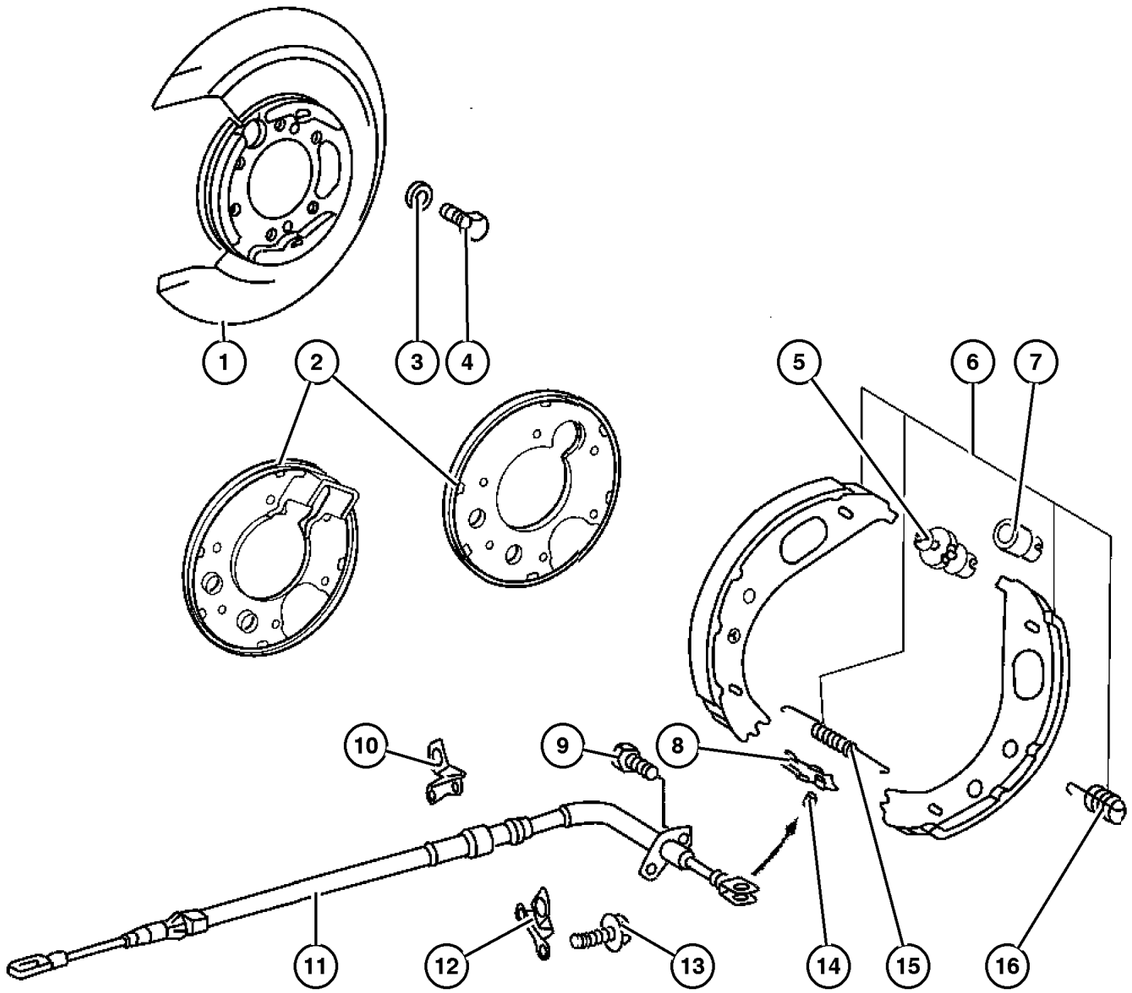

ITEM	PART NUMBER	QTY	LINE	SERIES	BODY	ENGINE	TRANS	TRIM	DESCRIPTION
1									PLATE, Brake Backing
	5139 222AA	1	2, 6						Right
	5103 952AA	1	2, 6						Left
2									PLATE, Brake Backing
	5139 224AA	1	3, 7						Right
	5139 223AA	1	3, 7						Left
3	5139 232AA	4	3, 7						WASHER
4	5139 231AA	4							SCREW
5	5139 234AA	2	2, 3, 6, 7						ADJUSTER, Parking Brake
6									SHOE AND LINING, parking Brake
	5103 792AA	1	2, 6						
	5103 793AA	1	3, 7						
7	5139 233AA	2	2, 3, 6, 7						BUSHING
8	5101 691AA	2							PLATE, Brake Shoe Guide
9	5098 124AA	2							SCREW
10	5139 229AA	1	3, 7						BRACKET, Parking Brake, Right Rear
11									CABLE, Parking Brake
	5139 225AA	2	2, 6						Right or Left
	5139 227AA	1	3, 7						Right
	5139 226AA	1	3, 7						Left
12	5139 228AA	1	3, 7						BRACKET, Parking Brake, Left Rear
13	5134 371AA	10	2, 3, 6, 7						SCREW AND WASHER
14	5098 414AA	2							PIN
15	5139 736AA	2	2, 6						SPRING, Brake Shoe to Shoe
16	5139 479AA	4	2, 6						SPRING, Brake Shoe Hold Down

Refer to Model Legend Information Bookmark

AR = Use as required - = Non illustrated part # = New this model year

March 3, 2006

« RETURN TO GROUP INDEX

Group – 005
Service Brakes

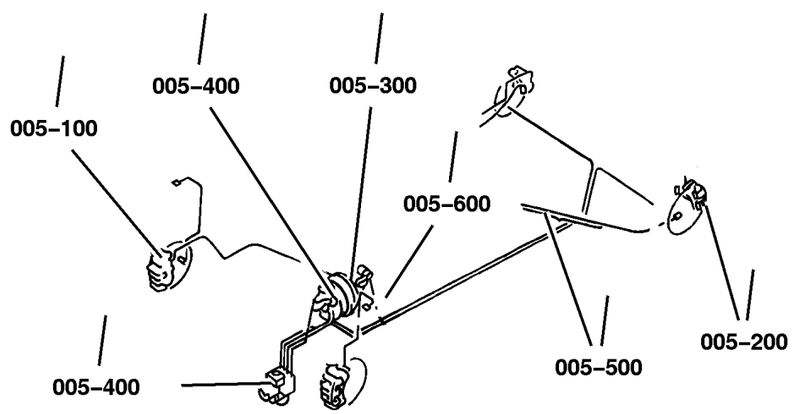

005–100 Front Brakes 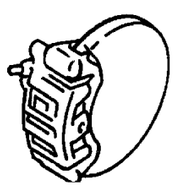	**005–200** Rear Brakes 	**005–300** Power Brake Booster 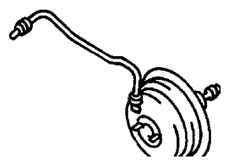	**005–400** Brake Master Cylinder 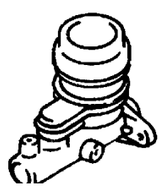
005–500 Brake Lines and Hoses 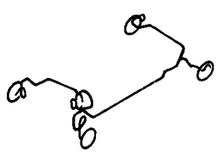	**005–600** Brake Pedals 		

GROUP 5 - Service Brakes

Illustration Title	Group-Fig. No.
Front Brakes	
Brakes, Front	Fig. 005-110
Rear Brakes	
Brakes,Rear,272MM	Fig. 005-210
Brakes,Rear,285MM	Fig. 005-220
Power Brake Booster	
Booster	Fig. 005-310
Vacuum Lines	Fig. 005-320
Vacuum Reservoir	Fig. 005-330
Brake Master Cylinder	
Master Cylinder	Fig. 005-410
Hydraulic Control Unit and ABS Module	Fig. 005-420
Brake Lines and Hoses	
Lines,Brake,With ABS,2500/3500 Series	Fig. 005-510
Brake, Power Regulator	Fig. 005-520
Brake Pedals	
Pedal Brake	Fig. 005-610

Brakes, Front
Figure 005-110

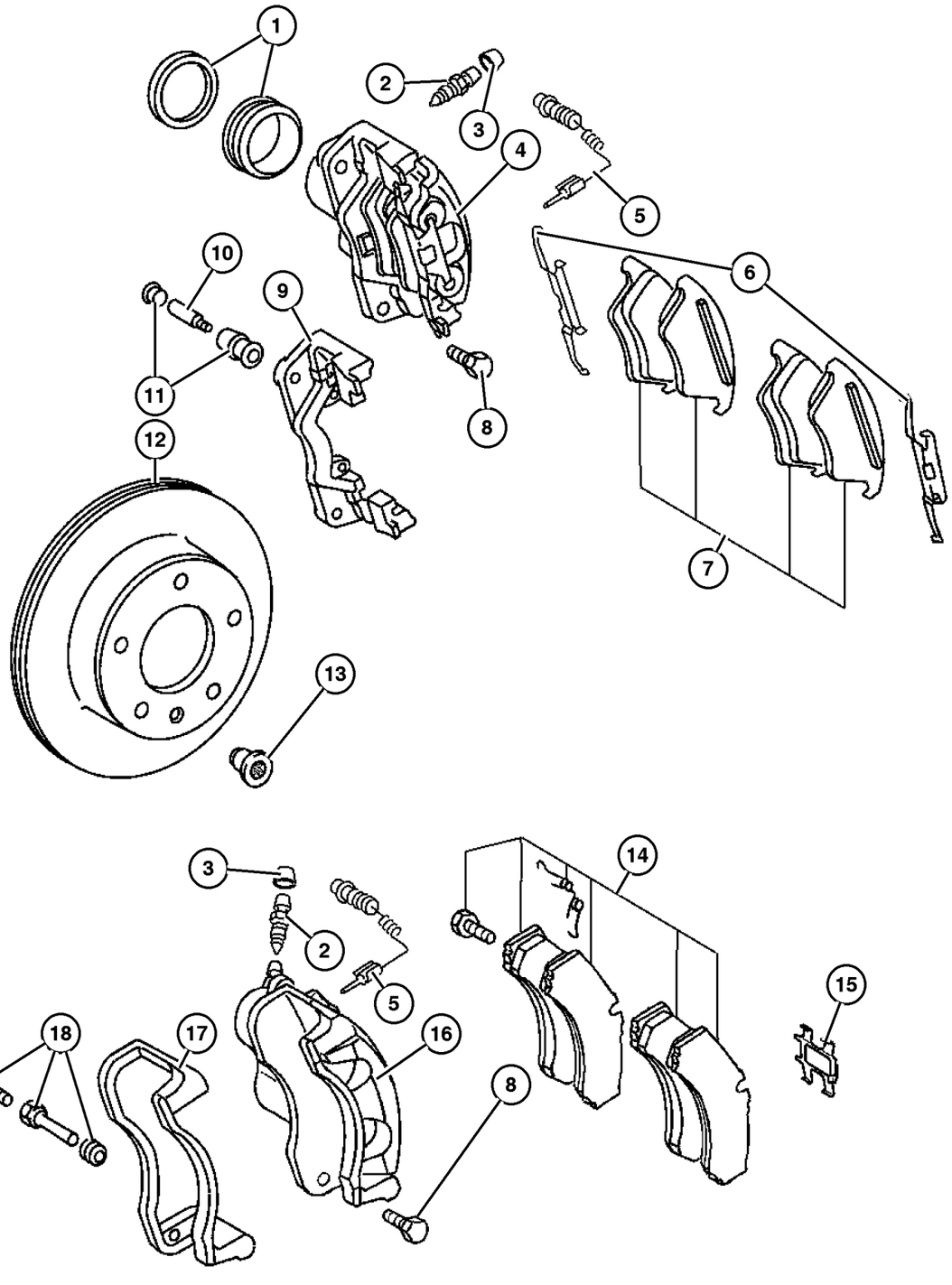

ITEM	PART NUMBER	QTY	LINE	SERIES	BODY	ENGINE	TRANS	TRIM	DESCRIPTION
Note: You must check the brand name on the old caliper to determine which one to order.									
Note: On item 7,either part number can be used for item 4.									
1	5139 261AA	1							SEAL, Caliper Piston
2	5139 258AA	1	2, 6						BLEEDER SCREW, Brake
3	5126 309AA	1	2, 3, 6, 7						CAP, Bleeder
4									CALIPER, Disc Brake
	5135 642AA	1							Teves/Jurid, Right
	5135 643AA	1							Teves/Jurid, Left
5	5103 583AB	2	2, 3, 6, 7						SENSOR, brake wear
6	5139 906AA	2	2, 6						SPRING, Brake Pad Retraction
7									PAD KIT, Disc Brake
	5103 794AA	1							Teves
	5135 895AA	1							Galfer
8	5139 464AA	4							SCREW
9	5103 631AA	1							ADAPTER, Disc Brake Caliper
10	5103 632AA	1							PIN KIT, Disc Brake
11	5114 556AA	1							BUSHING, Caliper
12									ROTOR, Brake
	5104 561AA	1							Up To Front Axle S482213/ Y422059
	5103 602AC	1							From Front Axle S482214/Y422060
	5114 479AA	1							
13									SCREW
	5104 621AA	2							M8-Up To Front Axle S482213/ Y422059
	5139 361AA	2							M12-From Front Axle S482214/ Y422060
14									PAD KIT, Disc Brake
	5103 556AA	1	2, 3, 6, 7						Bosch
	5103 790AA	1							Wabco/Perrot
15	5103 635AA	2							RETAINER, Brake Hold Down Spring
16									CALIPER, Disc Brake
	5127 482AA	1							Bosch, Right
	5127 483AA	1							Bosch, Left
	5127 486AA	1							Wabco/Perrot, Right
	5135 215AA	1							Wabco/Perrot, Left
17									ADAPTER, Disc Brake Caliper
	5135 915AA	1							Bosch
	5135 916AA	1							Wabco/Perrot
18									PIN KIT, Disc Brake
	5103 729AA	1							Bosch
	5103 630AA	1							Wabco/Perrot

Refer to Model Legend Information Bookmark

Brakes,Rear,272MM
Figure 005-210

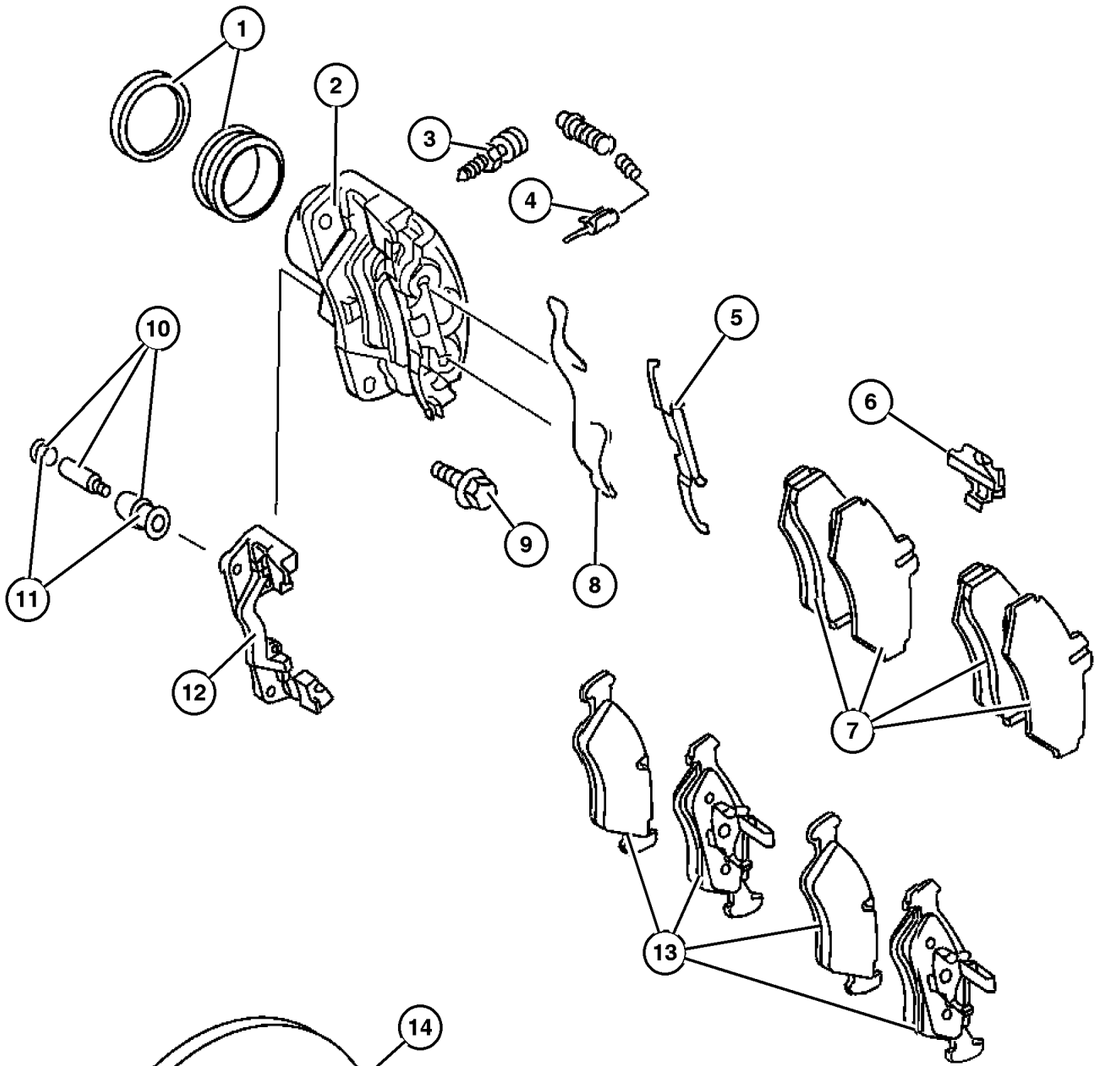

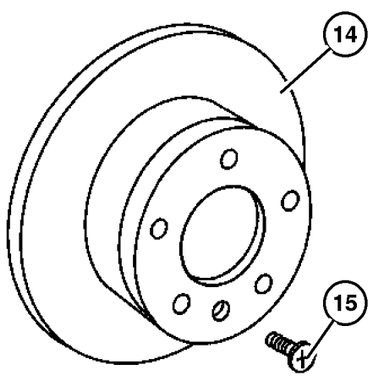

ITEM	PART NUMBER	QTY	LINE	SERIES	BODY	ENGINE	TRANS	TRIM	DESCRIPTION
Note: You must check the brand name on the old caliper to determine which one to order.									
Note: On item 7,either part number can be used it this is the style on the vehicle.									
1									SEAL, Caliper Piston
	5139 264AA	1	2, 6						Bosch
	5139 263AA	1	2, 6						Teves
2									CALIPER, Disc Brake
	5103 742AA	1	2, 6						Bosch, Right
	5103 741AA	1	2, 6						Bosch, Left
	5135 897AA	1	2, 6						Teves, Right
	5135 898AA	1	2, 6						Teves, Left
3									BLEEDER SCREW, Brake
	5139 258AA	1	2, 6						Bosch
	5139 245AA	1	2, 6						Teves
4	5103 583AB	2	2, 3, 6, 7						SENSOR, brake wear
5	5139 265AA	1	2, 3, 6, 7						SPRING, Retainer, Teves,Jurid, Right or Left
6	5103 634AA	1	2, 6						CLIP, Brake Anti-Rattle
7									PAD KIT, Disc Brake
	5103 557AA	1	2, 6						Bosch,Ferodo
	5139 260AA	1	2, 6						Bosch,Jurid
8	5139 266AA	1	2, 6						SPRING, Retainer, Teves,Textar, Right or Left
9									SCREW
	6104 234AA	2	2, 6		01, 02, 06				
		2	2, 6		11, 12, 14, 15, 16				
		2	2, 6		51, 52, 54, 55, 56				
		2	3, 7		02, 06				
		2	3, 7		12, 15, 16				
10									PIN KIT, Disc Brake
	5103 729AA	1							Bosch
	5103 632AA	1							Teves
11	5114 556AA	1							BUSHING, Caliper, Teves
12									ADAPTER, Disc Brake Caliper
	5103 633AA	1							Bosch, Right or Left
	5135 747AA	1							Teves, Right or Left
13	5103 550AA	1	2, 3, 6, 7						PAD KIT, Disc Brake, Teves
14									ROTOR, Brake

Refer to Model Legend Information Bookmark

AR = Use as required - = Non illustrated part # = New this model year

March 3, 2006

« RETURN TO GROUP INDEX

»

Brakes,Rear,272MM
Figure 005-210

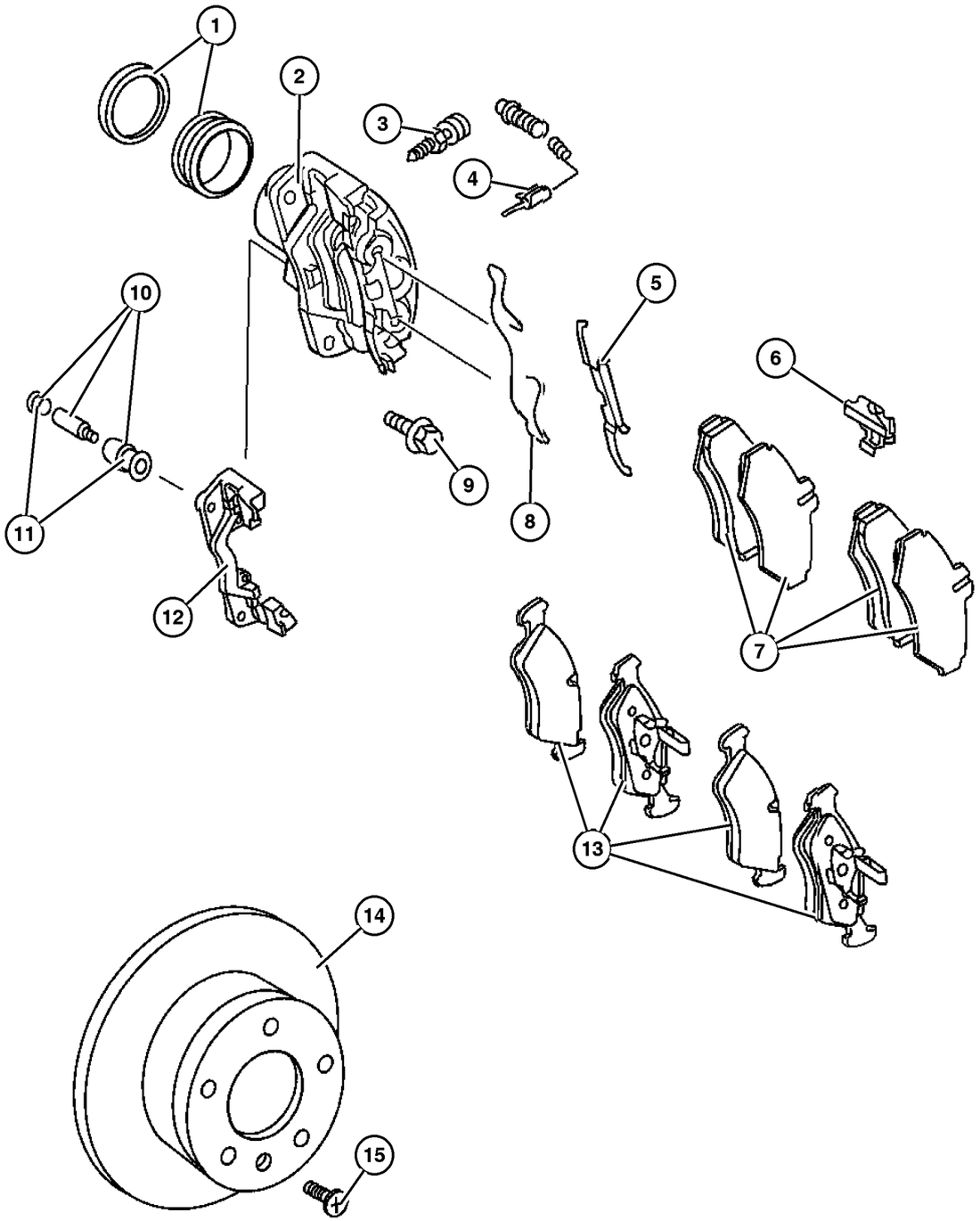

ITEM	PART NUMBER	QTY	LINE	SERIES	BODY	ENGINE	TRANS	TRIM	DESCRIPTION
	5103 603AA	2	2, 6		11, 12, 14, 15, 16				
		2	2, 6		51, 52, 54, 55, 56				
15	5139 361AA	2							SCREW

Refer to Model Legend Information Bookmark

AR = Use as required - = Non illustrated part # = New this model year

March 3, 2006

« RETURN TO GROUP INDEX

«

Brakes,Rear,285MM
Figure 005-220

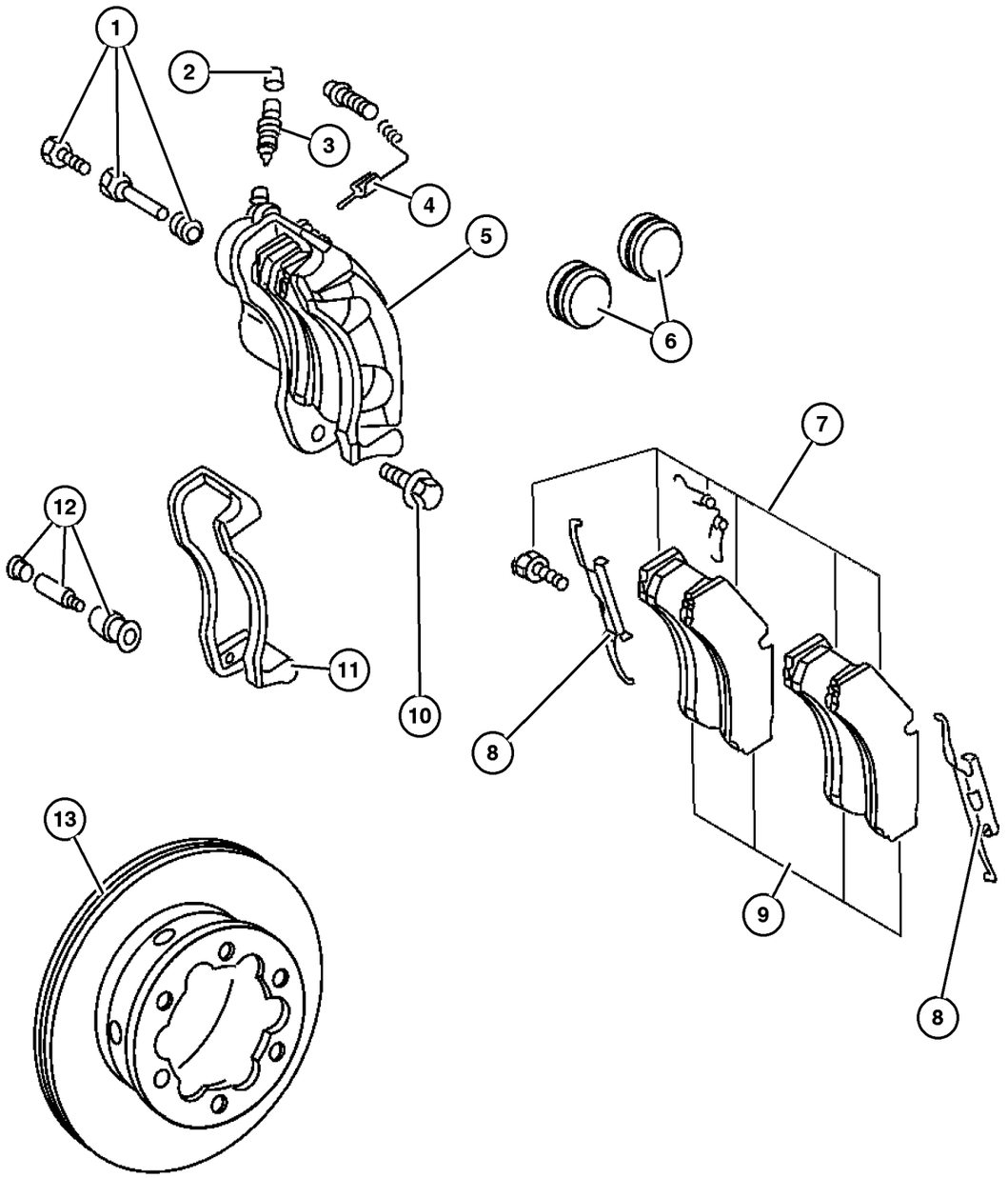

ITEM	PART NUMBER	QTY	LINE	SERIES	BODY	ENGINE	TRANS	TRIM	DESCRIPTION
Note: You must check the brand name on the old caliper to determine which one to order.									
1	5103 630AA	1							PIN KIT, Disc Brake, Right or Left
2	5126 309AA	1	2, 3, 6, 7						CAP, Bleeder
3									BLEEDER SCREW, Brake
	5139 258AA	1	2, 6						Bosch
	5139 259AA	1							Perrot/Wabco,Textar
4	5103 583AB	2	2, 3, 6, 7						SENSOR, brake wear, Right or Left
5									CALIPER, Disc Brake
	5127 482AA	1							Bosch, Right
	5127 483AA	1							Bosch, Left
	5127 486AA	1							Wabco, Right
	5135 215AA	1							Wabco, Left
6	5139 261AA	1							SEAL, Caliper Piston, Bosch,Textar
7	5103 790AA	1							PAD KIT, Disc Brake, Perrot/Wabco, Textar
8	5103 635AA	2							RETAINER, Brake Hold Down Spring, Bosch,Textar
9	5103 556AA	1	2, 3, 6, 7						PAD KIT, Disc Brake, Bosch,Textar
10	5139 464AA	4							SCREW
11									ADAPTER, Disc Brake Caliper
	5135 915AA	1							Bosch, Right or Left
	5135 916AA	1							Wabco, Right or Left
12	5103 729AA	1							PIN KIT, Disc Brake, Teilesatz,Bosch
13									ROTOR, Brake
	5103 603AA	2	2, 6		11, 12, 14, 15, 16				
		2	2, 6		51, 52, 54, 55, 56				
	5103 606AA	2	3, 7						

Refer to Model Legend Information Bookmark

AR = Use as required - = Non illustrated part # = New this model year

March 3, 2006

RETURN TO GROUP INDEX

Booster
Figure 005-310

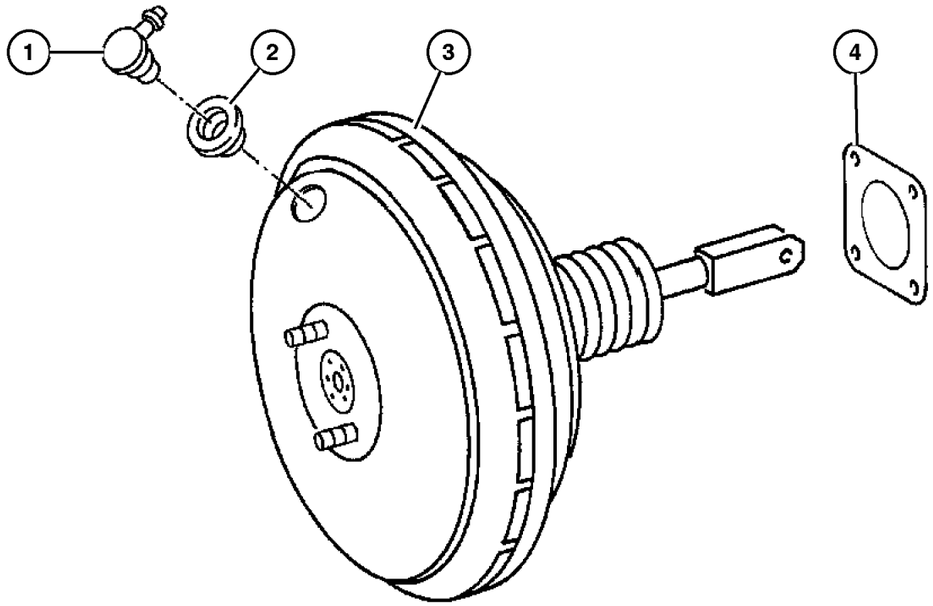

ITEM	PART NUMBER	QTY	LINE	SERIES	BODY	ENGINE	TRANS	TRIM	DESCRIPTION
1									VALVE, Brake Booster Check
	5119 362AA	1	2, 6		01, 02, 06				
		1	2, 6		11, 12, 14, 15, 16				
		1	2, 6		51, 52, 54, 55, 56				
		1	3, 7		02, 06				
		1	3, 7		12, 15, 16				
2									GASKET
	5133 696AA	1	2, 6		01, 02, 06				Vacuum Line to Booster
		1	2, 6		11, 12, 14, 15, 16				Vacuum Line to Booster
		1	2, 6		51, 52, 54, 55, 56				Vacuum Line to Booster
		1	3, 7		02, 06				Vacuum Line to Booster
		1	3, 7		12, 15, 16				Vacuum Line to Booster
3									BOOSTER, Power Brake
	5119 372AA	1	2, 6		01, 02, 06				
		1	2, 6		11, 12, 14, 15, 16				
		1	2, 6		51, 52, 54, 55, 56				
		1	3, 7		02, 06				
		1	3, 7		12, 15, 16				
4									GASKET, Booster To Dash
	5119 386AA	1	2, 6		01, 02, 06				
		1	2, 6		11, 12, 14, 15, 16				
		1	2, 6		51, 52, 54, 55, 56				

Refer to Model Legend Information Bookmark

Booster
Figure 005-310

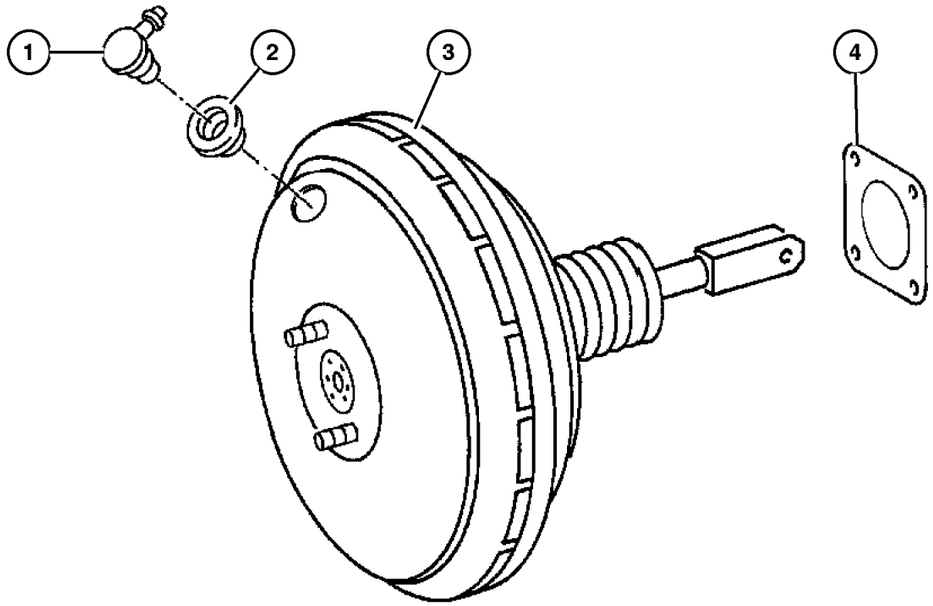

ITEM	PART NUMBER	QTY	LINE	SERIES	BODY	ENGINE	TRANS	TRIM	DESCRIPTION
		1	3, 7		02, 06				
		1	3, 7		12, 15, 16				

Refer to Model Legend Information Bookmark

Vacuum Lines
Figure 005-320

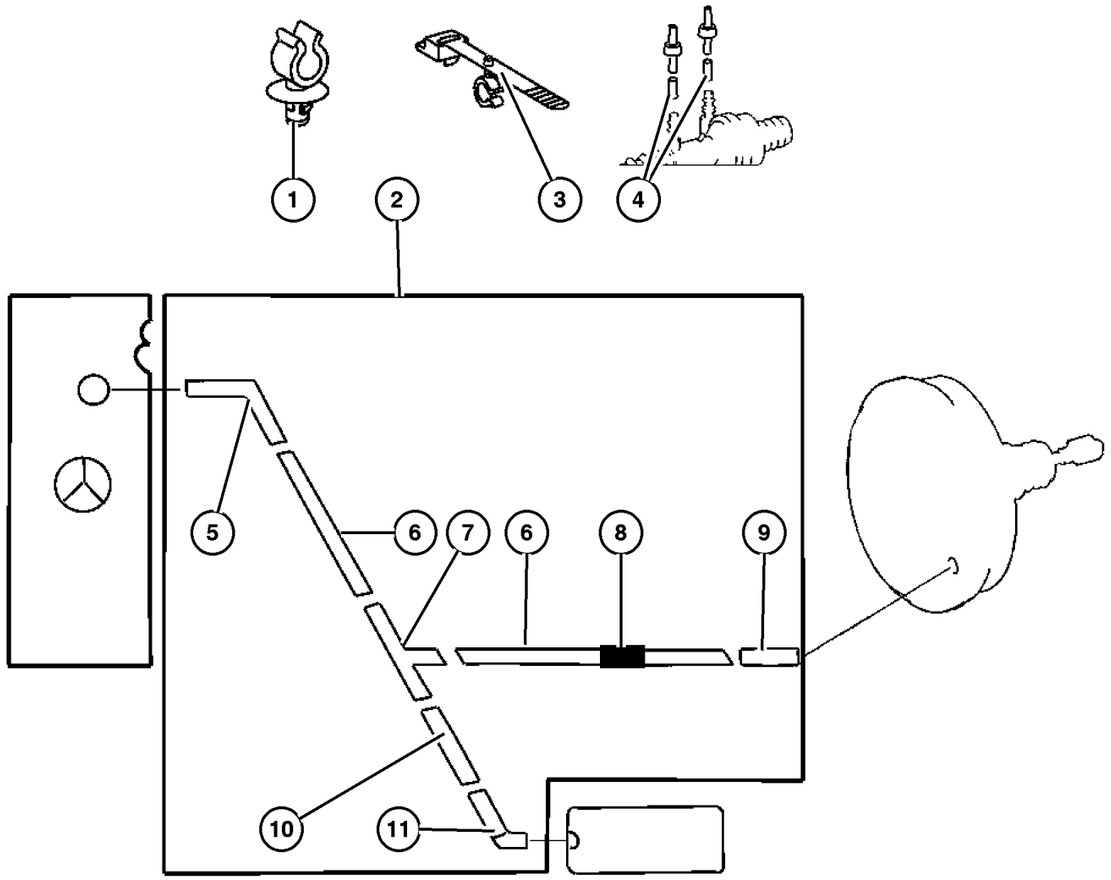

ITEM	PART NUMBER	QTY	LINE	SERIES	BODY	ENGINE	TRANS	TRIM	DESCRIPTION
1									CLIP, Brake Line
	5125 578AA	2	3, 7		02, 06				
		2	3, 7		12, 15, 16				
2									HARNESS, Vacuum
	5119 349AA	1	3, 7		02, 06				
		1	3, 7		12, 15, 16				
	5129 239AA	1	2, 6		01, 02, 06				
		1	2, 6		11, 12, 14, 15, 16				
		1	2, 6		51, 52, 54, 55, 56				
3									STRAP
	6104 770AA	1	2, 6		01, 02, 06				
		1	2, 6		11, 12, 14, 15, 16				
		1	2, 6		51, 52, 54, 55, 56				
		1	3, 7		02, 06				
		1	3, 7		12, 15, 16				
4									HOSE
	5080 390AA	1	2, 6		01, 02, 06				
		1	2, 6		11, 12, 14, 15, 16				
		1	2, 6		51, 52, 54, 55, 56				
		1	3, 7		02, 06				
		1	3, 7		12, 15, 16				
5									CONNECTOR
	5126 007AA	1	2, 6		01, 02, 06				

Refer to Model Legend Information Bookmark

AR = Use as required - = Non illustrated part # = New this model year

March 3, 2006

Vacuum Lines
Figure 005-320

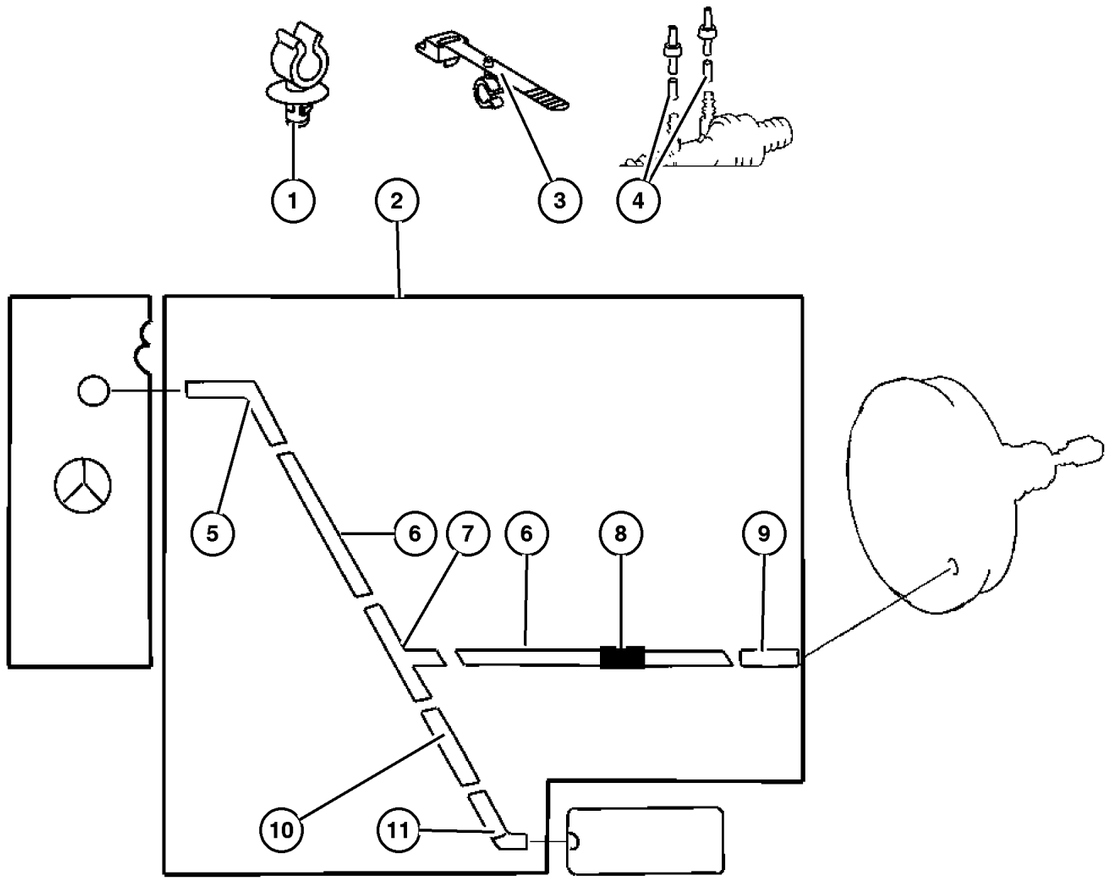

ITEM	PART NUMBER	QTY	LINE	SERIES	BODY	ENGINE	TRANS	TRIM	DESCRIPTION
		1	2, 6		11, 12,				
					14, 15,				
					16				
		1	2, 6		51, 52,				
					54, 55,				
					56				
		1	3, 7		02, 06				
		1	3, 7		12, 15,				
					16				
6									HOSE, Vacuum
	5119 395AA	1	2, 6		01, 02,				
					06				
		1	2, 6		11, 12,				
					14, 15,				
					16				
		1	2, 6		51, 52,				
					54, 55,				
					56				
		1	3, 7		02, 06				
		1	3, 7		12, 15,				
					16				
7									TEE, vacuum hose
	5119 363AA	1	3, 7		02, 06				
		1	3, 7		12, 15,				
					16				
8									WASHER
	5125 507AB	2	2, 6		01, 02,				
					06				
		2	2, 6		11, 12,				
					14, 15,				
					16				
		2	2, 6		51, 52,				
					54, 55,				
					56				
		200	3, 7		02, 06				
		2	3, 7		12, 15,				
					16				
9									VALVE, Brake Booster Check
	5119 362AA	1	2, 6		01, 02,				
					06				
		1	2, 6		11, 12,				
					14, 15,				
					16				

Refer to Model Legend Information Bookmark

Vacuum Lines
Figure 005-320

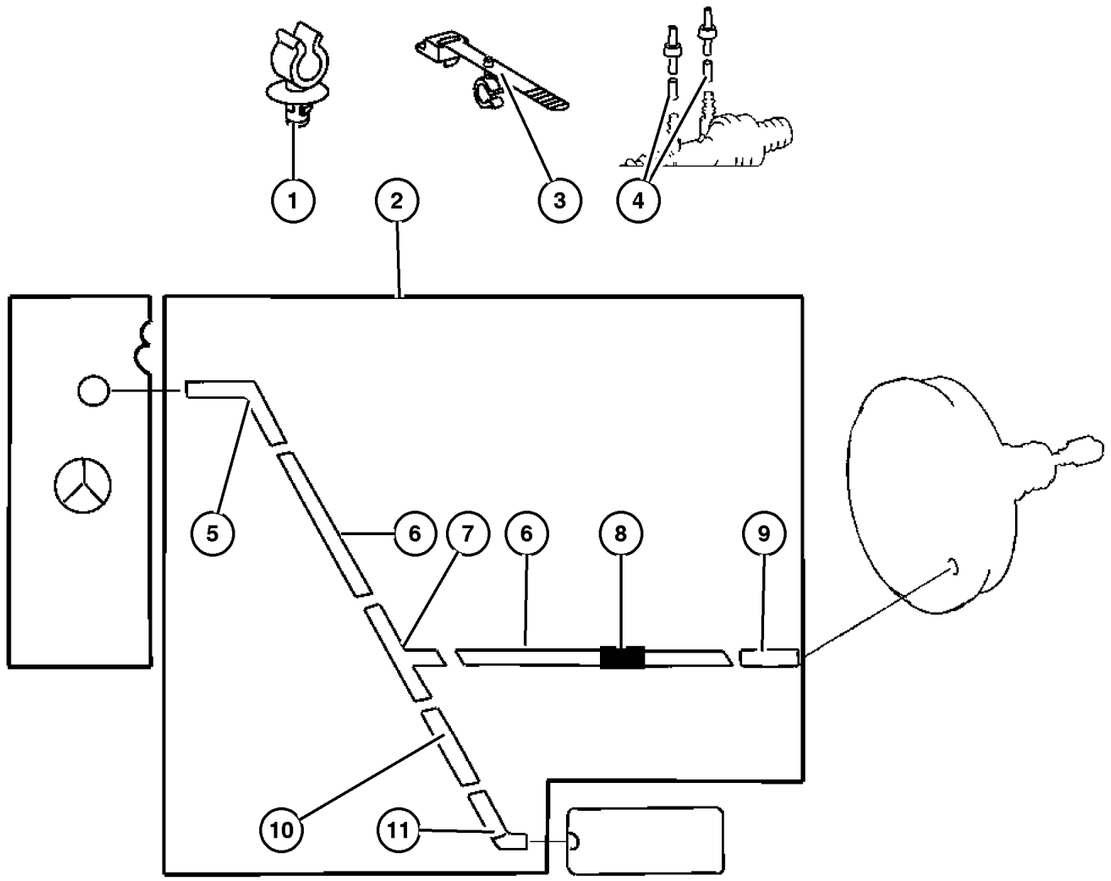

ITEM	PART NUMBER	QTY	LINE	SERIES	BODY	ENGINE	TRANS	TRIM	DESCRIPTION
		1	2, 6		51, 52, 54, 55, 56				
		1	3, 7		02, 06				
		1	3, 7		12, 15, 16				
10	5119 392AA	1							HOSE, Vacuum
11									COUPLING, Male
	5125 804AA	1	3, 7		02, 06				
		1	3, 7		12, 15, 16				
-12	5098 383AA-	1	2, 3, 6, 7						CAP, Nut

Refer to Model Legend Information Bookmark

AR = Use as required - = Non illustrated part # = New this model year

March 3, 2006

« RETURN TO GROUP INDEX

Vacuum Reservoir
Figure 005-330

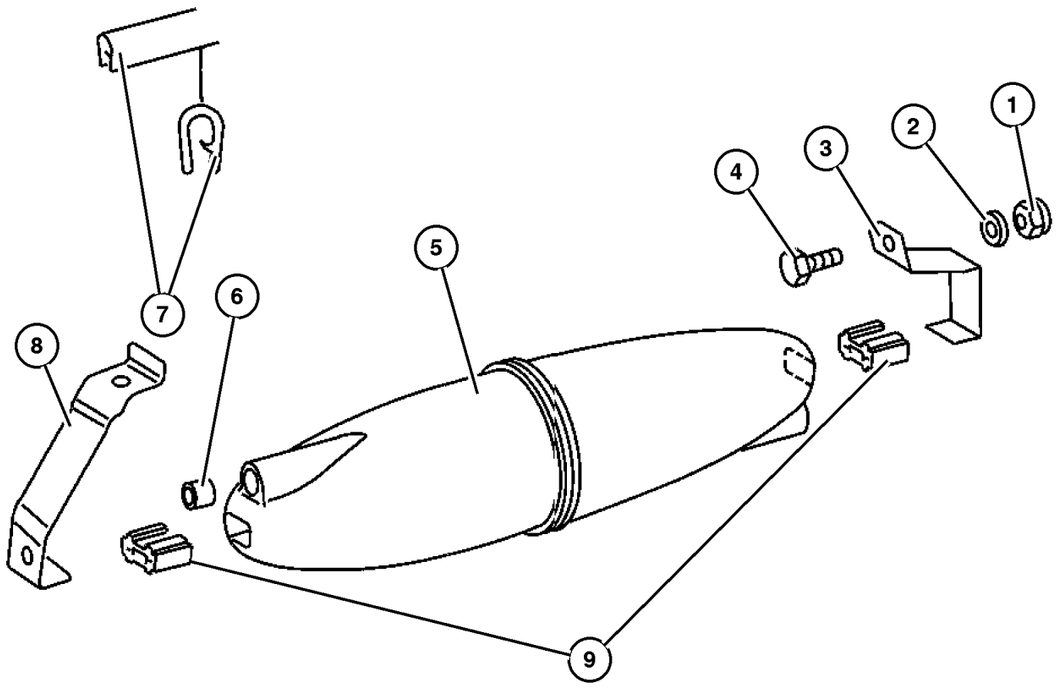

ITEM	PART NUMBER	QTY	LINE	SERIES	BODY	ENGINE	TRANS	TRIM	DESCRIPTION
1									NUT, Hex
	5126 237AA	2	3, 7		02, 06				
		2	3, 7		12, 15, 16				
2									WASHER, Flat, M8, (NOT SERVICED) (Not Serviced)
3									BRACKET, Vacuum Reservoir
	5119 388AA	1	3, 7		02, 06				
		1	3, 7		12, 15, 16				
4									BOLT
	5104 655AA	2	3, 7		02, 06				
		2	3, 7		12, 15, 16				
5									RESERVOIR, Vacuum
	5119 357AA	1	3, 7		02, 06				
		1	3, 7		12, 15, 16				
6									SEAL, Vacuum Line
	5119 400AA	1	3, 7		02, 06				
		1	3, 7		12, 15, 16				
7									GUARD, Edge
	5132 721AA	100	3, 7		02, 06				
		100	3, 7		12, 15, 16				
8									BRACKET, Vacuum Reservoir
	5119 388AA	1	3, 7		02, 06				
		1	3, 7		12, 15, 16				
9									ISOLATOR
	5125 498AA	2	3, 7		02, 06				
		2	3, 7		12, 15, 16				

Refer to Model Legend Information Bookmark

AR = Use as required - = Non illustrated part # = New this model year

March 3, 2006

« RETURN TO GROUP INDEX

Master Cylinder
Figure 005-410

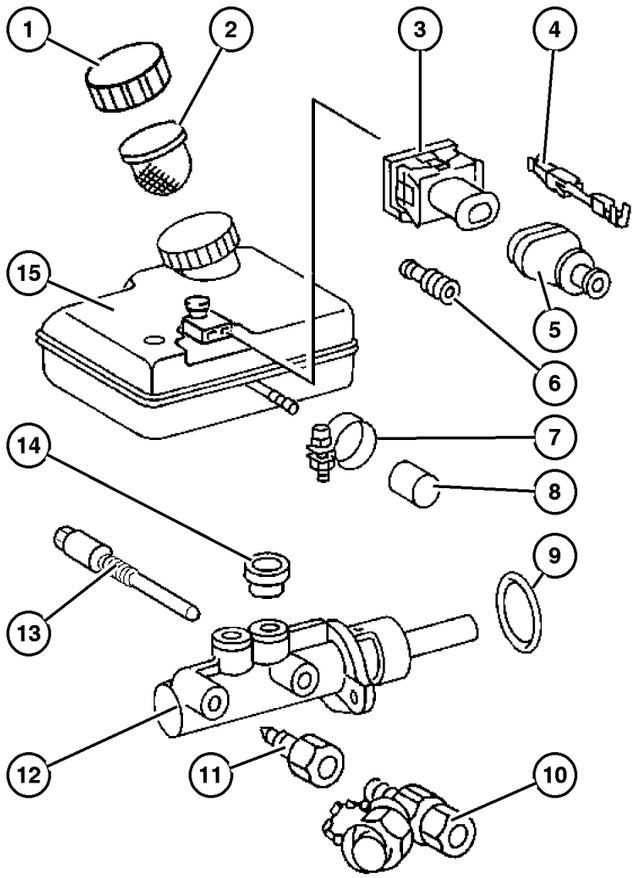

ITEM	PART NUMBER	QTY	LINE	SERIES	BODY	ENGINE	TRANS	TRIM	DESCRIPTION
Note: Sales Codes:									
[4DR]=Weight Variant 3.88T									
1									CAP, Master Cylinder Reservoir
	5098 710AA	1	2, 6		01, 02, 06				
		1	2, 6		11, 12, 14, 15, 16				
		1	2, 6		51, 52, 54, 55, 56				
		1	3, 7		02, 06				
		1	3, 7		12, 15, 16				
2									FILTER, Brake Master Cylinder
	5119 374AA	1	2, 6		01, 02, 06				
		1	2, 6		11, 12, 14, 15, 16				
		1	2, 6		51, 52, 54, 55, 56				
		1	3, 7		02, 06				
		1	3, 7		12, 15, 16				
3									CONNECTOR
	5120 749AA	1	2, 6		01, 02, 06				
		1	2, 6		11, 12, 14, 15, 16				
		1	2, 6		51, 52, 54, 55, 56				
		1	3, 7		02, 06				
		1	3, 7		12, 15, 16				
4									TERMINAL
	5103 880AA	99	2, 6		01, 02, 06				
		99	2, 6		11, 12, 14, 15, 16				

Refer to Model Legend Information Bookmark

AR = Use as required - = Non illustrated part # = New this model year

March 3, 2006

« RETURN TO GROUP INDEX

»

Master Cylinder
Figure 005-410

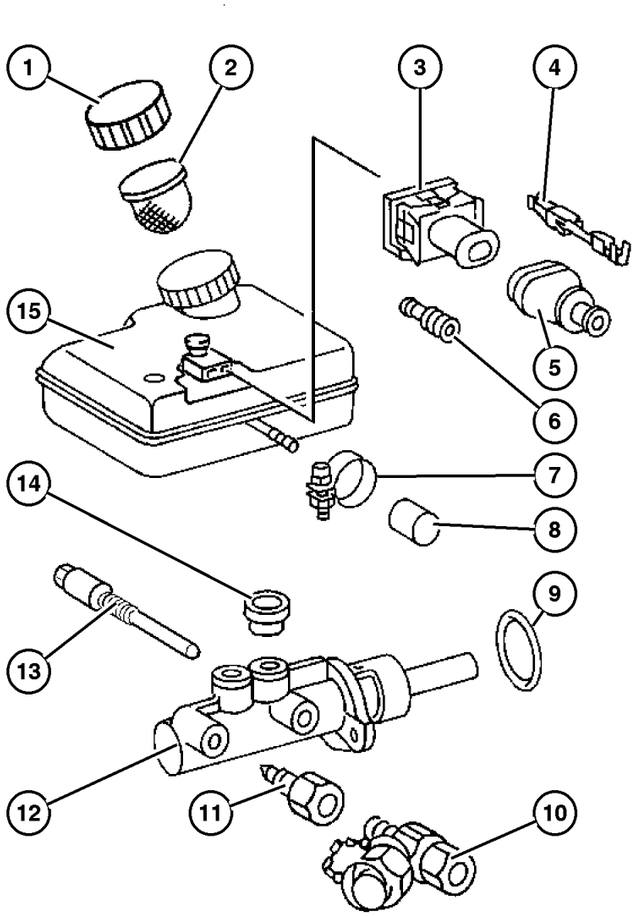

ITEM	PART NUMBER	QTY	LINE	SERIES	BODY	ENGINE	TRANS	TRIM	DESCRIPTION
		99	2, 6		51, 52,				
					54, 55,				
					56				
		99	3, 7		02, 06				
		99	3, 7		12, 15,				
					16				
5									BOOT
	5120 881AA	1	2, 6		01, 02,				
					06				
		1	2, 6		11, 12,				
					14, 15,				
					16				
		1	2, 6		51, 52,				
					54, 55,				
					56				
		1	3, 7		02, 06				
		1	3, 7		12, 15,				
					16				
6									GASKET
	5103 661AA	1	2, 6		01, 02,				
					06				
		1	2, 6		11, 12,				
					14, 15,				
					16				
		1	2, 6		51, 52,				
					54, 55,				
					56				
		1	3, 7		02, 06				
		1	3, 7		12, 15,				
					16				
7									CLAMP
	5080 440AB	1	2, 6		01, 02,				
					06				
		1	2, 6		11, 12,				
					14, 15,				
					16				
		1	2, 6		51, 52,				
					54, 55,				
					56				
		1	3, 7		02, 06				
		1	3, 7		12, 15,				
					16				
8									CAP
	5119 387AA	1	2, 6		01, 02,				
					06				

Refer to Model Legend Information Bookmark

Master Cylinder
Figure 005-410

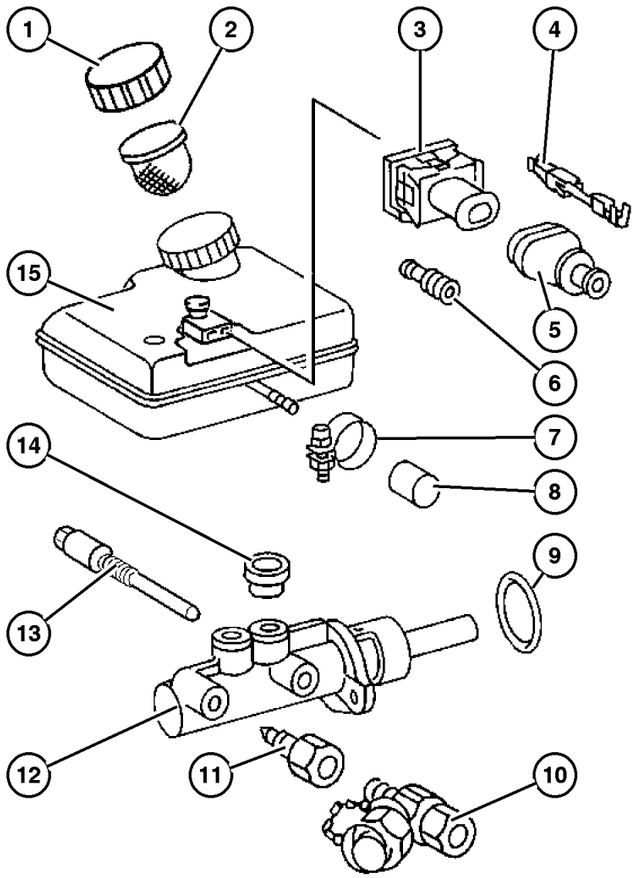

ITEM	PART NUMBER	QTY	LINE	SERIES	BODY	ENGINE	TRANS	TRIM	DESCRIPTION
		1	2, 6		11, 12, 14, 15, 16				
		1	2, 6		51, 52, 54, 55, 56				
		1	3, 7		02, 06				
		1	3, 7		12, 15, 16				
9									GASKET
	5133 696AA	1	2, 6		01, 02, 06				
		1	2, 6		11, 12, 14, 15, 16				
		1	2, 6		51, 52, 54, 55, 56				
		1	3, 7		02, 06				
		1	3, 7		12, 15, 16				
10									TEST CONNECTION, Master Cylinder
	5103 640AA	2	2, 6		01, 02, 06				
		2	2, 6		11, 12, 14, 15, 16				
		2	2, 6		51, 52, 54, 55, 56				
		2	3, 7		02, 06				
		2	3, 7		12, 15, 16				
11									FITTING, (NOT SERVICED) (Not Serviced)
12									CYLINDER, Brake Master
	5119 354AA	1	2, 6		01, 02, 06				With [4DR]
	5119 355AA	1	2, 6		01, 02, 06				Without [4DR]
	5119 354AA	1	2, 6		11, 12, 14, 15, 16				With [4DR]

Refer to Model Legend Information Bookmark

AR = Use as required - = Non illustrated part # = New this model year

March 3, 2006

« RETURN TO GROUP INDEX

Master Cylinder
Figure 005-410

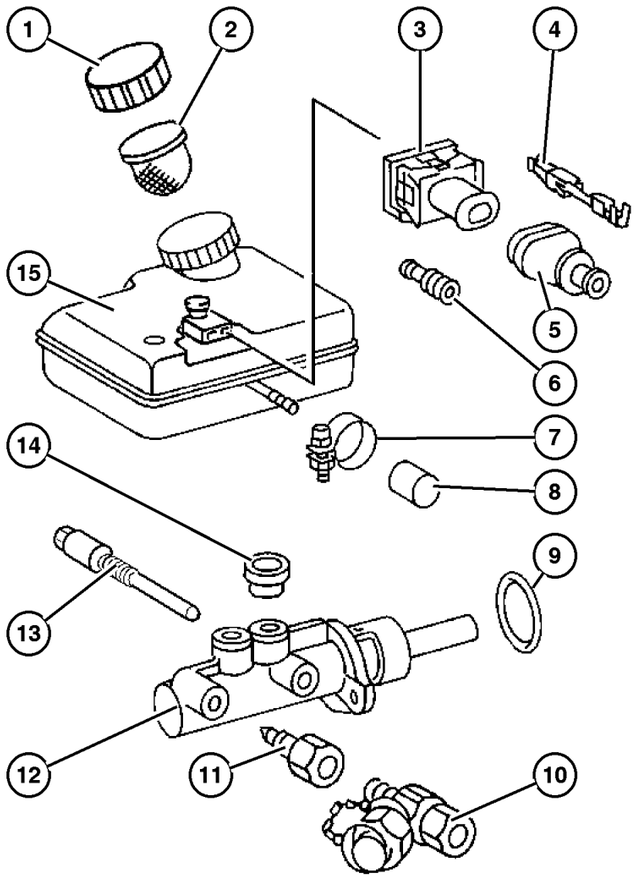

ITEM	PART NUMBER	QTY	LINE	SERIES	BODY	ENGINE	TRANS	TRIM	DESCRIPTION
	5119 355AA	1	2, 6		11, 12, 14, 15, 16				Without [4DR]
	5119 354AA	1	2, 6		51, 52, 54, 55, 56				With [4DR]
	5119 355AA	1	2, 6		51, 52, 54, 55, 56				Without [4DR]
	5119 354AA	1	3, 7		12, 15, 16				
		1	3, 7		02, 06				
13									SCREW, (NOT SERVICED) (Not Serviced)
14	5103 637AA	2							SEAL, Brake Cylinder To Reservoir
15									RESERVOIR, Brake Master Cylinder
	5119 356AA	1	2, 6		01, 02, 06				
		1	2, 6		11, 12, 14, 15, 16				
		1	2, 6		51, 52, 54, 55, 56				
		1	3, 7		02, 06				
		1	3, 7		12, 15, 16				

Refer to Model Legend Information Bookmark

AR = Use as required - = Non illustrated part # = New this model year

March 3, 2006

« RETURN TO GROUP INDEX

Hydraulic Control Unit and ABS Module
Figure 005-420

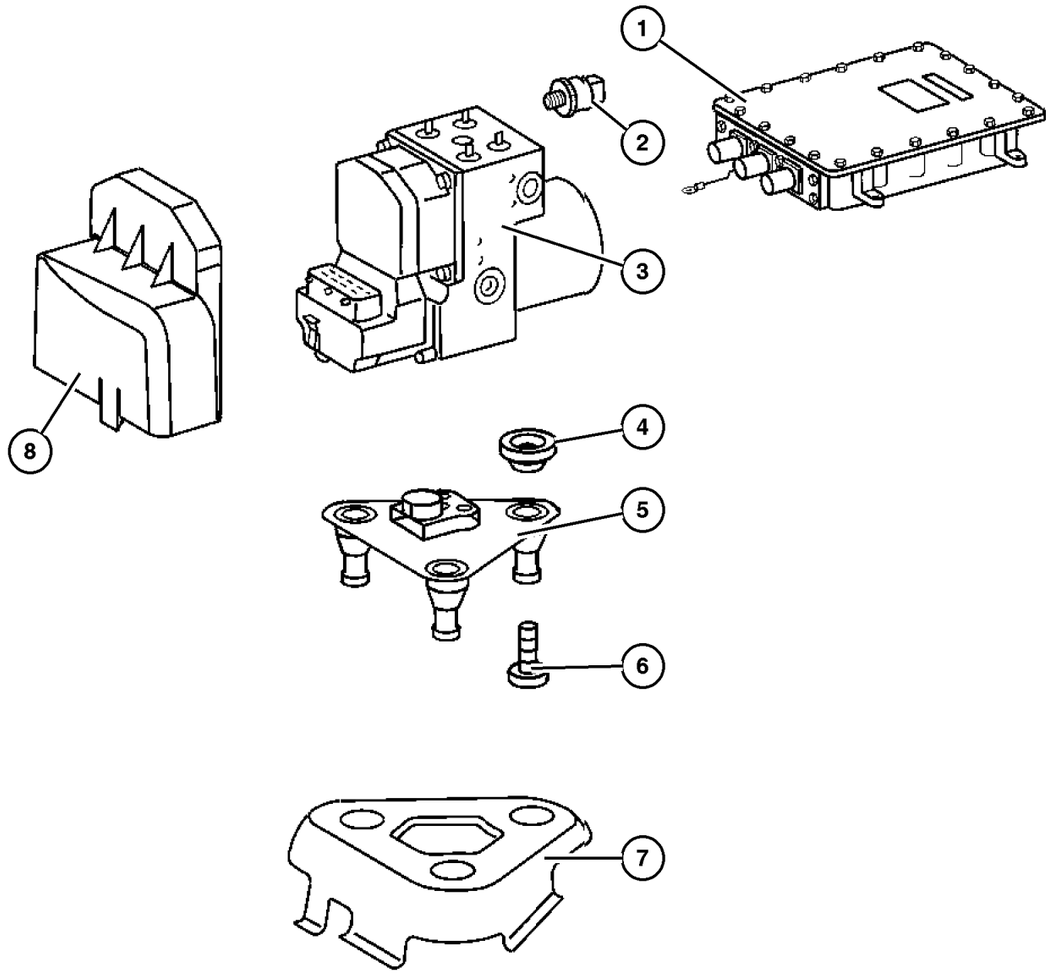

ITEM	PART NUMBER	QTY	LINE	SERIES	BODY	ENGINE	TRANS	TRIM	DESCRIPTION
Note;Sales Codes									
[BGK]=4-Wheel Anti-Lock Brakes									
[BNB]=Electronic Stability Program									
[HBD]=Rear Heavy Duty Air Conditioning									
[4DR]=Weight Variant 3.88T									
1									MODULE, Anti-lock Brakes
	5133 700AA	1	2, 6		01, 02, 06				Without [BNB]
	5161 052AA	1	2, 6		01, 02, 06				With [BNB]
	5133 700AA	1	2, 6		11, 12, 14, 15, 16				
		1	2, 6		51, 52, 54, 55, 56				
2									SENDING UNIT
	5133 702AA	1	3, 7		02, 06				
		1	3, 7		12, 15, 16				
3									CONTROL UNIT, Anti-Lock Brake
	5127 536AA	1	2, 6		01, 02, 06				[BGK]
		1	2, 6		11, 12, 14, 15, 16				[BGK]
		1	2, 6		51, 52, 54, 55, 56				[BGK]
	5161 051AA	1	2, 6		01, 02, 06				[BGK,BNB]
	5136 077AA	1	2, 6		11, 12, 14, 15, 16				[BGK,BNB]
		1	2, 6		51, 52, 54, 55, 56				[BGK,BNB]
	5127 538AA	1	2, 6		01, 02, 06				[BGK,4DR]
		1	2, 6		11, 12, 14, 15, 16				[BGK,4DR]
		1	2, 6		51, 52, 54, 55, 56				[BGK,4DR]

Refer to Model Legend Information Bookmark

Hydraulic Control Unit and ABS Module
Figure 005-420

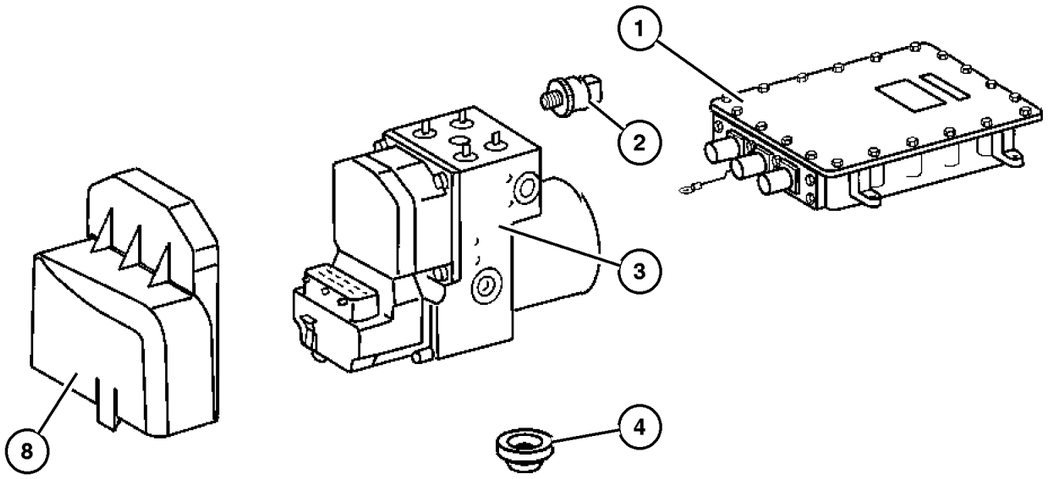

ITEM	PART NUMBER	QTY	LINE	SERIES	BODY	ENGINE	TRANS	TRIM	DESCRIPTION
	5140 695AB	1	2, 6		01, 02,				[BGK,BNB,4DR]
					06				
		1	2, 6		11, 12,				[BGK,BNB,4DR]
					14, 15,				
					16				
		1	2, 6		51, 52,				[BGK,BNB,4DR]
					54, 55,				
					56				
	5127 536AA	1	3, 7		02, 06				[BGK]
		1	3, 7		12, 15,				[BGK]
					16				
4									GROMMET, Hydraulic Control Unit
	5099 283AA	3	2, 6		01, 02,				
					06				
		3	2, 6		11, 12,				
					14, 15,				
					16				
		3	2, 6		51, 52,				
					54, 55,				
					56				
		3	3, 7		02, 06				
		3	3, 7		12, 15,				
					16				
5									BRACKET, hydraulic control unit, upper
	5119 383AA	1	2, 6		01, 02,				
					06				
		1	2, 6		11, 12,				
					14, 15,				
					16				
		1	2, 6		51, 52,				
					54, 55,				
					56				
		1	3, 7		02, 06				
		1	3, 7		12, 15,				
					16				
6									SCREW
	5126 138AA	2	2, 6		01, 02,				
					06				
		2	2, 6		11, 12,				
					14, 15,				
					16				
		2	2, 6		51, 52,				
					54, 55,				
					56				

Refer to Model Legend Information Bookmark

Hydraulic Control Unit and ABS Module
Figure 005-420

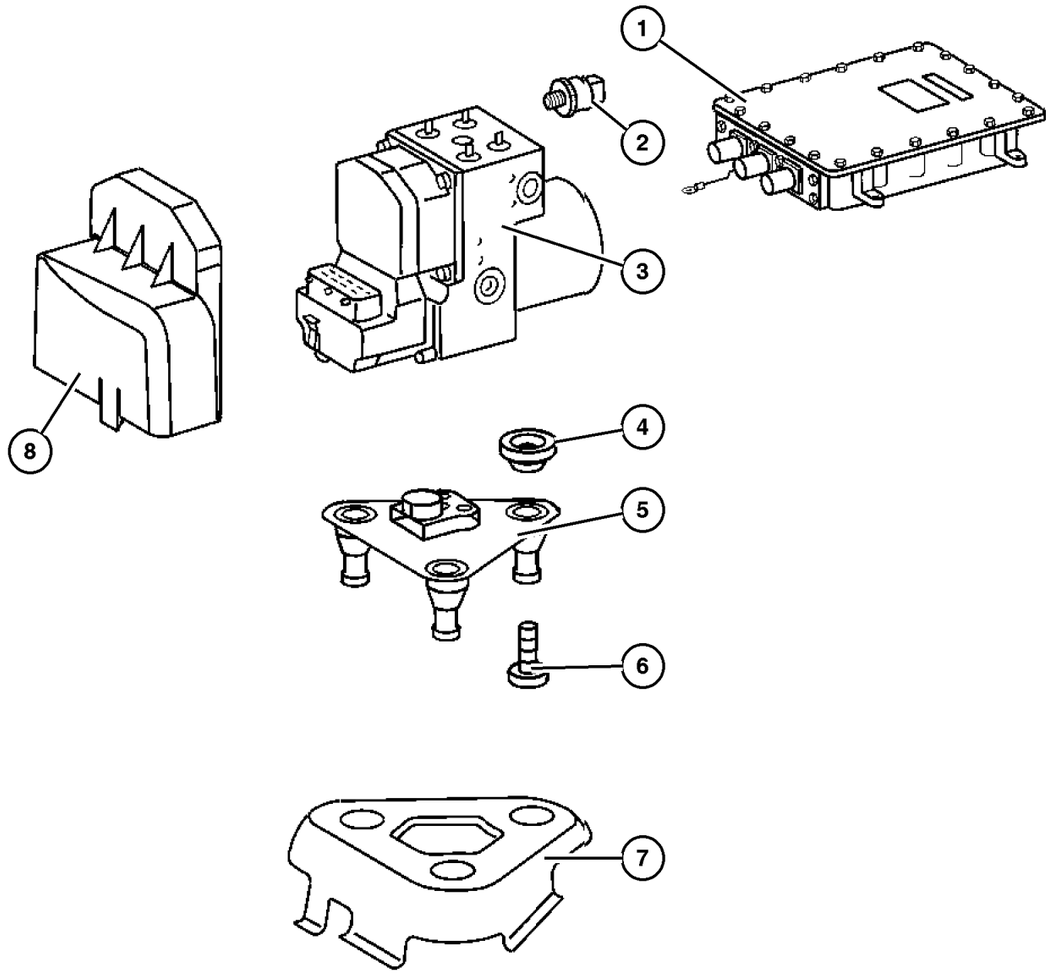

ITEM	PART NUMBER	QTY	LINE	SERIES	BODY	ENGINE	TRANS	TRIM	DESCRIPTION
		2	3, 7		02, 06				
		2	3, 7		12, 15, 16				
7									BRACKET, hydraulic control unit, lower
	5104 088AA	1	2, 6		01, 02, 06				[BGK]
		1	2, 6		11, 12, 14, 15, 16				[BGK]
		1	2, 6		51, 52, 54, 55, 56				[BGK]
		1	3, 7		02, 06				[BGK]
		1	3, 7		12, 15, 16				[BGK]
	5139 489AA	1	2, 6		11, 12, 14, 15, 16				[BGK,HBD]
		1	2, 6		51, 52, 54, 55, 56				[BGK,HBD]
		1	3, 7		12, 15, 16				[BGK,HBD]
8									COVER, Hydraulic Control Unit
	5120 888AA	1	2, 6		01, 02, 06				
		1	2, 6		11, 12, 14, 15, 16				
		1	2, 6		51, 52, 54, 55, 56				
		1	3, 7		02, 06				
		1	3, 7		12, 15, 16				

Refer to Model Legend Information Bookmark

AR = Use as required - = Non illustrated part # = New this model year

March 3, 2006

« RETURN TO GROUP INDEX

Lines,Brake,With ABS,2500/3500 Series
Figure 005-510

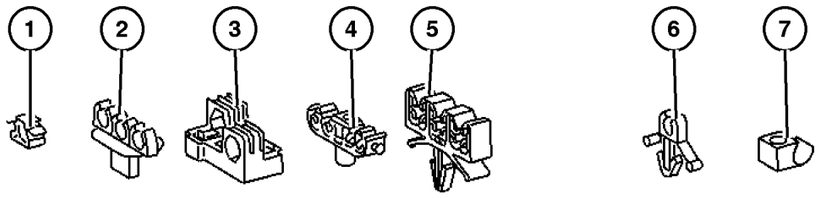

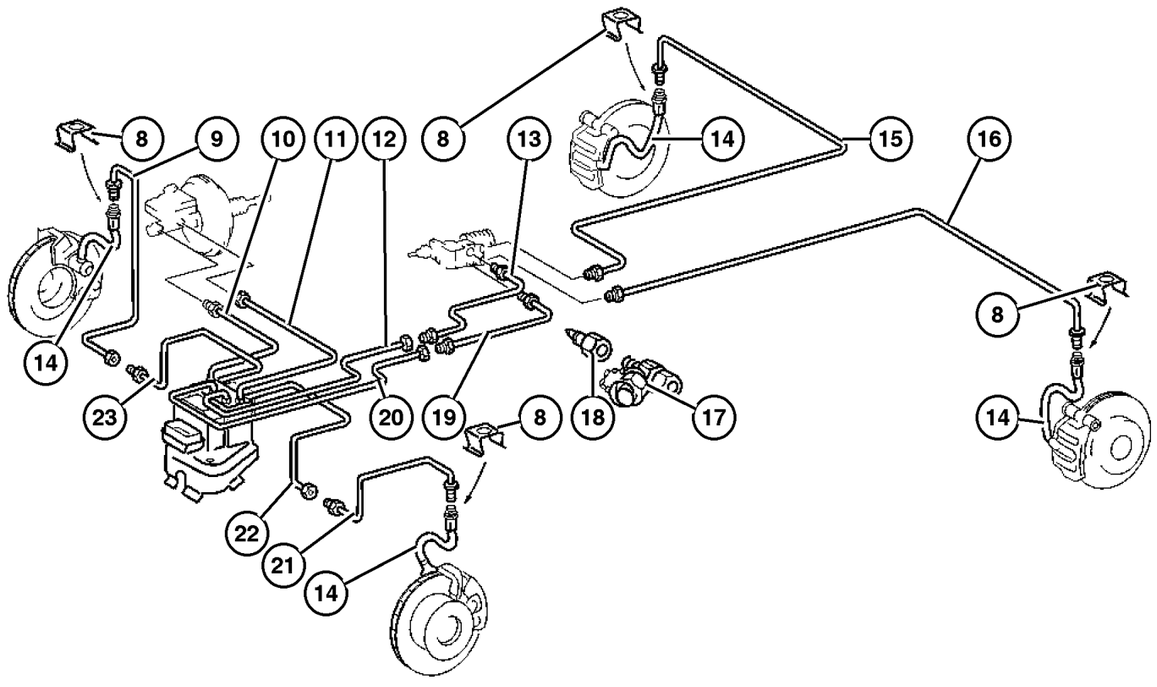

ITEM	PART NUMBER	QTY	LINE	SERIES	BODY	ENGINE	TRANS	TRIM	DESCRIPTION
Note;Sales Codes;									
[WDG]=Wheels - 16 X 6 STEEL									
[3S6]=Test Connections Hydraulic Brake									
[5AC]=118" Wheelbase									
[5AE]=140" Wheelbase									
[5AF]=158" Wheelbase									
[5NZ]=Delete Load Sensitive Brake									
1									CLIP, Brake Line
	5119 689AA	4	2, 6		01, 02, 06				
		4	2, 6		11, 12, 14, 15, 16				
		4	2, 6		51, 52, 54, 55, 56				
		4	3, 7		02, 06				
		4	3, 7		12, 15, 16				
2									CLIP, Brake Line
	5135 743AA	1	2, 6		11, 12, 14, 15, 16				
		1	2, 6		51, 52, 54, 55, 56				
3									BRACKET, Brake Tube
	5119 331AA	1	2, 6		01, 02, 06				
		1	2, 6		11, 12, 14, 15, 16				
		1	2, 6		51, 52, 54, 55, 56				
		1	3, 7		02, 06				
		1	3, 7		12, 15, 16				
4									CLIP, Brake Line
	5119 330AA	2	2, 6		01, 02, 06				
		2	2, 6		11, 12, 14, 15, 16				

Refer to Model Legend Information Bookmark

AR = Use as required - = Non illustrated part # = New this model year

March 3, 2006

« RETURN TO GROUP INDEX

»

Lines,Brake,With ABS,2500/3500 Series
Figure 005-510

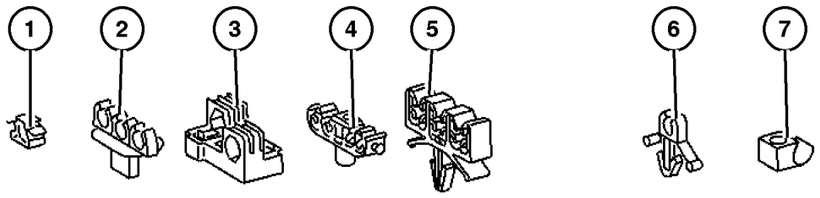

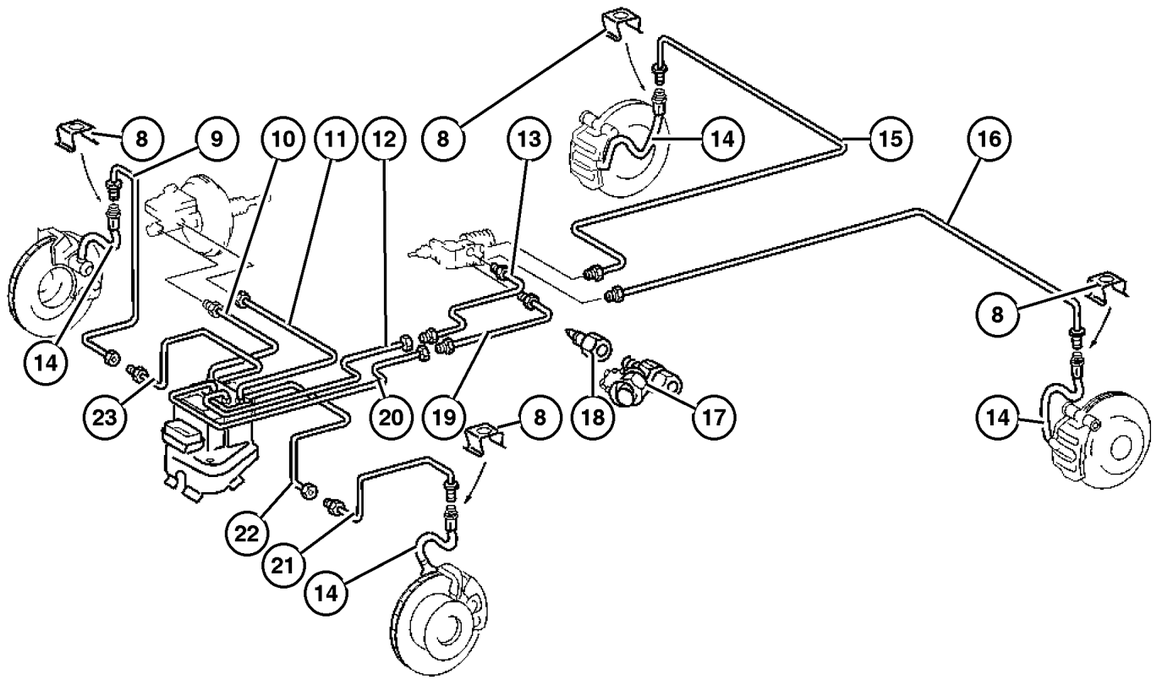

ITEM	PART NUMBER	QTY	LINE	SERIES	BODY	ENGINE	TRANS	TRIM	DESCRIPTION
		2	2, 6		51, 52,				
					54, 55,				
					56				
		2	3, 7		02, 06				
		2	3, 7		12, 15,				
					16				
5									CLIP, Brake Line
	5119 328AA	1	2, 6		01, 02,				
					06				
		1	2, 6		11, 12,				
					14, 15,				
					16				
		1	2, 6		51, 52,				
					54, 55,				
					56				
		1	3, 7		02, 06				
		1	3, 7		12, 15,				
					16				
6									CLIP, Brake Line
	5119 329AA	1	2, 6		01, 02,				
					06				
		1	2, 6		11, 12,				
					14, 15,				
					16				
		1	2, 6		51, 52,				
					54, 55,				
					56				
		1	3, 7		02, 06				
		1	3, 7		12, 15,				
					16				
7									CLIP, Brake Line
	5125 566AA	1	2, 6		01, 02,				
					06				
		1	2, 6		11, 12,				
					14, 15,				
					16				
		1	2, 6		51, 52,				
					54, 55,				
					56				
		1	3, 7		02, 06				
		1	3, 7		12, 15,				
					16				
8									CLIP, Spring
	5098 140AA	2	2, 6		01, 02,				Front or Rear, Right or Left
					06				

Refer to Model Legend Information Bookmark

Lines,Brake,With ABS,2500/3500 Series
Figure 005-510

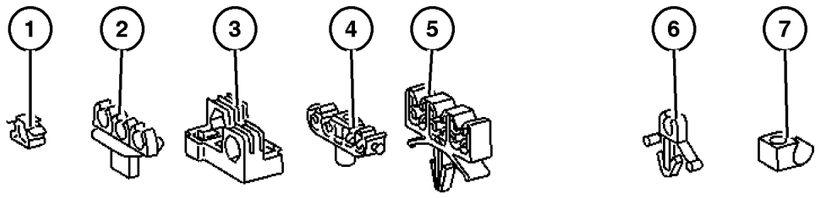

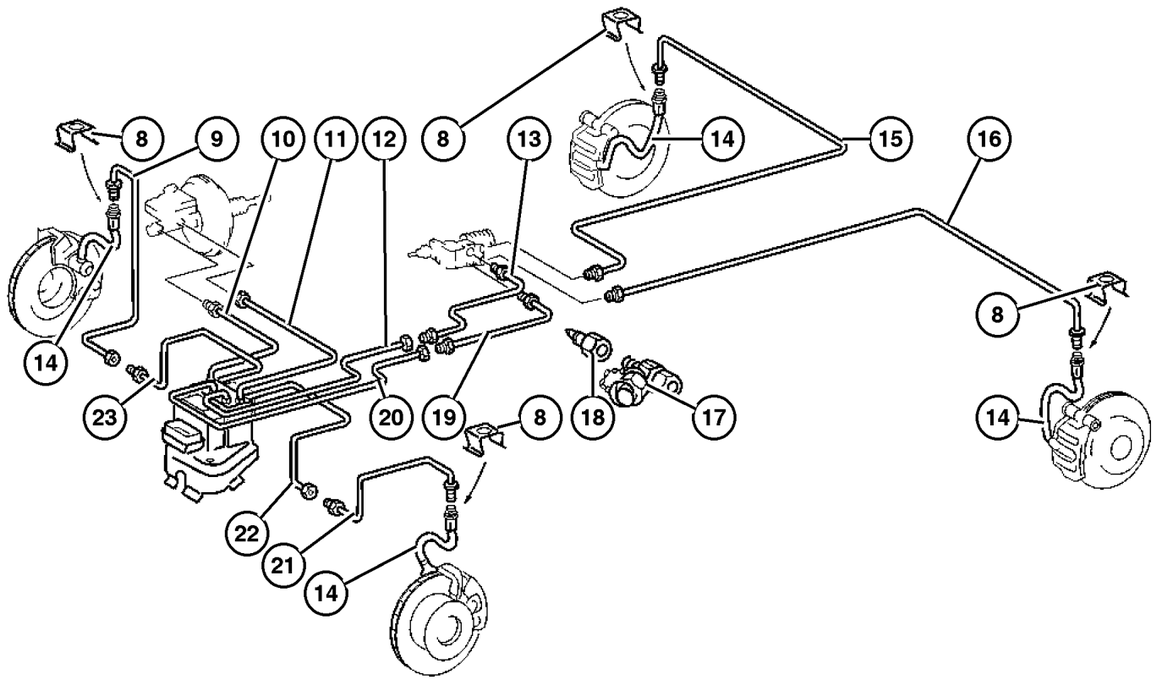

ITEM	PART NUMBER	QTY	LINE	SERIES	BODY	ENGINE	TRANS	TRIM	DESCRIPTION
		2	2, 6		11, 12, 14, 15, 16				Front or Rear, Right or Left
		2	2, 6		51, 52, 54, 55, 56				Front or Rear, Right or Left
		2	3, 7		02, 06				Front or Rear, Right or Left
		2	3, 7		12, 15, 16				Front or Rear, Right or Left
9									TUBE, Brake
	5119 198AA	1	2, 6		01, 02, 06				[BGK,BNB], Right Front
		1	2, 6		11, 12, 14, 15, 16				[BGK,BNB], Right Front
		1	2, 6		51, 52, 54, 55, 56				[BGK,BNB], Right Front
	5119 163AA	1	2, 6		01, 02, 06				[BGK,BNB,WDG], Right Front
		1	2, 6		11, 12, 14, 15, 16				[BGK,BNB,WDG], Right Front
		1	2, 6		51, 52, 54, 55, 56				[BGK,BNB,WDG], Right Front
		1	3, 7		02, 06				[BGK], Right Front
		1	3, 7		12, 15, 16				[BGK], Right Front
10									TUBE, Brake
	5119 217AA	1	2, 6		01, 02, 06				Secondary
		1	2, 6		11, 12, 14, 15, 16				Secondary
		1	2, 6		51, 52, 54, 55, 56				Secondary
		1	3, 7		02, 06				Secondary
		1	3, 7		12, 15, 16				Secondary
11									TUBE, Brake
	5119 217AA	1	2, 6		01, 02, 06				Primary

Refer to Model Legend Information Bookmark

AR = Use as required - = Non illustrated part # = New this model year

March 3, 2006

Lines,Brake,With ABS,2500/3500 Series
Figure 005-510

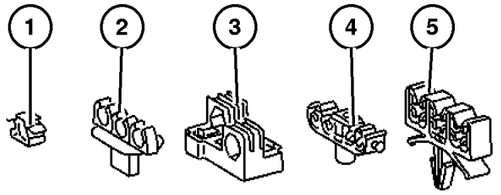

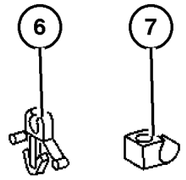

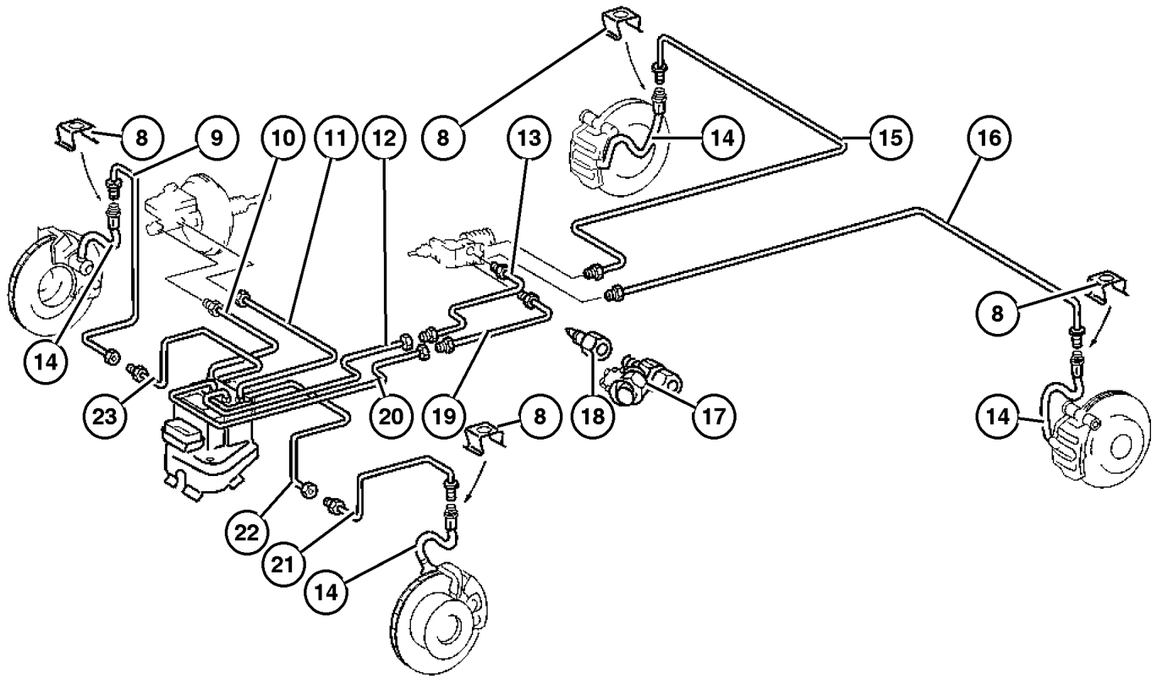

ITEM	PART NUMBER	QTY	LINE	SERIES	BODY	ENGINE	TRANS	TRIM	DESCRIPTION
		1	2, 6		11, 12, 14, 15, 16				Primary
		1	2, 6		51, 52, 54, 55, 56				Primary
		1	3, 7		02, 06				Primary
		1	3, 7		12, 15, 16				Primary
12									TUBE, Brake
	5119 197AA	1	2, 6		01, 02, 06				
		1	2, 6		11, 12, 14, 15, 16				
		1	2, 6		51, 52, 54, 55, 56				
		1	3, 7		02, 06				
		1	3, 7		12, 15, 16				
13									TUBE, Brake
	5133 704AA	1	2, 6		01				[+BGK]
	5133 709AA	1	2, 6		01				[+5NZ]
		1	2, 6		02				[+BGK]
	5133 728AA	1	2, 6		02				[+5NZ]
		1	2, 6		06				[+BGK]
	5133 704AA	1	2, 6		11, 14				[+BGK]
	5133 709AA	1	2, 6		11, 14				[+5NZ]
		1	2, 6		12, 15				[+BGK]
	5133 728AA	1	2, 6		12, 15				[+5NZ]
		1	2, 6		16				[+BGK]
	5133 704AA	1	2, 6		51, 54				[+BGK]
	5133 709AA	1	2, 6		51, 54				[+5NZ]
		1	2, 6		52, 55				[+BGK]
	5133 728AA	1	2, 6		52, 55				[+5NZ]
		1	2, 6		56				[+BGK]
	5133 709AA	1	3, 7		02				[-BGK]
		1	3, 7		02				[+BGK]
		1	3, 7		12, 15				[-BGK]
		1	3, 7		12, 15				[+BGK]
14									HOSE, Brake
	5104 087AA	1	2, 6		01, 02, 06				Left or Right, Front or Rear

Refer to Model Legend Information Bookmark

AR = Use as required - = Non illustrated part # = New this model year

March 3, 2006

Lines,Brake,With ABS,2500/3500 Series
Figure 005-510

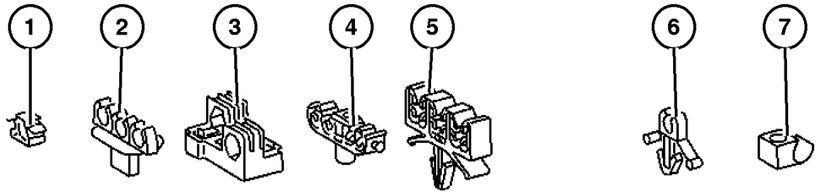

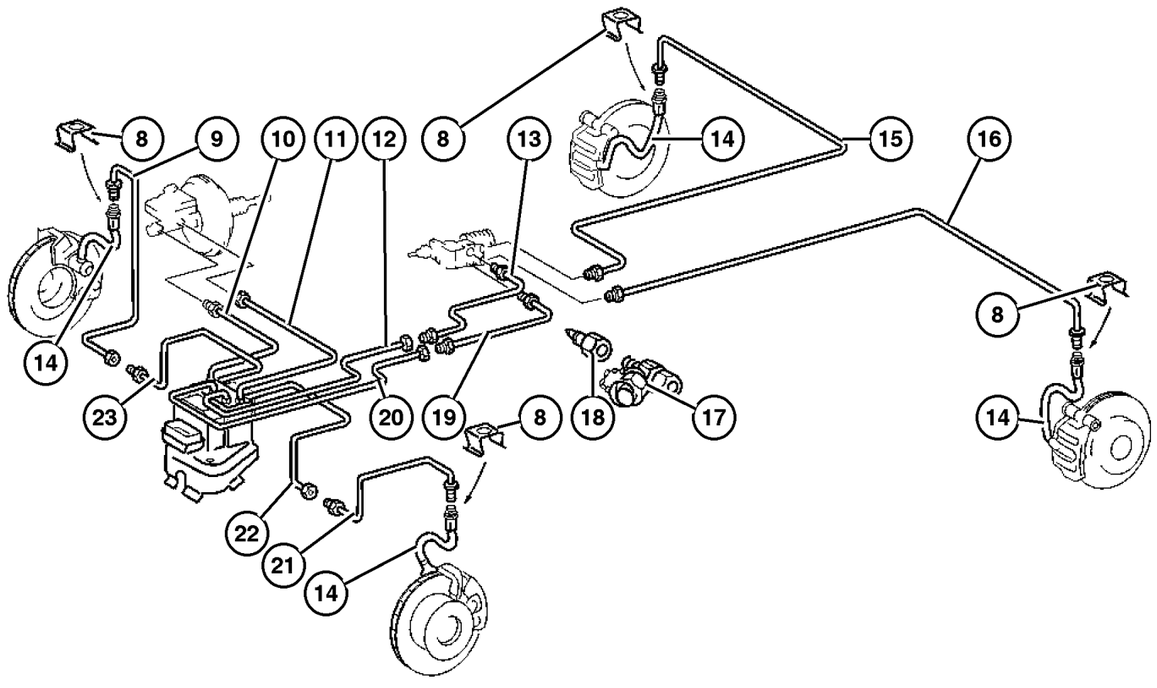

ITEM	PART NUMBER	QTY	LINE	SERIES	BODY	ENGINE	TRANS	TRIM	DESCRIPTION
		1	2, 6		11, 12, 14, 15, 16				Left or Right, Front or Rear
		1	2, 6		51, 52, 54, 55, 56				Left or Right, Front or Rear
		1	3, 7		02, 06				Left or Right, Front or Rear
		1	3, 7		12, 15, 16				Left or Right, Front or Rear
15									TUBE, Brake
	5133 712AA	1	2, 6		01, 02, 06				[-5NZ], Right Rear
	5133 710AA	1	2, 6		01				[+5NZ], Right Rear
	5133 730AA	1	2, 6		02				[+5NZ], Right Rear
	5133 731AA	1	2, 6		06				[+5NZ], Right Rear
	5133 712AA	1	2, 6		11, 12, 14, 15, 16				[-5NZ], Right Rear
	5133 710AA	1	2, 6		11, 14				[+5NZ], Right Rear
	5133 730AA	1	2, 6		12, 15				[+5NZ], Right Rear
	5133 731AA	1	2, 6		16				[+5NZ], Right Rear
	5133 712AA	1	2, 6		51, 52, 54, 55, 56				[-5NZ], Right Rear
	5133 710AA	1	2, 6		51, 54				[+5NZ], Right Rear
	5133 730AA	1	2, 6		52, 55				[+5NZ], Right Rear
	5133 731AA	1	2, 6		56				[+5NZ], Right Rear
	5133 712AA	1	3, 7		02, 06				Right Rear
	5133 710AA	1	3, 7		06				Right Rear
	5133 712AA	1	3, 7		12, 15, 16				Right Rear
	5133 710AA	1	3, 7		16				Right Rear
16									TUBE, Brake
	5133 732AA	1	2, 6		01, 02, 06				[-5NZ], Left Rear
	5133 709AA	1	2, 6		01				[+5NZ], Left Rear
	5133 728AA	1	2, 6		02				[+5NZ], Left Rear
	5133 729AA	1	2, 6		06				[+5NZ], Left Rear
	5133 732AA	1	2, 6		11, 12, 14, 15, 16				[-5NZ], Left Rear
	5133 709AA	1	2, 6		11, 14				[+5NZ], Left Rear
	5133 728AA	1	2, 6		12, 15				[+5NZ], Left Rear
	5133 729AA	1	2, 6		16				[+5NZ], Left Rear

Refer to Model Legend Information Bookmark

Lines,Brake,With ABS,2500/3500 Series
Figure 005-510

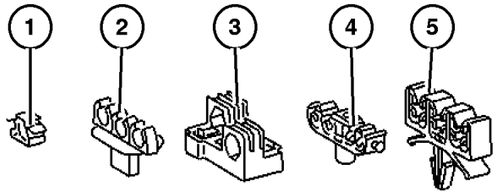

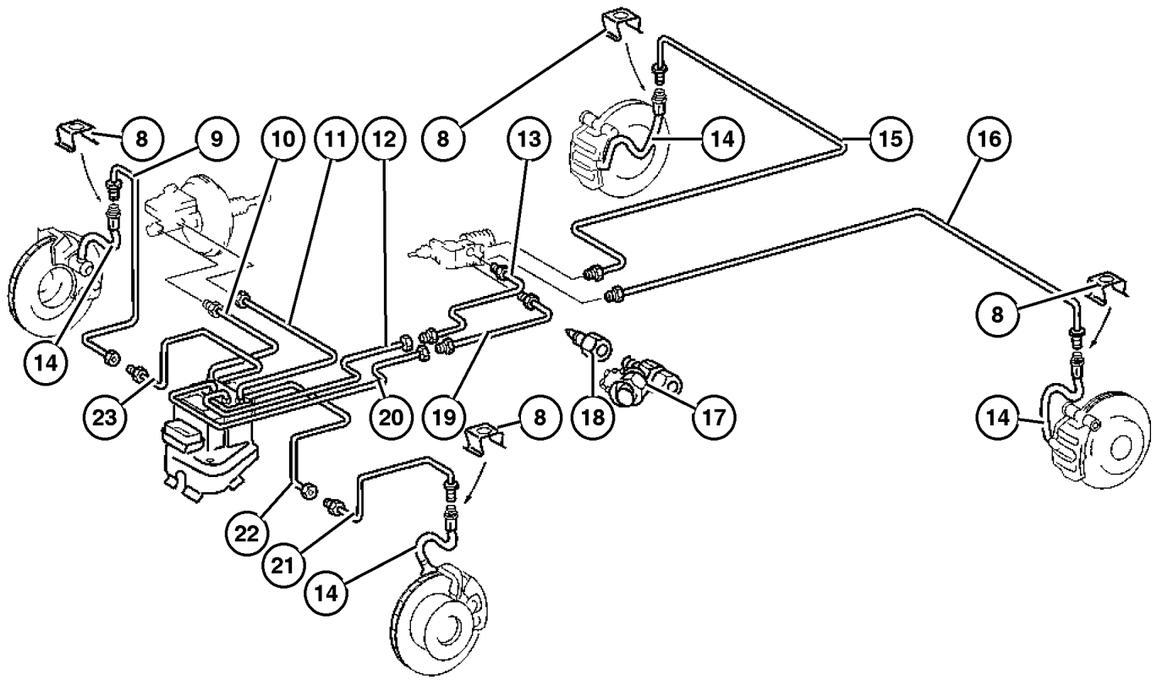

ITEM	PART NUMBER	QTY	LINE	SERIES	BODY	ENGINE	TRANS	TRIM	DESCRIPTION
	5133 732AA	1	2, 6		51, 52, 54, 55, 56				[-5NZ], Left Rear
	5133 709AA	1	2, 6		51, 54				[+5NZ], Left Rear
	5133 728AA	1	2, 6		52, 55				[+5NZ], Left Rear
	5133 729AA	1	2, 6		56				[+5NZ], Left Rear
	5133 709AA	1	2, 6		02				[+BGK], Left Rear
	5133 728AA	1	2, 6		06				[+BGK], Left Rear
	5133 709AA	1	2, 6		12, 15				[+BGK], Left Rear
	5133 728AA	1	2, 6		16				[+BGK], Left Rear
	5133 709AA	1	2, 6		52, 55				[+BGK], Left Rear
	5133 728AA	1	2, 6		56				[+BGK], Left Rear
	5133 709AA	1	3, 7		02				Left Rear
		1	3, 7		12, 15				Left Rear
17									TEST CONNECTION, Master Cylinder
	5103 640AA	2	2, 6		01, 02, 06				[3S6]
		2	2, 6		11, 12, 14, 15, 16				[3S6]
		2	2, 6		51, 52, 54, 55, 56				[3S6]
		1	3, 7		02, 06				[3S6]
		2	3, 7		02, 06				[3S6+BGK]
		1	3, 7		12, 15, 16				[3S6]
		2	3, 7		12, 15, 16				[3S6+BGK]
18	5103 636AA	2	2, 6		01, 02, 06				FITTING, Orifice [3S6]
		2	2, 6		11, 12, 14, 15, 16				[3S6]
		2	2, 6		51, 52, 54, 55, 56				[3S6]
		1	3, 7		02, 06				[3S6]
		2	3, 7		02, 06				[3S6+BGK]
		1	3, 7		12, 15, 16				[3S6]
		2	3, 7		12, 15, 16				[3S6+BGK]
19									TUBE, Brake

Refer to Model Legend Information Bookmark

AR = Use as required - = Non illustrated part # = New this model year

March 3, 2006

Lines,Brake,With ABS,2500/3500 Series
Figure 005-510

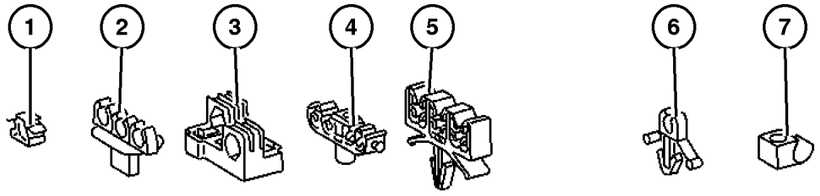

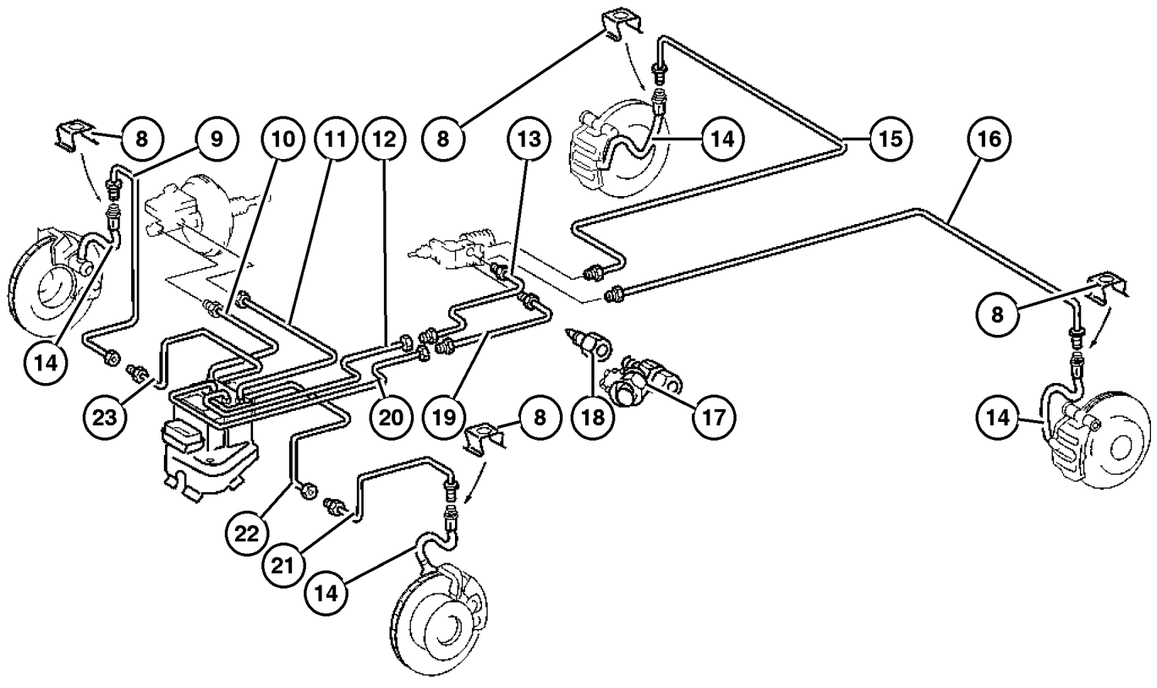

ITEM	PART NUMBER	QTY	LINE	SERIES	BODY	ENGINE	TRANS	TRIM	DESCRIPTION
	5133 709AA	1	2, 6		01				[+5NZ]
	5133 728AA	1	2, 6		02				[+5NZ]
	5133 709AA	1	2, 6		11, 14				[+5NZ]
	5133 728AA	1	2, 6		12, 15				[+5NZ]
	5133 709AA	1	2, 6		51, 54				[+5NZ]
	5133 728AA	1	2, 6		52, 55				[+5NZ]
	5133 704AA	1	2, 6		01				[+BGK]
	5133 709AA	1	2, 6		02				[+BGK]
	5133 728AA	1	2, 6		06				[+BGK]
	5133 704AA	1	2, 6		11, 14				[+BGK]
	5133 709AA	1	2, 6		12, 15				[+BGK]
	5133 728AA	1	2, 6		16				[+BGK]
	5133 704AA	1	2, 6		51, 54				[+BGK]
	5133 709AA	1	2, 6		52, 55				[+BGK]
	5133 728AA	1	2, 6		56				[+BGK]
	5133 709AA	1	3, 7		02				[+BGK]
		1	3, 7		02				[-BGK]
		1	3, 7		12, 15				[+BGK]
20									TUBE, Brake
	5119 196AA	1	2, 6		01, 02, 06				[BGK,BNB]
		1	2, 6		11, 12, 14, 15, 16				[BGK,BNB]
		1	2, 6		51, 52, 54, 55, 56				[BGK,BNB]
		1	3, 7		02, 06				[BGK]
		1	3, 7		12, 15, 16				[BGK]
21									TUBE, Brake
	5119 185AA	1	2, 6		01, 02, 06				[BGK,BNB]
		1	2, 6		11, 12, 14, 15, 16				[BGK,BNB]
		1	2, 6		51, 52, 54, 55, 56				[BGK,BNB]
	5119 160AA	1	2, 6		01, 02, 06				[BGK,BNB,WDG]
		1	2, 6		11, 12, 14, 15, 16				[BGK,BNB,WDG]

Refer to Model Legend Information Bookmark

AR = Use as required - = Non illustrated part # = New this model year

March 3, 2006

« RETURN TO GROUP INDEX

Lines,Brake,With ABS,2500/3500 Series
Figure 005-510

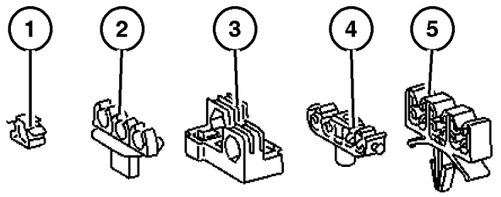

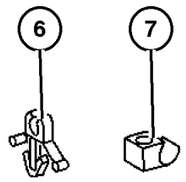

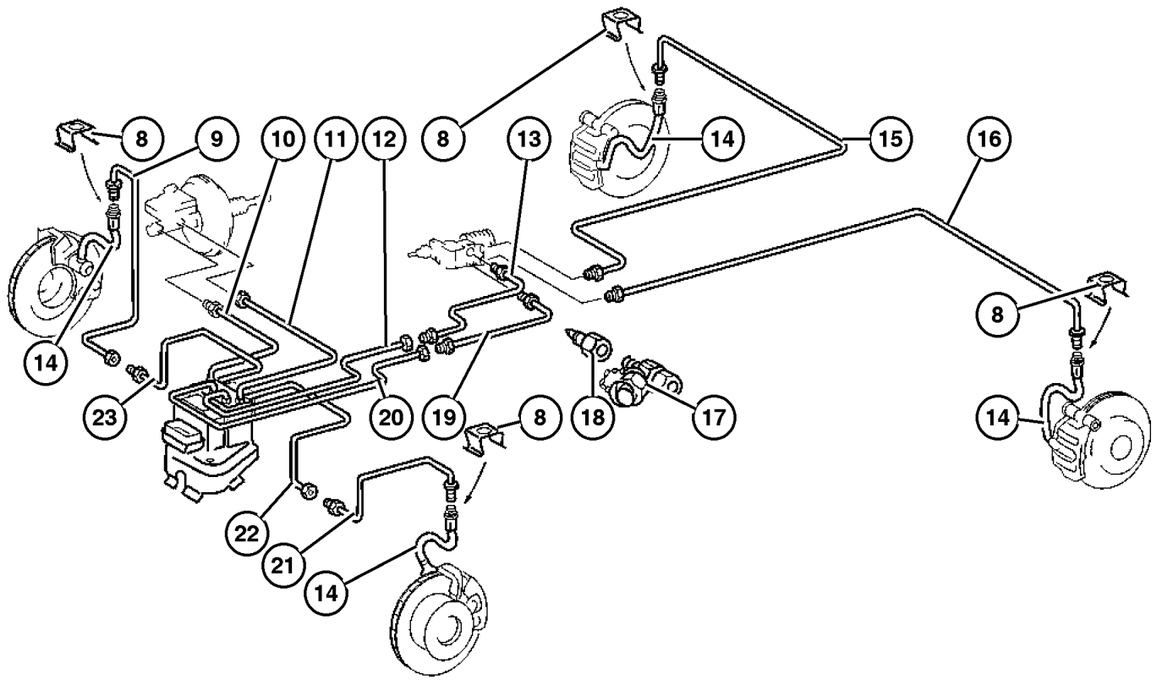

ITEM	PART NUMBER	QTY	LINE	SERIES	BODY	ENGINE	TRANS	TRIM	DESCRIPTION
		1	2, 6		51, 52, 54, 55, 56				[BGK,BNB,WDG]
		1	3, 7		02, 06				[BGK]
		1	3, 7		12, 15, 16				[BGK]
22									TUBE, Brake
	5133 706AA	1	2, 6		01, 02, 06				[BGK,BNB], Left Front
		1	2, 6		11, 12, 14, 15, 16				[BGK,BNB], Left Front
		1	2, 6		51, 52, 54, 55, 56				[BGK,BNB], Left Front
		1	3, 7		02, 06				[BGK], Left Front
		1	3, 7		12, 15, 16				[BGK], Left Front
23									TUBE, Brake
	5133 708AA	1	2, 6		01, 02, 06				
		1	2, 6		11, 12, 14, 15, 16				
		1	2, 6		51, 52, 54, 55, 56				
		1	3, 7		02, 06				
		1	3, 7		12, 15, 16				
-24									UNION, Brake Line Repair
	5098 485AA-	1	2, 6		01, 02, 06				
		1	2, 6		11, 12, 14, 15, 16				
		1	2, 6		51, 52, 54, 55, 56				
		1	3, 7		02, 06				
		1	3, 7		12, 15, 16				

Refer to Model Legend Information Bookmark

AR = Use as required - = Non illustrated part # = New this model year

March 3, 2006

« RETURN TO GROUP INDEX

Brake, Power Regulator
Figure 005-520

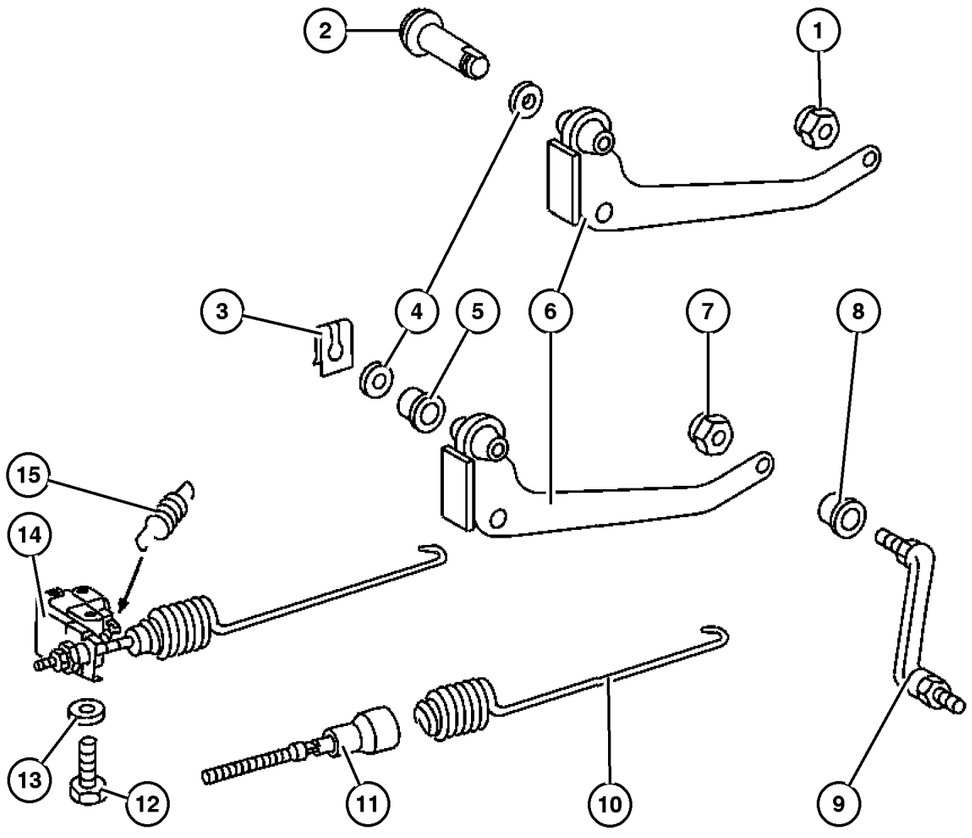

ITEM	PART NUMBER	QTY	LINE	SERIES	BODY	ENGINE	TRANS	TRIM	DESCRIPTION
1	5097 684AA	2	2, 3, 6, 7						NUT
2									PIN
	5119 385AA	1	3, 7		02, 06				
		1	3, 7		12, 15, 16				
3									CLIP, Retaining
	5126 244AA	1	2, 6		01, 02, 06				
		1	2, 6		11, 12, 14, 15, 16				
		1	2, 6		51, 52, 54, 55, 56				
		1	3, 7		02, 06				
		1	3, 7		12, 15, 16				
4									WASHER
	5133 725AA	1	2, 6		01, 02, 06				
		1	2, 6		11, 12, 14, 15, 16				
		1	2, 6		51, 52, 54, 55, 56				
		1	3, 7		02, 06				
		1	3, 7		12, 15, 16				
5									BUSHING, Pedal Shaft
	5096 550AA	2	2, 6		01, 02, 06				
		2	2, 6		11, 12, 14, 15, 16				
		2	2, 6		51, 52, 54, 55, 56				
		2	3, 7		02, 06				
		2	3, 7		12, 15, 16				
6									LEVER, Load Sensing
	5119 337AA	1	2, 6		01, 02, 06				

Refer to Model Legend Information Bookmark

Brake, Power Regulator
Figure 005-520

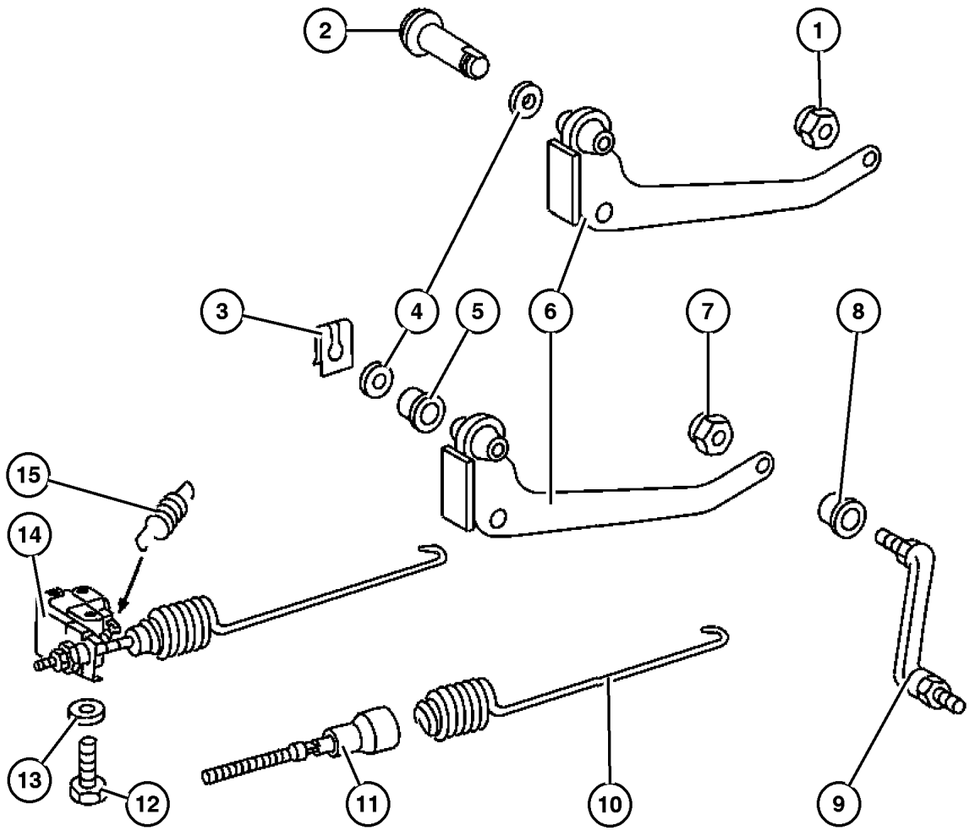

ITEM	PART NUMBER	QTY	LINE	SERIES	BODY	ENGINE	TRANS	TRIM	DESCRIPTION
		1	2, 6		11, 12,				
					14, 15,				
					16				
		1	2, 6		51, 52,				
					54, 55,				
					56				
	5119 339AA	1	3, 7		02, 06				
		1	3, 7		12, 15,				
					16				
7									NUT, Hex
	5097 685AA	2	2, 6		01, 02,				
					06				
		2	2, 6		11, 12,				
					14, 15,				
					16				
		2	2, 6		51, 52,				
					54, 55,				
					56				
		2	3, 7		02, 06				
		2	3, 7		12, 15,				
					16				
8									BUSHING
	5118 723AA	2	2, 6		01, 02,				
					06				
		2	2, 6		11, 12,				
					14, 15,				
					16				
		2	2, 6		51, 52,				
					54, 55,				
					56				
		2	3, 7		02, 06				
		2	3, 7		12, 15,				
					16				
9									LINK, Load Sensing
	5103 920AA	1	2, 6		01, 02,				
					06				
		1	2, 6		11, 12,				
					14, 15,				
					16				
		1	2, 6		51, 52,				
					54, 55,				
					56				
		1	3, 7		02, 06				
		1	3, 7		12, 15,				
					16				
10									SPRING, Load Sensing Lever

Refer to Model Legend Information Bookmark

Brake, Power Regulator
Figure 005-520

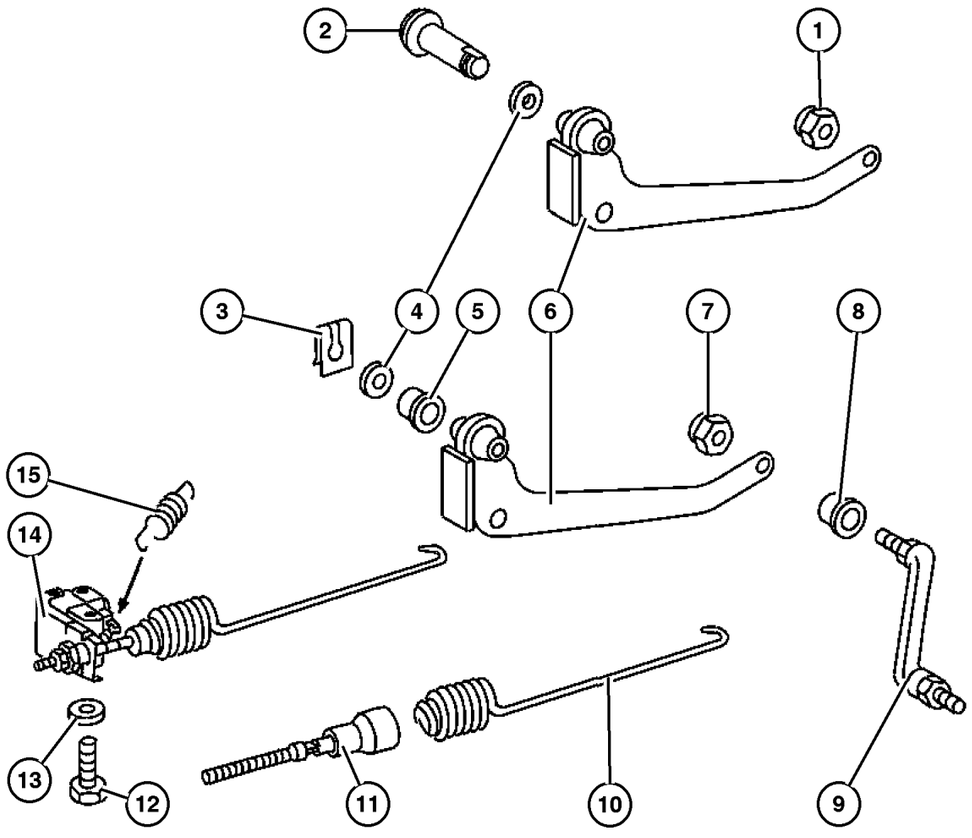

ITEM	PART NUMBER	QTY	LINE	SERIES	BODY	ENGINE	TRANS	TRIM	DESCRIPTION
	5133 722AA	1	2, 6		01, 02, 06				
		1	2, 6		11, 12, 14, 15, 16				
		1	2, 6		51, 52, 54, 55, 56				
		1	3, 7		02, 06				
		1	3, 7		12, 15, 16				
11									SCREW, Load Sensing Adjustment
	5133 723AA	1	2, 6		01, 02, 06				
		1	2, 6		11, 12, 14, 15, 16				
		1	2, 6		51, 52, 54, 55, 56				
		1	3, 7		02, 06				
		1	3, 7		12, 15, 16				
12									BOLT, M8
	5133 724AA	2	2, 6		01, 02, 06				
		2	2, 6		11, 12, 14, 15, 16				
		2	2, 6		51, 52, 54, 55, 56				
		2	3, 7		02, 06				
		2	3, 7		12, 15, 16				
13									WASHER
	5104 613AA	1	2, 6		01, 02, 06				
		1	2, 6		11, 12, 14, 15, 16				
		1	2, 6		51, 52, 54, 55, 56				
	5104 614AA	1	3, 7		02, 06				

Refer to Model Legend Information Bookmark

AR = Use as required - = Non illustrated part # = New this model year

March 3, 2006

« RETURN TO GROUP INDEX

Brake, Power Regulator
Figure 005-520

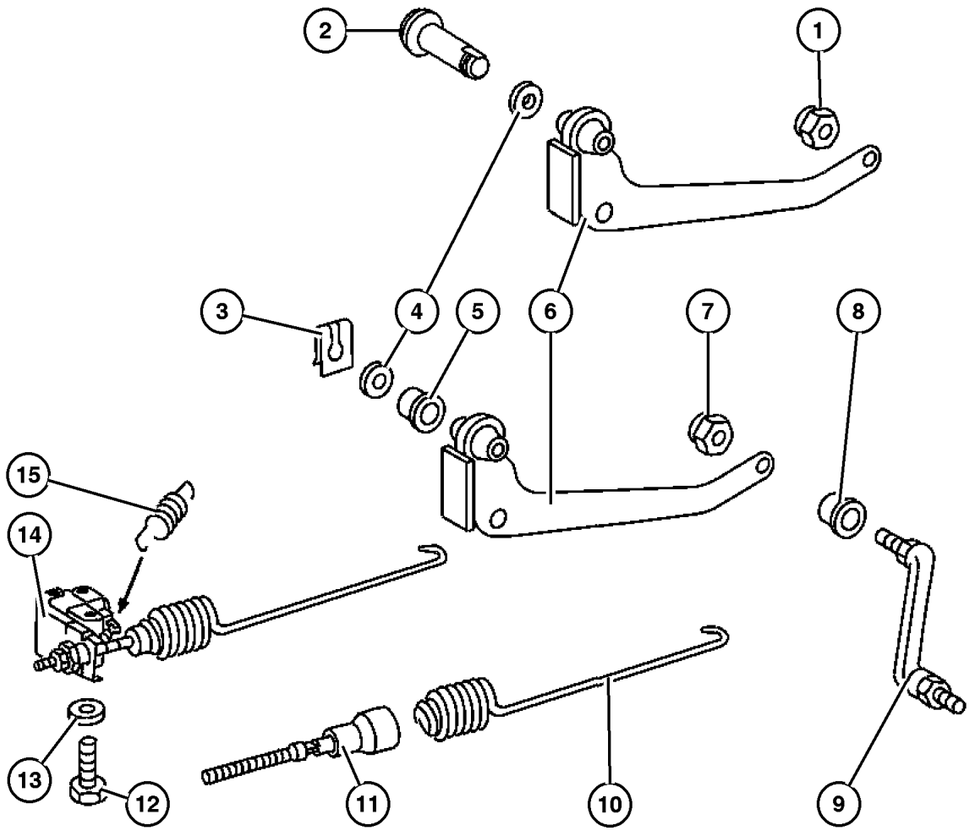

ITEM	PART NUMBER	QTY	LINE	SERIES	BODY	ENGINE	TRANS	TRIM	DESCRIPTION
		1	3, 7		12, 15, 16				
14	5103 824AA	1	2, 6		01, 02, 06				VALVE, Load sensing
		1	2, 6		11, 12, 14, 15, 16				
		1	2, 6		51, 52, 54, 55, 56				
		1	3, 7		02, 06				
		1	3, 7		12, 15, 16				
15	5133 720AA	1	2, 6		01, 02, 06				SPRING, Load Sensing Valve
		1	2, 6		11, 12, 14, 15, 16				
		1	2, 6		51, 52, 54, 55, 56				
		1	3, 7		02, 06				
		1	3, 7		12, 15, 16				

Refer to Model Legend Information Bookmark

AR = Use as required - = Non illustrated part # = New this model year

March 3, 2006

« RETURN TO GROUP INDEX

Pedal Brake
Figure 005-610

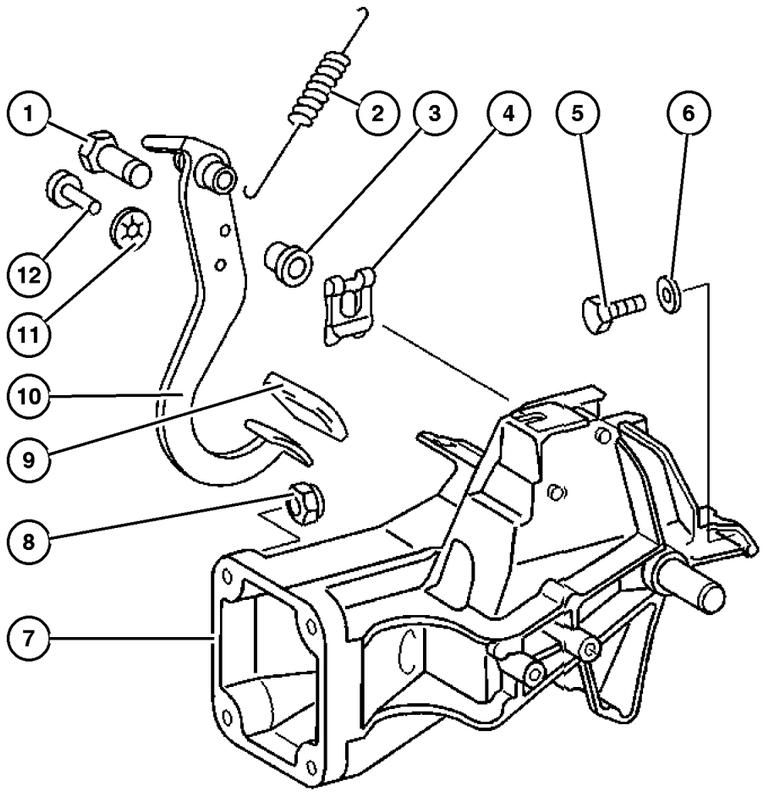

ITEM	PART NUMBER	QTY	LINE	SERIES	BODY	ENGINE	TRANS	TRIM	DESCRIPTION
1									PIN, Brake Pedal Pivot Shaft
	5117 911AA	1	2, 6		01, 02, 06				
		1	2, 6		11, 12, 14, 15, 16				
		1	2, 6		51, 52, 54, 55, 56				
		1	3, 7		02, 06				
		1	3, 7		12, 15, 16				
2									SPRING, Brake Pedal Return
	5125 847AA	1	2, 6		01, 02, 06				
		1	2, 6		11, 12, 14, 15, 16				
		1	2, 6		51, 52, 54, 55, 56				
		1	3, 7		02, 06				
		1	3, 7		12, 15, 16				
3									BUSHING, Pedal Shaft
	5096 550AA	2	2, 6		01, 02, 06				
		2	2, 6		11, 12, 14, 15, 16				
		2	2, 6		51, 52, 54, 55, 56				
		2	3, 7		02, 06				
		2	3, 7		12, 15, 16				
4									RETAINER
	5125 872AA	1	2, 6		01, 02, 06				
		1	2, 6		11, 12, 14, 15, 16				
		1	2, 6		51, 52, 54, 55, 56				

Refer to Model Legend Information Bookmark

AR = Use as required - = Non illustrated part # = New this model year

March 3, 2006

« RETURN TO GROUP INDEX

»

Pedal Brake
Figure 005-610

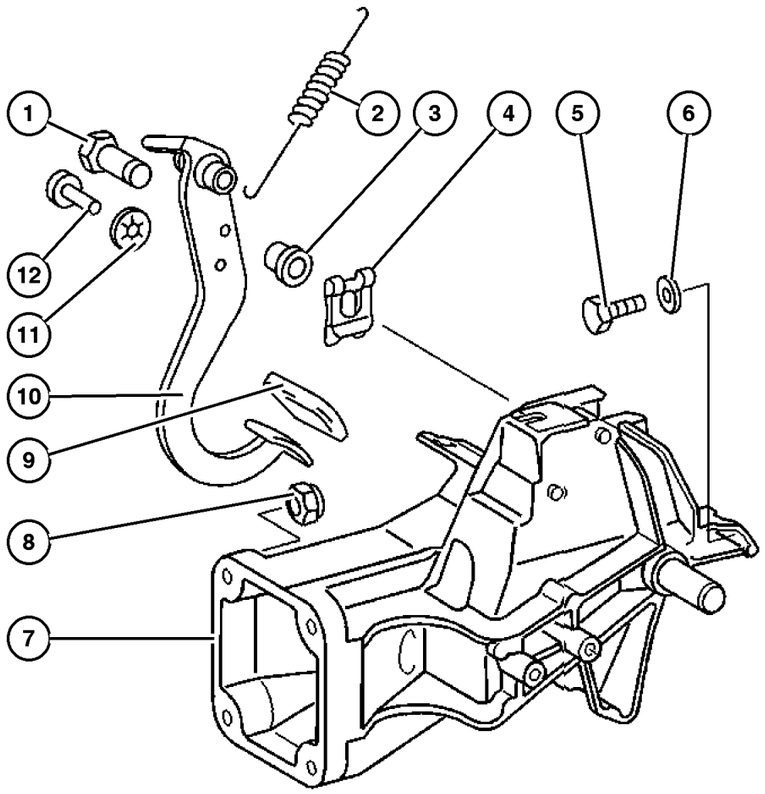

ITEM	PART NUMBER	QTY	LINE	SERIES	BODY	ENGINE	TRANS	TRIM	DESCRIPTION
		1	3, 7		02, 06				
		1	3, 7		12, 15, 16				
5									BOLT
	5126 231AA	1	2, 6		01, 02, 06				Bracket to Firewall, Mounting
		1	2, 6		11, 12, 14, 15, 16				Bracket to Firewall, Mounting
		1	2, 6		51, 52, 54, 55, 56				Bracket to Firewall, Mounting
		1	3, 7		02, 06				Bracket to Firewall, Mounting
		1	3, 7		12, 15, 16				Bracket to Firewall, Mounting
6									WASHER, Flat
	5098 108AA	1	2, 6		01, 02, 06				Bracket to Firewall, Mounting
		1	2, 6		11, 12, 14, 15, 16				Bracket to Firewall, Mounting
		1	2, 6		51, 52, 54, 55, 56				Bracket to Firewall, Mounting
		1	3, 7		12, 15, 16				Bracket to Firewall, Mounting
		1	3, 7		02, 06				Bracket to Firewall, Mounting
7									BRACKET, Brake Pedal
	5128 211AA	1	2, 6		01, 02, 06				Bracket to Firewall, Mounting
		1	2, 6		11, 12, 14, 15, 16				Bracket to Firewall, Mounting
		1	2, 6		51, 52, 54, 55, 56				Bracket to Firewall, Mounting
		1	3, 7		02, 06				Bracket to Firewall, Mounting
		1	3, 7		12, 15, 16				Bracket to Firewall, Mounting
8									NUT
	6104 716AA	4	2, 6		01, 02, 06				Bracket to Firewall, Mounting
		4	2, 6		11, 12, 14, 15, 16				Bracket to Firewall, Mounting

Refer to Model Legend Information Bookmark

Pedal Brake
Figure 005-610

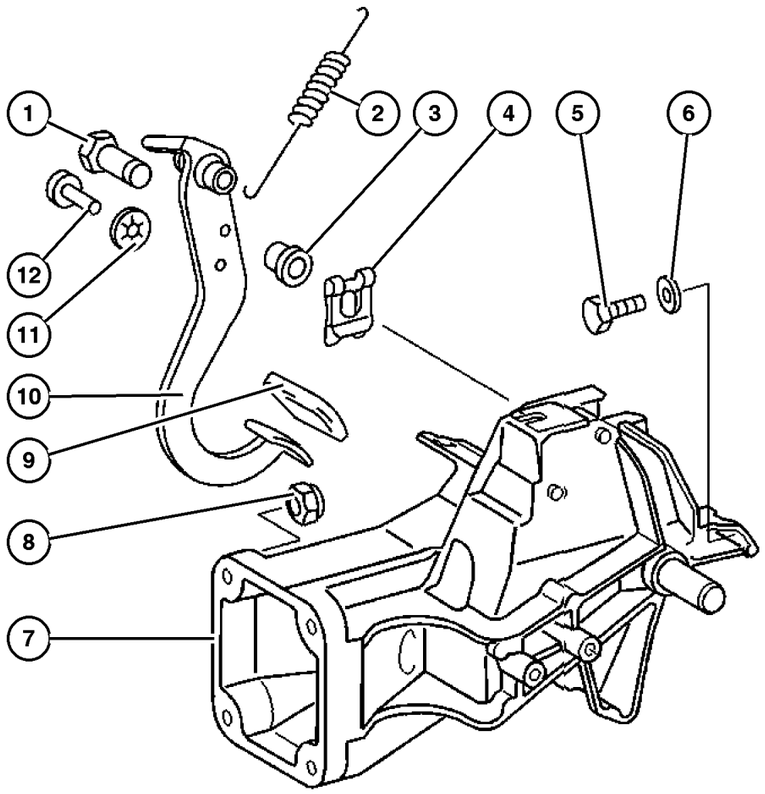

ITEM	PART NUMBER	QTY	LINE	SERIES	BODY	ENGINE	TRANS	TRIM	DESCRIPTION
		4	2, 6		51, 52,				
					54, 55,				
					56				
		4	3, 7		02, 06				
		4	3, 7		12, 15,				
					16				
9									PAD, Pedal
	5104 017AA	1	2, 6		01, 02,				
					06				
		1	2, 6		11, 12,				
					14, 15,				
					16				
		1	2, 6		51, 52,				
					54, 55,				
					56				
		1	3, 7		02, 06				
		1	3, 7		12, 15,				
					16				
10									PEDAL, Brake
	5104 045AA	1	2, 6		01, 02,				
					06				
		1	2, 6		11, 12,				
					14, 15,				
					16				
		1	2, 6		51, 52,				
					54, 55,				
					56				
		1	3, 7		02, 06				
		1	3, 7		12, 15,				
					16				
11									CLIP, Spring
	5097 670AA	1	2, 6		01, 02,				
					06				
		1	2, 6		11, 12,				
					14, 15,				
					16				
		1	2, 6		51, 52,				
					54, 55,				
					56				
		1	3, 7		02, 06				
		1	3, 7		12, 15,				
					16				
12									PIN, Brake Pedal Pivot Shaft
	5117 903AA	1	2, 6		01, 02,				
					06				

Refer to Model Legend Information Bookmark

AR = Use as required - = Non illustrated part # = New this model year

March 3, 2006

« RETURN TO GROUP INDEX

« »

Pedal Brake
Figure 005-610

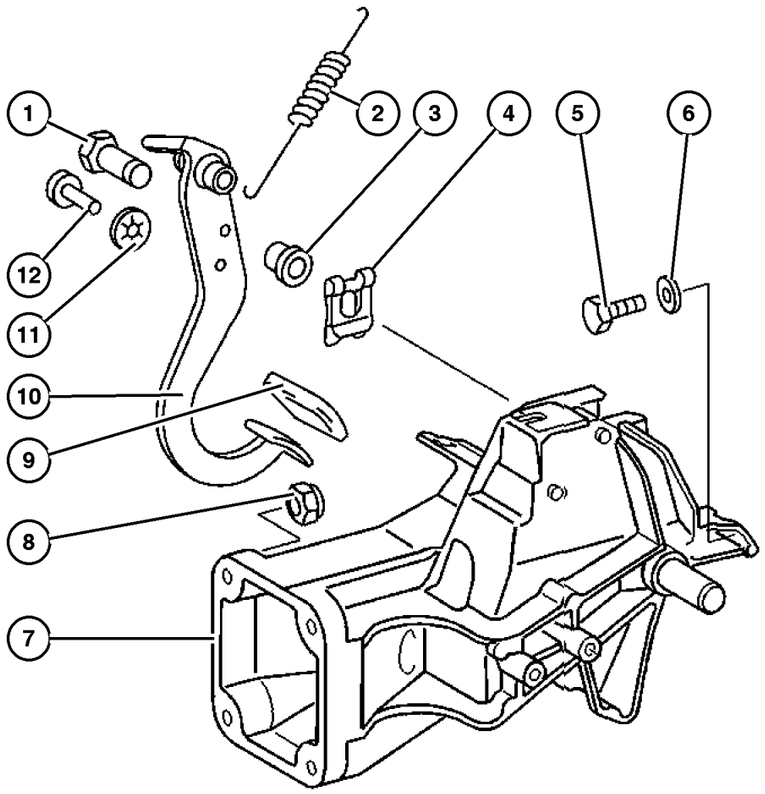

ITEM	PART NUMBER	QTY	LINE	SERIES	BODY	ENGINE	TRANS	TRIM	DESCRIPTION
		1	2, 6		11, 12, 14, 15, 16				
		1	2, 6		51, 52, 54, 55, 56				
		1	3, 7		02, 06				
		1	3, 7		12, 15, 16				

Refer to Model Legend Information Bookmark

AR = Use as required - = Non illustrated part # = New this model year

March 3, 2006

« RETURN TO GROUP INDEX

Group – 007
Cooling

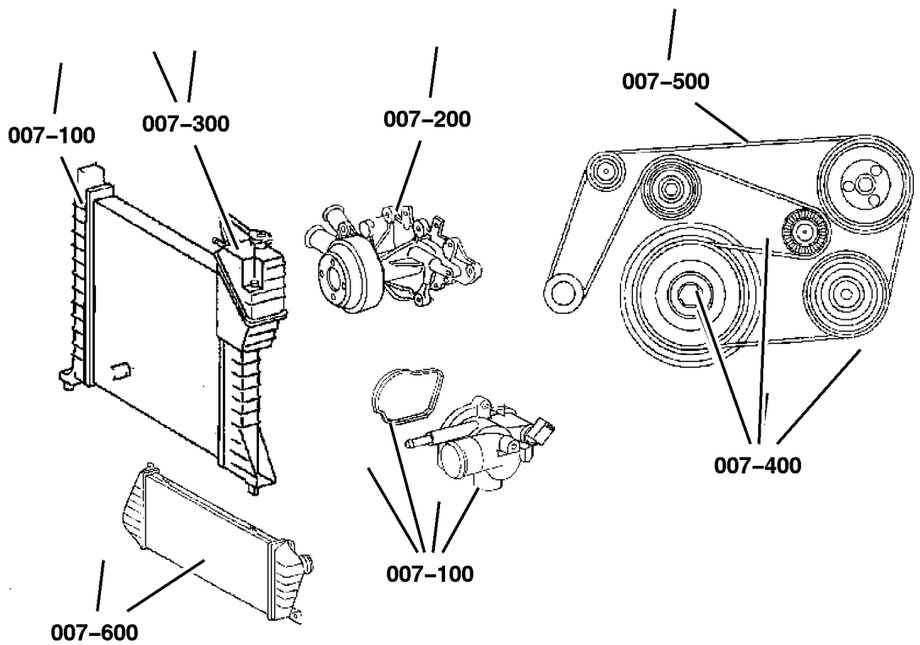

007–100 Radiator and Related Parts	**007–200** Water Pump and Related Parts	**007–400** Pulleys and Related Parts	**007–500** Drive Belts
007–600 Lines, Transmission Oil Cooler	**007–700** Grilles		

GROUP 7 - Cooling

Illustration Title — Group-Fig. No.

Radiator and Related Parts
Radiator and Related Parts . . . . . Fig. 007-120
Charge Air Intercooler . . . . . Fig. 007-130

Water Pump and Related Parts
Water Pump and Related Parts . . . . . Fig. 007-210

Pulleys and Related Parts
Drive Pulleys . . . . . Fig. 007-410

Drive Belts
Drive Belts . . . . . Fig. 007-520

Lines, Transmission Oil Cooler
Oil Cooler Lines . . . . . Fig. 007-610

Grilles
Grille and Related Parts . . . . . Fig. 007-710

Radiator and Related Parts
Figure 007-120

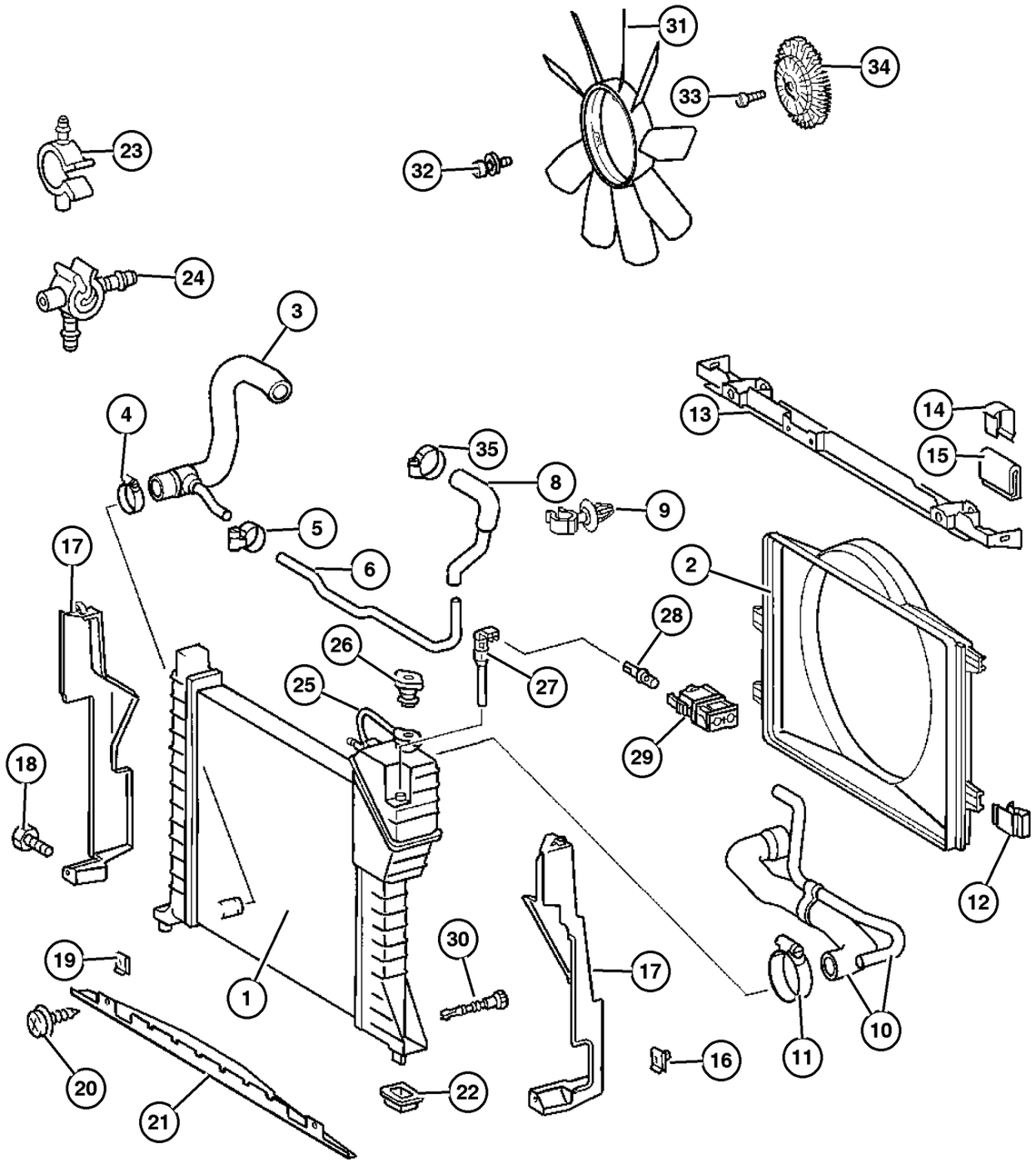

ITEM	PART NUMBER	QTY	LINE	SERIES	BODY	ENGINE	TRANS	TRIM	DESCRIPTION
NOTES: Sales Codes:									
[EK8] = 2.7L I5 Turbo Diesel Engine									
1									RADIATOR
	5104 117AA	1	2, 6			EX8	DGZ		
		1	3, 7			EX8	DGZ		
2									SHROUD, Fan
	5104 130AA	1	2, 6			EX8	DGZ		
		1	3, 7			EX8	DGZ		
3									HOSE, Radiator Outlet
	5103 581AA	1	2, 6			EX8			
		1	3, 7			EX8			
4									CLAMP, Hose
	6104 785AA	2	2, 6			EX8	DGZ		
		2	3, 7			EX8	DGZ		
5									CLAMP, HOSE CLAMP
	6104 779AA	3	2, 6			EX8	DGZ		
		3	3, 7			EX8	DGZ		
6									HOSE, Radiator Outlet
	5103 581AA	1	2, 6			EX8			
		1	3, 7			EX8			
-7									HOSE, Coolant
	5135 342AA-	1	2, 6			EX8	DGZ		
		1	3, 7			EX8	DGZ		
8									HOSE, Radiator
	5103 580AA	1	2, 6			EX8	DGZ		
		1	3, 7			EX8	DGZ		
9									CLIP, Cable
	5125 879AA	4	2, 6			EX8	DGZ		
		4	3, 7			EX8	DGZ		
10									HOSE, Radiator Inlet
	5103 582AA	1	2, 6			EX8	DGZ		
		1	3, 7			EX8	DGZ		
11									CLAMP, Hose
	6104 784AA	2	2, 6			EX8	DGZ		
		2	3, 7			EX8	DGZ		
12									CLIP, Fan Shroud
	5099 355AA	4	2, 6			EX8	DGZ		
		4	3, 7			EX8	DGZ		
13									COVER, Radiator
	5104 125AA	1	2, 6			EX8	DGZ		
		1	3, 7			EX8	DGZ		
14									CLAMP, Radiator
	5104 122AA	2	2, 6			EX8	DGZ		
		2	3, 7			EX8	DGZ		
15									ISOLATOR, Radiator

Refer to Model Legend Information Bookmark

Radiator and Related Parts
Figure 007-120

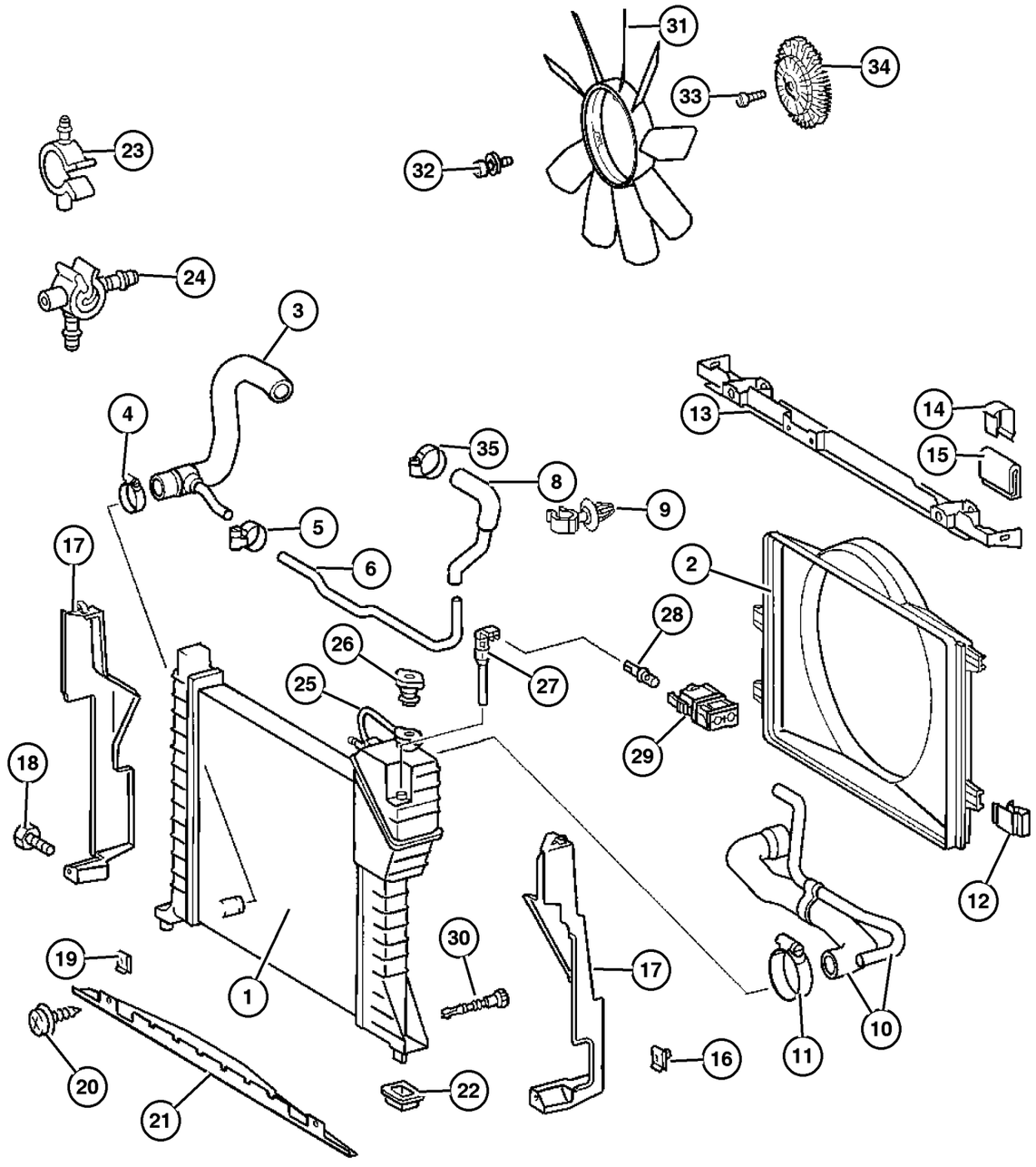

ITEM	PART NUMBER	QTY	LINE	SERIES	BODY	ENGINE	TRANS	TRIM	DESCRIPTION
	5104 123AA	2	2, 6			EX8	DGZ		
		2	3, 7			EX8	DGZ		
16									NUT
	5103 733AA	3	2, 6			EX8	DGZ		
		3	3, 7			EX8	DGZ		
17									SHIELD, Side, Radiator Cooling
	5104 128AA	1	2, 6			EX8	DGZ		Right
		1	3, 7			EX8	DGZ		Right
	5104 127AA	1	2, 6			EX8	DGZ		Left
		1	3, 7			EX8	DGZ		Left
18									SCREW
	5133 476AB	3	2, 6			EX8	DGZ		
		2	3, 7			EX8	DGZ		
19									CLIP
	5133 497AA	2	2, 6			EX8	DGZ		
		2	3, 7			EX8	DGZ		
20									SCREW, Tapping
	6104 574AA	2	2, 6			EX8	DGZ		
		4	3, 7			EX8	DGZ		
21									SHIELD, Radiator
	5104 129AA	1	2, 6			EX8	DGZ		
		1	3, 7			EX8	DGZ		
22									ISOLATOR, Radiator
	5104 021AA	2	2, 6			EX8	DGZ		
		2	3, 7			EX8	DGZ		
23									CLIP, (NOT SERVICED) (Not Serviced)
24									CLIP, Retaining
	6104 924AA	1	2, 6			EX8	DGZ		
		1	3, 7			EX8	DGZ		
25	5125 974AA	900	3, 7			EX8	DGZ		HOSE 1 METER
26									CAP, Radiator
	5103 533AA	1	2, 6			EX8	DGZ		
		1	3, 7			EX8	DGZ		
27									SENSOR, Coolant Level
	5120 509AA	1	2, 6			EX8	DGZ		
		1	3, 7			EX8	DGZ		
28									TERMINAL
	5120 519AA	1	2, 6			EX8	DGZ		
		1	3, 7			EX8	DGZ		
29									CONNECTOR
	5120 692AA	1	2, 6			EX8	DGZ		
		1	3, 7			EX8	DGZ		
30									DRAINCOCK, Radiator
	5098 834AA	1	2, 6			EX8	DGZ		

Refer to Model Legend Information Bookmark

AR = Use as required - = Non illustrated part # = New this model year

March 3, 2006

« RETURN TO GROUP INDEX

Radiator and Related Parts
Figure 007-120

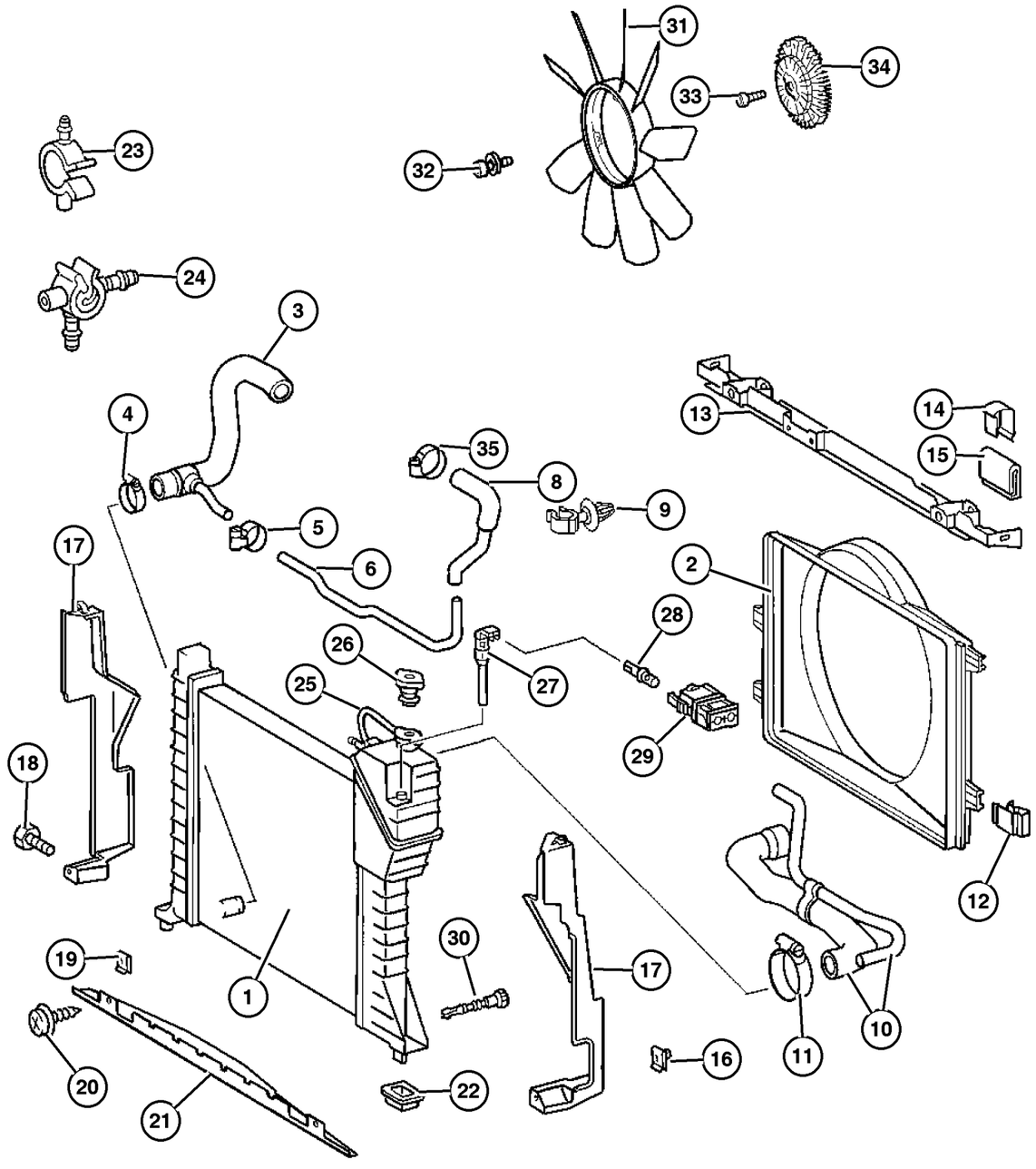

ITEM	PART NUMBER	QTY	LINE	SERIES	BODY	ENGINE	TRANS	TRIM	DESCRIPTION
		1	3, 7			EX8	DGZ		
31									FAN, Cooling
	5136 052AA	1	2, 6			EX8	DGZ		
		1	3, 7			EX8	DGZ		
32									SCREW, (NOT SERVICED) (Not Serviced)
33									SCREW, Hitch Ball
	5104 618AA	1	2, 6			EX8	DGZ		
		1	3, 7			EX8	DGZ		
34									DRIVE, Fan
	5103 623AA	1	2, 6			EX8	DGJ		
		1	3, 7			EX8	DGJ		
35									CLAMP
	5133 494AA	1	2, 6			EX8	DGZ		
		1	3, 7			EX8	DGZ		

Refer to Model Legend Information Bookmark

Charge Air Intercooler
Figure 007-130

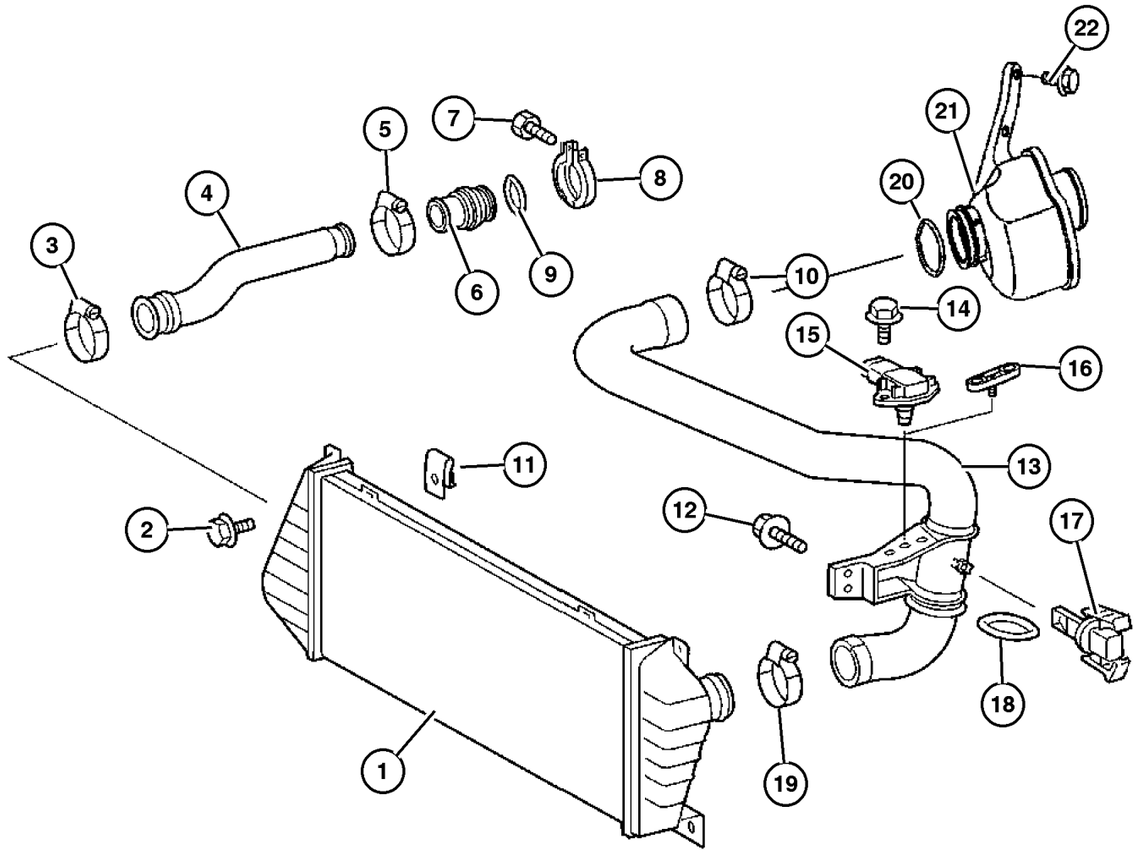

ITEM	PART NUMBER	QTY	LINE	SERIES	BODY	ENGINE	TRANS	TRIM	DESCRIPTION
NOTES: Sales Codes:									
[EK8] = 2.7L I5 Turbo Diesel Engine									
1									COOLER, Charge Air
	5119 997AA	1	2, 6			EX8	DGZ		
		1	3, 7			EX8	DGZ		
2									SCREW
	5133 476AB	4	2, 6			EX8	DGZ		
		4	3, 7			EX8	DGZ		
3									CLAMP
	5104 602AA	1	2, 6			EX8, EX9			
		1	3, 7			EX8, EX9			
4									HOSE, Turbo to Charge Air Cooler
	5104 142AA	1	2, 6			EX8, EX9			
		1	3, 7			EX8, EX9			
5									CLAMP, Hose
	5104 601AA	1	2, 6			EX8	DGZ		
		1	3, 7			EX8	DGZ		
6									PIPE
	5104 118AA	1	2, 6			EX8	DGZ		
		1	3, 7			EX8	DGZ		
7	5096 986AA	2	2, 6			EX8	DGZ		SCREW
8									CLAMP, Mounting
	5125 874AA	1	2, 6			EX8	DGZ		
		1	3, 7			EX8	DGZ		
9	5080 311AA	1	2, 3, 6, 7			EX8	DGJ		O RING
10									CLAMP
	5104 602AA	1	2, 6			EX8, EX9			
		1	3, 7			EX8, EX9			
11									U-NUT
	5125 863AA	4	2, 6			EX8	DGZ		
		4	3, 7			EX8	DGZ		
12									SCREW
	5104 610AA	2	2, 6			EX8	DGZ		
		2	3, 7			EX8	DGZ		
13									HOSE, Radiator
	5120 147AA	1	2, 6			EX8	DGZ		
		1	3, 7			EX8	DGZ		
14									SCREW
	6104 172AA	2	2, 6			EX8	DGZ		

Refer to Model Legend Information Bookmark

AR = Use as required - = Non illustrated part # = New this model year

March 3, 2006

« RETURN TO GROUP INDEX

»

Charge Air Intercooler
Figure 007-130

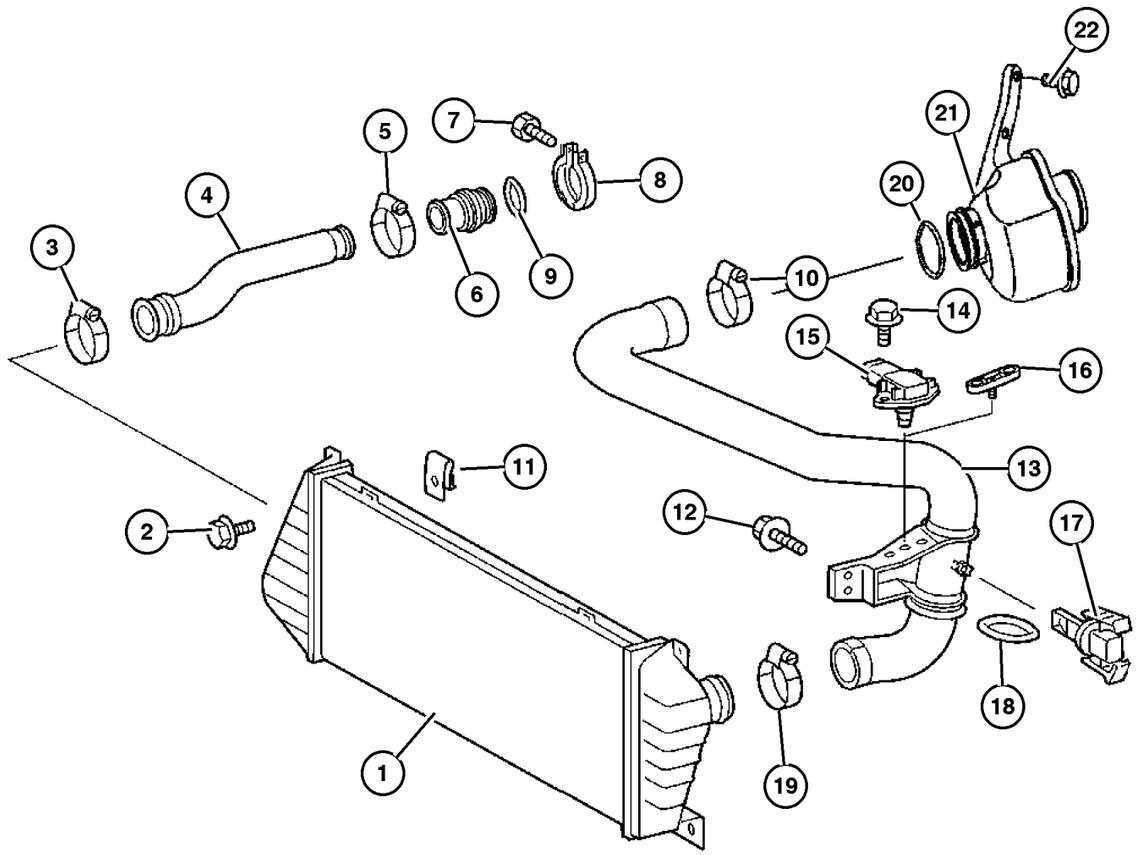

ITEM	PART NUMBER	QTY	LINE	SERIES	BODY	ENGINE	TRANS	TRIM	DESCRIPTION
		1	3, 7			EX8	DGZ		
15									SENSOR, Map
	5117 545AA	1	2, 6			EX8	DGZ		
		1	3, 7			EX8	DGZ		
16									SPACER, (NOT SERVICED) (Not Serviced)
17	5174 042AA	1	2, 3, 6, 7			EX8	DGZ		SENSOR, Temperature, AIR INTAKE TEMP. SENSOR
18	5103 906AA	1	3, 7			EX8	DGZ		O RING
19									CLAMP
	5104 602AA	1	2, 6			EX8, EX9			
		1	3, 7			EX8, EX9			
20	5139 047AA	1	2, 3, 6, 7			EX8	DGZ		O RING
21	5137 154AA	1	2, 3, 6, 7			EX8	DGZ		RESONATOR, turbo
22	6104 077AA	2	2, 3, 6, 7			EX8	DGZ		SCREW

Refer to Model Legend Information Bookmark

AR = Use as required - = Non illustrated part # = New this model year

March 3, 2006

« RETURN TO GROUP INDEX

Water Pump and Related Parts
Figure 007-210

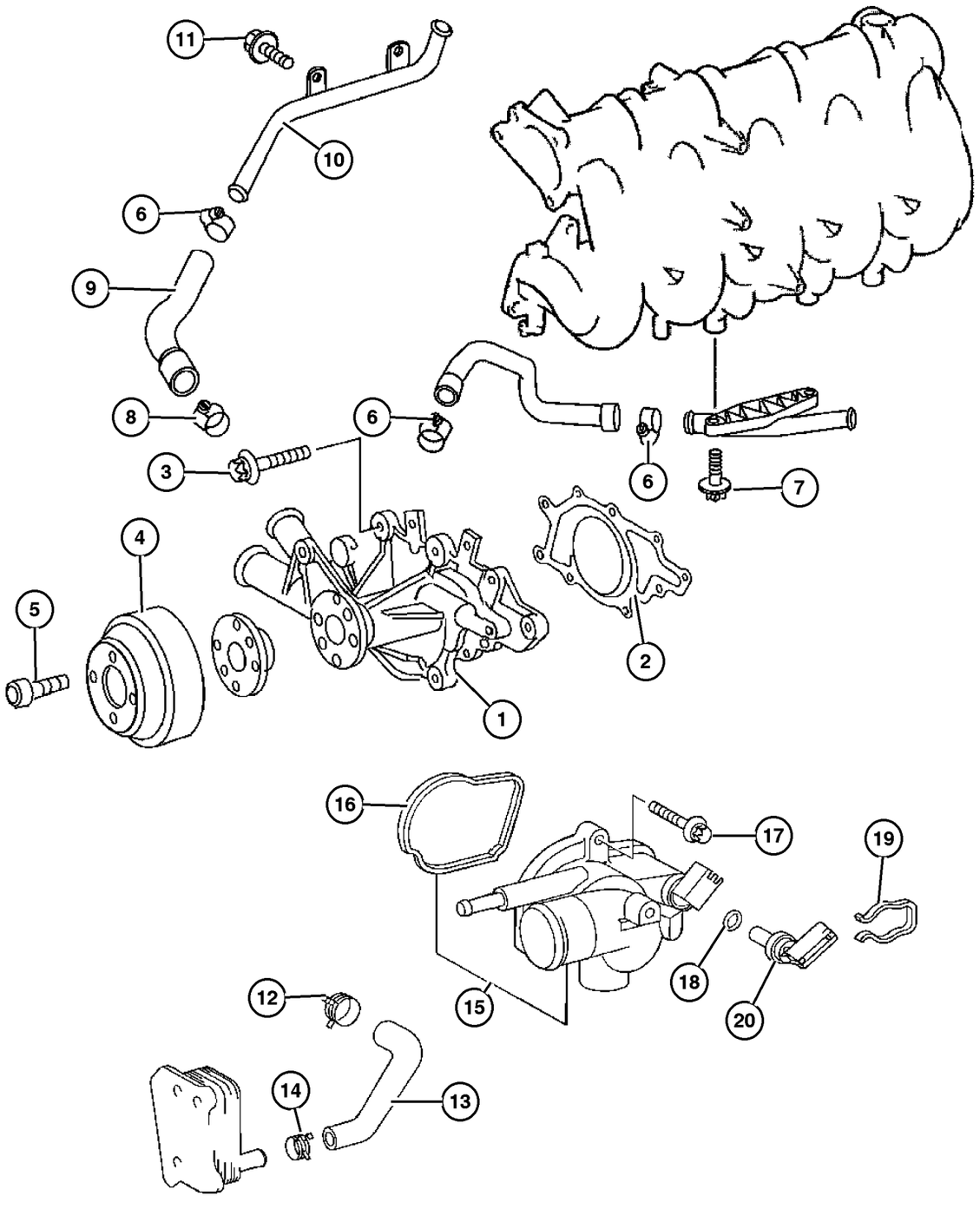

ITEM	PART NUMBER	QTY	LINE	SERIES	BODY	ENGINE	TRANS	TRIM	DESCRIPTION
1	5138 057AA	1	2, 3, 6, 7			EX8	DGZ		PUMP, Water
2	5080 144AA	1	2, 3, 6, 7			EX8	DGZ		GASKET, Water Pump, Coolant Pump
3	6104 682AA	3	2, 3, 6, 7			EX8	DGZ		SCREW
4	5136 764AA	1	2, 3, 6, 7			EX8	DGZ		PULLEY, Water Pump
5	6104 140AA	4	2, 3, 6, 7			EX8	DGZ		SCREW
6	6104 781AA	1	2, 3, 6, 7			EX8	DGZ		CLAMP, Hose
7	5096 986AA	2	2, 6			EX8	DGZ		SCREW
8									CLAMP
	5133 494AA	1	2, 6			EX8	DGZ		
		1	3, 7			EX8	DGZ		
9	5103 985AA	1	2, 3, 6, 7			EX8	DGZ		TUBE, Heater Return
10	5117 644AA	1	2, 3, 6, 7			EX8	DGZ		TUBE, Heater Return
11									SCREW
	6104 005AA	2	2, 6			EX8	DGZ		
		2	3, 7			EX8	DGZ		
12	5080 153AA	1	2, 3, 6, 7			EX8	DGJ		CLAMP, Hose
13	5103 986AA	1	2, 3, 6, 7			EX8	DGZ		HOSE
14									CLAMP
	5133 496AA	1	2, 6			EX8	DGZ		
		1	3, 7			EX8	DGZ		
15	5080 146AB	1	2, 3, 6, 7			EX8	DGZ		THERMOSTAT
16	5080 150AA	1	2, 3, 6, 7			EX8	DGZ		GASKET, Thermostat
17	6104 144AA		2, 3, 6, 7			EX8	DGZ		SCREW
18	5080 148AA	1	2, 3, 6, 7			EX8	DGZ		O RING
19	5080 149AA	1	2, 3, 6, 7			EX8	DGZ		CLIP
20	5080 147AA	1	2, 3, 6, 7			EX8	DGZ		SENDING UNIT, Temperature Gauge
-21	5137 502AA-	1	2, 3, 6, 7			EX8	DGZ		GASKET, Water Pump, Lower Hose/ Tube to Water Pump

Refer to Model Legend Information Bookmark

AR = Use as required - = Non illustrated part # = New this model year

March 3, 2006

« RETURN TO GROUP INDEX

Drive Pulleys
Figure 007-410

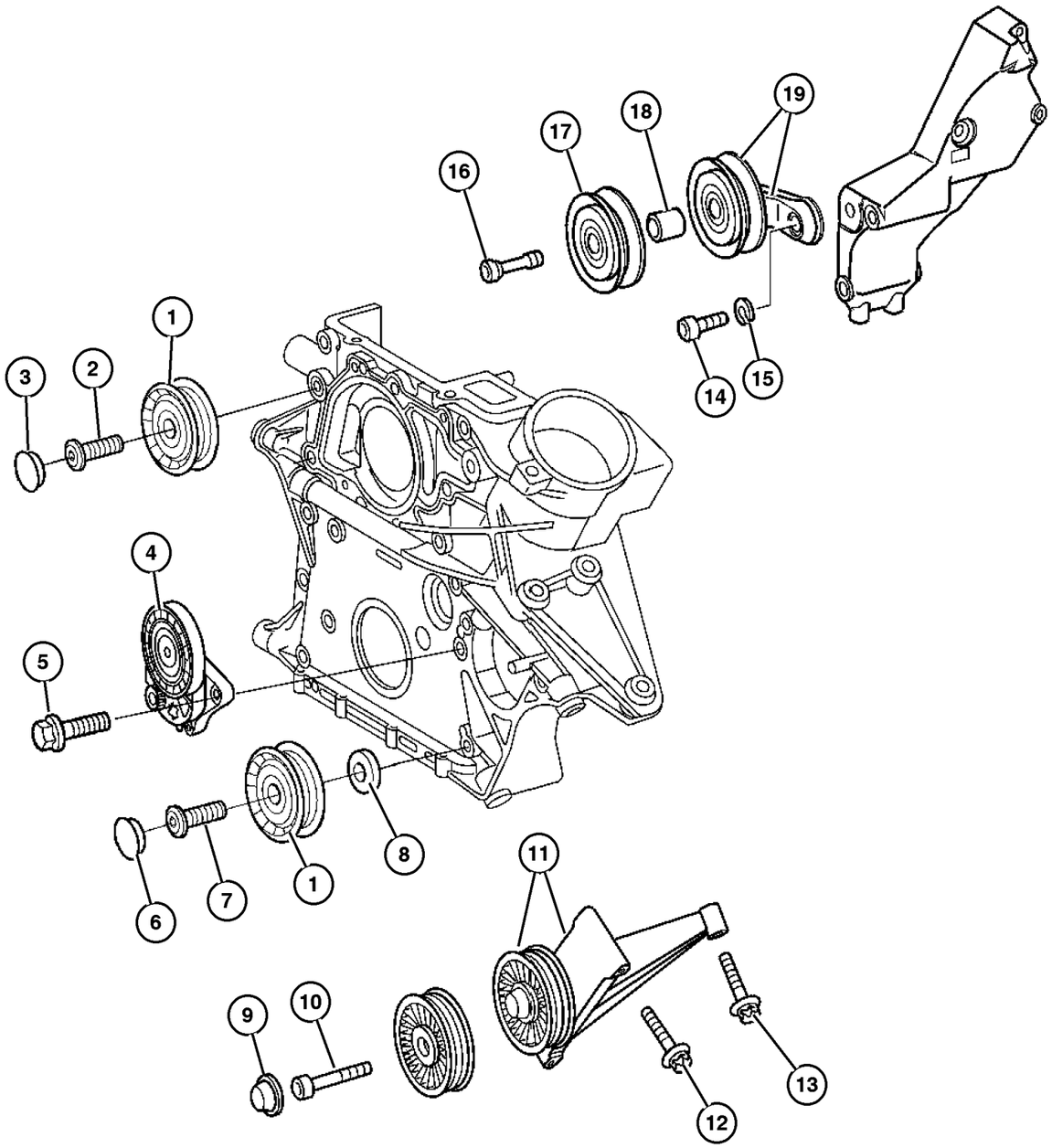

ITEM	PART NUMBER	QTY	LINE	SERIES	BODY	ENGINE	TRANS	TRIM	DESCRIPTION
NOTES: Sales Code:									
[EK8] = 2.7L I5 Turbo Diesel Engine									
1	5080 246AA	2	2, 3, 6, 7			EX8	DGZ		PULLEY, Tensioner
2	5073 902AA	1	2, 3, 6, 7			EX8	DGZ		SCREW
3	5080 250AA	1	2, 3, 6, 7			EX8	DGZ		CAP, CAP
4	5080 243AA	1	2, 3, 6, 7			EX8	DGZ		TENSIONER, Belt
5	5073 896AA	4	2, 3, 6, 7			EX8	DGZ		SCREW
6	5080 250AA	1	2, 3, 6, 7			EX8	DGZ		CAP, CAP
7	5073 902AA	1	2, 3, 6, 7			EX8	DGZ		SCREW
8	5080 248AA	1	2, 3, 6, 7			EX8	DGZ		WASHER
9	5125 553AA	1	2, 3, 6, 7			EX8	DGZ		CAP, Screw Cover
10	5126 143AA	1	2, 3, 6, 7			EX8	DGZ		SCREW
11									PULLEY, Tensioner
	5117 691AA	1	2, 6			EX8	DGZ		
		1	3, 7			EX8	DGZ		
12									SCREW
	6104 035AA	2	2, 6			EX8	DGZ		
		2	3, 7			EX8	DGZ		
13	5133 207AA	3	2, 3, 6, 7			EX8	DGZ		BOLT, Hex Head
14									SCREW, (NOT SERVICED) (Not Serviced)
15									WASHER, (NOT SERVICED) (Not Serviced)
16									SCREW
	5125 736AA	1	2, 6			EX8	DGZ		
		1	3, 7			EX8	DGZ		
17									TENSIONER, Belt
	5117 510AA	1	2, 6			EX8	DGZ		
		1	3, 7			EX8	DGZ		
18									BUSHING, Idler Pulley
	5117 516AA	1	2, 6			EX8	DGZ		
		1	3, 7			EX8	DGZ		
19	5080 243AA	1	2, 3, 6, 7			EX8	DGZ		TENSIONER, Belt

Refer to Model Legend Information Bookmark

AR = Use as required - = Non illustrated part # = New this model year

March 3, 2006

« RETURN TO GROUP INDEX

Drive Belts
Figure 007-520

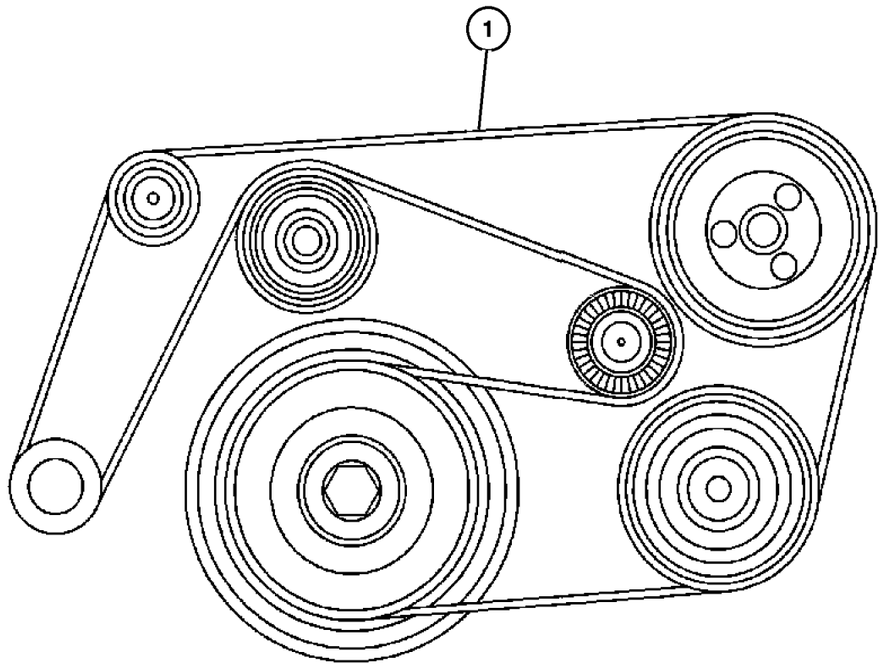

ITEM	PART NUMBER	QTY	LINE	SERIES	BODY	ENGINE	TRANS	TRIM	DESCRIPTION
NOTE:									
Sales Codes:									
[DGZ]=5 Speed Automatic [W5A380] Transmission									
[EX8]=2.7L I-5 Turbo Diesel Engine									
1									BELT, Accessory Drive
	5127 258AA	1	2, 6			EX8	DGZ		With Air Conditioning, 21.36X2260
		1	3, 7			EX8	DGZ		With Air Conditioning, 21.36X2260
	5132 825AA	1	2, 3, 6, 7			EX8	DGZ		
		1	2, 6			EX8	DGZ		
		1	3, 7			EX8	DGZ		
-2									BELT, V-Belt
	5125 848AA-	1	2, 6			EX8	DGZ		
		1	3, 7			EX8	DGZ		

Refer to Model Legend Information Bookmark

AR = Use as required - = Non illustrated part # = New this model year

March 3, 2006

« RETURN TO GROUP INDEX

Oil Cooler Lines
Figure 007-610

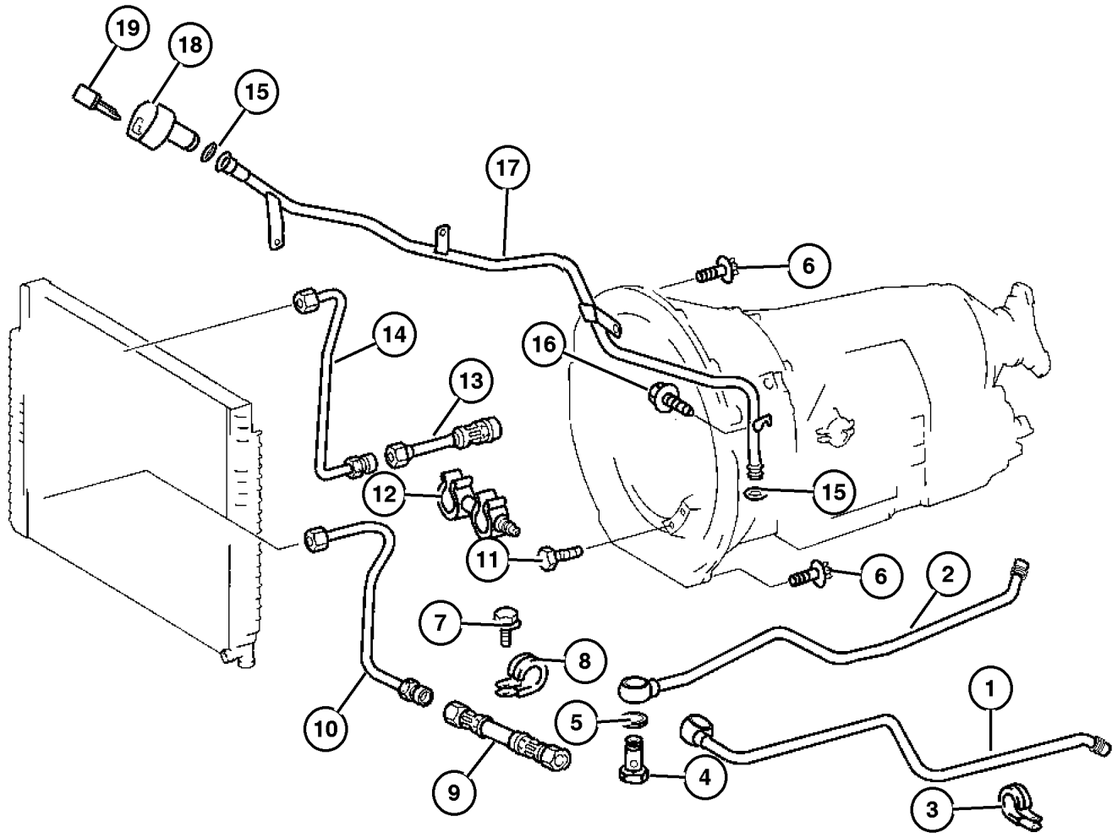

ITEM	PART NUMBER	QTY	LINE	SERIES	BODY	ENGINE	TRANS	TRIM	DESCRIPTION
NOTES: Sales Code:									
[EK8] = 2.7L I5 Turbo Diesel Engine									
1									TUBE, Oil Feed
	5117 855AA	1	2, 6			EX8	DGZ		
		1	3, 7			EX8	DGZ		
2									LINE, Transmission Oil Cooler Pressure
	5117 857AA	1	2, 6			EX8	DGZ		
		1	3, 7			EX8	DGZ		
3									CLAMP, CLAMP
	5097 689AA	3	2, 6			EX8	DGZ		
		3	3, 7			EX8	DGZ		
4									BOLT, Banjo
	6507 437AA	2	2, 6			EX8	DGZ		
		2	3, 7			EX8	DGZ		
5									WASHER, Banjo
	6507 454AA	4	2, 6			EX8	DGZ		
		4	3, 7			EX8	DGZ		
6									SCREW
	6104 047AA	2	2, 6			EX8	DGZ		
		2	3, 7			EX8	DGZ		
7									SCREW
	5073 824AA	1	2, 6			EX8	DGZ		
		2	3, 7			EX8	DGZ		
8									CLAMP, Oil Cooler Line
	5096 952AA	3	2, 6			EX8	DGZ		
		1	3, 7			EX8	DGZ		
9									LINE, Transmission Oil Cooler Pressure
	5117 856AA	1	2, 6			EX8	DGZ		
		1	3, 7			EX8	DGZ		
10									LINE, Oil Cooler Supply
	5119 991AA	1	2, 6			EX8	DGZ		
		1	3, 7			EX8	DGZ		
11									SCREW
	6507 095AA	6	2, 6			EX8	DGZ		
		6	3, 7			EX8	DGZ		
12									BRACKET, Transmission Oil Cooler
	5125 878AA	2	2, 6			EX8	DGZ		
		2	3, 7			EX8	DGZ		
13									TUBE AND HOSE, Oil Cooler
	5127 830AA	1	2, 6			EX8	DGZ		
		1	3, 7			EX8	DGZ		
14									LINE, Oil Cooler Return
	5119 993AA	1	2, 6			EX8	DGZ		

Refer to Model Legend Information Bookmark

AR = Use as required - = Non illustrated part # = New this model year **March 3, 2006**

« RETURN TO GROUP INDEX »

Oil Cooler Lines
Figure 007-610

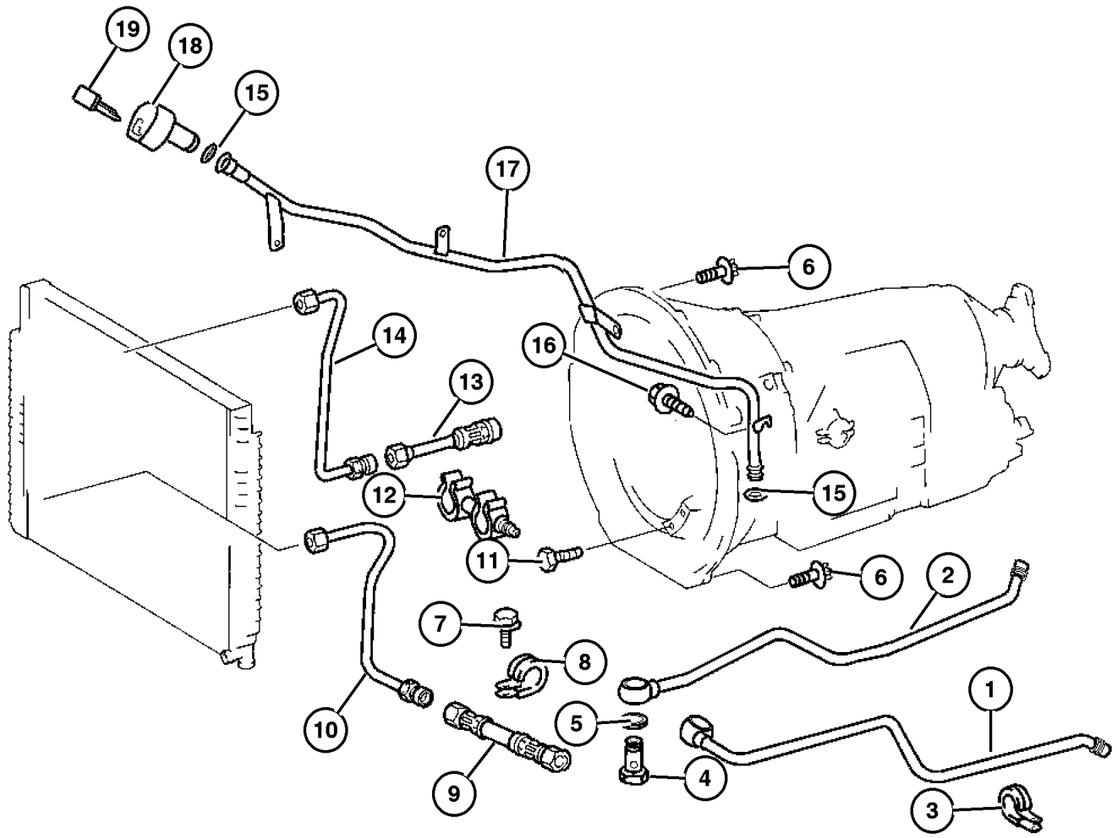

ITEM	PART NUMBER	QTY	LINE	SERIES	BODY	ENGINE	TRANS	TRIM	DESCRIPTION
		1	3, 7			EX8	DGZ		
15									SEAL, Oil Filler Tube
	5101 154AA	1	2, 6			EX8	DGZ		
		1	3, 7			EX8	DGZ		
16									SCREW
	5125 738AA	1	2, 6			EX8	DGZ		
		1	3, 7			EX8	DGZ		
17									TUBE, Transmission Oil Filler
	5117 847AA	1	2, 6			EX8	DGZ		
		1	3, 7			EX8	DGZ		
18									CAP, Oil Filler
	53013 549AA	1	2, 6			EX8	DGZ		
		1	3, 7			EX8	DGZ		
19									PIN
	5093 746AA	1	2, 6			EX8	DGZ		
		1	3, 7			EX8	DGZ		

Refer to Model Legend Information Bookmark

Grille and Related Parts
Figure 007-710

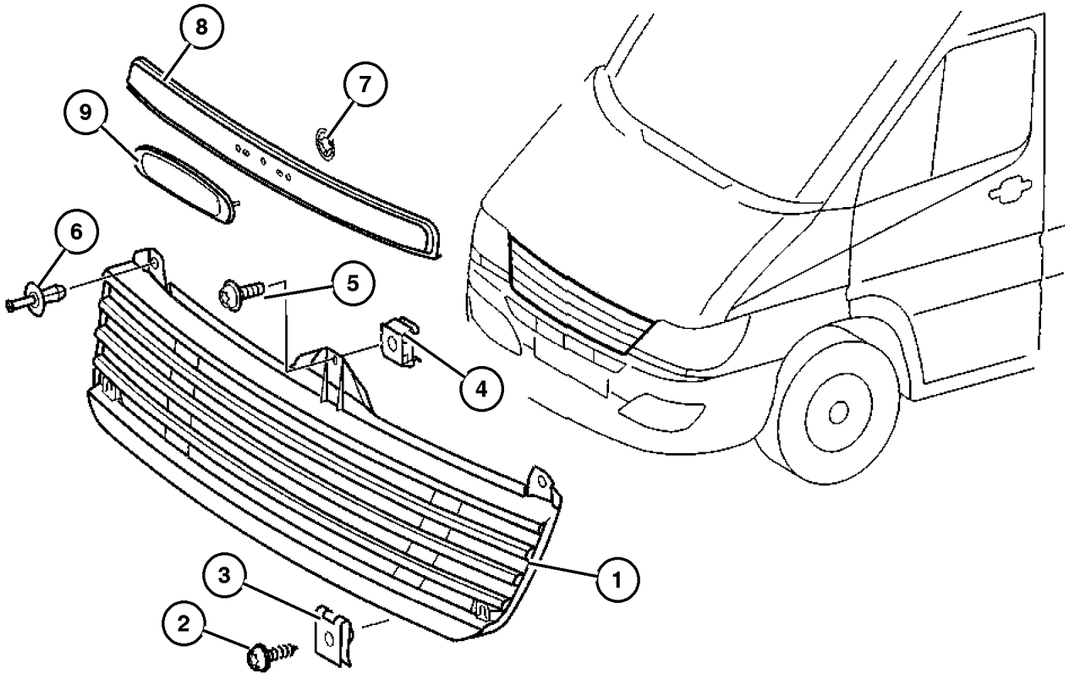

ITEM	PART NUMBER	QTY	LINE	SERIES	BODY	ENGINE	TRANS	TRIM	DESCRIPTION
NOTES: Sales Codes:									
[EK8] = 2.7L I5 Turbo Diesel Engine									
[MGQ] = Freightliner Badge									
[MQ4] = Dodge Badge									
1									GRILLE, Radiator
	5104 507AA	1	6			EX8	DGZ		[MGQ]
		1	7			EX8	DGZ		[MGQ]
	5114 373AA	1	2			EX8	DGZ		[MG4]
		1	3			EX8	DGZ		[MG4]
2									SCREW
	6104 576AA	2	6			EX8	DGZ		
		4	2			EX8	DGZ		[MG4]
		2	3			EX8	DGZ		
		2	7			EX8	DGZ		
3									NUT, Clip-On
	6104 736AA	4	2, 6			EX8	DGZ		
		4	3, 7			EX8	DGZ		
4									NUT
	5126 253AA	2	2, 6			EX8	DGZ		
		2	3, 7			EX8	DGZ		
5									SCREW, Hex Flange Head
	6104 121AA	2	2, 6			EX8	DGZ		
		2	3, 7			EX8	DGZ		
6									PIN, Push
	6104 905AA	2	6			EX8	DGZ		
		2	3, 7			EX8	DGZ		
7									RETAINER, Hood Ornament
	5096 429AA	2	2, 6			EX8	DGZ		[MG4]
		2	3, 7			EX8	DGZ		[MG4]
8									MOLDING, Hood
	5104 400AA	1	6			EX8	DGZ		[MGQ]
		1	7			EX8	DGZ		[MGQ]
9									NAMEPLATE, Hood
	5104 449AA	1	6			EX8	DGZ		[MGQ]
		1	7			EX8	DGZ		[MGQ]

Refer to Model Legend Information Bookmark

Group – 008

Electrical

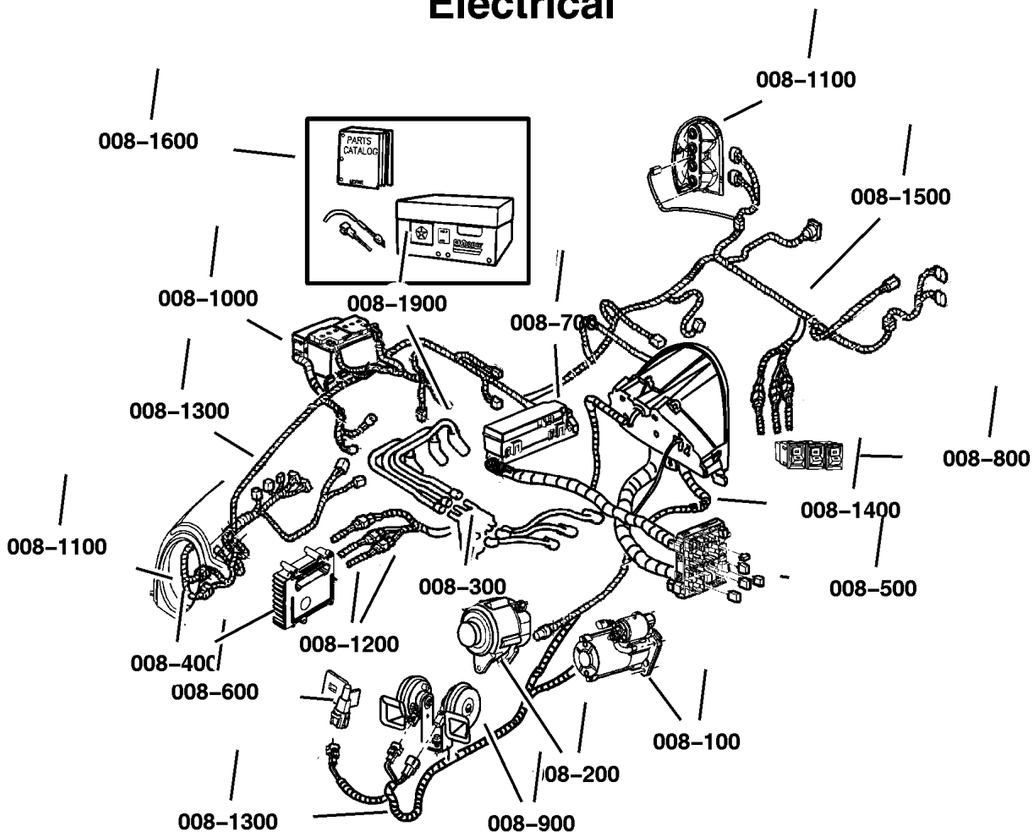

008–100 Starters 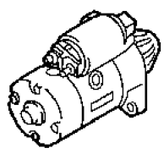	**008–200** Alternators 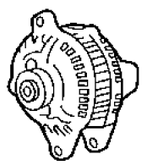	**008–400** Modules 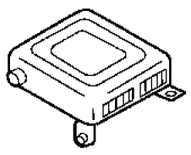	**008–500** Relays 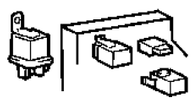
008–600 Sensors 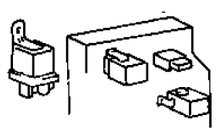	**008–700** Single Board Engine Controllers 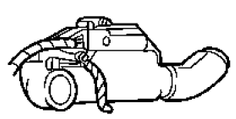	**008–800** Switches 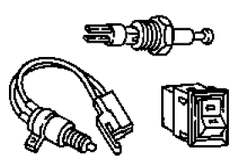	**008–900** Horns 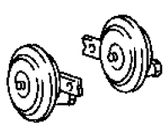

Group – 008

Electrical

008–1000 Battery Tray and Cables 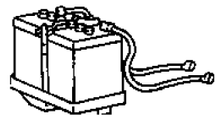	**008–1100** Lamps – Front, Rear and Courtesy 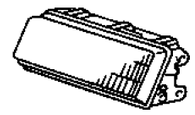	**008–1200** Wiring–Engine & Related Parts 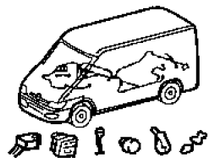	**008–1300** Wiring–Headlamp to Dash 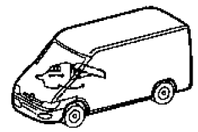
008–1400 Wiring–Instrument Panel 	**008–1500** Wiring–Body & Accessories 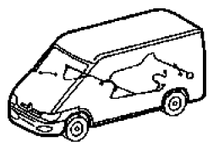	**008–1600** Wiring Repair 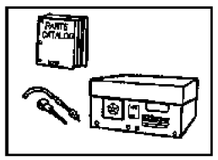	**008–1700** Air Bag Systems
008–1800 Park Assist 	**008–1900** Spark Plugs–Cables–Coils 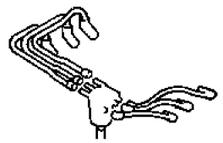		

Illustration Title — Group-Fig. No.

Starters
Starters & Mounting . . . Fig. 008-105

Alternators
Alternators (Generator) . . . Fig. 008-205

Modules
Modules Seating Area . . . Fig. 008-405
Modules and Related Parts . . . Fig. 008-410

Relays
Under Seat - Relays & Fuses . . . Fig. 008-505
Instrument Panel - Relays & Fuses . . . Fig. 008-510

Sensors
Sensors Engine . . . Fig. 008-605
Sensors - Drivetrain . . . Fig. 008-610
Sensors - Brakes . . . Fig. 008-615
Sensors Ambient Temperature and Rain . . . Fig. 008-620

Single Board Engine Controllers
Powertrain Control . . . Fig. 008-715

Switches
Switches - Instrument Panel . . . Fig. 008-805
Switches -Steering Column . . . Fig. 008-810
Switches - Doors . . . Fig. 008-815
Switch Brake and Clutch . . . Fig. 008-820

Horns
Horns & Alarm . . . Fig. 008-905

Battery Tray and Cables
Battery Tray & Cables . . . Fig. 008-1005

Lamps - Front, Rear and Courtesy
Lamps - Front End . . . Fig. 008-1105
Lamps - Rear End . . . Fig. 008-1110
Lamps Rear End Cab and Chassis Vehicles . . . Fig. 008-1115
Lamps Interior Passenger Van . . . Fig. 008-1120
Lamps Interior Cargo Van . . . Fig. 008-1125
Lamp - Bulbs . . . Fig. 008-1130

Wiring-Engine & Related Parts
Wiring - Engine . . . Fig. 008-1205

Wiring-Headlamp to Dash
Wiring - Headlamp & Dash . . . Fig. 008-1305

Wiring-Instrument Panel
Wiring - Instrument Panel . . . Fig. 008-1405

GROUP 8 - Electrical

Illustration Title — Group-Fig. No.

Wiring-Body & Accessories
Wiring - Body & Accessories . . . Fig. 008-1505

Wiring Repair
Connectors Engine Compartment . . . Fig. 008-1605
Connectors Body . . . Fig. 008-1610
Connectors Roof . . . Fig. 008-1615
Connectors Front Doors . . . Fig. 008-1620
Connectors Rear Doors . . . Fig. 008-1625
Connectors Seating Area . . . Fig. 008-1630

Air Bag Systems
Air Bag System Drivers Side . . . Fig. 008-1705
Air Bag System Passenger Side . . . Fig. 008-1710

Park Assist
Park Assist, Back up Detection System . . . Fig. 008-1805

Spark Plugs-Cables-Coils
Glow Plugs . . . Fig. 008-1910

Starters & Mounting
Figure 008-105

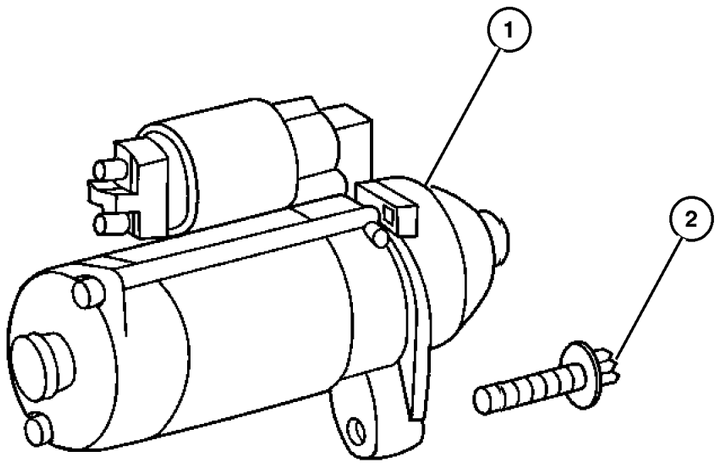

ITEM	PART NUMBER	QTY	LINE	SERIES	BODY	ENGINE	TRANS	TRIM	DESCRIPTION
1									STARTER, Engine
	5134 510AA	1	2, 6	L	01, 02, 06	EX8	DGZ		
		1	2, 6	L	11, 12, 14, 15, 16	EX8	DGZ		
		1	2, 6	L	51, 52, 54, 55, 56	EX8	DGZ		
		1	3, 7	L	02, 06	EX8	DGZ		
		1	3, 7	L	12, 15, 16	EX8	DGZ		
2									SCREW, Starter Motor
	6104 053AA	2	2, 6	L	01, 02, 06	EX8	DGZ		
		2	2, 6	L	11, 12, 14, 15, 16	EX8	DGZ		
		2	2, 6	L	51, 52, 54, 55, 56	EX8	DGZ		
		2	3, 7	L	02, 06	EX8	DGZ		
		2	3, 7	L	12, 15, 16	EX8	DGZ		

Refer to Model Legend Information Bookmark

AR = Use as required - = Non illustrated part # = New this model year

March 3, 2006

« RETURN TO GROUP INDEX

Alternators (Generator)
Figure 008-205

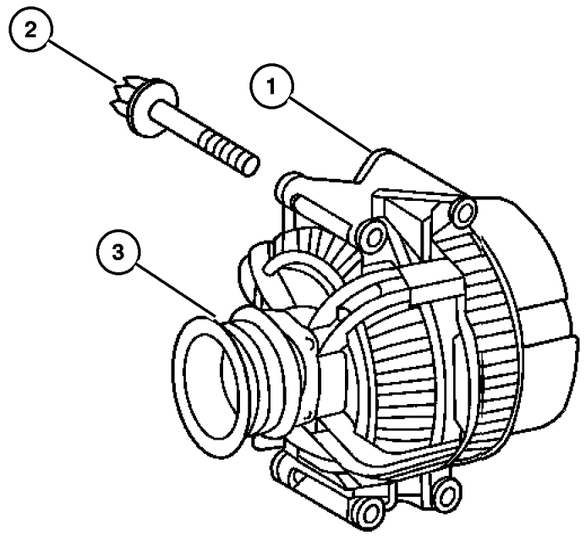

ITEM	PART NUMBER	QTY	LINE	SERIES	BODY	ENGINE	TRANS	TRIM	DESCRIPTION
1	5134 199AA	1	2, 3, 6, 7	L		EX8	DGZ		ALTERNATOR
2									SCREW
	6104 035AA	2	2, 6	L	01, 02, 06	EX8	DGZ		
		1	2, 6	L	51, 52, 54, 55, 56	EX8	DGZ		
		2	2, 6	L	51, 52, 54, 55, 56	EX8	DGZ		
		2	3, 7	L	02, 06	EX8	DGZ		
		2	3, 7	L	12, 15, 16	EX8	DGZ		
3	5117 591AA	1	2, 3, 6, 7	L		EX8	DGZ		PULLEY, Alternator
-4									REGULATOR, Alternator
	5135 837AA-	1	2, 6	L	01, 02, 06	EX8	DGZ		
		1	2, 6	L	11, 12, 14, 15, 16	EX8	DGZ		
		1	2, 6	L	51, 52, 54, 55, 56	EX8	DGZ		
		1	3, 7	L	02, 06	EX8	DGZ		
		1	3, 7	L	12, 15, 16	EX8	DGZ		

Refer to Model Legend Information Bookmark

AR = Use as required - = Non illustrated part # = New this model year

March 3, 2006

RETURN TO GROUP INDEX

Modules Seating Area
Figure 008-405

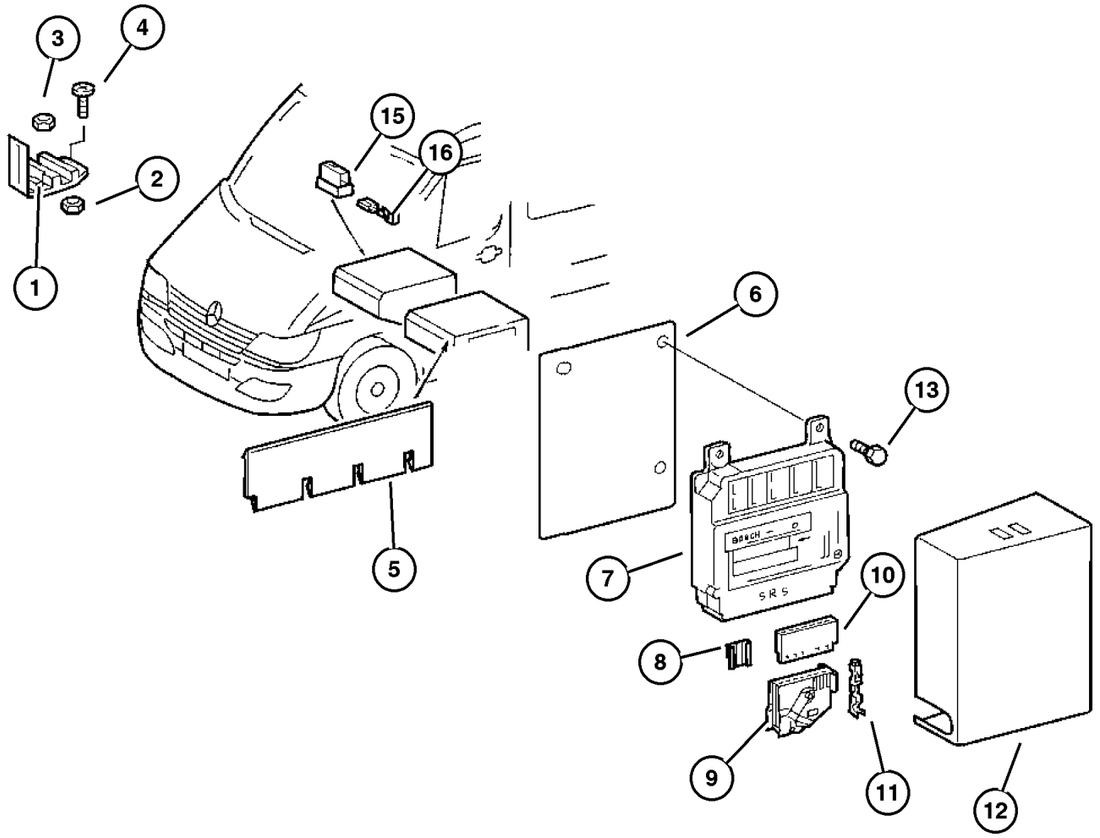

ITEM	PART NUMBER	QTY	LINE	SERIES	BODY	ENGINE	TRANS	TRIM	DESCRIPTION
1									RETAINER, Wiring Harness
	5120 249AA	1	2, 6	L	01, 02, 06	EX8	DGZ		
		1	2, 6	L	11, 12, 14, 15, 16	EX8	DGZ		
		1	2, 6	L	51, 52, 54, 55, 56	EX8	DGZ		
		1	3, 7	L	02, 06	EX8	DGZ		
		1	3, 7	L	12, 15, 16	EX8	DGZ		
2									NUT
	5126 203AA	1	2, 6	L	01, 02, 06	EX8	DGZ		
		1	2, 6	L	11, 12, 14, 15, 16	EX8	DGZ		
		1	2, 6	L	51, 52, 54, 55, 56	EX8	DGZ		
		2	3, 7	L	02, 06	EX8	DGZ		
		2	3, 7	L	12, 15, 16	EX8	DGZ		
3									NUT
	5126 203AA	1	2, 6	L	01, 02, 06	EX8	DGZ		
		1	2, 6	L	11, 12, 14, 15, 16	EX8	DGZ		
		1	2, 6	L	51, 52, 54, 55, 56	EX8	DGZ		
		1	3, 7	L	02, 06	EX8	DGZ		
		1	3, 7	L	12, 15, 16	EX8	DGZ		
4									BOLT, Hex Head
	5126 100AA	2	2, 6	L	01, 02, 06	EX8	DGZ		
		2	2, 6	L	11, 12, 14, 15, 16	EX8	DGZ		
		2	2, 6	L	51, 52, 54, 55, 56	EX8	DGZ		

Refer to Model Legend Information Bookmark

Modules Seating Area
Figure 008-405

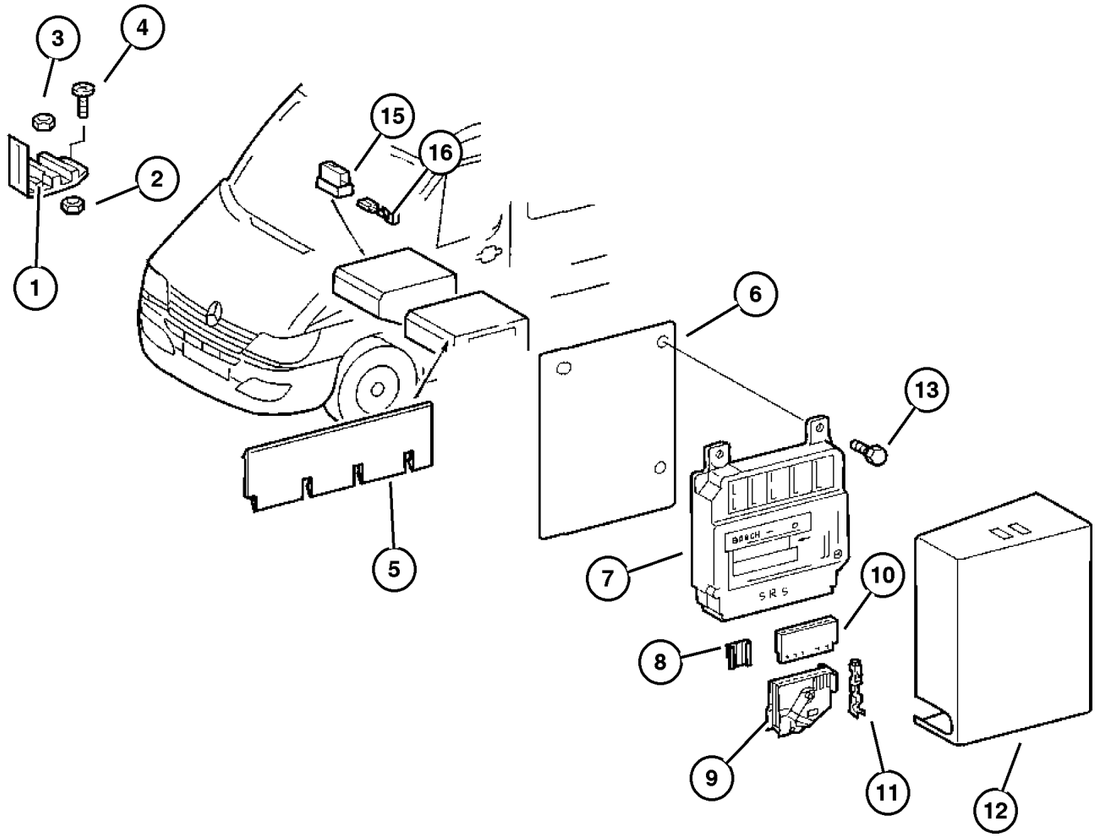

ITEM	PART NUMBER	QTY	LINE	SERIES	BODY	ENGINE	TRANS	TRIM	DESCRIPTION
		2	3, 7	L	02, 06	EX8	DGZ		
		2	3, 7	L	12, 15, 16	EX8	DGZ		
5									PANEL, Seat Base
	5123 542AA	2	2, 6	L	11, 12, 14, 15, 16	EX8	DGZ		
		2	2, 6	L	12, 15	EX8	DGZ		
		2	2, 6	L	51, 52, 54, 55, 56	EX8	DGZ		
		2	2, 6	L	52, 55	EX8	DGZ		
		2	3, 7	L	12, 15	EX8	DGZ		
		6	3, 7	L	16	EX8	DGZ		
6									PLATE, Air Bag Module
	5120 891AA	1	2, 6	L	01, 02, 06	EX8	DGZ		
		1	2, 6	L	11, 12, 14, 15, 16	EX8	DGZ		
		1	2, 6	L	51, 52, 54, 55, 56	EX8	DGZ		
		1	3, 7	L	02, 06	EX8	DGZ		
		1	3, 7	L	12, 15, 16	EX8	DGZ		
7									MODULE, Air Bag Control
	5119 435AA	1	2, 6	L	01, 02, 06	EX8	DGZ		
		1	2, 6	L	11, 12, 14, 15, 16	EX8	DGZ		
		1	2, 6	L	51, 52, 54, 55, 56	EX8	DGZ		
		1	3, 7	L	02, 06	EX8	DGZ		
		1	3, 7	L	12, 15, 16	EX8	DGZ		
8									COVER, Insulator, Wiring Protection
	5120 412AA	1	2, 6	L	01, 02, 06	EX8	DGZ		
		1	2, 6	L	11, 12, 14, 15, 16	EX8	DGZ		

Refer to Model Legend Information Bookmark

AR = Use as required - = Non illustrated part # = New this model year

March 3, 2006

« RETURN TO GROUP INDEX

Modules Seating Area
Figure 008-405

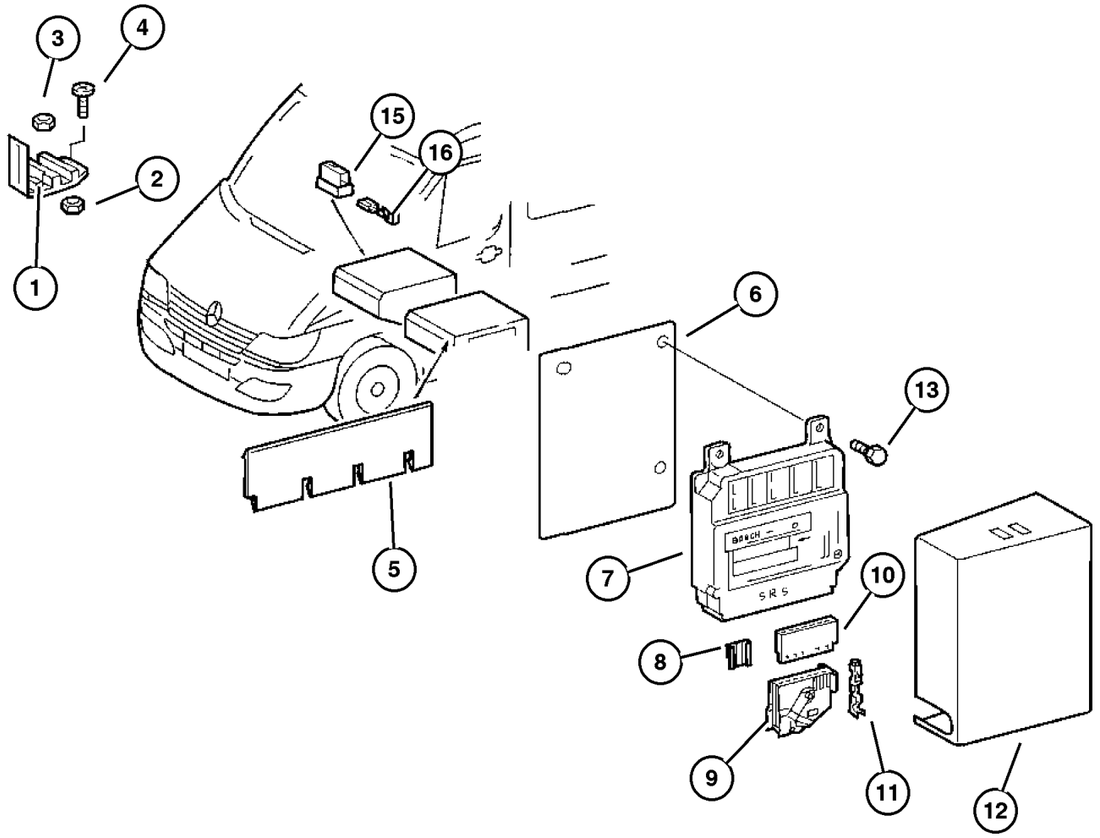

ITEM	PART NUMBER	QTY	LINE	SERIES	BODY	ENGINE	TRANS	TRIM	DESCRIPTION
		1	2, 6	L	51, 52, 54, 55, 56	EX8	DGZ		
		1	3, 7	L	02, 06	EX8	DGZ		
		1	3, 7	L	12, 15, 16	EX8	DGZ		
9	5120 799AA	1	2, 6	L	01, 02, 06	EX8	DGZ		CONNECTOR, Wiring
		1	2, 6	L	11, 12, 14, 15, 16	EX8	DGZ		
		1	2, 6	L	51, 52, 54, 55, 56	EX8	DGZ		
		1	3, 7	L	02, 06	EX8	DGZ		
		1	3, 7	L	12, 15, 16	EX8	DGZ		
10	5120 834AA	1	2, 6	L	01, 02, 06	EX8	DGZ		CONNECTOR
		1	2, 6	L	11, 12, 14, 15, 16	EX8	DGZ		
		1	2, 6	L	51, 52, 54, 55, 56	EX8	DGZ		
		1	3, 7	L	02, 06	EX8	DGZ		
		1	3, 7	L	12, 15, 16	EX8	DGZ		
11	5120 549AA	1	2, 6	L	01, 02, 06	EX8	DGZ		TERMINAL
		1	2, 6	L	11, 12, 14, 15, 16	EX8	DGZ		
		1	2, 6	L	51, 52, 54, 55, 56	EX8	DGZ		
		1	3, 7	L	02, 06	EX8	DGZ		
		1	3, 7	L	12, 15, 16	EX8	DGZ		
12	5104 148AA	1	2, 6	L	01, 02, 06	EX8	DGZ		COVER, Air Bag Module

Refer to Model Legend Information Bookmark

Modules Seating Area
Figure 008-405

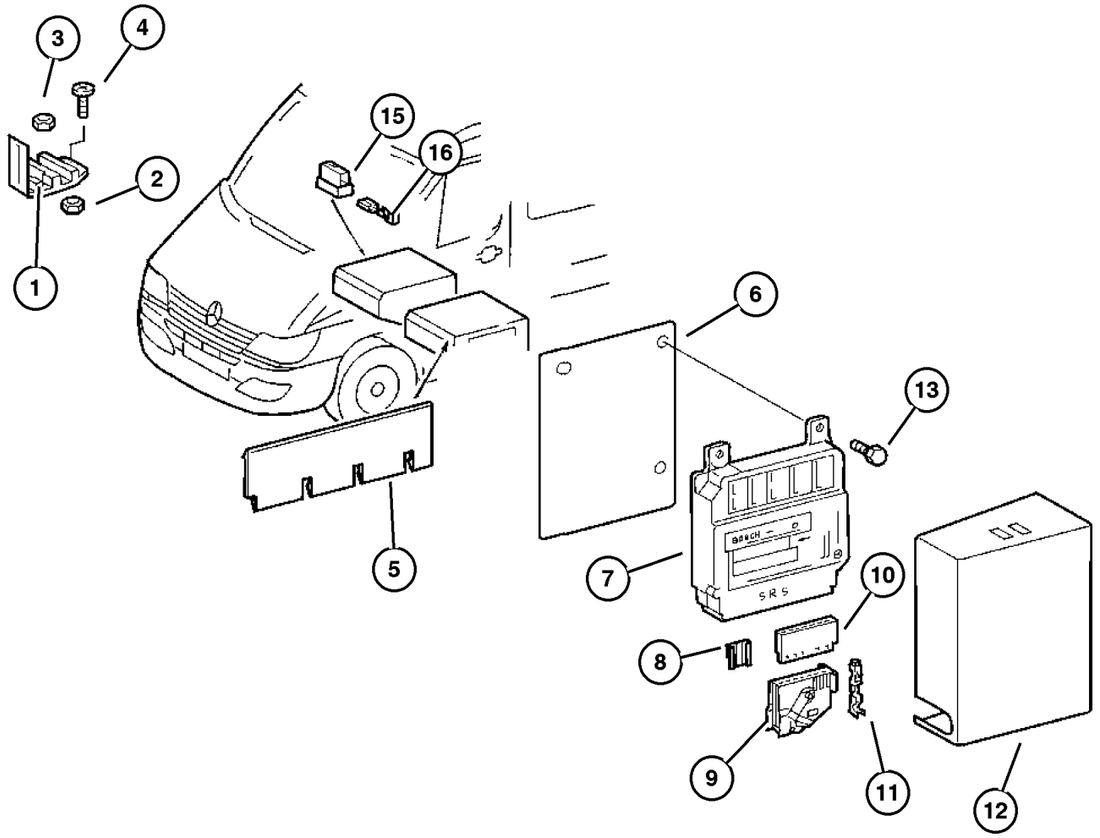

ITEM	PART NUMBER	QTY	LINE	SERIES	BODY	ENGINE	TRANS	TRIM	DESCRIPTION
		1	2, 6	L	11, 12, 14, 15, 16	EX8	DGZ		
		1	2, 6	L	51, 52, 54, 55, 56	EX8	DGZ		
		1	3, 7	L	02, 06	EX8	DGZ		
		1	3, 7	L	12, 15, 16	EX8	DGZ		
13									SCREW
	6104 005AA	2	2, 6	L	11, 12, 14, 15, 16	EX8	DGZ		
		2	2, 6	L	51, 52, 54, 55, 56	EX8	DGZ		
		3	2, 6	L	01, 02, 06	EX8	DGZ		
		3	3, 7	L	02, 06	EX8	DGZ		
		3	3, 7	L	12, 15, 16	EX8	DGZ		
-14									SOCKET, Accessory, Outlet
	5120 515AA-	1	2, 6	L	01, 02, 06	EX8	DGZ		
		1	2, 6	L	11, 12, 14, 15, 16	EX8	DGZ		
		1	2, 6	L	51, 52, 54, 55, 56	EX8	DGZ		
		1	3, 7	L	02, 06	EX8	DGZ		
		1	3, 7	L	12, 15, 16	EX8	DGZ		
15									INSULATOR, 2 Way Female
	5103 754AA	1	2, 6	L	01, 02, 06	EX8	DGZ		
		1	2, 6	L	11, 12, 14, 15, 16	EX8	DGZ		
		1	2, 6	L	51, 52, 54, 55, 56	EX8	DGZ		
		2	3, 7	L	02, 06	EX8	DGZ		
		2	3, 7	L	12, 15, 16	EX8	DGZ		
16									TERMINAL, Female

Refer to Model Legend Information Bookmark

Modules Seating Area
Figure 008-405

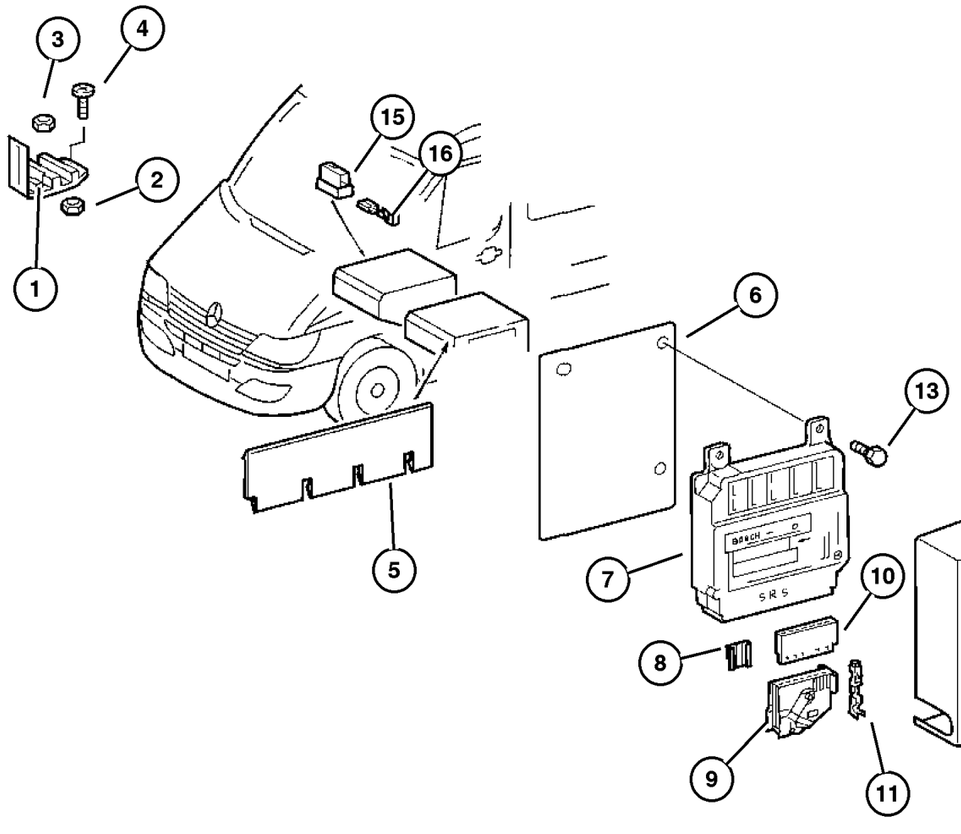

ITEM	PART NUMBER	QTY	LINE	SERIES	BODY	ENGINE	TRANS	TRIM	DESCRIPTION
	5133 359AA	1	2, 6	L	01, 02, 06	EX8	DGZ		
		1	2, 6	L	11, 12, 14, 15, 16	EX8	DGZ		
		1	2, 6	L	51, 52, 54, 55, 56	EX8	DGZ		
		1	3, 7	L	02, 06	EX8	DGZ		
		1	3, 7	L	12, 15, 16	EX8	DGZ		

Refer to Model Legend Information Bookmark

AR = Use as required - = Non illustrated part # = New this model year

March 3, 2006

« RETURN TO GROUP INDEX

«

Modules and Related Parts
Figure 008-410

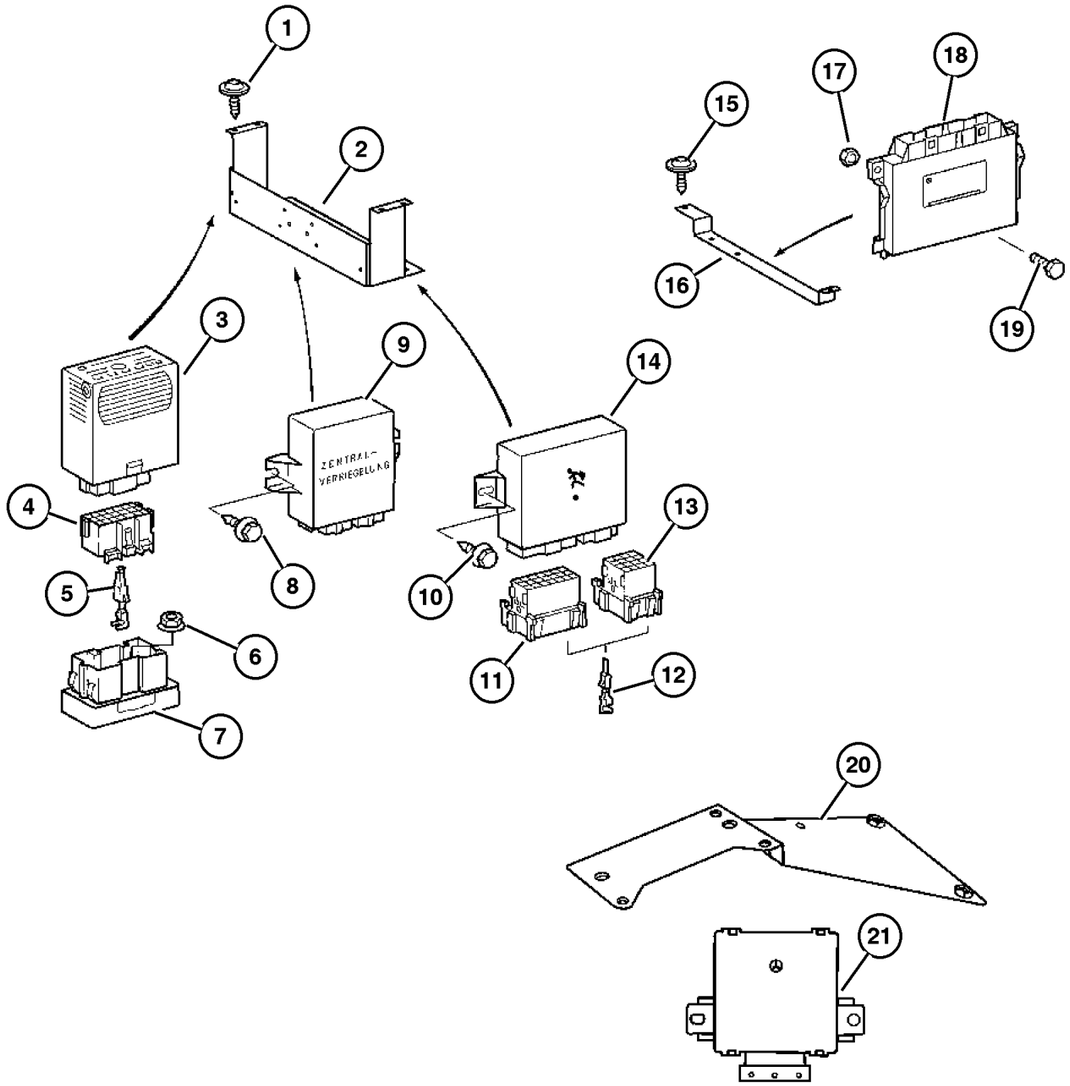

ITEM	PART NUMBER	QTY	LINE	SERIES	BODY	ENGINE	TRANS	TRIM	DESCRIPTION
1									SCREW, Tapping
	6104 573AA	2	2, 6	L	01, 02, 06	EX8	DGZ		
		2	2, 6	L	11, 12, 14, 15, 16	EX8	DGZ		
		2	2, 6	L	51, 52, 54, 55, 56	EX8	DGZ		
		2	3, 7	L	02, 06	EX8	DGZ		
		2	3, 7	L	12, 15, 16	EX8	DGZ		
2									BRACKET, Fuse Block
	5120 844AA	1	2, 6	L	01, 02, 06	EX8	DGZ		
		1	2, 6	L	11, 12, 14, 15, 16	EX8	DGZ		
		1	2, 6	L	51, 52, 54, 55, 56	EX8	DGZ		
		1	3, 7	L	02, 06	EX8	DGZ		
		1	3, 7	L	12, 15, 16	EX8	DGZ		
3									FLASHER MODULE, FLASHER MODULE-TURN SIGNAL
	5139 996AA	1	2, 6	L	01, 02, 06	EX8	DGZ		
		1	2, 6	L	11, 12, 14, 15, 16	EX8	DGZ		
		1	2, 6	L	51, 52, 54, 55, 56	EX8	DGZ		
		1	3, 7	L	02, 06	EX8	DGZ		
		1	3, 7	L	12, 15, 16	EX8	DGZ		
4									CONNECTOR
	5133 333AA	1	2, 6	L	01, 02, 06	EX8	DGZ		
		1	2, 6	L	11, 12, 14, 15, 16	EX8	DGZ		

Refer to Model Legend Information Bookmark

AR = Use as required - = Non illustrated part # = New this model year

March 3, 2006

« RETURN TO GROUP INDEX

»

Modules and Related Parts
Figure 008-410

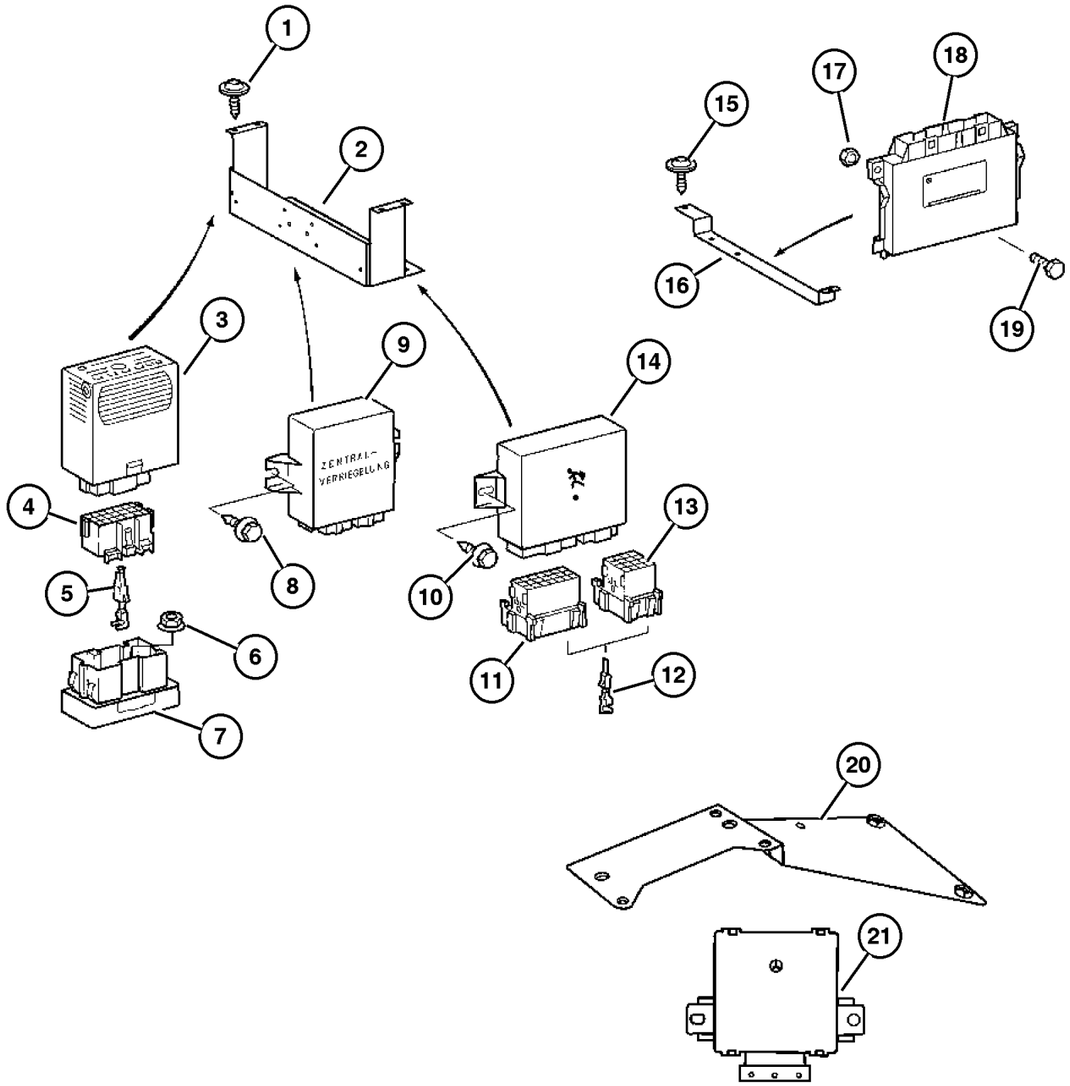

ITEM	PART NUMBER	QTY	LINE	SERIES	BODY	ENGINE	TRANS	TRIM	DESCRIPTION
		1	2, 6	L	51, 52, 54, 55, 56	EX8	DGZ		
		1	3, 7	L	02, 06	EX8	DGZ		
		1	3, 7	L	12, 15, 16	EX8	DGZ		
5	5103 881AA	99	2, 6	L	01, 02, 06	EX8	DGZ		TERMINAL
		99	2, 6	L	11, 12, 14, 15, 16	EX8	DGZ		
		99	2, 6	L	51, 52, 54, 55, 56	EX8	DGZ		
		99	3, 7	L	02, 06	EX8	DGZ		
		99	3, 7	L	12, 15, 16	EX8	DGZ		
6	6104 714AA	2	2, 6	L	01, 02, 06	EX8	DGZ		NUT
		2	2, 6	L	11, 12, 14, 15, 16	EX8	DGZ		
		2	2, 6	L	51, 52, 54, 55, 56	EX8	DGZ		
		2	3, 7	L	02, 06	EX8	DGZ		
		2	3, 7	L	12, 15, 16	EX8	DGZ		
7	5139 184AA	1	2, 6	L	01, 02, 06	EX8	DGZ		CONNECTOR
		1	2, 6	L	11, 12, 14, 15, 16	EX8	DGZ		
		1	2, 6	L	51, 52, 54, 55, 56	EX8	DGZ		
		1	3, 7	L	02, 06	EX8	DGZ		
		1	3, 7	L	12, 15, 16	EX8	DGZ		
8	5104 609AA	4	2, 6	L	01, 02, 06	EX8	DGZ		SCREW

Refer to Model Legend Information Bookmark

Modules and Related Parts
Figure 008-410

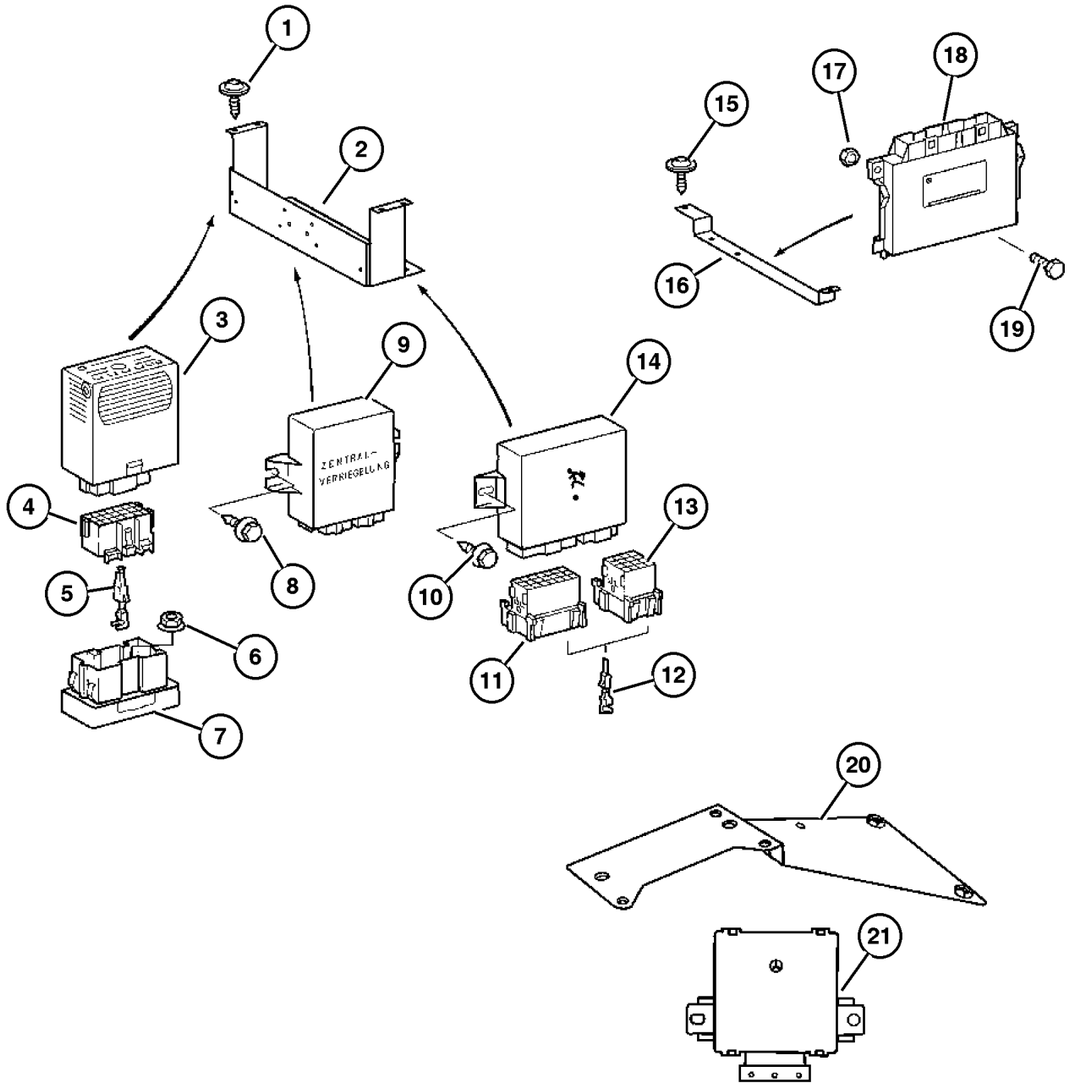

ITEM	PART NUMBER	QTY	LINE	SERIES	BODY	ENGINE	TRANS	TRIM	DESCRIPTION
		4	2, 6	L	11, 12,	EX8	DGZ		
					14, 15,				
					16				
		4	2, 6	L	51, 52,	EX8	DGZ		
					54, 55,				
					56				
		4	3, 7	L	02, 06	EX8	DGZ		
		4	3, 7	L	12, 15,	EX8	DGZ		
					16				
9									MODULE, Central Locking
	5127 217AA	1	2, 6	L	01, 02,	EX8	DGZ		
					06				
		1	2, 6	L	11, 12,	EX8	DGZ		
					14, 15,				
					16				
		1	3, 7	L	02, 06	EX8	DGZ		
		1	3, 7	L	12, 15,	EX8	DGZ		
					16				
	5129 301AA	1	2, 6	L	51, 52,	EX8	DGZ		
					54, 55,				
					56				
10									SCREW, Tapping
	6104 574AA	2	2, 6	L	01, 02,	EX8	DGZ		
					06				
		2	2, 6	L	11, 12,	EX8	DGZ		
					14, 15,				
					16				
		2	2, 6	L	51, 52,	EX8	DGZ		
					54, 55,				
					56				
		2	3, 7	L	02, 06	EX8	DGZ		
		2	3, 7	L	12, 15,	EX8	DGZ		
					16				
11									CONNECTOR
	5133 333AA	1	2, 6	L	01, 02,	EX8	DGZ		
					06				
		1	2, 6	L	11, 12,	EX8	DGZ		
					14, 15,				
					16				
		1	2, 6	L	51, 52,	EX8	DGZ		
					54, 55,				
					56				
		1	3, 7	L	02, 06	EX8	DGZ		
		1	3, 7	L	12, 15,	EX8	DGZ		
					16				
12									TERMINAL

Refer to Model Legend Information Bookmark

Modules and Related Parts
Figure 008-410

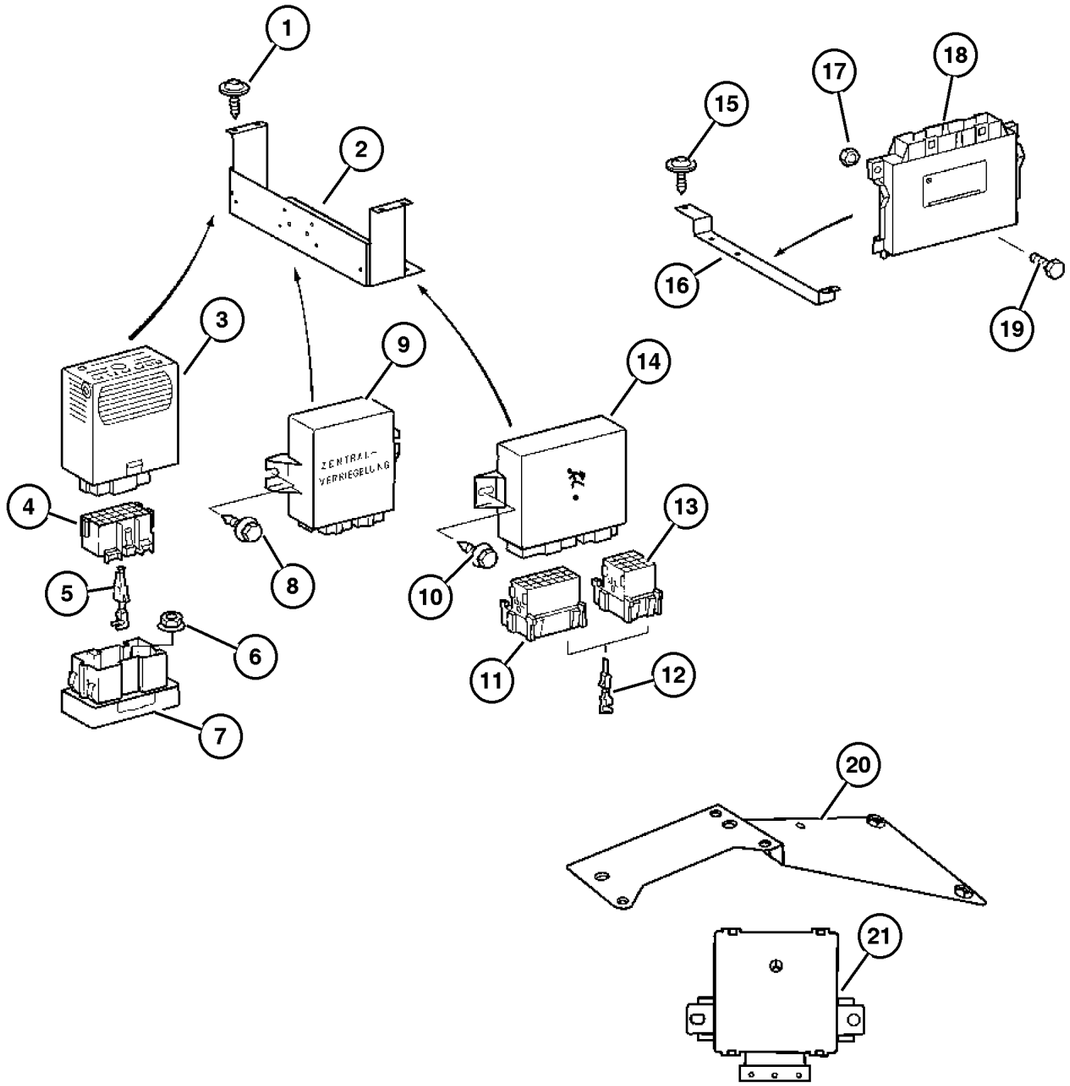

ITEM	PART NUMBER	QTY	LINE	SERIES	BODY	ENGINE	TRANS	TRIM	DESCRIPTION
	5103 882AA	99	2, 6	L	01, 02, 06	EX8	DGZ		
		99	2, 6	L	11, 12, 14, 15, 16	EX8	DGZ		
		99	2, 6	L	51, 52, 54, 55, 56	EX8	DGZ		
		99	3, 7	L	02, 06	EX8	DGZ		
		99	3, 7	L	12, 15, 16	EX8	DGZ		
13									CONNECTOR
	5120 552AA	1	2, 6	L	01, 02, 06	EX8	DGZ		
		1	2, 6	L	11, 12, 14, 15, 16	EX8	DGZ		
		1	2, 6	L	51, 52, 54, 55, 56	EX8	DGZ		
		1	3, 7	L	02, 06	EX8	DGZ		
		1	3, 7	L	12, 15, 16	EX8	DGZ		
		1	3, 7	L	12, 15, 16	EX8	DGZ		
14									CONTROL, theftproof
	5119 439AA	1	2, 6	L	01, 02, 06	EX8	DGZ		
		1	2, 6	L	11, 12, 14, 15, 16	EX8	DGZ		
		1	2, 6	L	51, 52, 54, 55, 56	EX8	DGZ		
		1	3, 7	L	02, 06	EX8	DGZ		
		1	3, 7	L	12, 15, 16	EX8	DGZ		
15									SCREW, Tapping
	6104 573AA	2	2, 6	L	01, 02, 06	EX8	DGZ		
		2	2, 6	L	11, 12, 14, 15, 16	EX8	DGZ		
		2	2, 6	L	51, 52, 54, 55, 56	EX8	DGZ		
		2	3, 7	L	02, 06	EX8	DGZ		

Refer to Model Legend Information Bookmark

Modules and Related Parts
Figure 008-410

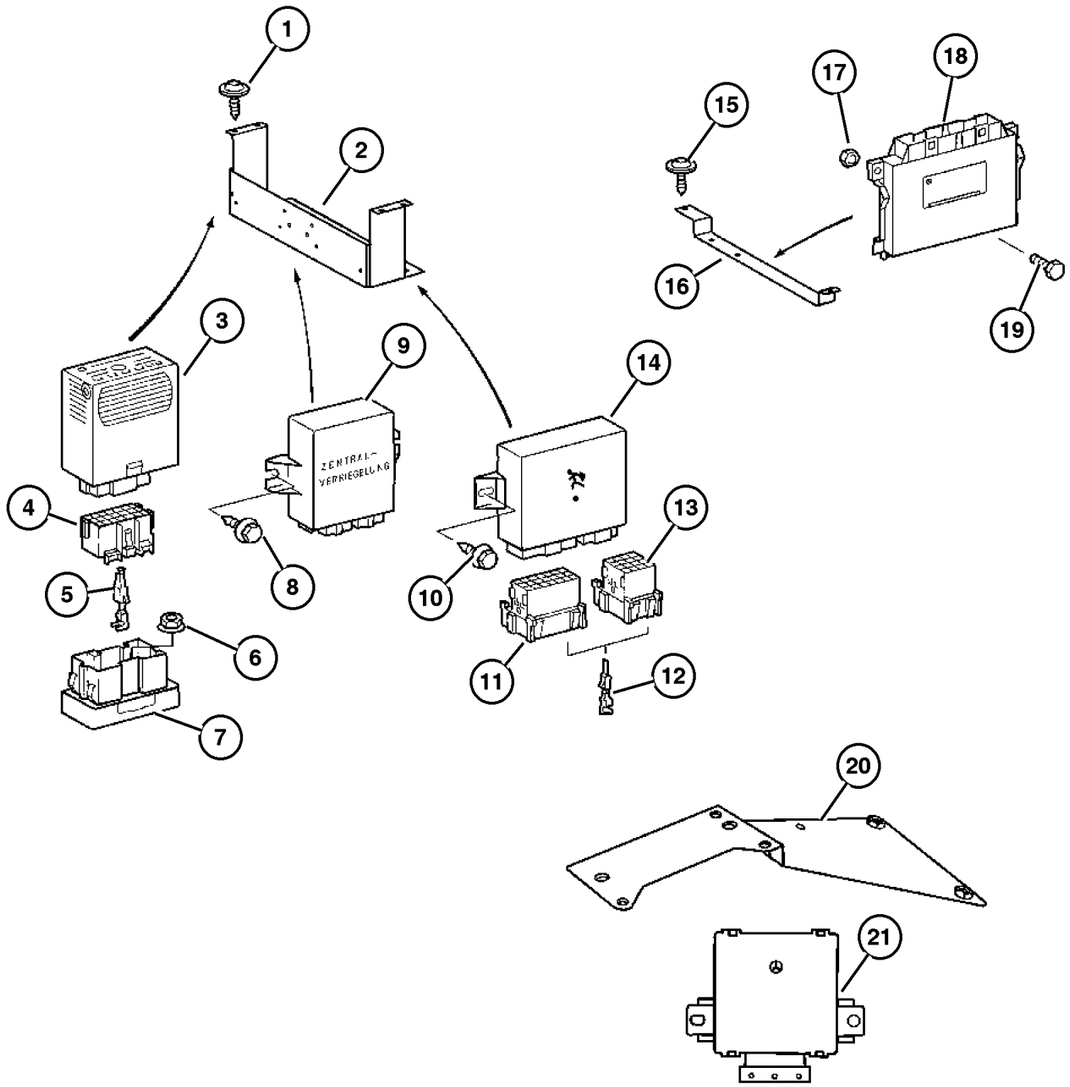

ITEM	PART NUMBER	QTY	LINE	SERIES	BODY	ENGINE	TRANS	TRIM	DESCRIPTION
		2	3, 7	L	12, 15, 16	EX8	DGZ		
16	5120 842AA	2	2, 6	L	01, 02, 06	EX8	DGZ		BRACKET, Control Unit
		2	2, 6	L	11, 12, 14, 15, 16	EX8	DGZ		
		2	2, 6	L	51, 52, 54, 55, 56	EX8	DGZ		
		2	3, 7	L	02, 06	EX8	DGZ		
		2	3, 7	L	12, 15, 16	EX8	DGZ		
17	6104 714AA	2	2, 6	L	01, 02, 06	EX8	DGZ		NUT
		2	2, 6	L	11, 12, 14, 15, 16	EX8	DGZ		
		2	2, 6	L	51, 52, 54, 55, 56	EX8	DGZ		
		2	3, 7	L	02, 06	EX8	DGZ		
		2	3, 7	L	12, 15, 16	EX8	DGZ		
18	5140 526AA	1	2, 6	L	01, 02, 06	EX8	DGZ		MODULE, Transmission Control
		1	2, 6	L	11, 12, 14, 15, 16	EX8	DGZ		
		1	2, 6	L	51, 52, 54, 55, 56	EX8	DGZ		
		1	3, 7	L	02, 06	EX8	DGZ		
		1	3, 7	L	12, 15, 16	EX8	DGZ		
19	6104 173AA	2	2, 6	L	01, 02, 06	EX8	DGZ		SCREW, Hex Head
		2	2, 6	L	11, 12, 14, 15, 16	EX8	DGZ		

Refer to Model Legend Information Bookmark

AR = Use as required - = Non illustrated part # = New this model year

March 3, 2006

« RETURN TO GROUP INDEX

Modules and Related Parts
Figure 008-410

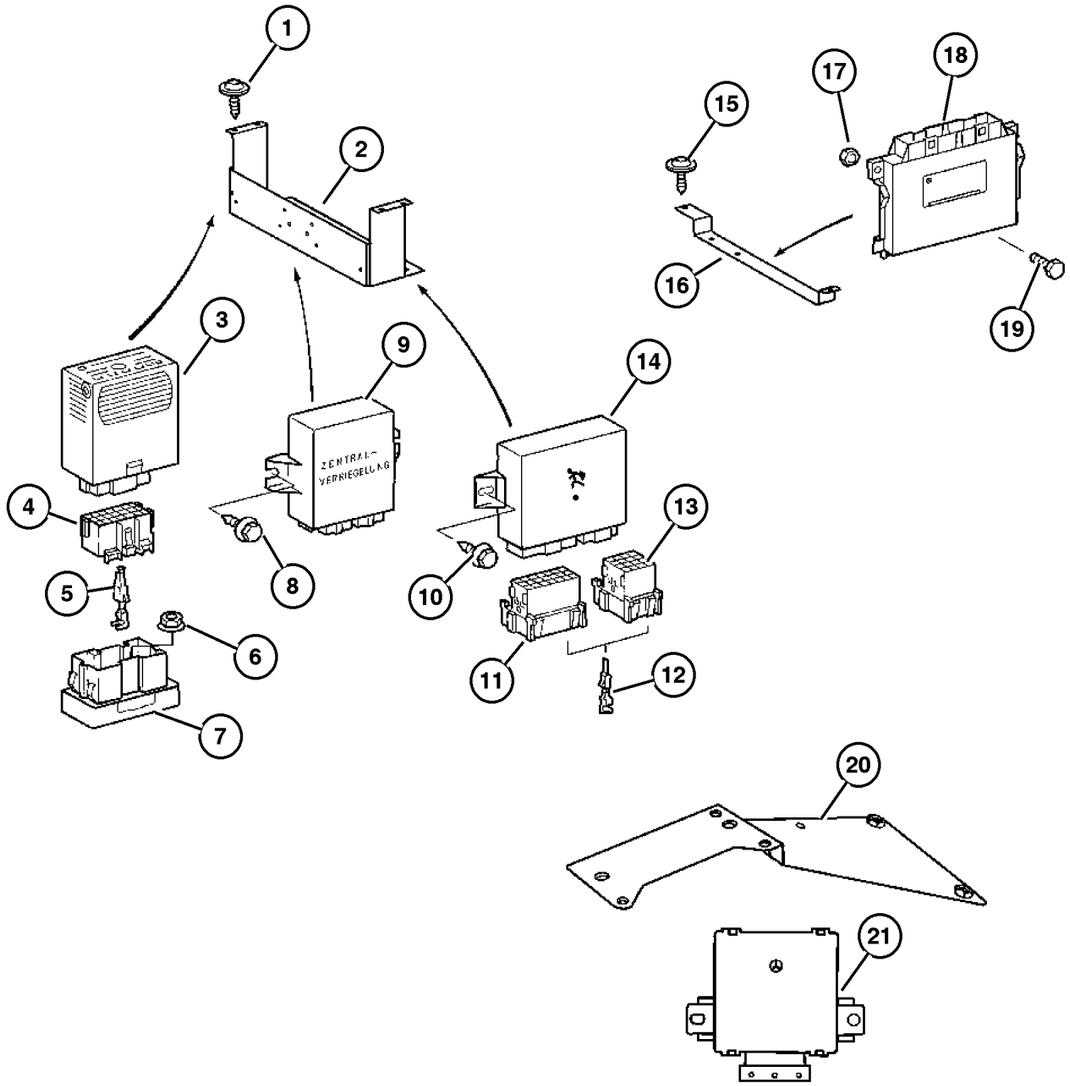

ITEM	PART NUMBER	QTY	LINE	SERIES	BODY	ENGINE	TRANS	TRIM	DESCRIPTION
		2	2, 6	L	51, 52, 54, 55, 56	EX8	DGZ		
		2	3, 7	L	02, 06	EX8	DGZ		
		2	3, 7	L	12, 15, 16	EX8	DGZ		
20	5120 255AA	1	2, 6	L	01, 02, 06	EX8	DGZ		BRACKET, Module
		1	2, 6	L	11, 12, 14, 15, 16	EX8	DGZ		
		1	2, 6	L	51, 52, 54, 55, 56	EX8	DGZ		
		1	3, 7	L	02, 06	EX8	DGZ		
		1	3, 7	L	12, 15, 16	EX8	DGZ		
21	5124 447AA	1	2, 6	L	01, 02, 06	EX8	DGZ		MODULE, Rain Sensor
		1	2, 6	L	11, 12, 14, 15, 16	EX8	DGZ		
		1	2, 6	L	51, 52, 54, 55, 56	EX8	DGZ		
		1	3, 7	L	02, 06	EX8	DGZ		
		1	3, 7	L	12, 15, 16	EX8	DGZ		
-22	6104 075AA-	2	2, 6	L	01, 02, 06	EX8	DGZ		SCREW
		2	2, 6	L	11, 12, 14, 15, 16	EX8	DGZ		
		2	2, 6	L	51, 52, 54, 55, 56	EX8	DGZ		
		2	3, 7	L	02, 06	EX8	DGZ		
		2	3, 7	L	12, 15, 16	EX8	DGZ		

Refer to Model Legend Information Bookmark

Under Seat - Relays & Fuses
Figure 008-505

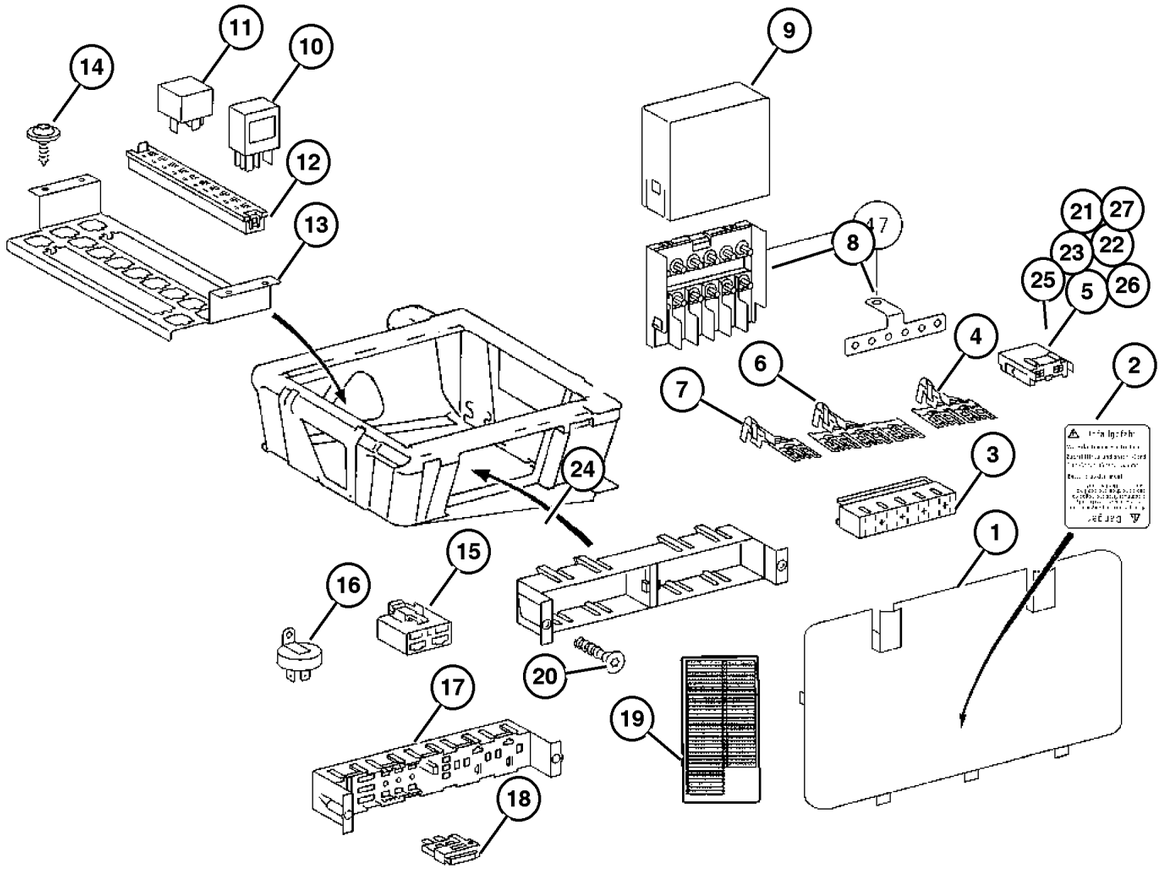

ITEM	PART NUMBER	QTY	LINE	SERIES	BODY	ENGINE	TRANS	TRIM	DESCRIPTION
1									COVER, Fuse Access
	5103 749AA	1	2, 6	L	01, 02, 06	EX8	DGZ		
		1	2, 6	L	11, 12, 14, 15, 16	EX8	DGZ		
		1	2, 6	L	51, 52, 54, 55, 56	EX8	DGZ		
	5133 683AA	1	3, 7	L	02, 06	EX8	DGZ		
		1	3, 7	L	12, 15, 16	EX8	DGZ		
2									LABEL, Warning
	5121 112AA	1	2, 6	L	01, 02, 06	EX8	DGZ		
		1	2, 6	L	11, 12, 14, 15, 16	EX8	DGZ		
		1	2, 6	L	51, 52, 54, 55, 56	EX8	DGZ		
		1	3, 7	L	02, 06	EX8	DGZ		
		1	3, 7	L	12, 15, 16	EX8	DGZ		
3									CONNECTOR
	5120 401AA	1	2, 6	L	01, 02, 06	EX8	DGZ		Number 1 thru 9
		1	2, 6	L	11, 12, 14, 15, 16	EX8	DGZ		Number 1 thru 9
		1	2, 6	L	51, 52, 54, 55, 56	EX8	DGZ		Number 1 thru 9
		1	3, 7	L	02, 06	EX8	DGZ		Number 1 thru 9
		1	3, 7	L	12, 15, 16	EX8	DGZ		Number 1 thru 9
	5120 402AA	1	2, 6	L	01, 02, 06	EX8	DGZ		Number 10 thru 18
		1	2, 6	L	11, 12, 14, 15, 16	EX8	DGZ		Number 10 thru 18
		1	2, 6	L	51, 52, 54, 55, 56	EX8	DGZ		Number 10 thru 18
		1	3, 7	L	02, 06	EX8	DGZ		Number 10 thru 18

Refer to Model Legend Information Bookmark

AR = Use as required - = Non illustrated part # = New this model year

March 3, 2006

« RETURN TO GROUP INDEX

»

Under Seat - Relays & Fuses
Figure 008-505

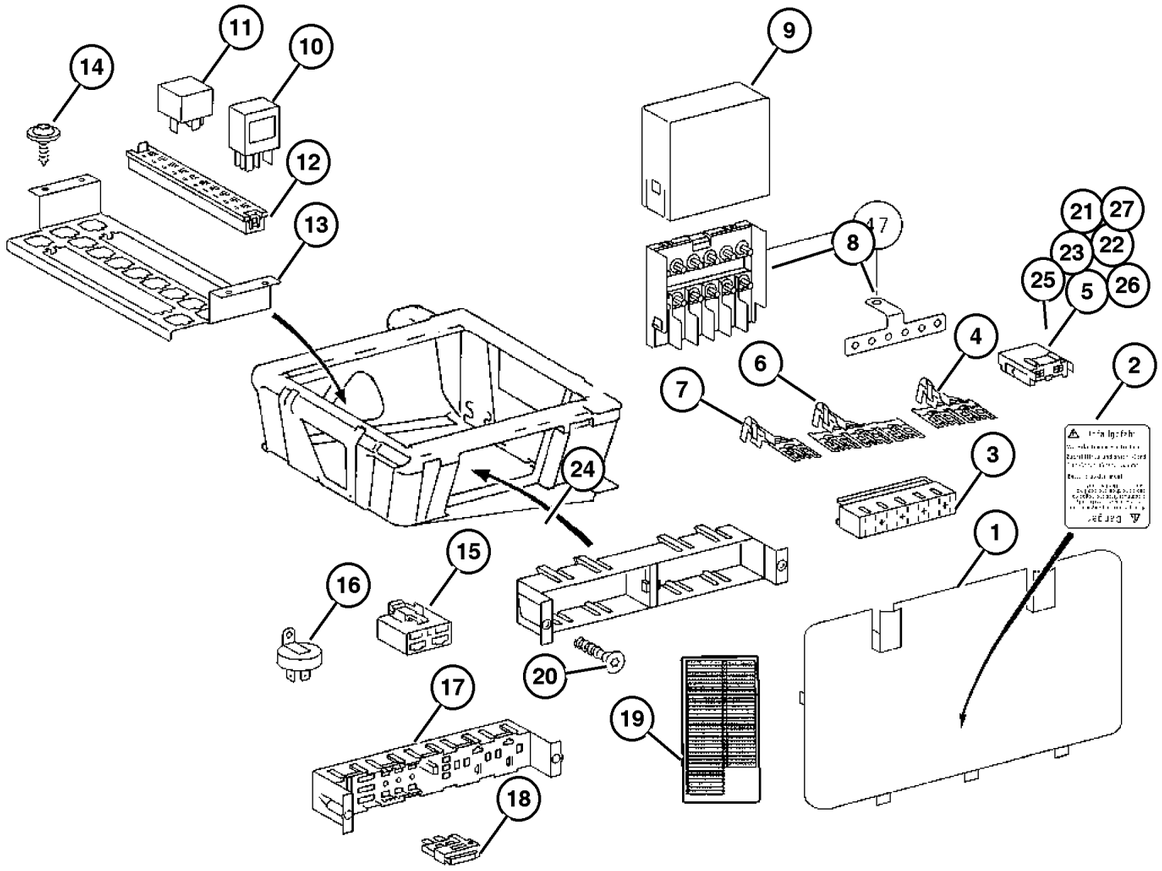

ITEM	PART NUMBER	QTY	LINE	SERIES	BODY	ENGINE	TRANS	TRIM	DESCRIPTION
		1	3, 7	L	12, 15, 16	EX8	DGZ		Number 10 thru 18
	5120 403AA	1	2, 6	L	01, 02, 06	EX8	DGZ		Number 28 thru 36
		1	2, 6	L	11, 12, 14, 15, 16	EX8	DGZ		Number 28 thru 36
		1	2, 6	L	51, 52, 54, 55, 56	EX8	DGZ		Number 28 thru 36
		1	3, 7	L	02, 06	EX8	DGZ		Number 28 thru 36
		1	3, 7	L	12, 15, 16	EX8	DGZ		Number 28 thru 36
4									TERMINAL
	5133 404AA	99	2, 6	L	01, 02, 06	EX8	DGZ		
		99	2, 6	L	11, 12, 14, 15, 16	EX8	DGZ		
		99	2, 6	L	51, 52, 54, 55, 56	EX8	DGZ		
		99	3, 7	L	02, 06	EX8	DGZ		
		99	3, 7	L	12, 15, 16	EX8	DGZ		
5									FUSE
	5133 407AA	1	2, 6	L	01, 02, 06	EX8	DGZ		
		1	2, 6	L	11, 12, 14, 15, 16	EX8	DGZ		
		1	2, 6	L	51, 52, 54, 55, 56	EX8	DGZ		
		1	3, 7	L	02, 06	EX8	DGZ		
		1	3, 7	L	12, 15, 16	EX8	DGZ		
6									TERMINAL
	5133 405AA	99	2, 6	L	01, 02, 06	EX8	DGZ		
		99	2, 6	L	11, 12, 14, 15, 16	EX8	DGZ		

Refer to Model Legend Information Bookmark

AR = Use as required - = Non illustrated part # = New this model year

March 3, 2006

« RETURN TO GROUP INDEX

Under Seat - Relays & Fuses
Figure 008-505

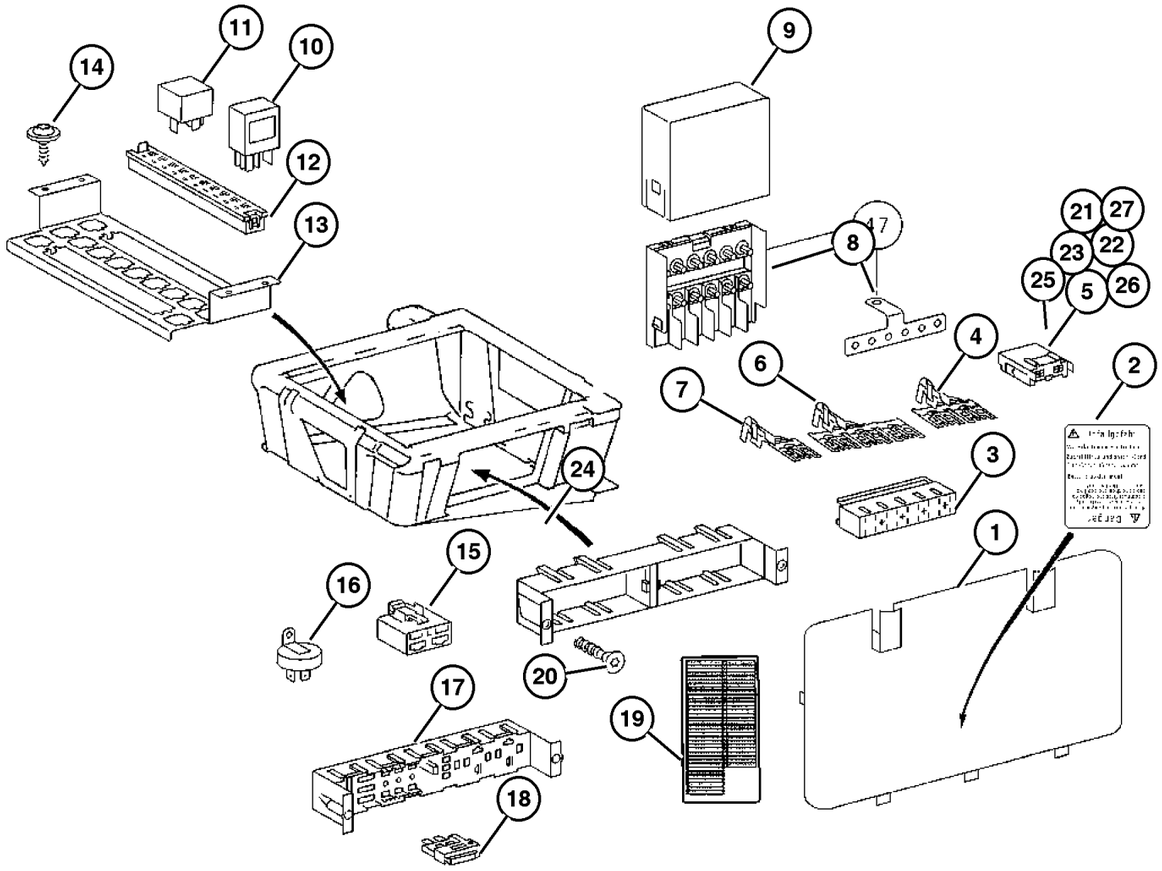

ITEM	PART NUMBER	QTY	LINE	SERIES	BODY	ENGINE	TRANS	TRIM	DESCRIPTION
		99	2, 6	L	51, 52, 54, 55, 56	EX8	DGZ		
		99	3, 7	L	02, 06	EX8	DGZ		
		99	3, 7	L	12, 15, 16	EX8	DGZ		
7	5133 403AA	99	2, 6	L	01, 02, 06	EX8	DGZ		TERMINAL
		99	2, 6	L	11, 12, 14, 15, 16	EX8	DGZ		
		99	2, 6	L	51, 52, 54, 55, 56	EX8	DGZ		
		99	3, 7	L	02, 06	EX8	DGZ		
		99	3, 7	L	12, 15, 16	EX8	DGZ		
8	5103 829AA	1	2, 6	L	01, 02, 06	EX8	DGZ		HOLDER, Fuse
		1	2, 6	L	11, 12, 14, 15, 16	EX8	DGZ		
		1	2, 6	L	51, 52, 54, 55, 56	EX8	DGZ		
		1	3, 7	L	02, 06	EX8	DGZ		
		1	3, 7	L	12, 15, 16	EX8	DGZ		
9	5103 749AA	1	2, 6	L	01, 02, 06	EX8	DGZ		COVER, Fuse Access
		1	2, 6	L	11, 12, 14, 15, 16	EX8	DGZ		
		1	2, 6	L	51, 52, 54, 55, 56	EX8	DGZ		
		1	3, 7	L	02, 06	EX8	DGZ		
		1	3, 7	L	12, 15, 16	EX8	DGZ		
10	5103 560AA	1	2, 6	L	01, 02, 06	EX8	DGZ		RELAY

Refer to Model Legend Information Bookmark

AR = Use as required - = Non illustrated part # = New this model year

March 3, 2006

« RETURN TO GROUP INDEX

Under Seat - Relays & Fuses
Figure 008-505

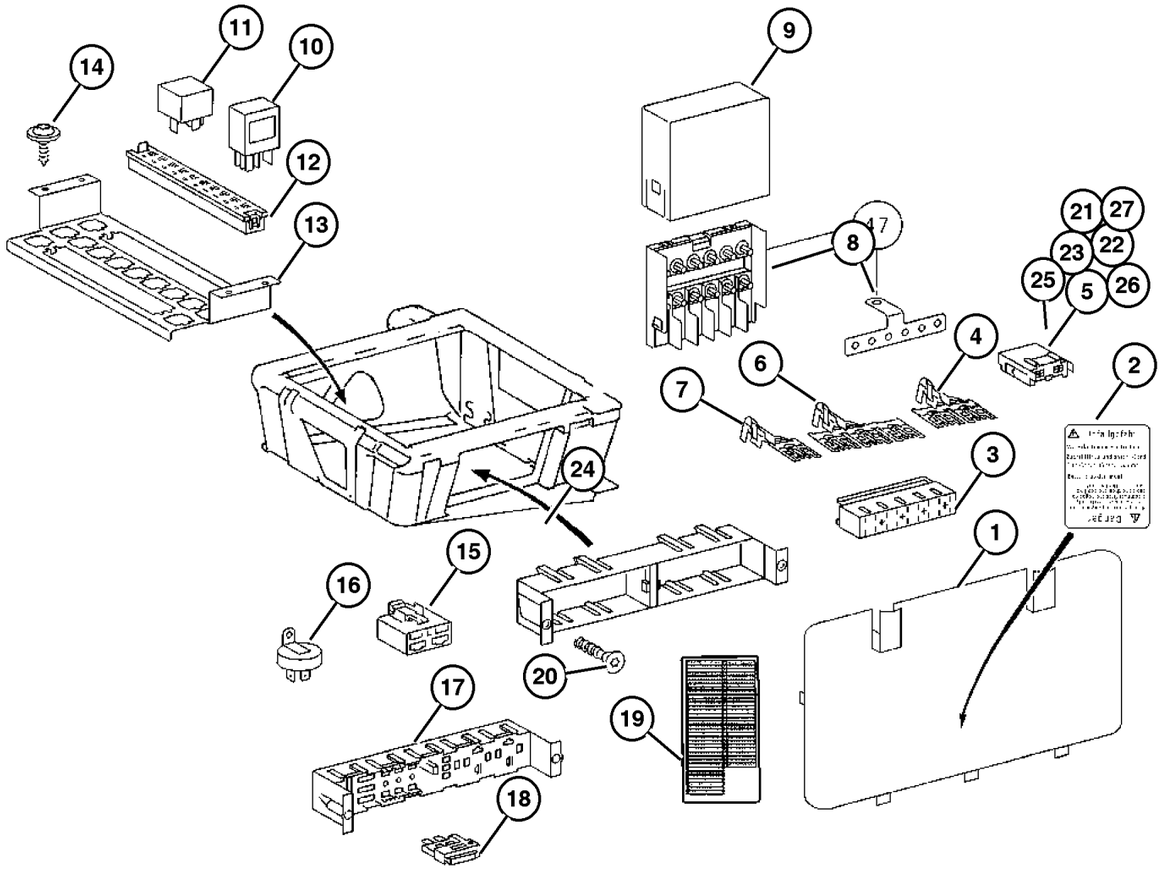

ITEM	PART NUMBER	QTY	LINE	SERIES	BODY	ENGINE	TRANS	TRIM	DESCRIPTION
		1	2, 6	L	11, 12, 14, 15, 16	EX8	DGZ		
		1	2, 6	L	51, 52, 54, 55, 56	EX8	DGZ		
		1	3, 7	L	02, 06	EX8	DGZ		
		1	3, 7	L	12, 15, 16	EX8	DGZ		
11									RELAY
	5103 551AA	1	2, 6	L	01, 02, 06	EX8	DGZ		
		1	2, 6	L	11, 12, 14, 15, 16	EX8	DGZ		
		1	2, 6	L	51, 52, 54, 55, 56	EX8	DGZ		
		1	3, 7	L	02, 06	EX8	DGZ		
		1	3, 7	L	12, 15, 16	EX8	DGZ		
12									CONNECTOR
	5120 374AA	1	2, 6	L	01, 02, 06	EX8	DGZ		
		1	2, 6	L	11, 12, 14, 15, 16	EX8	DGZ		
		1	2, 6	L	51, 52, 54, 55, 56	EX8	DGZ		
		1	3, 7	L	02, 06	EX8	DGZ		
		1	3, 7	L	12, 15, 16	EX8	DGZ		
13									BRACKET, Fuse Block
	5120 840AA	1	2, 6	L	01, 02, 06	EX8	DGZ		
		1	2, 6	L	11, 12, 14, 15, 16	EX8	DGZ		
		1	2, 6	L	51, 52, 54, 55, 56	EX8	DGZ		
		1	3, 7	L	02, 06	EX8	DGZ		
		1	3, 7	L	12, 15, 16	EX8	DGZ		
14									SCREW, Tapping

Refer to Model Legend Information Bookmark

Under Seat - Relays & Fuses
Figure 008-505

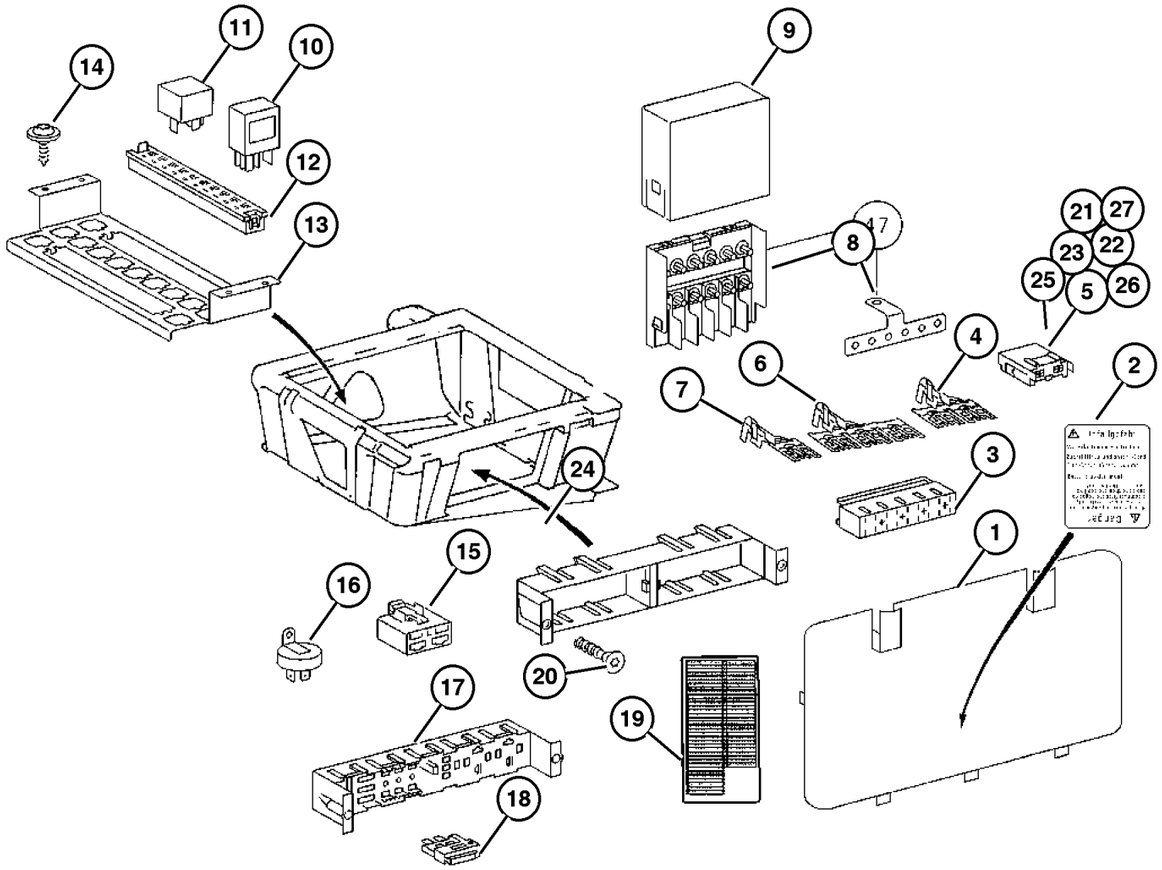

ITEM	PART NUMBER	QTY	LINE	SERIES	BODY	ENGINE	TRANS	TRIM	DESCRIPTION
	6104 573AA	2	2, 6	L	11, 12, 14, 15, 16	EX8	DGZ		
		2	2, 6	L	01, 02, 06	EX8	DGZ		
		2	2, 6	L	51, 52, 54, 55, 56	EX8	DGZ		
		2	3, 7	L	12, 15, 16	EX8	DGZ		
		2	3, 7	L	02, 06	EX8	DGZ		
15									CONNECTOR
	5120 553AA	1	2, 6	L	51, 52, 54, 55, 56	EX8	DGZ		
		1	3, 7	L	02, 06	EX8	DGZ		
		1	3, 7	L	12, 15, 16	EX8	DGZ		
	5120 554AA	1	2, 6	L	01, 02, 06	EX8	DGZ		
		1	2, 6	L	11, 12, 14, 15, 16	EX8	DGZ		
16									DIODE
	5120 186AA	1	2, 6	L	01, 02, 06	EX8	DGZ		
		1	2, 6	L	11, 12, 14, 15, 16	EX8	DGZ		
		1	2, 6	L	51, 52, 54, 55, 56	EX8	DGZ		
		1	3, 7	L	02, 06	EX8	DGZ		
		1	3, 7	L	12, 15, 16	EX8	DGZ		
17									BLOCK, Fuse
	5120 849AA	1	2, 6	L	01, 02, 06	EX8	DGZ		
		1	2, 6	L	11, 12, 14, 15, 16	EX8	DGZ		
		1	2, 6	L	51, 52, 54, 55, 56	EX8	DGZ		
		1	3, 7	L	02, 06	EX8	DGZ		

Refer to Model Legend Information Bookmark

Under Seat - Relays & Fuses
Figure 008-505

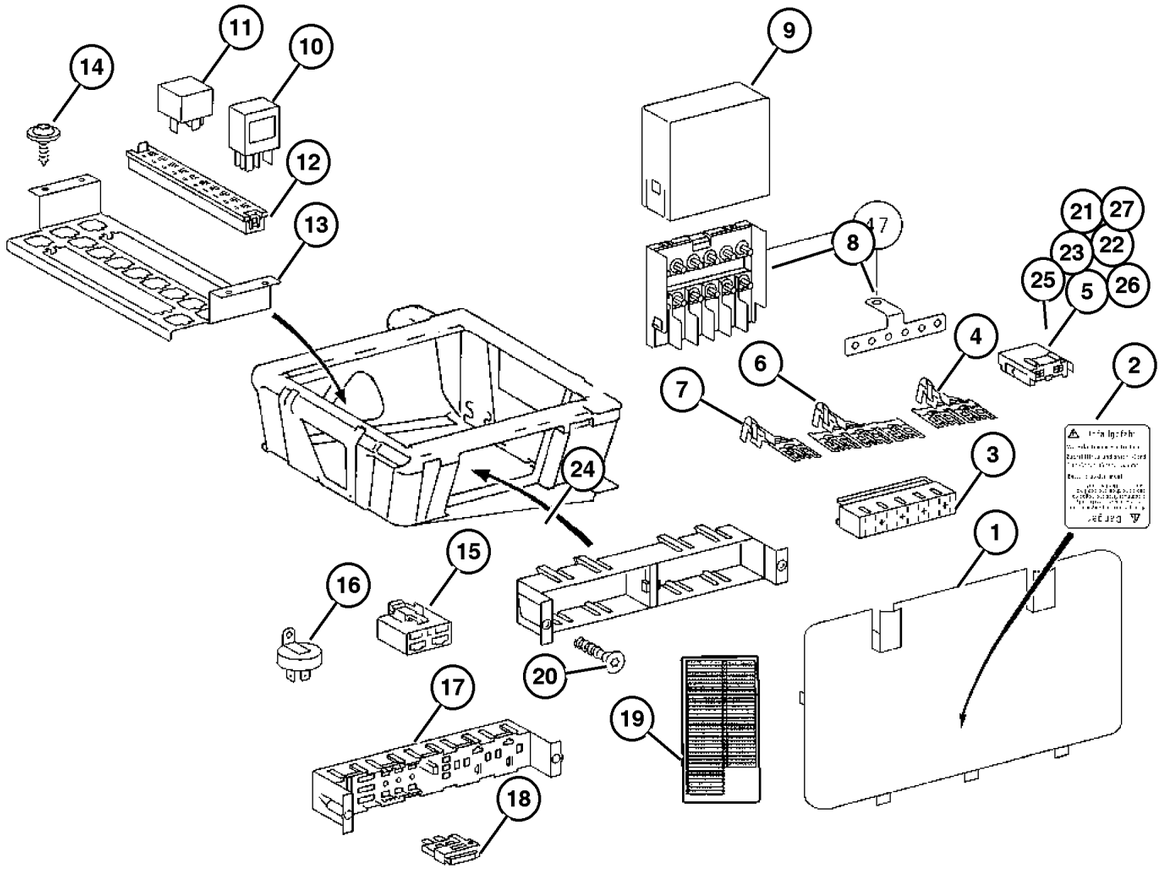

ITEM	PART NUMBER	QTY	LINE	SERIES	BODY	ENGINE	TRANS	TRIM	DESCRIPTION
		1	3, 7	L	12, 15, 16	EX8	DGZ		
18	5120 963AA	1	2, 6	L	01, 02, 06	EX8	DGZ		DIODE
		1	2, 6	L	11, 12, 14, 15, 16	EX8	DGZ		
		1	2, 6	L	51, 52, 54, 55, 56	EX8	DGZ		
		1	3, 7	L	02, 06	EX8	DGZ		
		1	3, 7	L	12, 15, 16	EX8	DGZ		
19	5121 117AA	1	2, 6	L	01, 02, 06	EX8	DGZ		LABEL
		1	2, 6	L	11, 12, 14, 15, 16	EX8	DGZ		
		1	2, 6	L	51, 52, 54, 55, 56	EX8	DGZ		
		1	3, 7	L	02, 06	EX8	DGZ		
		1	3, 7	L	12, 15, 16	EX8	DGZ		
20	6104 654AA	2	2, 6	L	01, 02, 06	EX8	DGZ		SCREW, Counter Sunk
		2	2, 6	L	11, 12, 14, 15, 16	EX8	DGZ		
		2	2, 6	L	51, 52, 54, 55, 56	EX8	DGZ		
		2	3, 7	L	02, 06	EX8	DGZ		
		2	3, 7	L	12, 15, 16	EX8	DGZ		
21	5120 507AA	1	2, 6	L	01, 02, 06	EX8	DGZ		CONNECTOR
		1	2, 6	L	11, 12, 14, 15, 16	EX8	DGZ		

Refer to Model Legend Information Bookmark

AR = Use as required - = Non illustrated part # = New this model year

March 3, 2006

« RETURN TO GROUP INDEX

Under Seat - Relays & Fuses
Figure 008-505

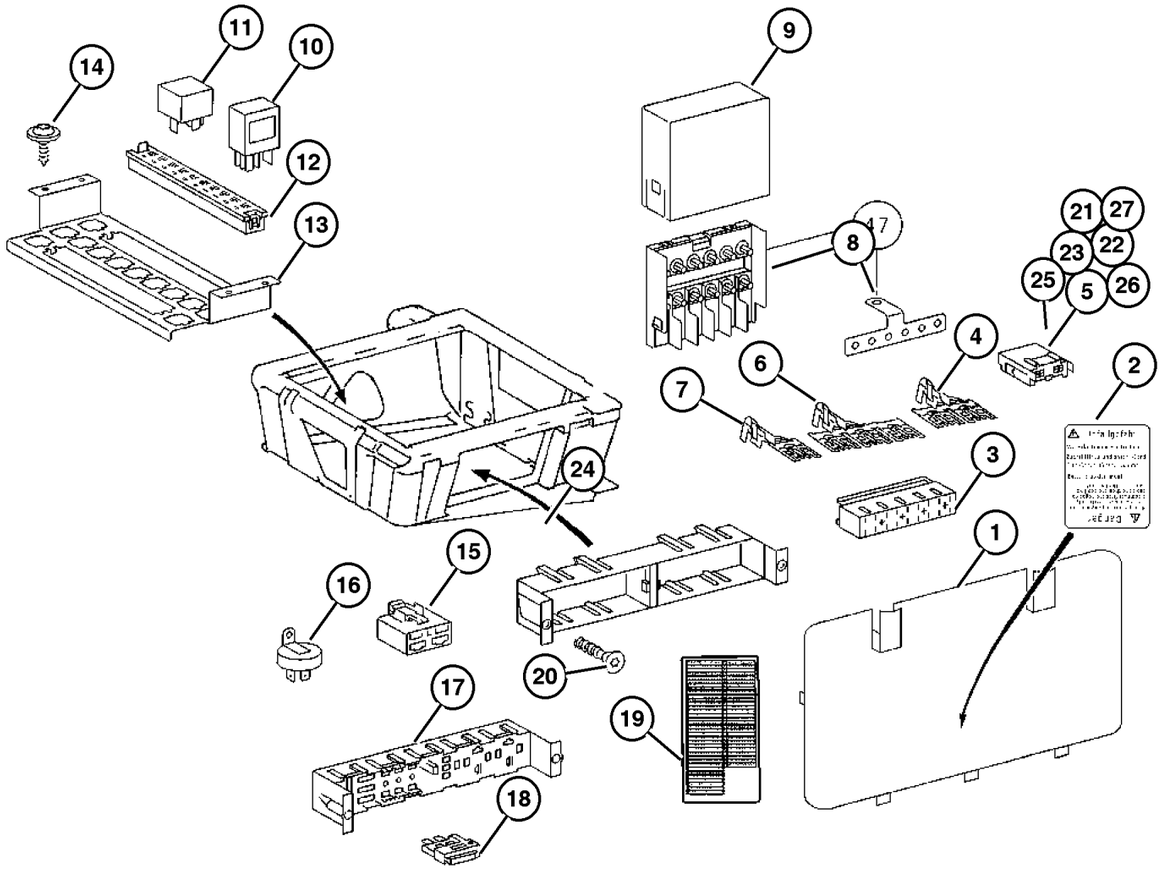

ITEM	PART NUMBER	QTY	LINE	SERIES	BODY	ENGINE	TRANS	TRIM	DESCRIPTION
		1	2, 6	L	51, 52, 54, 55, 56	EX8	DGZ		
		1	3, 7	L	02, 06	EX8	DGZ		
		1	3, 7	L	12, 15, 16	EX8	DGZ		
22	5104 596AA	99	2, 6	L	01, 02, 06	EX8	DGZ		FUSE 200 AMP
		99	2, 6	L	11, 12, 14, 15, 16	EX8	DGZ		200 AMP
		99	2, 6	L	51, 52, 54, 55, 56	EX8	DGZ		200 AMP
		99	3, 7	L	02, 06	EX8	DGZ		200 AMP
		99	3, 7	L	12, 15, 16	EX8	DGZ		200 AMP
23	5104 598AA	99	2, 6	L	01, 02, 06	EX8	DGZ		FUSE 70 AMP in PDC
		99	2, 6	L	11, 12, 14, 15, 16	EX8	DGZ		70 AMP in PDC
		99	2, 6	L	51, 52, 54, 55, 56	EX8	DGZ		70 AMP in PDC
		99	3, 7	L	02, 06	EX8	DGZ		70 AMP in PDC
		99	3, 7	L	12, 15, 16	EX8	DGZ		70 AMP in PDC
24	5126 094AA	1	2, 6	L	01, 02, 06	EX8	DGZ		FUSE, Maxi, 60 AMP, Blue
		1	2, 6	L	11, 12, 14, 15, 16	EX8	DGZ		
		1	2, 6	L	51, 52, 54, 55, 56	EX8	DGZ		
		1	3, 7	L	02, 06	EX8	DGZ		
		1	3, 7	L	12, 15, 16	EX8	DGZ		
25	5133 472AA	99	2, 6	L	01, 02, 06	EX8	DGZ		FUSE, Standard, 30 AMP, Green

Refer to Model Legend Information Bookmark

Under Seat - Relays & Fuses
Figure 008-505

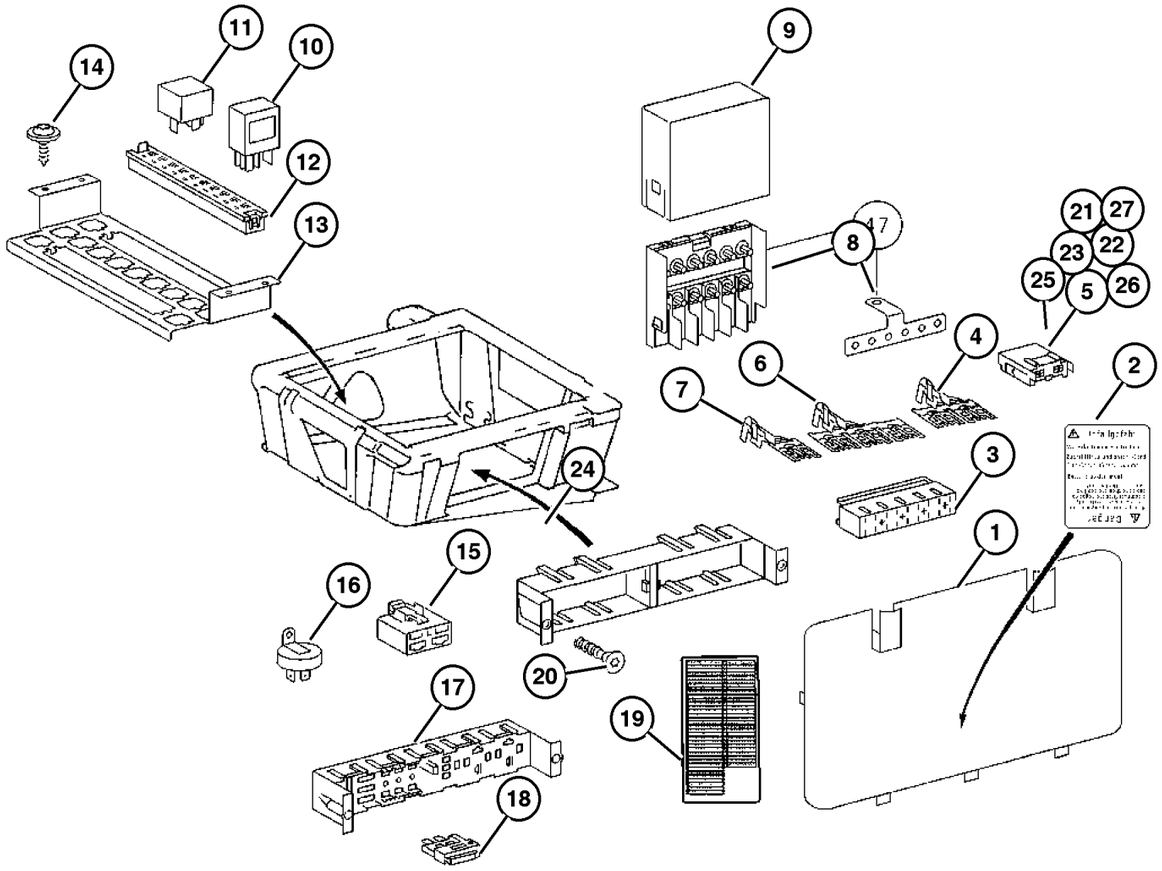

ITEM	PART NUMBER	QTY	LINE	SERIES	BODY	ENGINE	TRANS	TRIM	DESCRIPTION
		99	2, 6	L	11, 12, 14, 15, 16	EX8	DGZ		
		99	2, 6	L	51, 52, 54, 55, 56	EX8	DGZ		
		99	3, 7	L	02, 06	EX8	DGZ		
		99	3, 7	L	12, 15, 16	EX8	DGZ		
26	5133 473AA	99	2, 6	L	01, 02, 06	EX8	DGZ		FUSE, Maxi, 50 AMP, Red
		99	2, 6	L	11, 12, 14, 15, 16	EX8	DGZ		
		99	2, 6	L	51, 52, 54, 55, 56	EX8	DGZ		
		99	3, 7	L	02, 06	EX8	DGZ		
		99	3, 7	L	12, 15, 16	EX8	DGZ		
27	5138 904AA	3	2, 6	L	11, 12, 14, 15, 16	EX8	DGZ		FUSE
		3	2, 6	L	51, 52, 54, 55, 56	EX8	DGZ		
		3	3, 7	L	12, 15, 16	EX8	DGZ		
-28	5120 844AA-	1	2, 6	L	01, 02, 06	EX8	DGZ		BRACKET, Fuse Block
		1	2, 6	L	11, 12, 14, 15, 16	EX8	DGZ		
		1	2, 6	L	51, 52, 54, 55, 56	EX8	DGZ		
		1	3, 7	L	02, 06	EX8	DGZ		
		1	3, 7	L	12, 15, 16	EX8	DGZ		
-29	5104 599AA-	99	2, 6	L	01, 02, 06	EX8	DGZ		FUSE 100 AMP

Refer to Model Legend Information Bookmark

Under Seat - Relays & Fuses
Figure 008-505

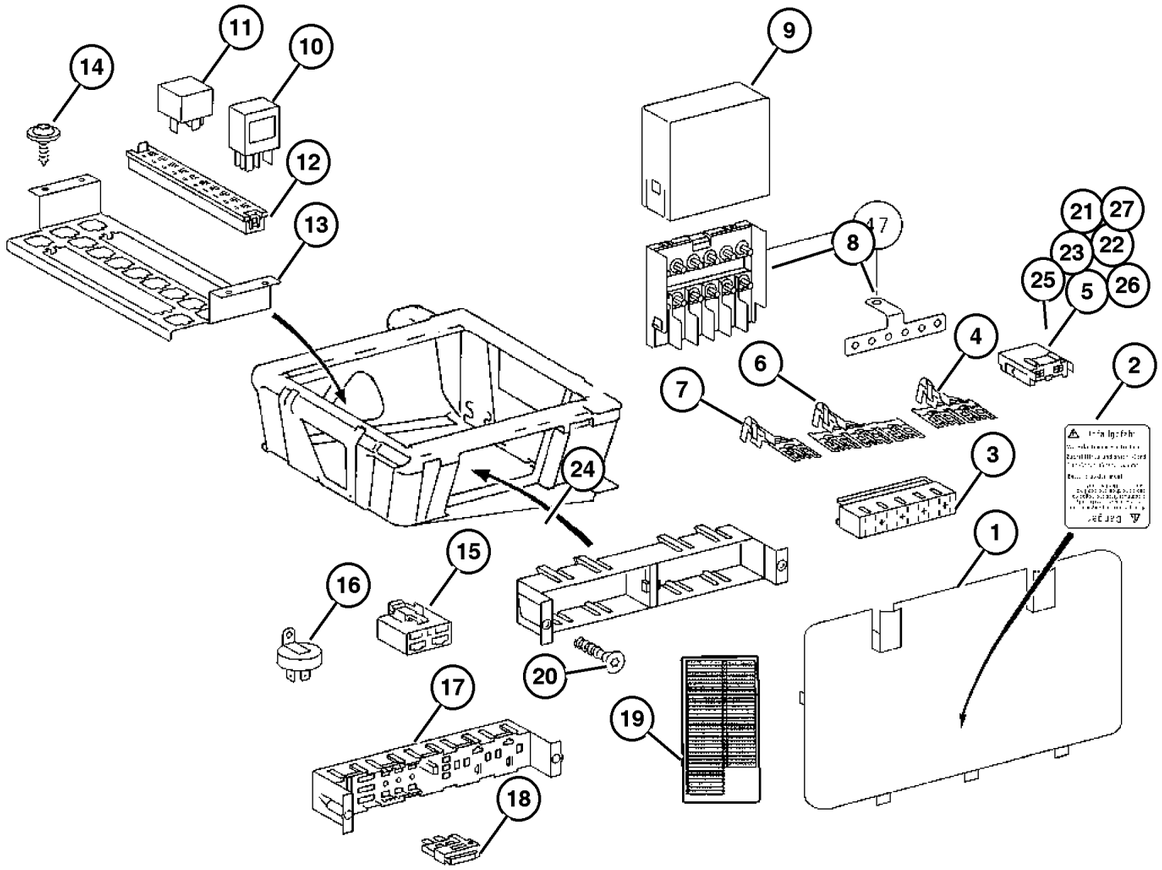

ITEM	PART NUMBER	QTY	LINE	SERIES	BODY	ENGINE	TRANS	TRIM	DESCRIPTION
		99	2, 6	L	11, 12, 14, 15, 16	EX8	DGZ		100 AMP
		99	2, 6	L	51, 52, 54, 55, 56	EX8	DGZ		100 AMP
		99	3, 7	L	02, 06	EX8	DGZ		100 AMP
		99	3, 7	L	12, 15, 16	EX8	DGZ		100 AMP

Refer to Model Legend Information Bookmark

AR = Use as required - = Non illustrated part # = New this model year

March 3, 2006

« RETURN TO GROUP INDEX

Instrument Panel - Relays & Fuses
Figure 008-510

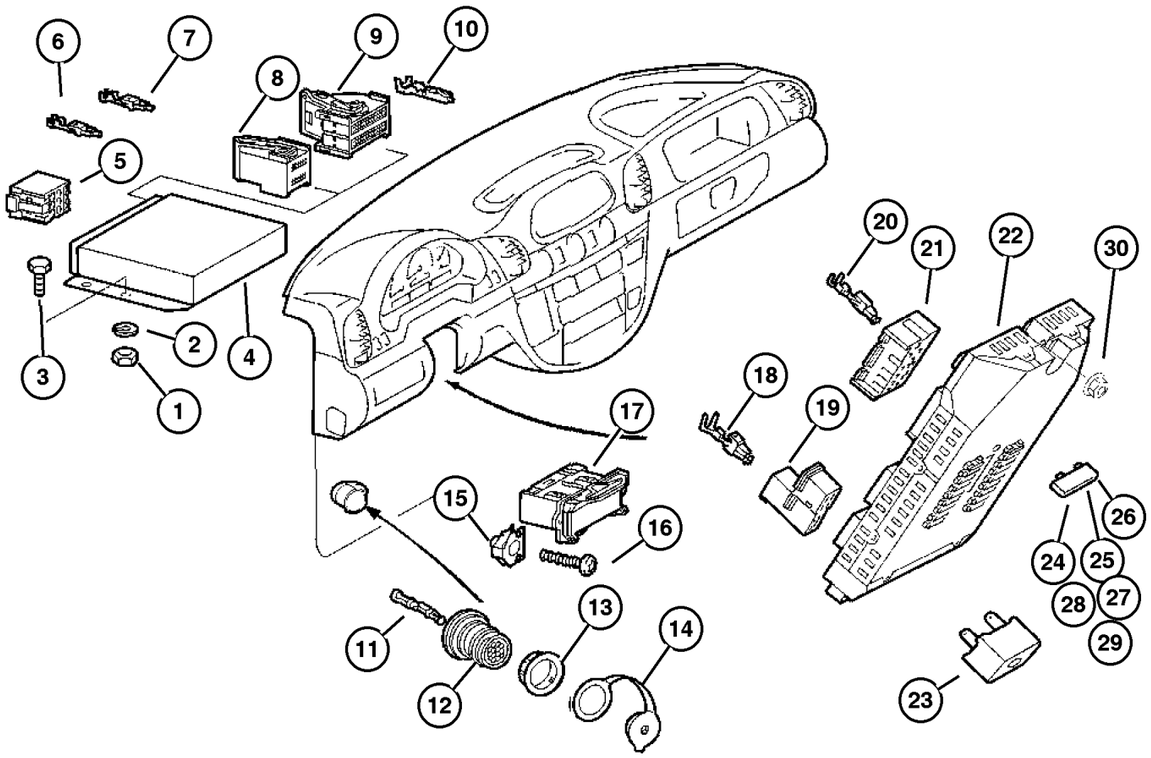

ITEM	PART NUMBER	QTY	LINE	SERIES	BODY	ENGINE	TRANS	TRIM	DESCRIPTION
1									BOLT, M6x20
	5126 198AA	9	2, 6	L	11, 12, 14, 15, 16	EX8	DGZ		
		4	2, 6	L	01, 02, 06	EX8	DGZ		
		4	2, 6	L	51, 52, 54, 55, 56	EX8	DGZ		
		4	3, 7	L	02, 06	EX8	DGZ		
		4	3, 7	L	12, 15, 16	EX8	DGZ		
2									NUT, Hex, (NOT SERVICED) (Not Serviced)
3									LOCK WASHER
	5126 240AA	1	2, 6	L	01, 02, 06	EX8	DGZ		
		1	2, 6	L	11, 12, 14, 15, 16	EX8	DGZ		
		1	2, 6	L	51, 52, 54, 55, 56	EX8	DGZ		
		4	3, 7	L	02, 06	EX8	DGZ		
		4	3, 7	L	12, 15, 16	EX8	DGZ		
4									MODULE, Powertrain Control
	5166 760AA	1	2, 6	L	01, 02, 06	EX8	DGZ		
		1	2, 6	L	11, 12, 14, 15, 16	EX8	DGZ		
		1	2, 6	L	51, 52, 54, 55, 56	EX8	DGZ		
		1	3, 7	L	02, 06	EX8	DGZ		
		1	3, 7	L	12, 15, 16	EX8	DGZ		
5									CONNECTOR
	5120 752AA	1	2, 6	L	01, 02, 06	EX8	DGZ		
		1	2, 6	L	11, 12, 14, 15, 16	EX8	DGZ		

Refer to Model Legend Information Bookmark

AR = Use as required - = Non illustrated part # = New this model year

March 3, 2006

« RETURN TO GROUP INDEX

»

Instrument Panel - Relays & Fuses
Figure 008-510

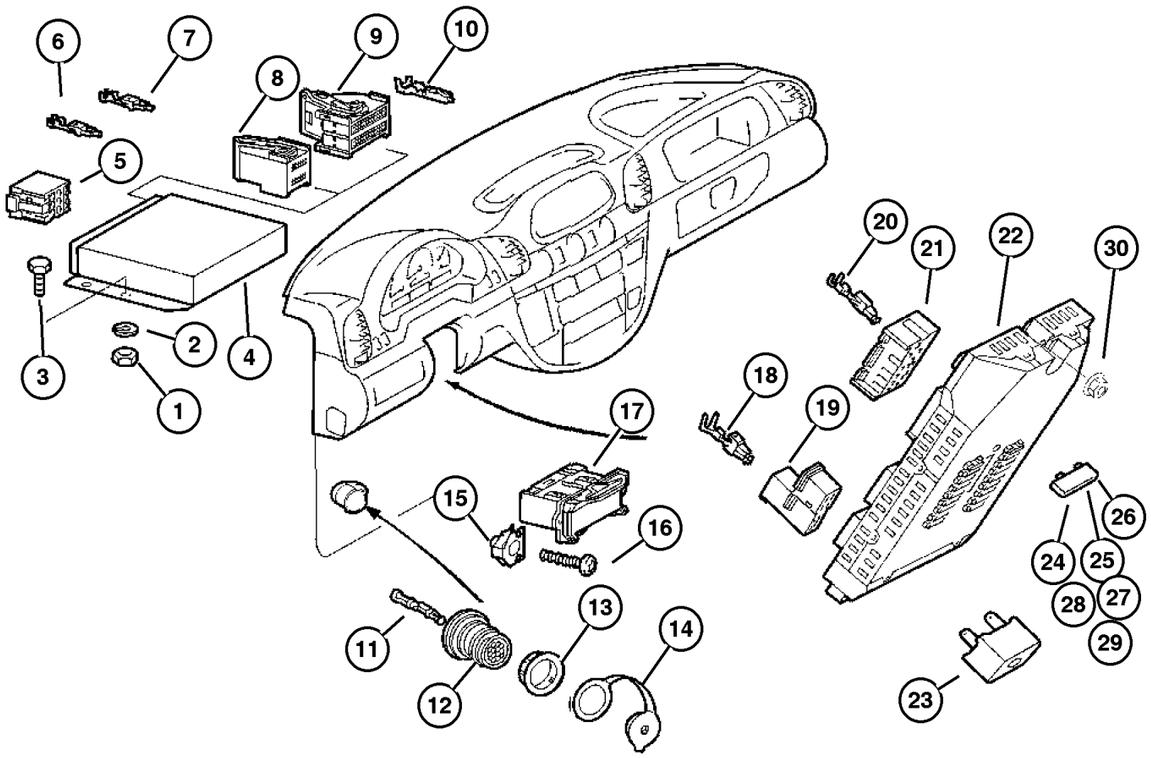

ITEM	PART NUMBER	QTY	LINE	SERIES	BODY	ENGINE	TRANS	TRIM	DESCRIPTION
		1	2, 6	L	51, 52, 54, 55, 56	EX8	DGZ		
		1	3, 7	L	02, 06	EX8	DGZ		
		1	3, 7	L	12, 15, 16	EX8	DGZ		
6	5133 372AA	1	2, 6	L	01, 02, 06	EX8	DGZ		TERMINAL
		1	2, 6	L	11, 12, 14, 15, 16	EX8	DGZ		
		1	2, 6	L	51, 52, 54, 55, 56	EX8	DGZ		
		1	3, 7	L	02, 06	EX8	DGZ		
		1	3, 7	L	12, 15, 16	EX8	DGZ		
7	5103 882AA	1	2, 6	L	01, 02, 06	EX8	DGZ		TERMINAL
		1	2, 6	L	11, 12, 14, 15, 16	EX8	DGZ		
		1	2, 6	L	51, 52, 54, 55, 56	EX8	DGZ		
		1	3, 7	L	02, 06	EX8	DGZ		
		1	3, 7	L	12, 15, 16	EX8	DGZ		
8	5120 753AA	1	2, 6	L	11, 12, 14, 15, 16	EX8	DGZ		CONNECTOR
		1	2, 6	L	51, 52, 54, 55, 56	EX8	DGZ		
		1	3, 7	L	02, 06	EX8	DGZ		
		1	3, 7	L	12, 15, 16	EX8	DGZ		
9	5120 754AA	1	2, 6	L	01, 02, 06	EX8	DGZ		CONNECTOR

Refer to Model Legend Information Bookmark

AR = Use as required - = Non illustrated part # = New this model year

March 3, 2006

Instrument Panel - Relays & Fuses
Figure 008-510

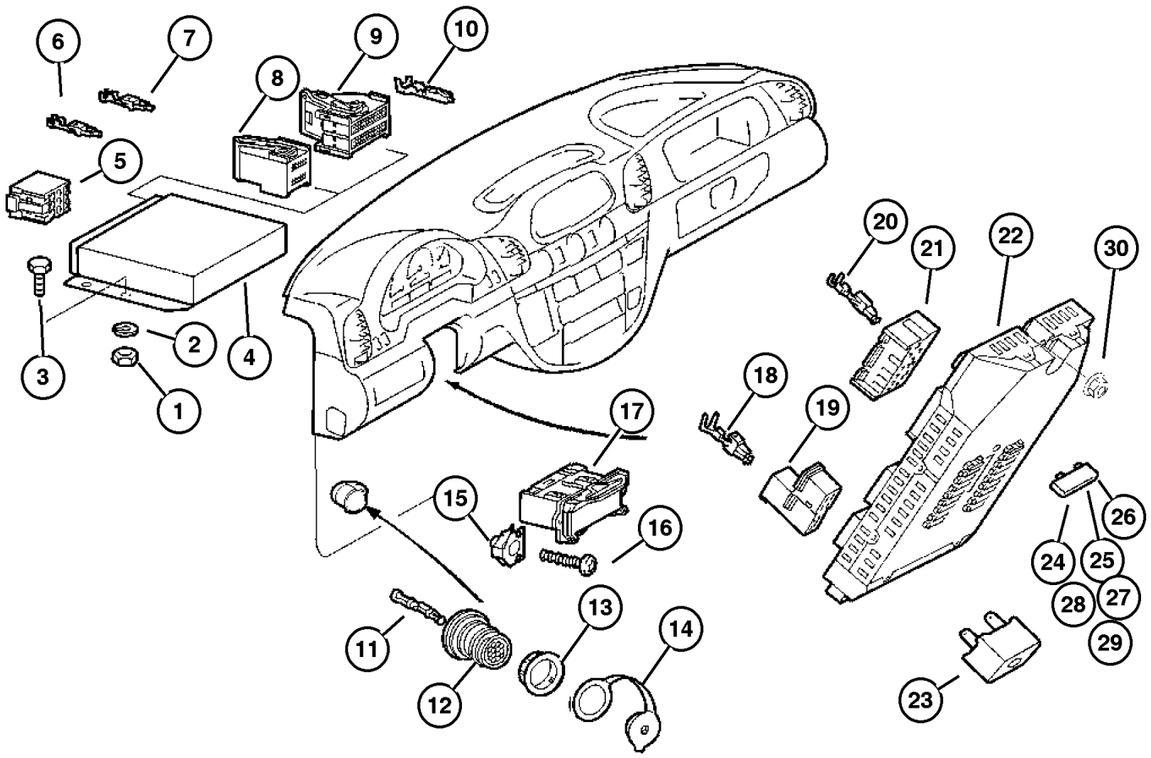

ITEM	PART NUMBER	QTY	LINE	SERIES	BODY	ENGINE	TRANS	TRIM	DESCRIPTION
		1	2, 6	L	11, 12, 14, 15, 16	EX8	DGZ		
		1	2, 6	L	51, 52, 54, 55, 56	EX8	DGZ		
		1	3, 7	L	02, 06	EX8	DGZ		
		1	3, 7	L	12, 15, 16	EX8	DGZ		
10									TERMINAL
	5103 874AA	99	2, 6	L	01, 02, 06	EX8	DGZ		
		99	2, 6	L	11, 12, 14, 15, 16	EX8	DGZ		
		99	2, 6	L	51, 52, 54, 55, 56	EX8	DGZ		
		99	3, 7	L	02, 06	EX8	DGZ		
		99	3, 7	L	12, 15, 16	EX8	DGZ		
11									TERMINAL
	5133 383AB	1	2, 6	L	01, 02, 06				
		1	2, 6	L	11, 12, 14, 15, 16				
		1	2, 6	L	51, 52, 54, 55, 56				
		1	3, 7	L	12, 15, 16				
12									CONNECTOR
	5120 544AA	1	2, 6	L	01, 02, 06	EX8	DGZ		
		1	2, 6	L	11, 12, 14, 15, 16	EX8	DGZ		
		1	2, 6	L	51, 52, 54, 55, 56	EX8	DGZ		
		1	3, 7	L	02, 06	EX8	DGZ		
		1	3, 7	L	12, 15, 16	EX8	DGZ		
13									STRAP, Ground

Refer to Model Legend Information Bookmark

AR = Use as required - = Non illustrated part # = New this model year

March 3, 2006

« RETURN TO GROUP INDEX

« »

Instrument Panel - Relays & Fuses
Figure 008-510

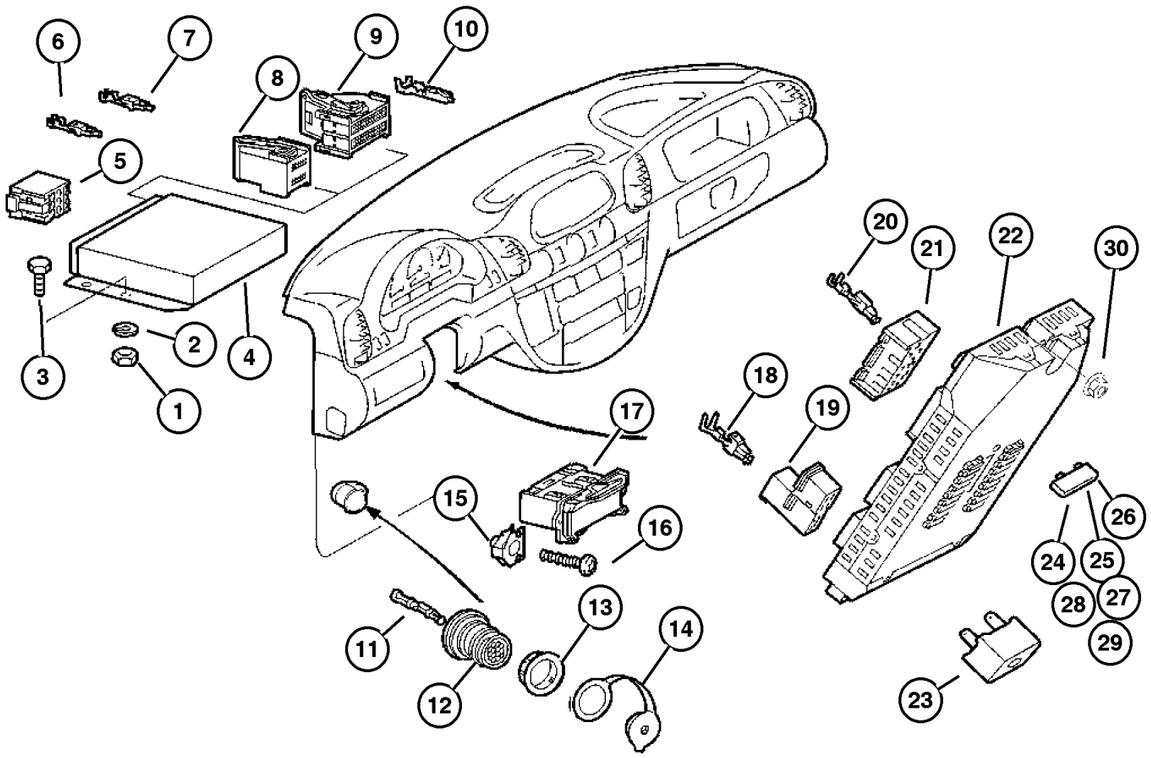

ITEM	PART NUMBER	QTY	LINE	SERIES	BODY	ENGINE	TRANS	TRIM	DESCRIPTION
	5120 226AA	1	2, 6	L	01, 02, 06	EX8	DGZ		
		1	2, 6	L	11, 12, 14, 15, 16	EX8	DGZ		
		1	2, 6	L	51, 52, 54, 55, 56	EX8	DGZ		
		1	3, 7	L	02, 06	EX8	DGZ		
		1	3, 7	L	12, 15, 16	EX8	DGZ		
14	5103 747AA	1	2, 6	L	01, 02, 06				PLUG, Wiring
		1	2, 6	L	11, 12, 14, 15, 16				
		1	2, 6	L	51, 52, 54, 55, 56				
		1	3, 7	L	02, 06				
		1	3, 7	L	12, 15, 16				
15	5125 861AA	2	2, 6	L	01, 02, 06	EX8	DGZ		NUT, Spring
		2	2, 6	L	11, 12, 14, 15, 16	EX8	DGZ		
		2	2, 6	L	51, 52, 54, 55, 56	EX8	DGZ		
		2	3, 7	L	12, 15, 16	EX8	DGZ		
		1	3, 7	L	02, 06	EX8	DGZ		
16	6104 496AA	2	2, 6	L	01, 02, 06	EX8	DGZ		SCREW
		2	2, 6	L	11, 12, 14, 15, 16	EX8	DGZ		
		2	2, 6	L	51, 52, 54, 55, 56	EX8	DGZ		
		2	3, 7	L	02, 06	EX8	DGZ		

Refer to Model Legend Information Bookmark

AR = Use as required - = Non illustrated part # = New this model year

March 3, 2006

« RETURN TO GROUP INDEX

Instrument Panel - Relays & Fuses
Figure 008-510

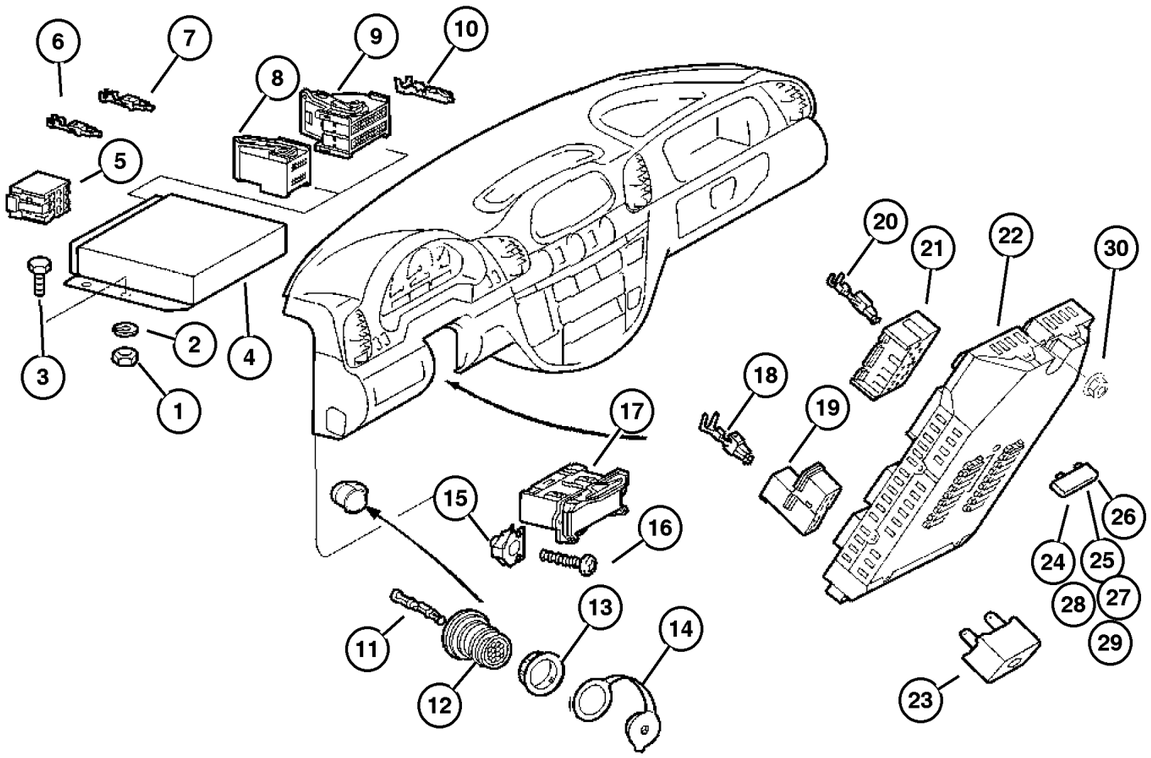

ITEM	PART NUMBER	QTY	LINE	SERIES	BODY	ENGINE	TRANS	TRIM	DESCRIPTION
		2	3, 7	L	12, 15, 16	EX8	DGZ		
17									BRACKET, Diagnostic Module
	5098 297AA	1	2, 6	L	01, 02, 06	EX8	DGZ		
		1	2, 6	L	11, 12, 14, 15, 16	EX8	DGZ		
		1	2, 6	L	51, 52, 54, 55, 56	EX8	DGZ		
		1	3, 7	L	02, 06	EX8	DGZ		
		1	3, 7	L	12, 15, 16	EX8	DGZ		
18									TERMINAL
	5133 372AA	1	2, 6	L	01, 02, 06	EX8	DGZ		
		1	2, 6	L	11, 12, 14, 15, 16	EX8	DGZ		
		1	2, 6	L	51, 52, 54, 55, 56	EX8	DGZ		
		1	3, 7	L	12, 15, 16	EX8	DGZ		
		99	3, 7	L	02, 06	EX8	DGZ		
19									CONNECTOR
	5120 555AA	1	2, 6	L	01, 02, 06	EX8	DGZ		
		1	2, 6	L	11, 12, 14, 15, 16	EX8	DGZ		
		1	2, 6	L	51, 52, 54, 55, 56	EX8	DGZ		
		1	3, 7	L	02, 06	EX8	DGZ		
		1	3, 7	L	12, 15, 16	EX8	DGZ		
20									TERMINAL
	5103 893AA	99	2, 6	L	01, 02, 06	EX8	DGZ		
		99	2, 6	L	11, 12, 14, 15, 16	EX8	DGZ		

Refer to Model Legend Information Bookmark

Instrument Panel - Relays & Fuses
Figure 008-510

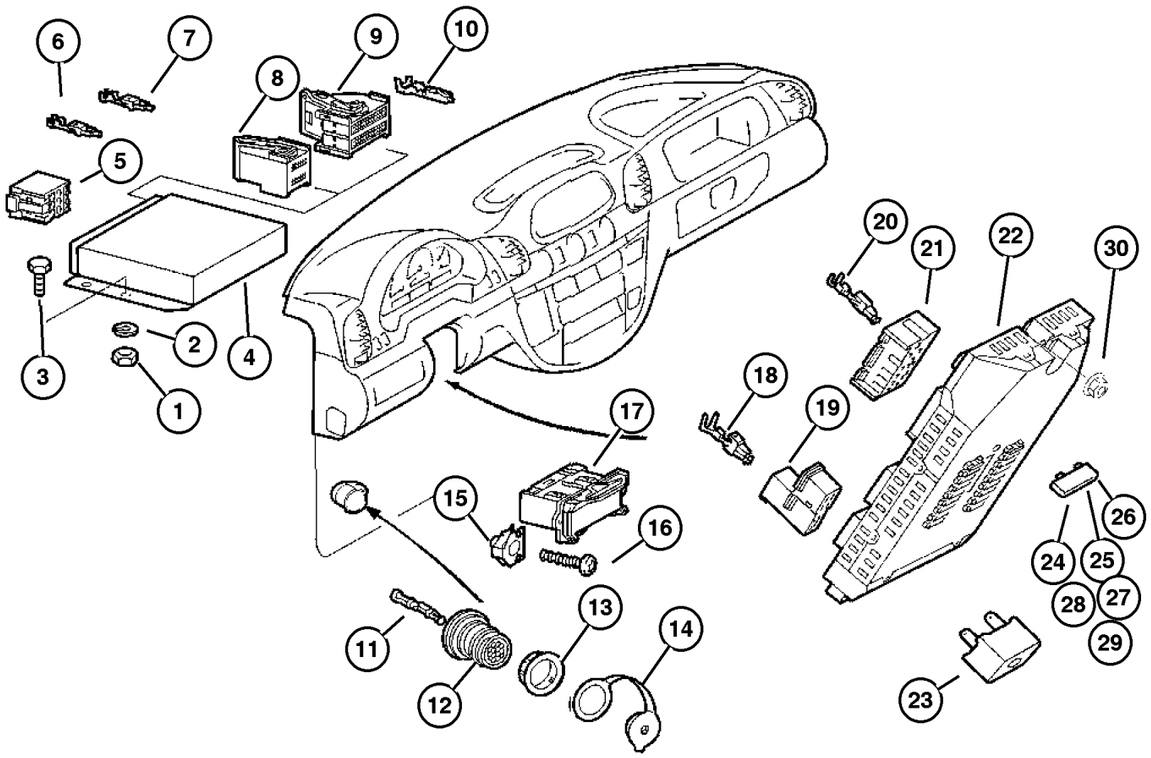

ITEM	PART NUMBER	QTY	LINE	SERIES	BODY	ENGINE	TRANS	TRIM	DESCRIPTION
		99	2, 6	L	51, 52, 54, 55, 56	EX8	DGZ		
		99	3, 7	L	02, 06	EX8	DGZ		
		99	3, 7	L	12, 15, 16	EX8	DGZ		
21	5120 646AA	1	2, 6	L	01, 02, 06	EX8	DGZ		CONNECTOR
		1	2, 6	L	11, 12, 14, 15, 16	EX8	DGZ		
		1	2, 6	L	51, 52, 54, 55, 56	EX8	DGZ		
		1	3, 7	L	02, 06	EX8	DGZ		
		1	3, 7	L	12, 15, 16	EX8	DGZ		
22	5120 244AA	1	2, 6	L	01, 02, 06	EX8	DGZ		BLOCK, Fuse
		1	2, 6	L	11, 12, 14, 15, 16	EX8	DGZ		
		1	2, 6	L	51, 52, 54, 55, 56	EX8	DGZ		
		1	3, 7	L	02, 06	EX8	DGZ		
		1	3, 7	L	12, 15, 16	EX8	DGZ		
23	5103 746AA	1	2, 6	L	11, 12, 14, 15, 16				RELAY
		1	2, 6	L	51, 52, 54, 55, 56				
		1	3, 7	L	12, 15, 16				
24	5104 643AA	99	2, 6	L	01, 02, 06	EX8	DGZ		FUSE, Standard, 10 AMP, Red
		99	2, 6	L	11, 12, 14, 15, 16	EX8	DGZ		

Refer to Model Legend Information Bookmark

AR = Use as required - = Non illustrated part # = New this model year

March 3, 2006

« RETURN TO GROUP INDEX

Instrument Panel - Relays & Fuses
Figure 008-510

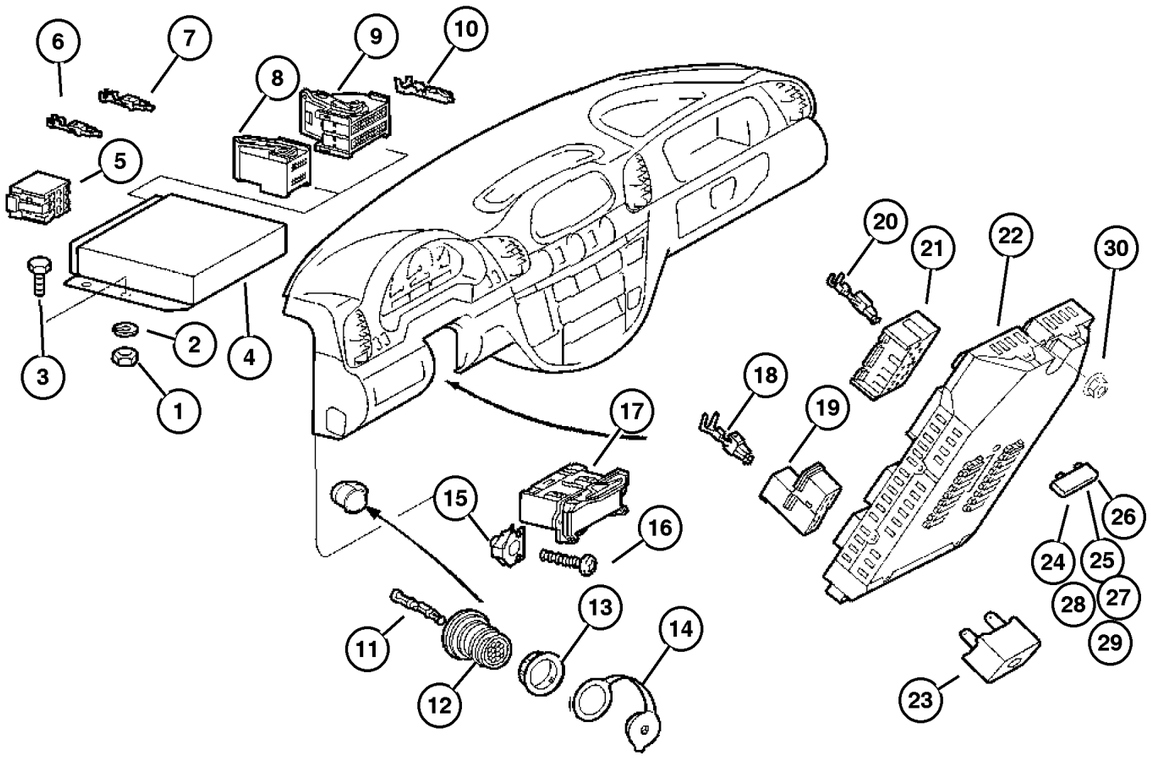

ITEM	PART NUMBER	QTY	LINE	SERIES	BODY	ENGINE	TRANS	TRIM	DESCRIPTION
		99	2, 6	L	51, 52, 54, 55, 56	EX8	DGZ		
		99	3, 7	L	02, 06	EX8	DGZ		
		99	3, 7	L	12, 15, 16	EX8	DGZ		
25									FUSE
	5104 604AA	1	2, 6	L	01, 02, 06	EX8	DGZ		20 AMP
		1	2, 6	L	11, 12, 14, 15, 16	EX8	DGZ		20 AMP
		1	2, 6	L	51, 52, 54, 55, 56	EX8	DGZ		20 AMP
		1	3, 7	L	02, 06	EX8	DGZ		20 AMP
		1	3, 7	L	12, 15, 16	EX8	DGZ		20 AMP
26									FUSE
	5104 605AA	1	2, 6	L	01, 02, 06	EX8	DGZ		30 AMP
		1	2, 6	L	11, 12, 14, 15, 16	EX8	DGZ		30 AMP
		1	2, 6	L	51, 52, 54, 55, 56	EX8	DGZ		30 AMP
		1	3, 7	L	02, 06	EX8	DGZ		30 AMP
		1	3, 7	L	12, 15, 16	EX8	DGZ		30 AMP
	5104 644AA	99	2, 6	L	01, 02, 06	EX8	DGZ		25 AMP
		99	2, 6	L	11, 12, 14, 15, 16	EX8	DGZ		25 AMP
		99	2, 6	L	51, 52, 54, 55, 56	EX8	DGZ		25 AMP
		99	3, 7	L	02, 06	EX8	DGZ		25 AMP
		99	3, 7	L	12, 15, 16	EX8	DGZ		25 AMP
27									FUSE, Standard, 15 AMP, Light Blue
	5101 467AA	99	2, 6	L	01, 02, 06	EX8	DGZ		

Refer to Model Legend Information Bookmark

AR = Use as required - = Non illustrated part # = New this model year

March 3, 2006

« RETURN TO GROUP INDEX

« »

Instrument Panel - Relays & Fuses
Figure 008-510

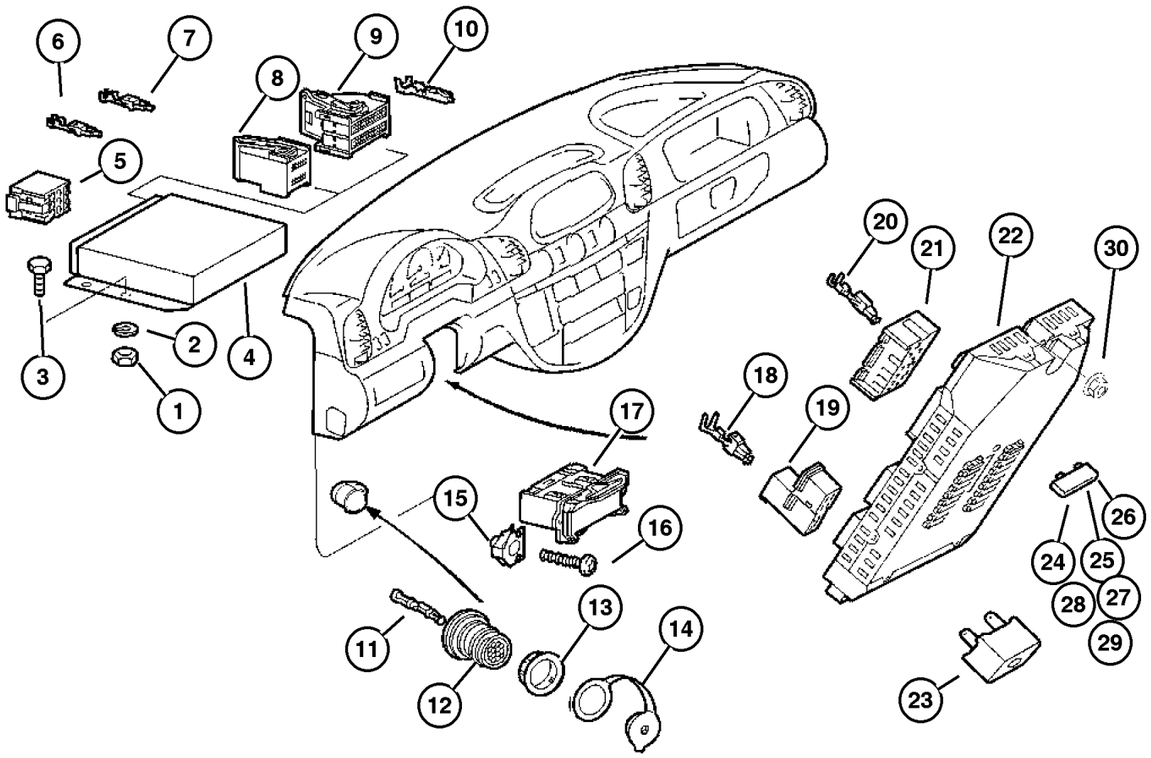

ITEM	PART NUMBER	QTY	LINE	SERIES	BODY	ENGINE	TRANS	TRIM	DESCRIPTION
		99	2, 6	L	11, 12, 14, 15, 16	EX8	DGZ		
		99	2, 6	L	51, 52, 54, 55, 56	EX8	DGZ		
		99	3, 7	L	02, 06	EX8	DGZ		
		99	3, 7	L	12, 15, 16	EX8	DGZ		
28	5103 799AA	99	2, 6	L	01, 02, 06	EX8	DGZ		FUSE, Blade Type, 7.5 AMP
		99	2, 6	L	11, 12, 14, 15, 16	EX8	DGZ		
		99	2, 6	L	51, 52, 54, 55, 56	EX8	DGZ		
		99	3, 7	L	02, 06	EX8	DGZ		
		99	3, 7	L	12, 15, 16	EX8	DGZ		
29	5138 903AA	1	2, 6	L	11, 12, 14, 15, 16	EX8	DGZ		FUSE, Standard, 7.5 AMP, Brown
		1	2, 6	L	51, 52, 54, 55, 56	EX8	DGZ		
		1	3, 7	L	12, 15, 16	EX8	DGZ		
30	5097 674AA	4	2, 6	L	11, 12, 14, 15, 16	EX8	DGZ		NUT, Hex
		4	2, 6	L	51, 52, 54, 55, 56	EX8	DGZ		
		2	2, 6	L	01, 02, 06	EX8	DGZ		
		4	3, 7	L	12, 15, 16	EX8	DGZ		
		2	3, 7	L	02, 06	EX8	DGZ		

Refer to Model Legend Information Bookmark

AR = Use as required - = Non illustrated part # = New this model year

March 3, 2006

« RETURN TO GROUP INDEX

Sensors Engine
Figure 008-605

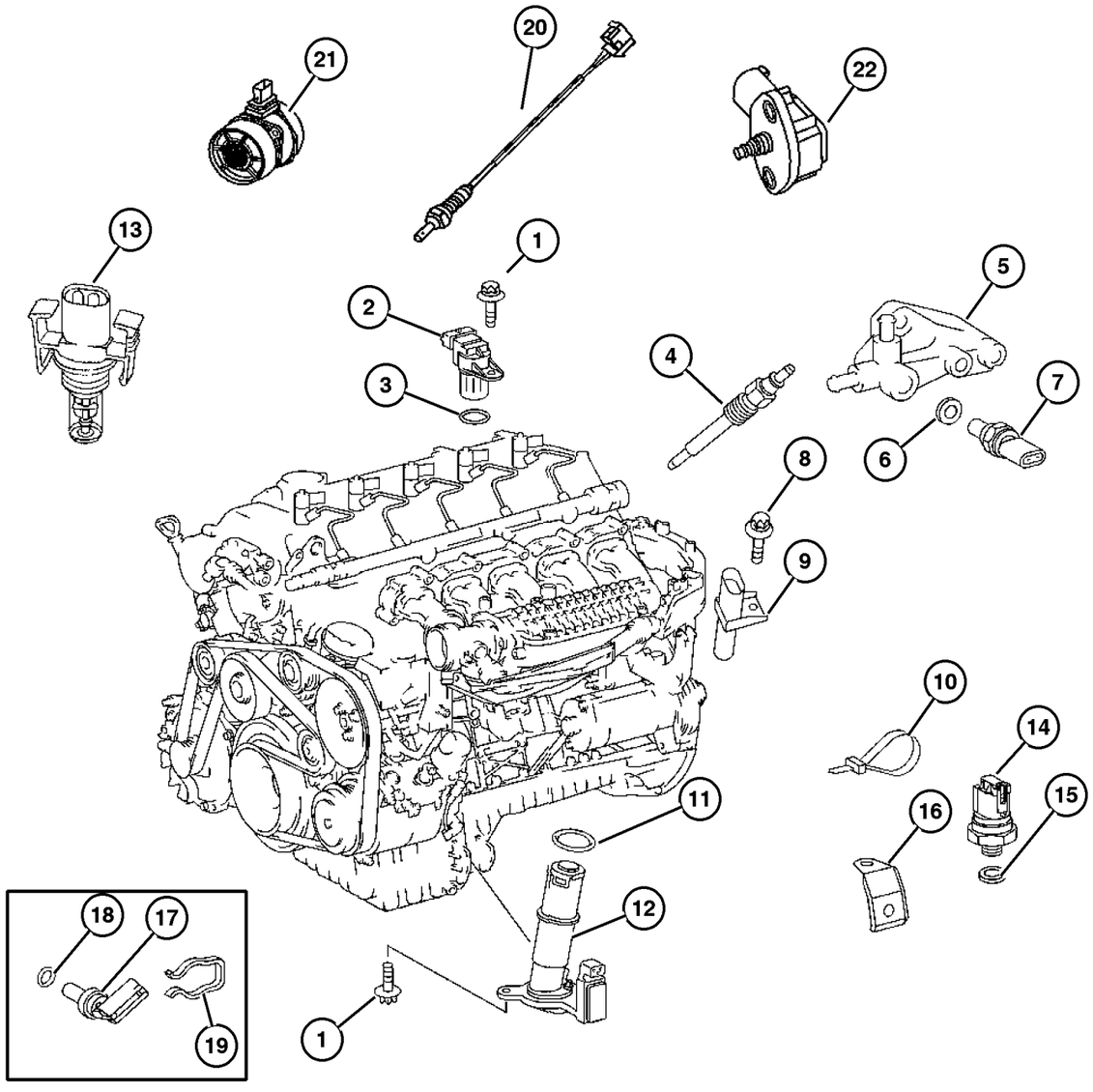

ITEM	PART NUMBER	QTY	LINE	SERIES	BODY	ENGINE	TRANS	TRIM	DESCRIPTION
1	6104 682AA	3	2, 3, 6, 7	L		EX8	DGZ		SCREW
2	5175 762AA	1	2, 3, 6, 7	L		EX8	DGZ		SENSOR, Camshaft
3	5183 535AA	1	2, 3, 6, 7	L		EX8	DGZ		O RING
4	5117 592AA	5	2, 3, 6, 7	L		EX8	DGZ		PLUG, Glow
5									BRACKET, (NOT REQUIRED)
6									WASHER, Banjo
	6507 454AA	4	2, 6	L	01, 02, 06	EX8	DGZ		
		4	2, 6	L	11, 12, 14, 15, 16	EX8	DGZ		
		4	2, 6	L	51, 52, 54, 55, 56	EX8	DGZ		
		4	3, 7	L	02, 06	EX8	DGZ		
		4	3, 7	L	12, 15, 16	EX8	DGZ		
7	5103 534AB	1	2, 3, 6, 7	L		EX8	DGZ		SENDING UNIT, Temperature Gauge
8									SCREW
	6104 076AA	1	2, 6	L	01, 02, 06	EX8	DGZ		
		1	2, 6	L	11, 12, 14, 15, 16	EX8	DGZ		
		1	2, 6	L	51, 52, 54, 55, 56	EX8	DGZ		
		1	3, 7	L	02, 06	EX8	DGZ		
		1	3, 7	L	12, 15, 16	EX8	DGZ		
9	5080 350AA	1	2, 3, 6, 7	L		EX8	DGZ		SENSOR, Crankshaft
10									STRAP, Tie
	5080 475AB	1	2, 6	L	01, 02, 06	EX8	DGZ		
		1	2, 6	L	11, 12, 14, 15, 16	EX8	DGZ		
		1	2, 6	L	51, 52, 54, 55, 56	EX8	DGZ		
		1	3, 7	L	02, 06	EX8	DGZ		
		1	3, 7	L	12, 15, 16	EX8	DGZ		
11	5103 567AA	1	2, 3, 6, 7	L		EX8	DGZ		SEAL RING

Refer to Model Legend Information Bookmark

AR = Use as required - = Non illustrated part # = New this model year

March 3, 2006

« RETURN TO GROUP INDEX

»

Sensors Engine
Figure 008-605

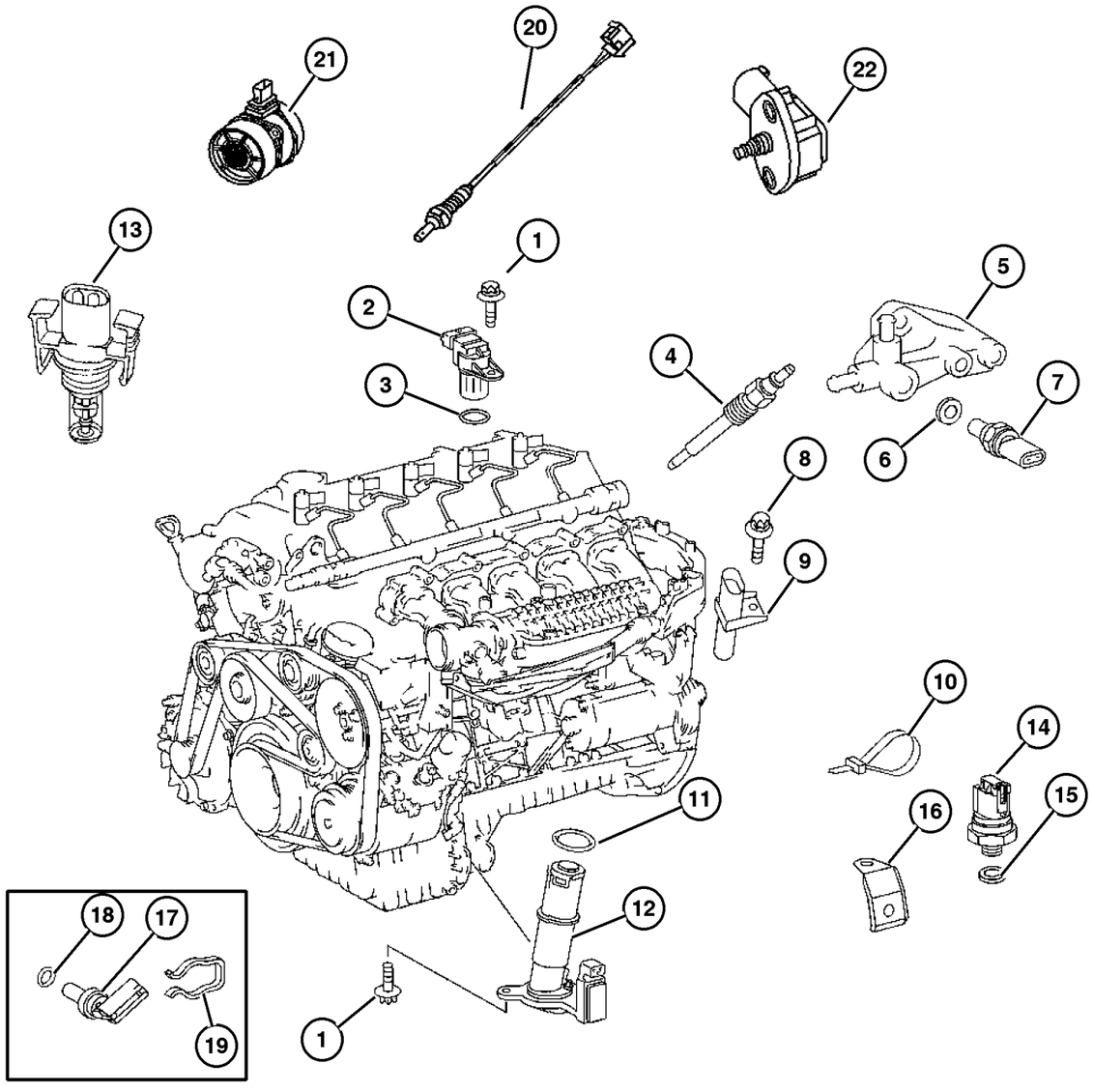

ITEM	PART NUMBER	QTY	LINE	SERIES	BODY	ENGINE	TRANS	TRIM	DESCRIPTION
12	5117 544AA	1	2, 3, 6, 7	L		EX8	DGZ		SENDING UNIT, Oil Pressure, Oil level, temperature and quality
13									SENSOR, Temperature
	5174 042AA	1	2, 6	L	01, 02, 06	EX8	DGZ		
		1	2, 6	L	11, 12, 14, 15, 16	EX8	DGZ		
		1	2, 6	L	51, 52, 54, 55, 56	EX8	DGZ		
		1	3, 7	L	02, 06	EX8	DGZ		
		1	3, 7	L	12, 15, 16	EX8	DGZ		
14	5189 422AA	1	2, 3, 6, 7	L		EX8	DGZ		SENDING UNIT, Oil Pressure
15									WASHER
	5104 639AA	99	2, 6	L	11, 12, 14, 15, 16	EX8	DGZ		
		99	2, 6	L	51, 52, 54, 55, 56	EX8	DGZ		
		16	3, 7	L	12, 15, 16	EX8	DGZ		
16	5096 466AA	1	2, 3, 6, 7	L		EX8	DGZ		BRACKET, Wiring
17	5080 147AA	1	2, 3, 6, 7	L		EX8	DGZ		SENDING UNIT, Temperature Gauge
18	5080 148AA	1	2, 3, 6, 7	L		EX8	DGZ		O RING
19	5080 149AA	1	2, 3, 6, 7	L		EX8	DGZ		CLIP
20									SENSOR, Oxygen
	5135 667AA	1	2, 6	L	01, 02, 06	EX8	DGZ		
		1	2, 6	L	11, 12, 14, 15, 16	EX8	DGZ		
		1	2, 6	L	51, 52, 54, 55, 56	EX8	DGZ		
		1	3, 7	L	02, 06	EX8	DGZ		
		1	3, 7	L	12, 15, 16	EX8	DGZ		
21									SENSOR, Mass Airflow
	5117 501AA	1	2, 6	L	01, 02, 06	EX8	DGZ		

Refer to Model Legend Information Bookmark

Sensors Engine
Figure 008-605

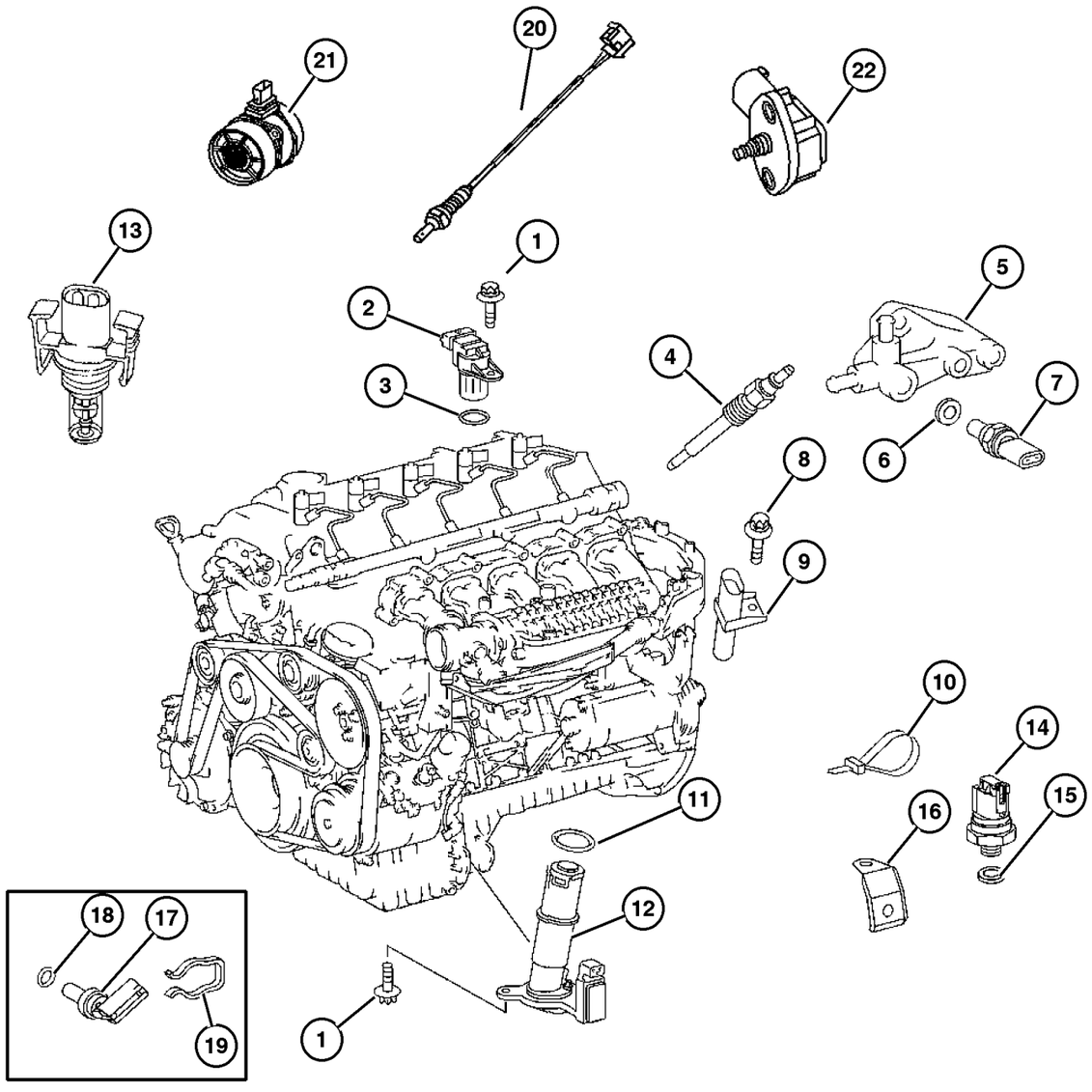

ITEM	PART NUMBER	QTY	LINE	SERIES	BODY	ENGINE	TRANS	TRIM	DESCRIPTION
		1	2, 6	L	11, 12, 14, 15, 16	EX8	DGZ		
		1	2, 6	L	51, 52, 54, 55, 56	EX8	DGZ		
		1	3, 7	L	02, 06	EX8	DGZ		
		1	3, 7	L	12, 15, 16	EX8	DGZ		
22									SENSOR, Map
	5117 545AA	1	2, 6	L	01, 02, 06	EX8	DGZ		Stamped A0041538428
		1	2, 6	L	11, 12, 14, 15, 16	EX8	DGZ		Stamped A0041538428
		1	2, 6	L	51, 52, 54, 55, 56	EX8	DGZ		Stamped A0041538428
		1	3, 7	L	02, 06	EX8	DGZ		Stamped A0041538428
		1	3, 7	L	12, 15, 16	EX8	DGZ		Stamped A0041538428
-23	5117 542AA-	1	2, 3, 6, 7	L		EX8	DGZ		SENSOR, Fuel/Water

Refer to Model Legend Information Bookmark

AR = Use as required - = Non illustrated part # = New this model year

March 3, 2006

« RETURN TO GROUP INDEX

Sensors - Drivetrain
Figure 008-610

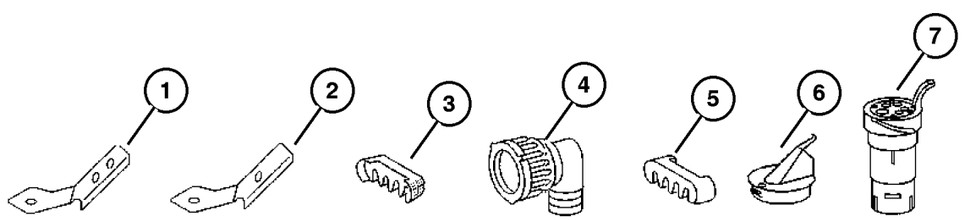

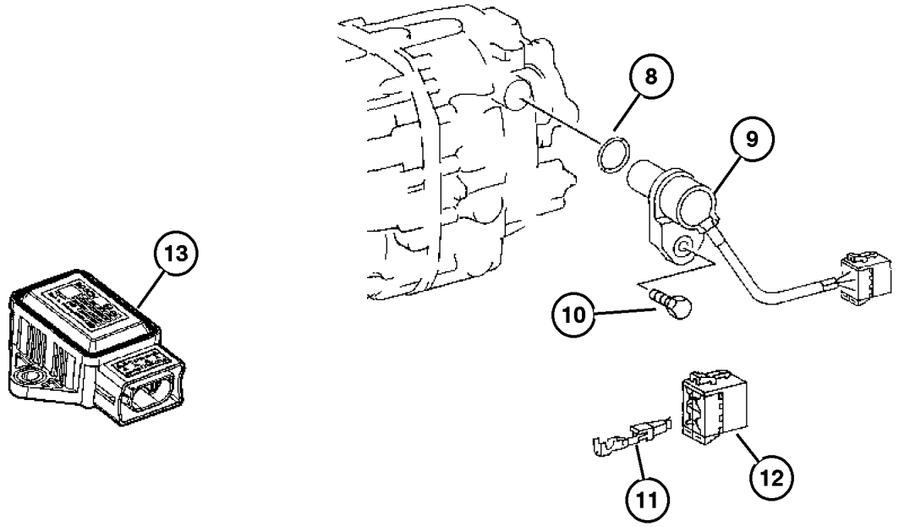

ITEM	PART NUMBER	QTY	LINE	SERIES	BODY	ENGINE	TRANS	TRIM	DESCRIPTION
1									BRACKET
	5120 944AA	1	2, 6	L	01, 02, 06	EX9			
		1	2, 6	L	11, 12, 14, 15, 16	EX9			
		1	2, 6	L	51, 52, 54, 55, 56	EX9			
		1	3, 7	L	02, 06	EX9			
		1	3, 7	L	12, 15, 16	EX9			
2									BRACKET
	5120 947AA	1	2, 6	L	01, 02, 06	EX8	DGZ		
		1	2, 6	L	11, 12, 14, 15, 16	EX8	DGZ		
		1	2, 6	L	51, 52, 54, 55, 56	EX8	DGZ		
		1	3, 7	L	02, 06	EX8	DGZ		
		1	3, 7	L	12, 15, 16	EX8	DGZ		
3									RETAINER, Wiring Harness
	5120 852AA	1	2, 6	L	01, 02, 06	EX8	DGZ		
		1	2, 6	L	11, 12, 14, 15, 16	EX8	DGZ		
		1	2, 6	L	51, 52, 54, 55, 56	EX8	DGZ		
		1	3, 7	L	02, 06	EX8	DGZ		
		1	3, 7	L	12, 15, 16	EX8	DGZ		
4									BOOT, BOOT
	5120 915AA	1	2, 6	L	01, 02, 06	EX8	DGZ		
		1	2, 6	L	11, 12, 14, 15, 16	EX8	DGZ		
		1	2, 6	L	51, 52, 54, 55, 56	EX8	DGZ		

Refer to Model Legend Information Bookmark

AR = Use as required - = Non illustrated part # = New this model year

March 3, 2006

« RETURN TO GROUP INDEX

»

Sensors - Drivetrain
Figure 008-610

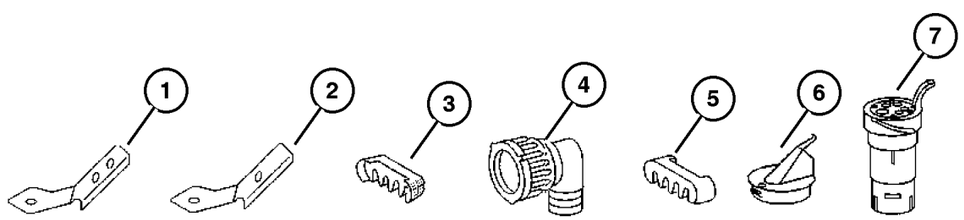

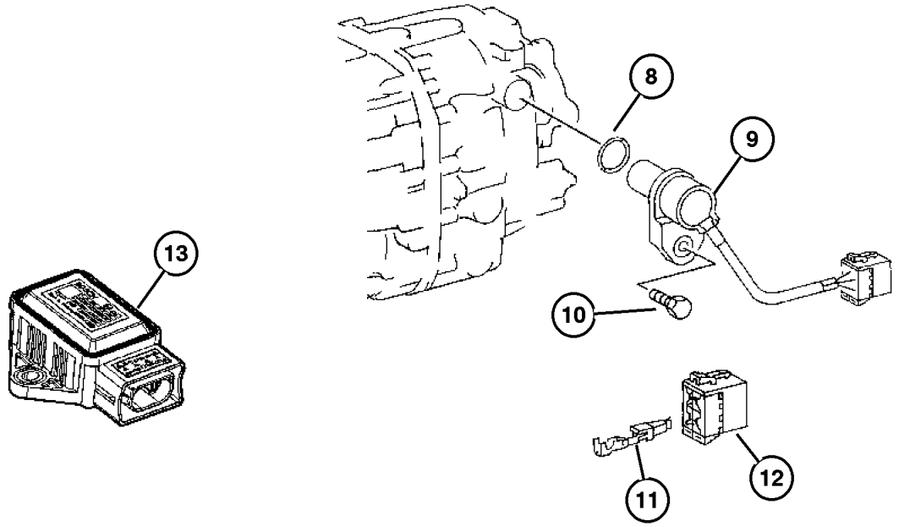

ITEM	PART NUMBER	QTY	LINE	SERIES	BODY	ENGINE	TRANS	TRIM	DESCRIPTION
		1	3, 7	L	02, 06	EX8	DGZ		
		1	3, 7	L	12, 15, 16	EX8	DGZ		
5									RETAINER, Wiring Harness
	5120 883AA	1	2, 6	L	01, 02, 06	EX8	DGZ		
		1	2, 6	L	11, 12, 14, 15, 16	EX8	DGZ		
		1	2, 6	L	51, 52, 54, 55, 56	EX8	DGZ		
		1	3, 7	L	02, 06	EX8	DGZ		
		1	3, 7	L	12, 15, 16	EX8	DGZ		
6									CAP
	5120 884AA	1	2, 6	L	01, 02, 06	EX8	DGZ		
		1	2, 6	L	11, 12, 14, 15, 16	EX8	DGZ		
		1	2, 6	L	51, 52, 54, 55, 56	EX8	DGZ		
		1	3, 7	L	02, 06	EX8	DGZ		
		1	3, 7	L	12, 15, 16	EX8	DGZ		
7									CONNECTOR
	5120 265AA	1	2, 6	L	01, 02, 06	EX8	DGZ		
		1	2, 6	L	11, 12, 14, 15, 16	EX8	DGZ		
		1	2, 6	L	51, 52, 54, 55, 56	EX8	DGZ		
		1	3, 7	L	02, 06	EX8	DGZ		
		1	3, 7	L	12, 15, 16	EX8	DGZ		
8									O RING, Sensor
	5125 908AA	2	2, 6	L	01, 02, 06	EX8	DGZ		
		2	2, 6	L	11, 12, 14, 15, 16	EX8	DGZ		

Refer to Model Legend Information Bookmark

Sensors - Drivetrain
Figure 008-610

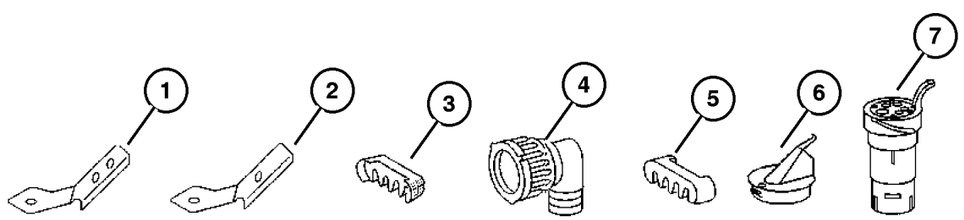

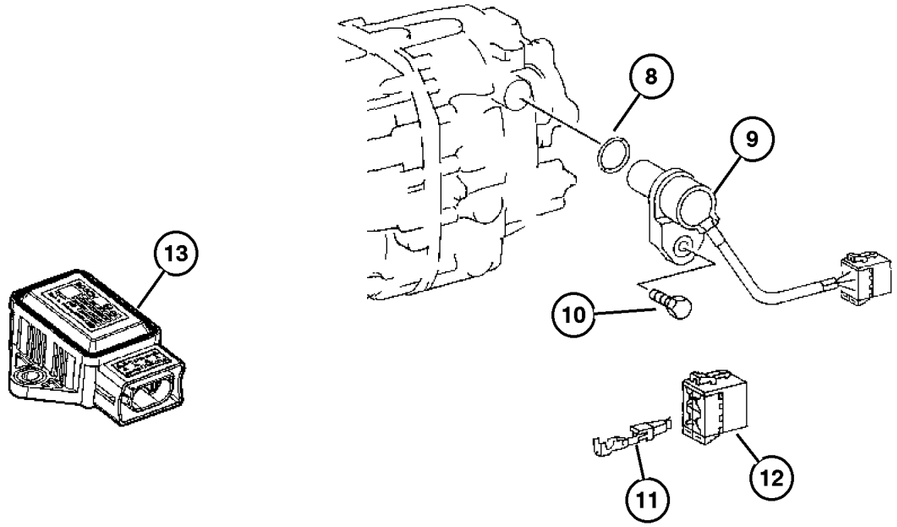

ITEM	PART NUMBER	QTY	LINE	SERIES	BODY	ENGINE	TRANS	TRIM	DESCRIPTION
		2	2, 6	L	51, 52, 54, 55, 56	EX8	DGZ		
		2	3, 7	L	02, 06	EX8	DGZ		
		2	3, 7	L	12, 15, 16	EX8	DGZ		
9									SENSOR, Vehicle Speed
	5120 309AA	1	2, 6	L	01, 02, 06	EX8	DGZ		Tach pulse sensor
		1	2, 6	L	11, 12, 14, 15, 16	EX8	DGZ		Tach pulse sensor
		1	2, 6	L	51, 52, 54, 55, 56	EX8	DGZ		Tach pulse sensor
		1	3, 7	L	02, 06	EX8	DGZ		Tach pulse sensor
		1	3, 7	L	12, 15, 16	EX8	DGZ		Tach pulse sensor
	5120 316AA	1	2, 6	L	01, 02, 06	EX8	DGZ		All wheel drive
		1	2, 6	L	11, 12, 14, 15, 16	EX8	DGZ		All wheel drive
		1	2, 6	L	51, 52, 54, 55, 56	EX8	DGZ		All wheel drive
		1	3, 7	L	02, 06	EX8	DGZ		All wheel drive
		1	3, 7	L	12, 15, 16	EX8	DGZ		All wheel drive
	5120 317AA	1	2, 6	L	01, 02, 06	EX8	DGZ		Auto trans
		1	2, 6	L	11, 12, 14, 15, 16	EX8	DGZ		Auto trans
		1	2, 6	L	51, 52, 54, 55, 56	EX8	DGZ		Auto trans
		1	3, 7	L	02, 06	EX8	DGZ		Auto trans
		1	3, 7	L	12, 15, 16	EX8	DGZ		Auto trans
10									SCREW
	5126 234AA	1	2, 6	L	01, 02, 06	EX8	DGZ		

Refer to Model Legend Information Bookmark

AR = Use as required - = Non illustrated part # = New this model year

March 3, 2006

« RETURN TO GROUP INDEX

Sensors - Drivetrain
Figure 008-610

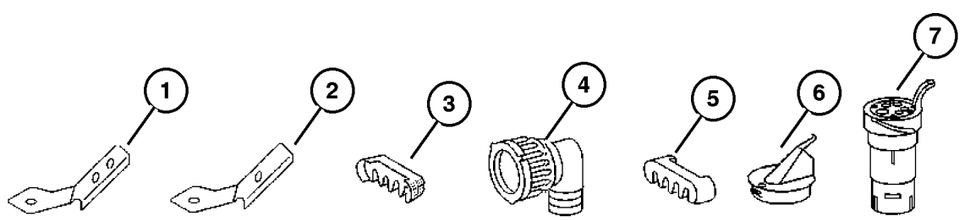

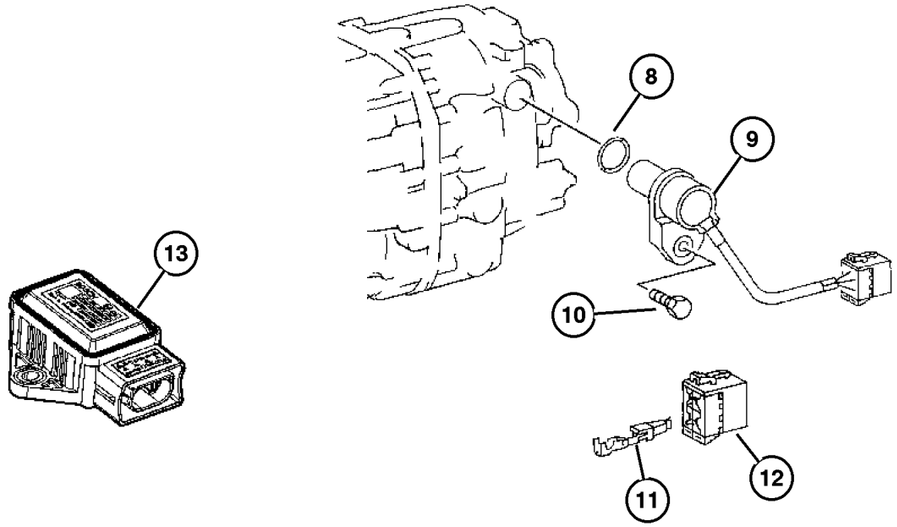

ITEM	PART NUMBER	QTY	LINE	SERIES	BODY	ENGINE	TRANS	TRIM	DESCRIPTION
		1	2, 6	L	11, 12, 14, 15, 16	EX8	DGZ		
		1	2, 6	L	51, 52, 54, 55, 56	EX8	DGZ		
		1	3, 7	L	02, 06	EX8	DGZ		
		1	3, 7	L	12, 15, 16	EX8	DGZ		
11									TERMINAL
	5103 877AA	99	2, 6	L	01, 02, 06	EX8	DGZ		
		99	2, 6	L	11, 12, 14, 15, 16	EX8	DGZ		
		99	2, 6	L	51, 52, 54, 55, 56	EX8	DGZ		
		99	3, 7	L	02, 06	EX8	DGZ		
		99	3, 7	L	12, 15, 16	EX8	DGZ		
12									CONNECTOR
	5103 931AA	1	2, 6	L	01, 02, 06	EX8	DGZ		
		1	2, 6	L	11, 12, 14, 15, 16	EX8	DGZ		
		1	2, 6	L	51, 52, 54, 55, 56	EX8	DGZ		
		1	3, 7	L	02, 06	EX8	DGZ		
		1	3, 7	L	12, 15, 16	EX8	DGZ		
13									SENSOR, acceleration
	5120 342AA	1	2, 6	L	01, 02, 06	EX8	DGZ		
		1	2, 6	L	11, 12, 14, 15, 16	EX8	DGZ		
		1	2, 6	L	51, 52, 54, 55, 56	EX8	DGZ		
		1	3, 7	L	02, 06	EX8	DGZ		
		1	3, 7	L	12, 15, 16	EX8	DGZ		

Refer to Model Legend Information Bookmark

AR = Use as required - = Non illustrated part # = New this model year

March 3, 2006

« RETURN TO GROUP INDEX

Sensors - Brakes
Figure 008-615

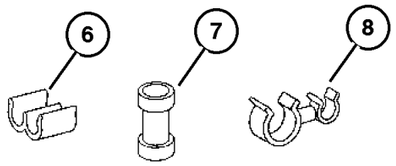

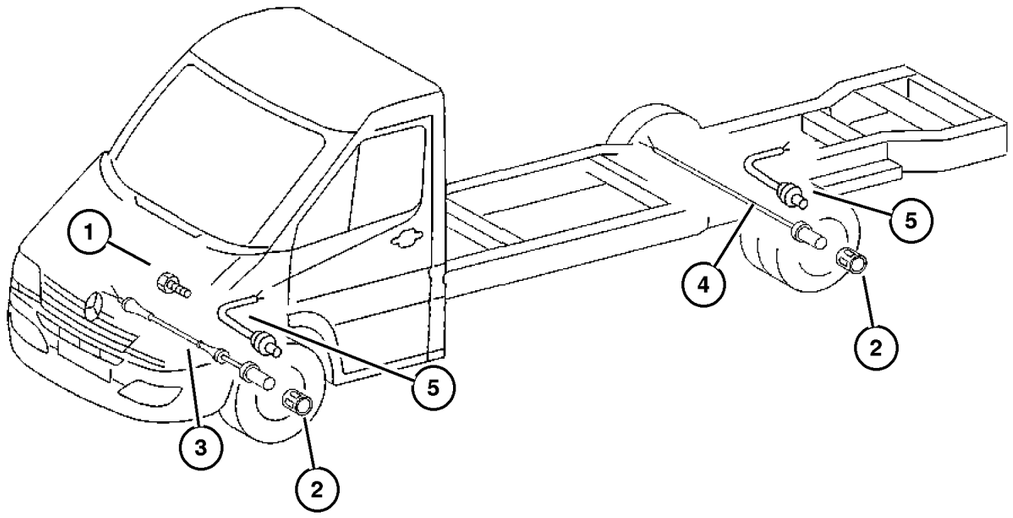

ITEM	PART NUMBER	QTY	LINE	SERIES	BODY	ENGINE	TRANS	TRIM	DESCRIPTION
1									SCREW
	5126 269AA	2	2, 6	L	01, 02, 06	EX8	DGZ		
		2	2, 6	L	11, 12, 14, 15, 16	EX8	DGZ		
		2	2, 6	L	51, 52, 54, 55, 56	EX8	DGZ		
		2	3, 7	L	02, 06	EX8	DGZ		
		2	3, 7	L	12, 15, 16	EX8	DGZ		
2									RETAINER
	5120 376AA	2	2, 6	L	01, 02, 06	EX8	DGZ		
		2	2, 6	L	11, 12, 14, 15, 16	EX8	DGZ		
		2	2, 6	L	51, 52, 54, 55, 56	EX8	DGZ		
		2	3, 7	L	02, 06	EX8	DGZ		
		2	3, 7	L	12, 15, 16	EX8	DGZ		
3									SENSOR, Wheel Speed
	5104 145AA	2	2, 6	L	01, 02, 06	EX8	DGZ		ALSO ORDER 2 X 05120376AA, 1 X 05103755AA & 1 X 05103801AA
		2	2, 6	L	11, 12, 14, 15, 16	EX8	DGZ		ALSO ORDER 2 X 05120376AA, 1 X 05103755AA & 1 X 05103801AA
		2	2, 6	L	51, 52, 54, 55, 56	EX8	DGZ		ALSO ORDER 2 X 05120376AA, 1 X 05103755AA & 1 X 05103801AA
		2	3, 7	L	02, 06	EX8	DGZ		ALSO ORDER 2 X 05120376AA, 1 X 05103755AA & 1 X 05103801AA
		2	3, 7	L	12, 15, 16	EX8	DGZ		ALSO ORDER 2 X 05120376AA, 1 X 05103755AA & 1 X 05103801AA
4									SENSOR, Wheel Speed
	5104 144AA	1	2, 6	L	01, 02, 06	EX8	DGZ		ALSO ORDER 2 X 05120376AA, 1 X 05103755AA & 1 X 05103801AA

Refer to Model Legend Information Bookmark

Sensors - Brakes
Figure 008-615

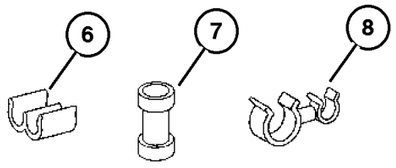

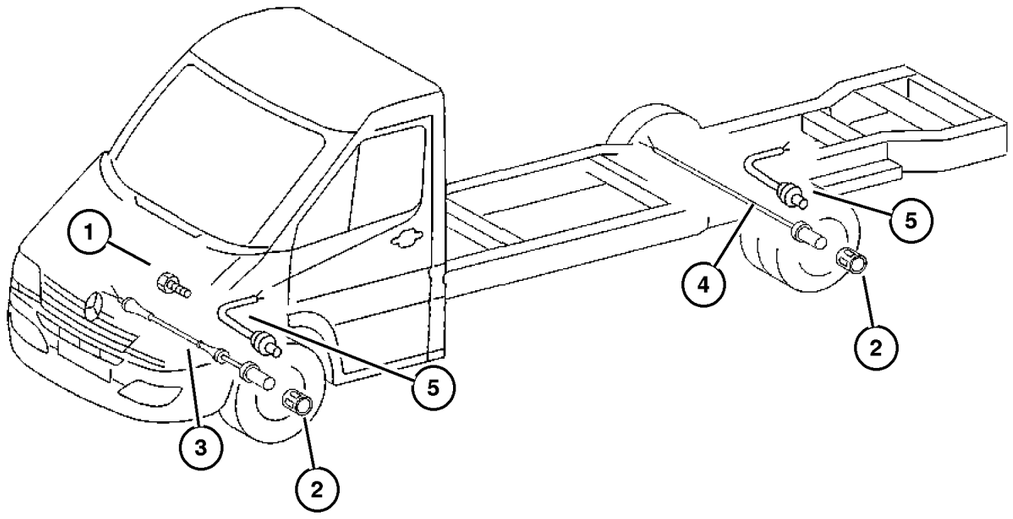

ITEM	PART NUMBER	QTY	LINE	SERIES	BODY	ENGINE	TRANS	TRIM	DESCRIPTION
		1	2, 6	L	11, 12, 14, 15, 16	EX8	DGZ		ALSO ORDER 2 X 05120376AA, 1 X 05103755AA & 1 X 05103801AA
		1	2, 6	L	51, 52, 54, 55, 56	EX8	DGZ		ALSO ORDER 2 X 05120376AA, 1 X 05103755AA & 1 X 05103801AA
		1	3, 7	L	02, 06	EX8	DGZ		ALSO ORDER 2 X 05120376AA, 1 X 05103755AA & 1 X 05103801AA
		1	3, 7	L	12, 15, 16	EX8	DGZ		ALSO ORDER 2 X 05120376AA, 1 X 05103755AA & 1 X 05103801AA
5									WIRING, Brake Indicator
	5103 654AA	1	2, 6	L	01, 02, 06	EX8	DGZ		
		1	2, 6	L	11, 12, 14, 15, 16	EX8	DGZ		
		1	2, 6	L	51, 52, 54, 55, 56	EX8	DGZ		
		1	3, 7	L	02, 06	EX8	DGZ		
		1	3, 7	L	12, 15, 16	EX8	DGZ		
6									CLIP, Wiring
	5126 024AA	2	2, 6	L	01, 02, 06	EX8	DGZ		
		2	2, 6	L	11, 12, 14, 15, 16	EX8	DGZ		
		2	2, 6	L	51, 52, 54, 55, 56	EX8	DGZ		
		2	3, 7	L	02, 06	EX8	DGZ		
		2	3, 7	L	12, 15, 16	EX8	DGZ		
7									CONNECTOR
	5103 755AA	99	2, 6	L	01, 02, 06	EX8	DGZ		
		99	2, 6	L	11, 12, 14, 15, 16	EX8	DGZ		
		99	2, 6	L	51, 52, 54, 55, 56	EX8	DGZ		

Refer to Model Legend Information Bookmark

AR = Use as required - = Non illustrated part # = New this model year

March 3, 2006

« RETURN TO GROUP INDEX

« »

Sensors - Brakes
Figure 008-615

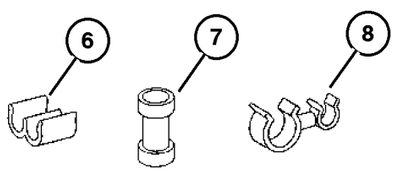

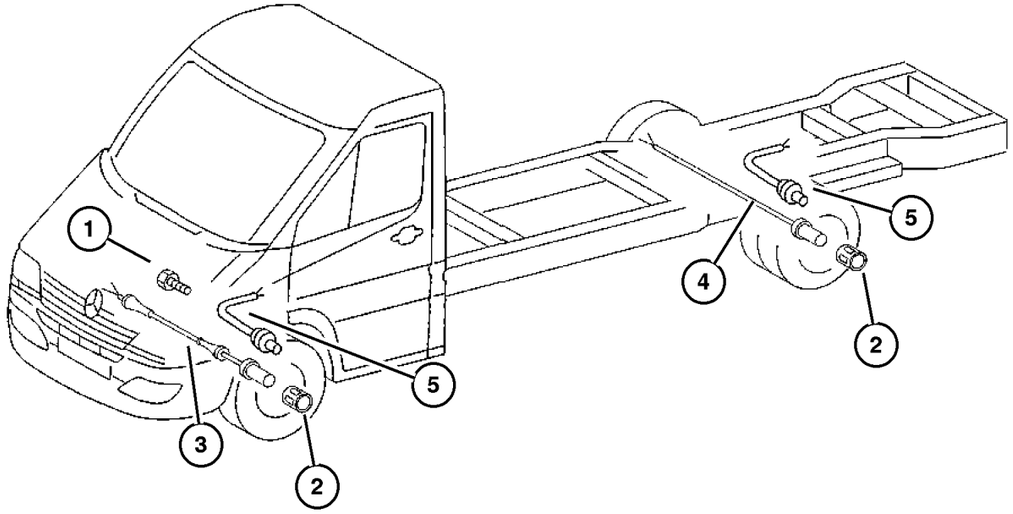

ITEM	PART NUMBER	QTY	LINE	SERIES	BODY	ENGINE	TRANS	TRIM	DESCRIPTION
		99	3, 7	L	02, 06	EX8	DGZ		
		99	3, 7	L	12, 15, 16	EX8	DGZ		
8	5120 943AA	6	2, 6	L	01, 02, 06	EX8	DGZ		BRACKET
		6	2, 6	L	11, 12, 14, 15, 16	EX8	DGZ		
		6	2, 6	L	51, 52, 54, 55, 56	EX8	DGZ		
		1	2, 6	L	01, 02, 06	EX8	DGZ		
		6	3, 7	L	02, 06	EX8	DGZ		
		6	3, 7	L	12, 15, 16	EX8	DGZ		

Refer to Model Legend Information Bookmark

Sensors Ambient Temperature and Rain
Figure 008-620

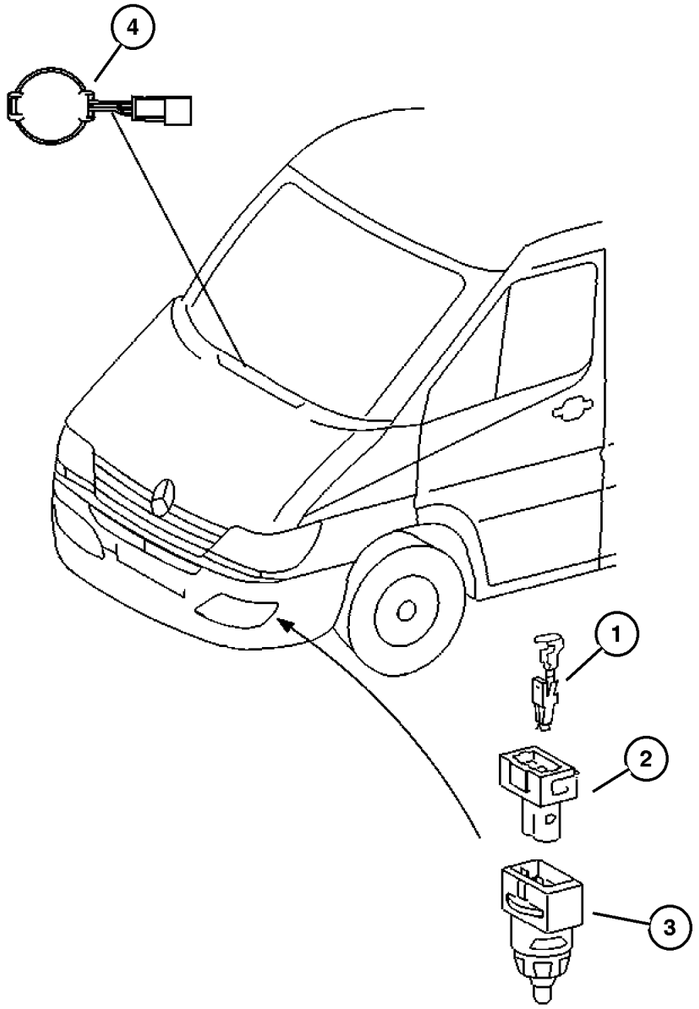

ITEM	PART NUMBER	QTY	LINE	SERIES	BODY	ENGINE	TRANS	TRIM	DESCRIPTION
1									TERMINAL
	5103 880AA	99	2, 6	L	01, 02, 06	EX8	DGZ		
		99	2, 6	L	11, 12, 14, 15, 16	EX8	DGZ		
		99	2, 6	L	51, 52, 54, 55, 56	EX8	DGZ		
		99	3, 7	L	02, 06	EX8	DGZ		
		99	3, 7	L	12, 15, 16	EX8	DGZ		
2									CONNECTOR
	5120 749AA	1	2, 6	L	01, 02, 06	EX8	DGZ		
		1	2, 6	L	11, 12, 14, 15, 16	EX8	DGZ		
		1	2, 6	L	51, 52, 54, 55, 56	EX8	DGZ		
		1	3, 7	L	02, 06	EX8	DGZ		
		1	3, 7	L	12, 15, 16	EX8	DGZ		
3									SENSOR, Ambient Temperature
	5103 563AA	1	2, 6	L	01, 02, 06	EX8	DGZ		
		1	2, 6	L	11, 12, 14, 15, 16	EX8	DGZ		
		1	2, 6	L	51, 52, 54, 55, 56	EX8	DGZ		
		1	3, 7	L	02, 06	EX8	DGZ		
		1	3, 7	L	12, 15, 16	EX8	DGZ		
4									SENSOR, Rain
	5124 421AA	1	2, 6	L	01, 02, 06	EX8	DGZ		
		1	2, 6	L	11, 12, 14, 15, 16	EX8	DGZ		
		1	2, 6	L	51, 52, 54, 55, 56	EX8	DGZ		

Refer to Model Legend Information Bookmark

Sensors Ambient Temperature and Rain
Figure 008-620

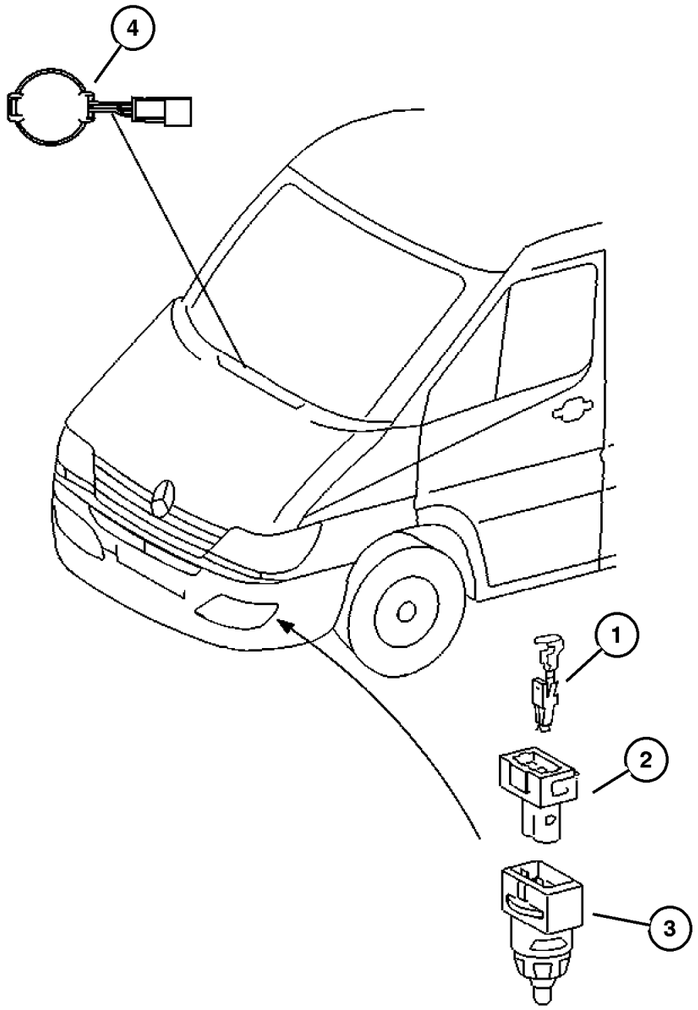

ITEM	PART NUMBER	QTY	LINE	SERIES	BODY	ENGINE	TRANS	TRIM	DESCRIPTION
		1	3, 7	L	02, 06	EX8	DGZ		
		1	3, 7	L	12, 15, 16	EX8	DGZ		

Refer to Model Legend Information Bookmark

Powertrain Control
Figure 008-715

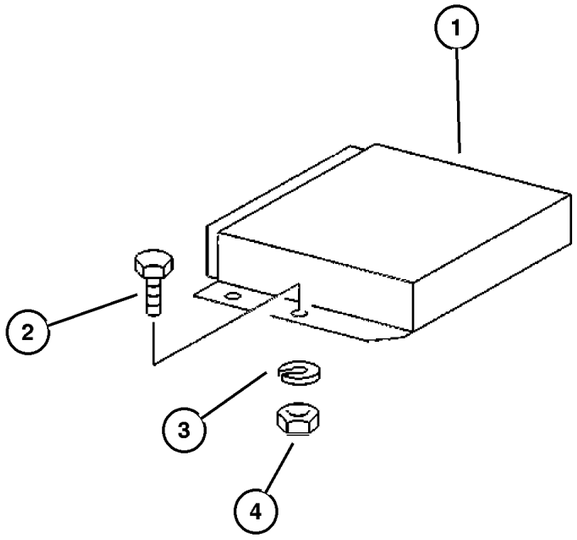

ITEM	PART NUMBER	QTY	LINE	SERIES	BODY	ENGINE	TRANS	TRIM	DESCRIPTION
1									MODULE, Powertrain Control
	5166 760AA	1	2, 6	L	01, 02, 06	EX8	DGZ		
		1	2, 6	L	11, 12, 14, 15, 16	EX8	DGZ		
		1	2, 6	L	51, 52, 54, 55, 56	EX8	DGZ		
		1	3, 7	L	02, 06	EX8	DGZ		
		1	3, 7	L	12, 15, 16	EX8	DGZ		
2									BOLT, M6x20
	5126 198AA	4	2, 6	L	01, 02, 06	EX8	DGZ		
		4	2, 6	L	11, 12, 14, 15, 16	EX8	DGZ		
		4	2, 6	L	51, 52, 54, 55, 56	EX8	DGZ		
		4	3, 7	L	02, 06	EX8	DGZ		
		4	3, 7	L	12, 15, 16	EX8	DGZ		
3									LOCK WASHER
	5126 240AA	4	2, 6	L	01, 02, 06	EX8	DGZ		
		4	2, 6	L	11, 12, 14, 15, 16	EX8	DGZ		
		4	2, 6	L	51, 52, 54, 55, 56	EX8	DGZ		
		4	3, 7	L	02, 06	EX8	DGZ		
		4	3, 7	L	12, 15, 16	EX8	DGZ		
4									NUT, Hex, (NOT SERVICED) (Not Serviced)
-5									MODULE, Transmission Control
	5140 526AA-	1	2, 6	L	01, 02, 06	EX8	DGZ		
		1	2, 6	L	11, 12, 14, 15, 16	EX8	DGZ		

Refer to Model Legend Information Bookmark

AR = Use as required - = Non illustrated part # = New this model year

March 3, 2006

« RETURN TO GROUP INDEX

»

Powertrain Control
Figure 008-715

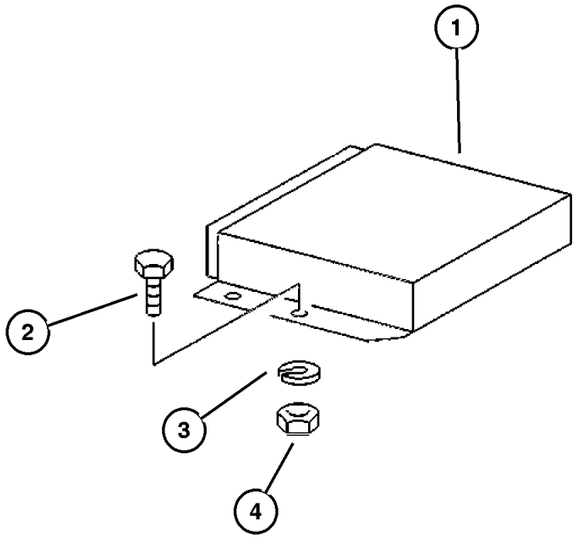

ITEM	PART NUMBER	QTY	LINE	SERIES	BODY	ENGINE	TRANS	TRIM	DESCRIPTION
		1	2, 6	L	51, 52, 54, 55, 56	EX8	DGZ		
		1	3, 7	L	02, 06	EX8	DGZ		
		1	3, 7	L	12, 15, 16	EX8	DGZ		

Refer to Model Legend Information Bookmark

AR = Use as required - = Non illustrated part # = New this model year

March 3, 2006

« RETURN TO GROUP INDEX

«

Switches - Instrument Panel
Figure 008-805

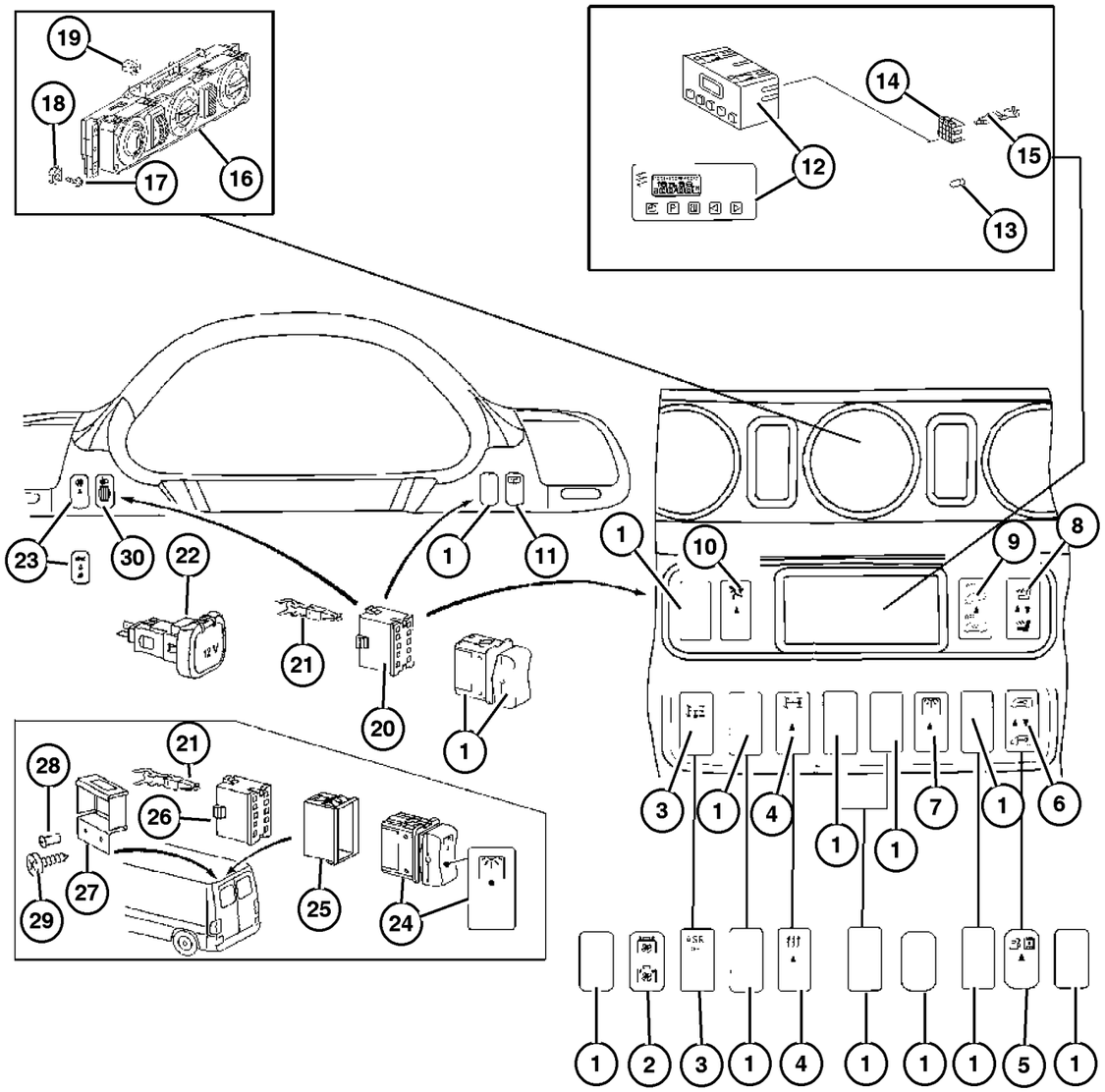

ITEM	PART NUMBER	QTY	LINE	SERIES	BODY	ENGINE	TRANS	TRIM	DESCRIPTION
1									COVER, Switch Opening
	5122 925AA	3	2, 6	L	01, 02, 06	EX8	DGZ		
		3	2, 6	L	11, 12, 14, 15, 16	EX8	DGZ		
		3	2, 6	L	51, 52, 54, 55, 56	EX8	DGZ		
		3	3, 7	L	02, 06	EX8	DGZ		
		3	3, 7	L	12, 15, 16	EX8	DGZ		
2									SWITCH, Ventilator
	5120 490AA	1	2, 6	L	11, 12, 14, 15, 16	EX8	DGZ		
		1	2, 6	L	51, 52, 54, 55, 56	EX8	DGZ		
		1	3, 7	L	12, 15, 16	EX8	DGZ		
3									SWITCH, Traction Control
	5120 472AA	1	3, 7	L	02, 06	EX8	DGZ		
		1	3, 7	L	12, 15, 16	EX8	DGZ		
4									SWITCH, Rear Blower
	5103 853AA	1	2, 6	L	01, 02, 06	EX8	DGZ		
		1	2, 6	L	11, 12, 14, 15, 16	EX8	DGZ		
		1	2, 6	L	51, 52, 54, 55, 56	EX8	DGZ		
		1	3, 7	L	02, 06	EX8	DGZ		
		1	3, 7	L	12, 15, 16	EX8	DGZ		
5									SWITCH, Wiper and Washer
	5124 392AA	1	2, 6	L	01, 02, 06	EX8	DGZ		
		1	2, 6	L	11, 12, 14, 15, 16	EX8	DGZ		

Refer to Model Legend Information Bookmark

Switches - Instrument Panel
Figure 008-805

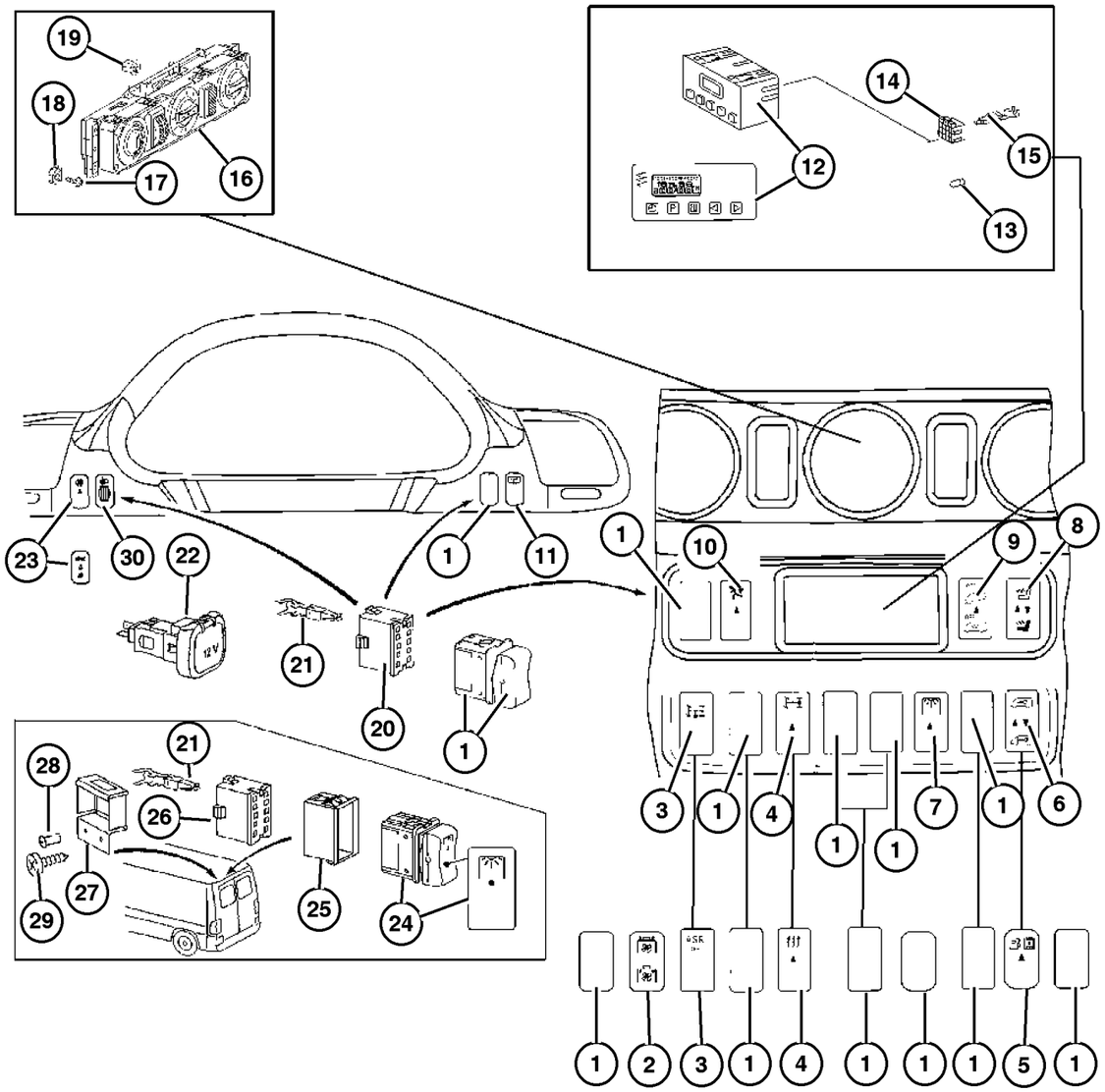

ITEM	PART NUMBER	QTY	LINE	SERIES	BODY	ENGINE	TRANS	TRIM	DESCRIPTION
		1	2, 6	L	51, 52, 54, 55, 56	EX8	DGZ		
		1	3, 7	L	02, 06	EX8	DGZ		
		1	3, 7	L	12, 15, 16	EX8	DGZ		
6	5103 855AA	1	2, 6	L	01, 02, 06	EX8	DGZ		SWITCH, Central Locking
		1	2, 6	L	11, 12, 14, 15, 16	EX8	DGZ		
		1	2, 6	L	51, 52, 54, 55, 56	EX8	DGZ		
		1	3, 7	L	02, 06	EX8	DGZ		
		1	3, 7	L	12, 15, 16	EX8	DGZ		
7	5103 844AA	1	2, 6	L	11, 12, 14, 15, 16	EX8	DGZ		SWITCH, Cargo Lamp
		1	3, 7	L	02, 06	EX8	DGZ		
		1	3, 7	L	12, 15, 16	EX8	DGZ		
8	5103 854AA	1	2, 6	L	01, 02, 06	EX8	DGZ		SWITCH, Heated Seat
	5120 444AA	2	2, 6	L	01, 02, 06	EX8	DGZ		
		2	2, 6	L	11, 12, 14, 15, 16	EX8	DGZ		
		2	2, 6	L	51, 52, 54, 55, 56	EX8	DGZ		
		2	3, 7	L	02, 06	EX8	DGZ		
		2	3, 7	L	12, 15, 16	EX8	DGZ		
9	5120 465AA	1	2, 6	L	01, 02, 06	EX8	DGZ		SWITCH, Security Alarm
		1	2, 6	L	11, 12, 14, 15, 16	EX8	DGZ		

Refer to Model Legend Information Bookmark

Switches - Instrument Panel
Figure 008-805

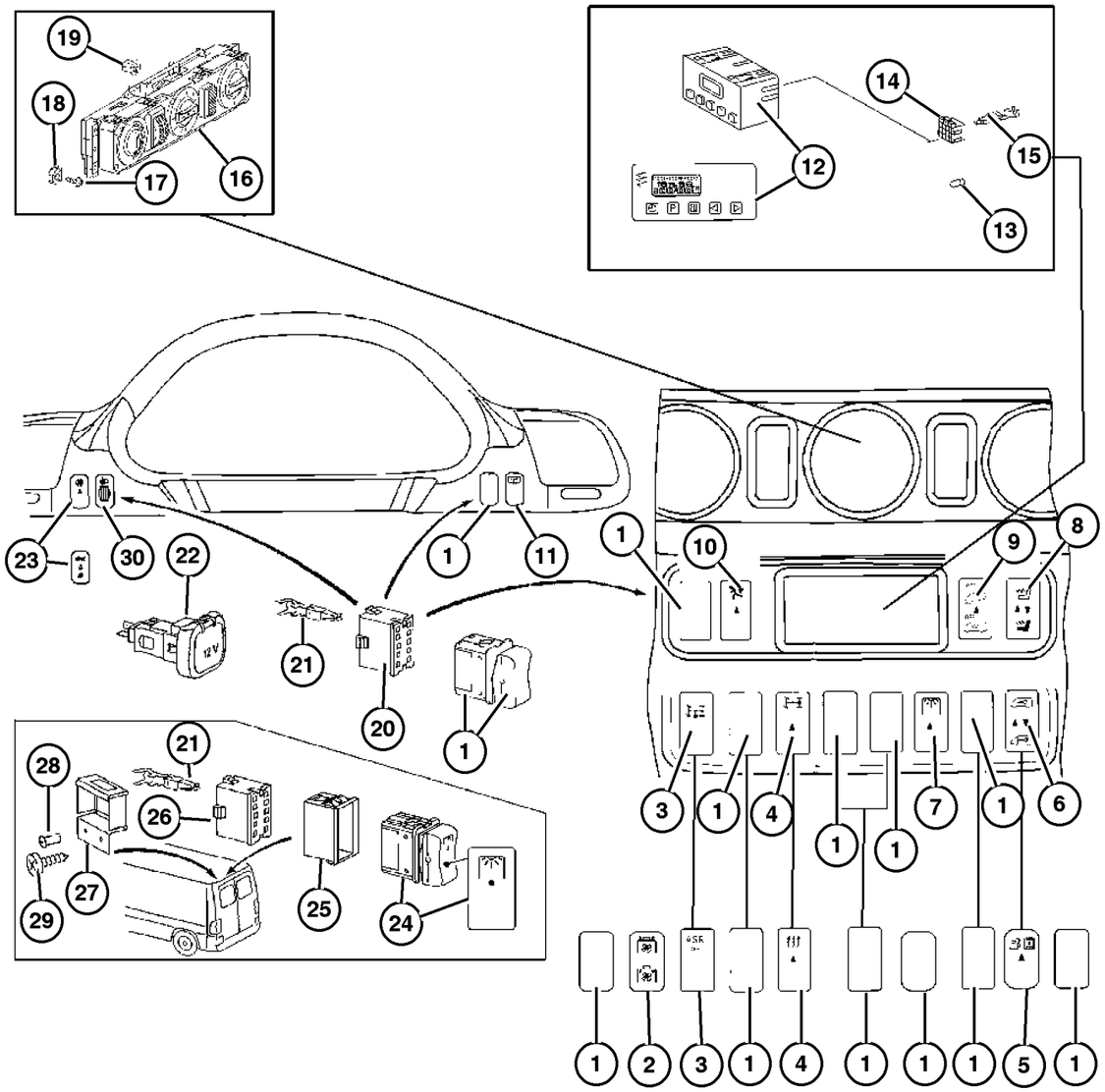

ITEM	PART NUMBER	QTY	LINE	SERIES	BODY	ENGINE	TRANS	TRIM	DESCRIPTION
		1	2, 6	L	51, 52, 54, 55, 56	EX8	DGZ		
		1	3, 7	L	02, 06	EX8	DGZ		
		1	3, 7	L	12, 15, 16	EX8	DGZ		
10	5120 466AA	1	2, 6	L	01, 02, 06	EX8	DGZ		SWITCH, Security Alarm
		1	2, 6	L	11, 12, 14, 15, 16	EX8	DGZ		
		1	2, 6	L	51, 52, 54, 55, 56	EX8	DGZ		
		1	3, 7	L	02, 06	EX8	DGZ		
		1	3, 7	L	12, 15, 16	EX8	DGZ		
11	5120 438AA	1	2, 6	L	11, 12, 14, 15, 16	EX8	DGZ		SWITCH, Defogger
		1	2, 6	L	51, 52, 54, 55, 56	EX8	DGZ		
		1	3, 7	L	12, 15, 16	EX8	DGZ		
12	5120 301AA	1	2, 6	L	01, 02, 06	EX8	DGZ		CLOCK
		1	2, 6	L	11, 12, 14, 15, 16	EX8	DGZ		
		1	2, 6	L	51, 52, 54, 55, 56	EX8	DGZ		
		1	3, 7	L	02, 06	EX8	DGZ		
		1	3, 7	L	12, 15, 16	EX8	DGZ		
13	5133 469AA	1	2, 6	L	01, 02, 06	EX8	DGZ		BULB, 12V 1.5W
		1	2, 6	L	11, 12, 14, 15, 16	EX8	DGZ		

Refer to Model Legend Information Bookmark

Switches - Instrument Panel
Figure 008-805

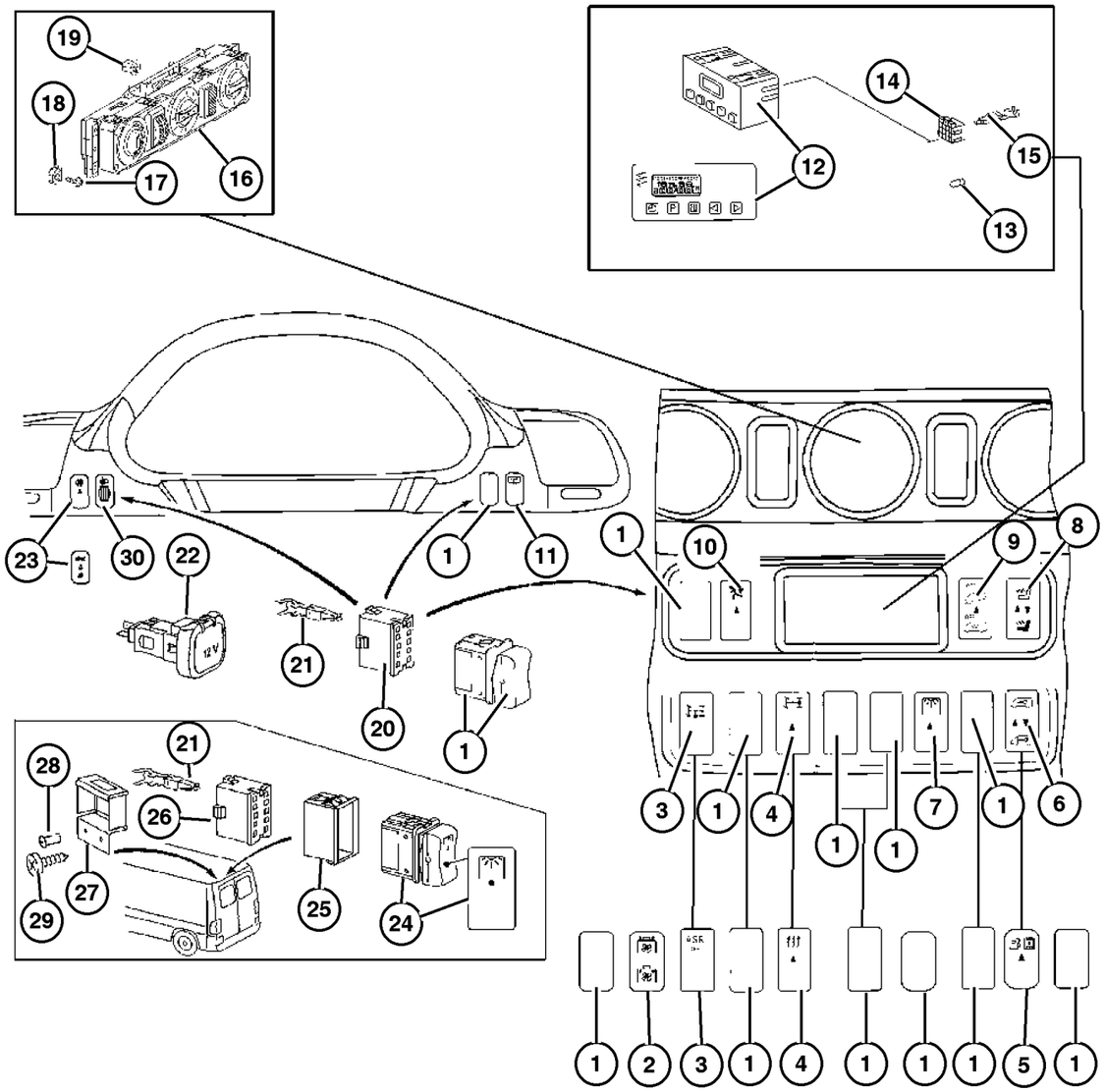

ITEM	PART NUMBER	QTY	LINE	SERIES	BODY	ENGINE	TRANS	TRIM	DESCRIPTION
		1	2, 6	L	51, 52, 54, 55, 56	EX8	DGZ		
		1	3, 7	L	02, 06	EX8	DGZ		
		1	3, 7	L	12, 15, 16	EX8	DGZ		
14	5120 552AA	1	2, 6	L	01, 02, 06	EX8	DGZ		CONNECTOR
		1	2, 6	L	11, 12, 14, 15, 16	EX8	DGZ		
		1	2, 6	L	51, 52, 54, 55, 56	EX8	DGZ		
		1	3, 7	L	02, 06	EX8	DGZ		
		1	3, 7	L	12, 15, 16	EX8	DGZ		
15	5103 881AA	99	2, 6	L	01, 02, 06	EX8	DGZ		TERMINAL
		99	2, 6	L	11, 12, 14, 15, 16	EX8	DGZ		
		99	2, 6	L	51, 52, 54, 55, 56	EX8	DGZ		
		99	3, 7	L	02, 06	EX8	DGZ		
		99	3, 7	L	12, 15, 16	EX8	DGZ		
16	5103 643AA	1	2, 6	L	01, 02, 06	EX8	DGZ	[HAB]	CONTROL, A/C And Heater
		1	2, 6	L	11, 12, 14, 15, 16	EX8	DGZ	[HAB]	
		1	2, 6	L	51, 52, 54, 55, 56	EX8	DGZ	[HAB]	
		1	3, 7	L	02, 06	EX8	DGZ	[HAB]	
		1	3, 7	L	12, 15, 16	EX8	DGZ	[HAB]	
	5103 644AA	1	2, 6	L	01, 02, 06	EX8	DGZ	[HAB,3JV]	

Refer to Model Legend Information Bookmark

AR = Use as required - = Non illustrated part # = New this model year

March 3, 2006

Switches - Instrument Panel
Figure 008-805

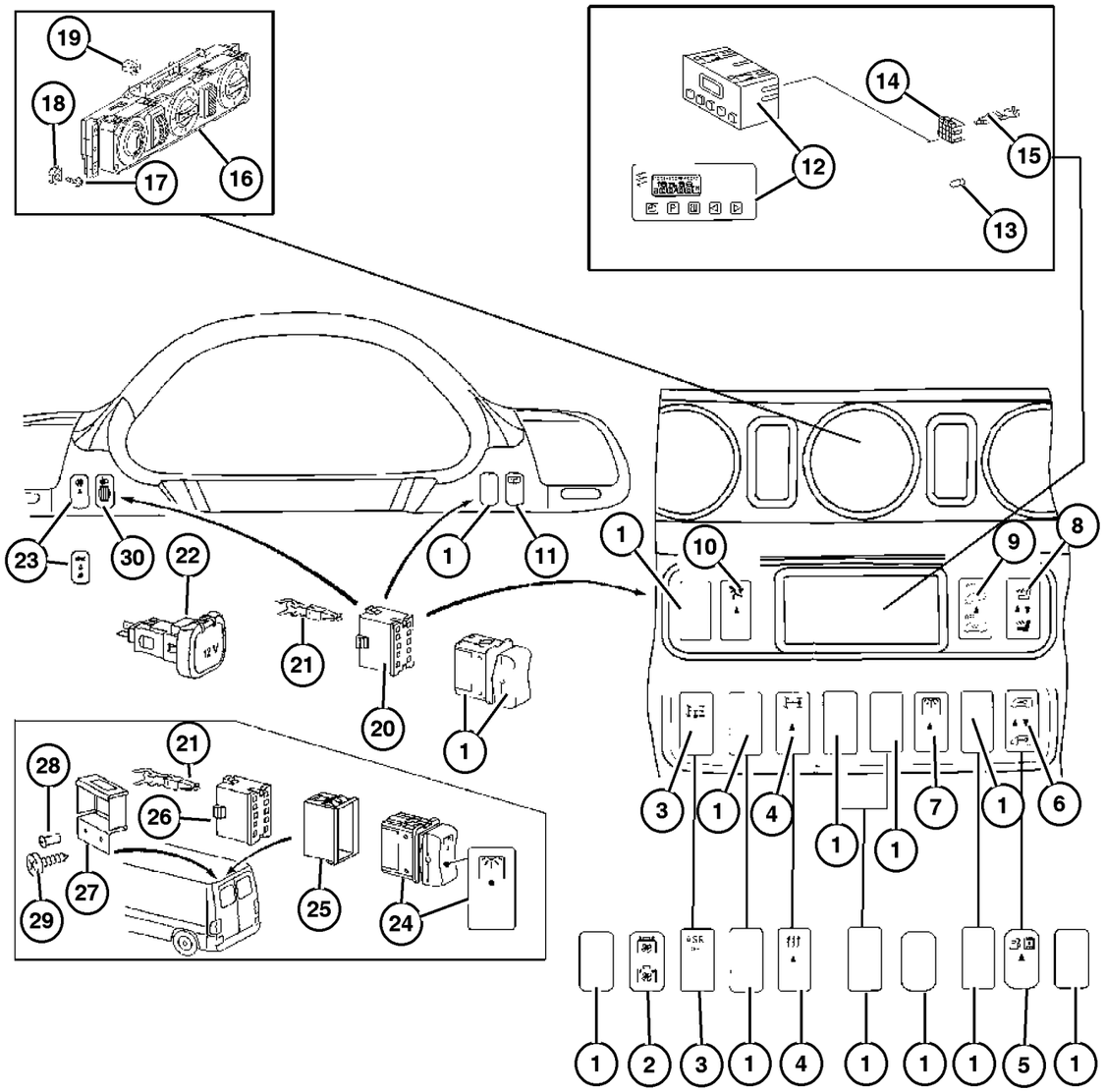

ITEM	PART NUMBER	QTY	LINE	SERIES	BODY	ENGINE	TRANS	TRIM	DESCRIPTION
		1	2, 6	L	11, 12, 14, 15, 16	EX8	DGZ		[HAB,3JV]
		1	2, 6	L	51, 52, 54, 55, 56	EX8	DGZ		[HAB,3JV]
		1	3, 7	L	02, 06	EX8	DGZ		[HAB,3JV]
		1	3, 7	L	12, 15, 16	EX8	DGZ		[HAB,3JV]
	5103 690AA	1	2, 6	L	01, 02, 06	EX8	DGZ		
		1	2, 6	L	11, 12, 14, 15, 16	EX8	DGZ		
		1	2, 6	L	51, 52, 54, 55, 56	EX8	DGZ		
		1	3, 7	L	02, 06	EX8	DGZ		
		1	3, 7	L	12, 15, 16	EX8	DGZ		
17									SCREW
	6104 610AA	2	2, 6	L	01, 02, 06	EX8	DGZ		
		2	2, 6	L	11, 12, 14, 15, 16	EX8	DGZ		
		2	2, 6	L	51, 52, 54, 55, 56	EX8	DGZ		
		2	3, 7	L	02, 06	EX8	DGZ		
		2	3, 7	L	12, 15, 16	EX8	DGZ		
18									NUT, Spring
	5125 861AA	2	2, 6	L	01, 02, 06	EX8	DGZ		
		2	2, 6	L	11, 12, 14, 15, 16	EX8	DGZ		
		2	2, 6	L	51, 52, 54, 55, 56	EX8	DGZ		
		2	3, 7	L	02, 06	EX8	DGZ		
		2	3, 7	L	12, 15, 16	EX8	DGZ		
19									BULB

Refer to Model Legend Information Bookmark

Switches - Instrument Panel
Figure 008-805

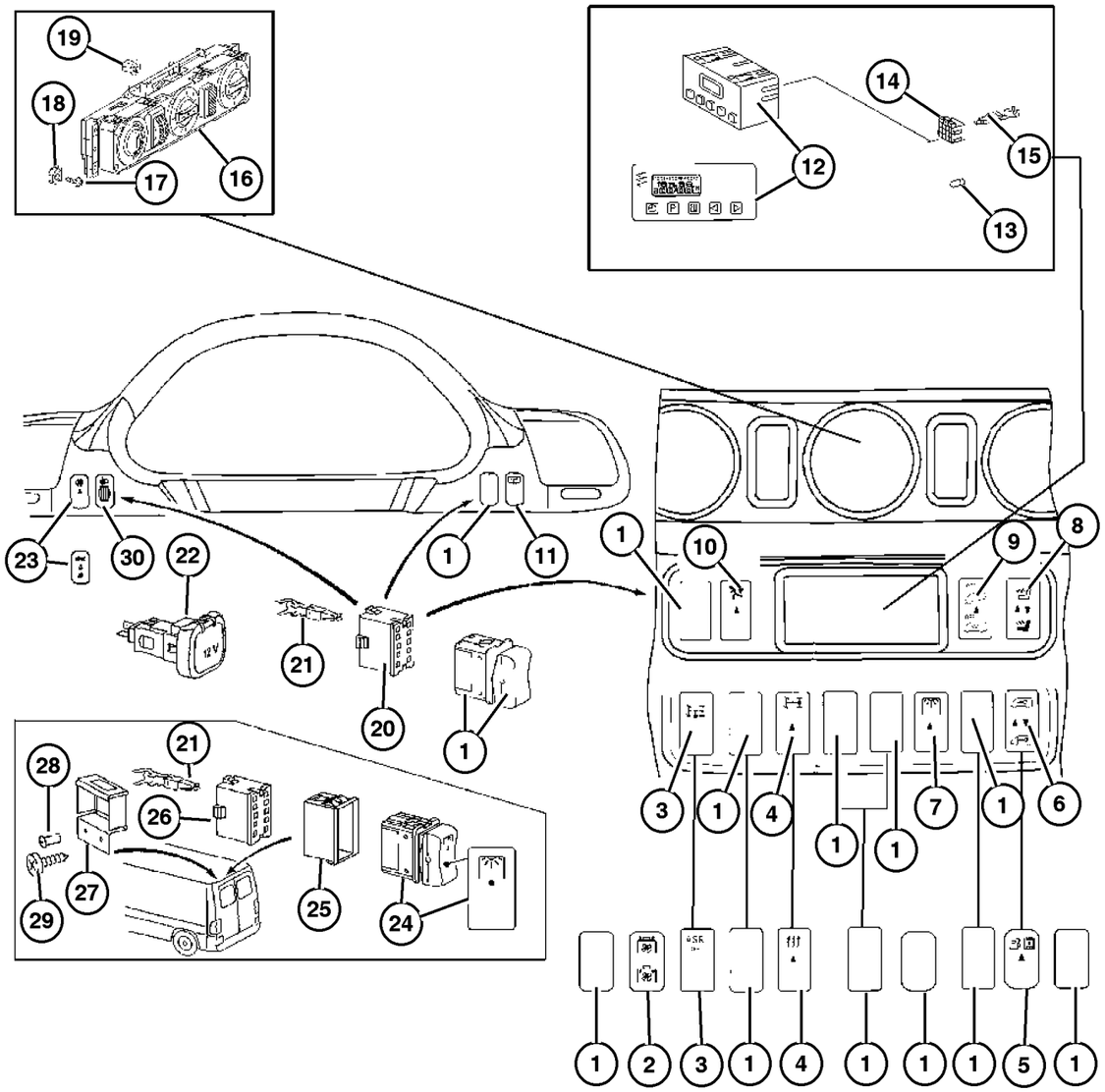

ITEM	PART NUMBER	QTY	LINE	SERIES	BODY	ENGINE	TRANS	TRIM	DESCRIPTION
	5133 468AA	1	2, 6	L	01, 02, 06	EX8	DGZ		
		1	2, 6	L	11, 12, 14, 15, 16	EX8	DGZ		
		1	2, 6	L	51, 52, 54, 55, 56	EX8	DGZ		
		1	3, 7	L	02, 06	EX8	DGZ		
		1	3, 7	L	12, 15, 16	EX8	DGZ		
20									CONNECTOR
	5120 633AA	99	2, 6	L	01, 02, 06	EX8	DGZ		
		99	2, 6	L	11, 12, 14, 15, 16	EX8	DGZ		
		99	2, 6	L	51, 52, 54, 55, 56	EX8	DGZ		
		99	3, 7	L	02, 06	EX8	DGZ		
		99	3, 7	L	12, 15, 16	EX8	DGZ		
21									TERMINAL
	5103 882AA	99	2, 6	L	01, 02, 06	EX8	DGZ		
		99	2, 6	L	11, 12, 14, 15, 16	EX8	DGZ		
		99	2, 6	L	51, 52, 54, 55, 56	EX8	DGZ		
		1	3, 7	L	02, 06	EX8	DGZ		
		1	3, 7	L	12, 15, 16	EX8	DGZ		
22									CONTROL, Air Conditioning
	5103 907AA	1	2, 6	L	11, 12, 14, 15, 16	EX8	DGZ		
		1	2, 6	L	51, 52, 54, 55, 56	EX8	DGZ		
		1	3, 7	L	12, 15, 16	EX8	DGZ		
23									SWITCH, Fog Lamp

Refer to Model Legend Information Bookmark

Switches - Instrument Panel
Figure 008-805

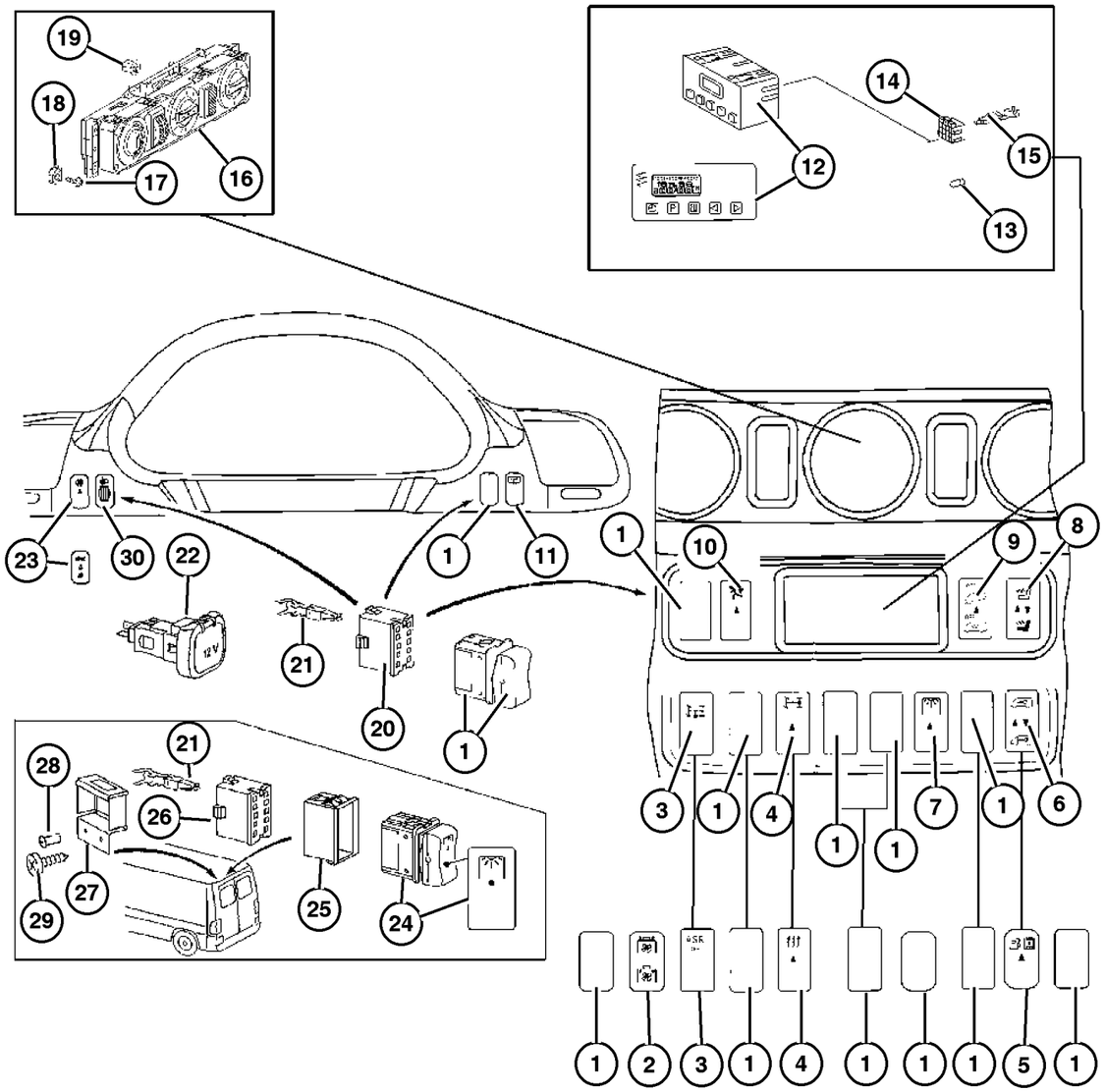

ITEM	PART NUMBER	QTY	LINE	SERIES	BODY	ENGINE	TRANS	TRIM	DESCRIPTION
	5103 864AA	1	2, 6	L	01, 02, 06	EX8	DGZ		
		1	2, 6	L	11, 12, 14, 15, 16	EX8	DGZ		
		1	2, 6	L	51, 52, 54, 55, 56	EX8	DGZ		
		1	3, 7	L	02, 06	EX8	DGZ		
		1	3, 7	L	12, 15, 16	EX8	DGZ		
24									SWITCH, Cargo Lamp
	5103 844AA	1	2, 6	L	11, 12, 14, 15, 16	EX8	DGZ		
		1	3, 7	L	02, 06	EX8	DGZ		
		1	3, 7	L	12, 15, 16	EX8	DGZ		
25									HOUSING, Switch
	5120 247AA	2	2, 6	L	11, 12, 14, 15, 16	EX8	DGZ		
		2	3, 7	L	12, 15, 16	EX8	DGZ		
26									CONNECTOR
	5120 596AA	1	2, 6	L	11, 12, 14, 15, 16	EX8	DGZ		
		2	3, 7	L	12, 15, 16	EX8	DGZ		
27									COVER, Switch
	5104 354AA	2	2, 6	L	01, 02, 06	EX8	DGZ		
		2	2, 6	L	11, 12, 14, 15, 16	EX8	DGZ		
		2	2, 6	L	51, 52, 54, 55, 56	EX8	DGZ		
		2	3, 7	L	02, 06	EX8	DGZ		
		2	3, 7	L	12, 15, 16	EX8	DGZ		
28									RIVET
	5103 838AA	4	2, 6	L	01, 02, 06	EX8	DGZ		

Refer to Model Legend Information Bookmark

Switches - Instrument Panel
Figure 008-805

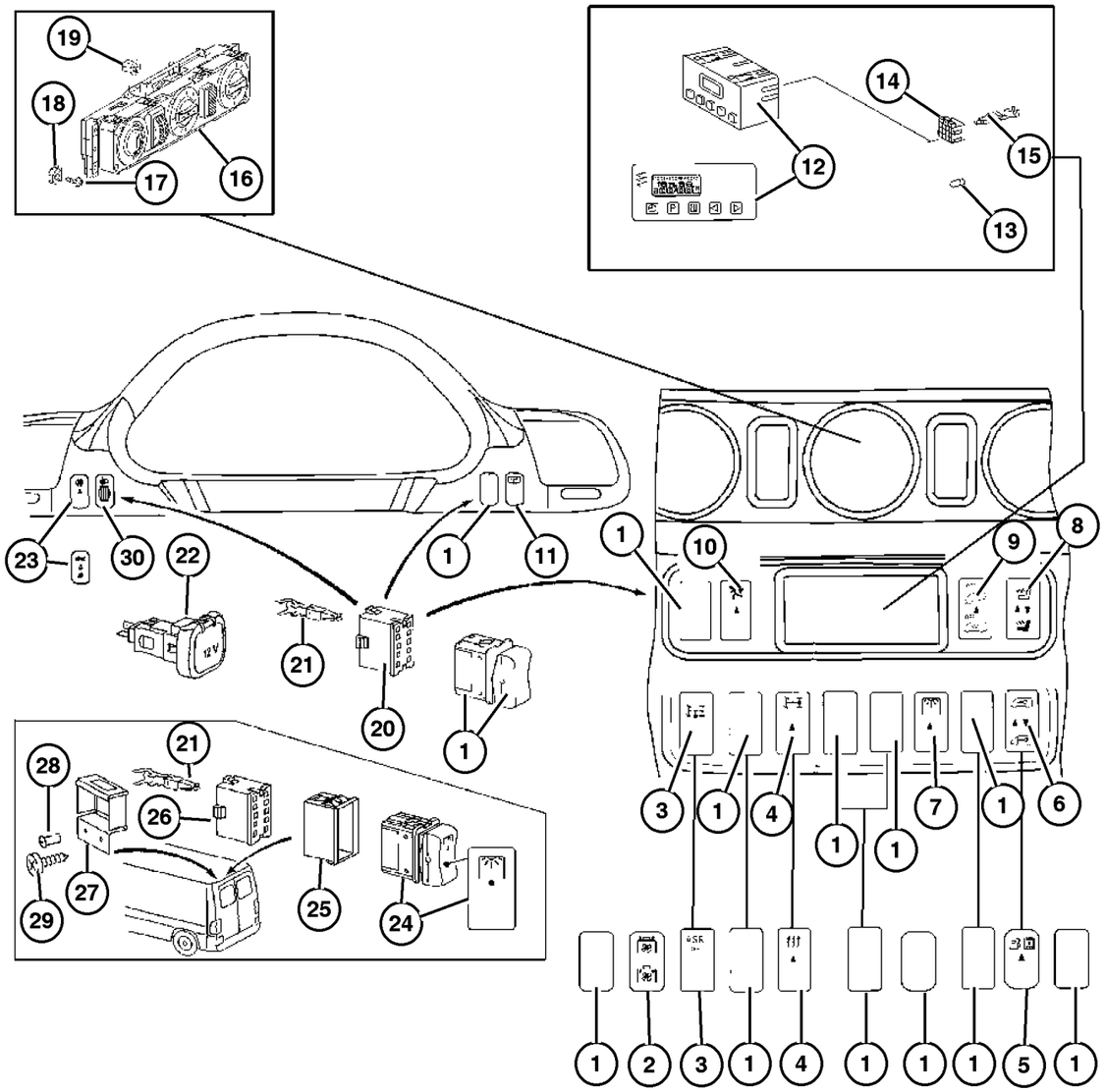

ITEM	PART NUMBER	QTY	LINE	SERIES	BODY	ENGINE	TRANS	TRIM	DESCRIPTION
		4	2, 6	L	11, 12, 14, 15, 16	EX8	DGZ		
		4	2, 6	L	51, 52, 54, 55, 56	EX8	DGZ		
		4	3, 7	L	02, 06	EX8	DGZ		
		4	3, 7	L	12, 15, 16	EX8	DGZ		
29	5126 272AA	1	2, 6	L	11, 12, 14, 15, 16	EX8	DGZ		SCREW
		1	2, 6	L	51, 52, 54, 55, 56	EX8	DGZ		
		1	3, 7	L	12, 15, 16	EX8	DGZ		
30	5103 658AA	1	2, 6	L	01, 02, 06	EX8	DGZ		SWITCH, Headlamp Leveling
		1	2, 6	L	11, 12, 14, 15, 16	EX8	DGZ		
		1	2, 6	L	51, 52, 54, 55, 56	EX8	DGZ		
		1	3, 7	L	02, 06	EX8	DGZ		
		1	3, 7	L	12, 15, 16	EX8	DGZ		

Refer to Model Legend Information Bookmark

AR = Use as required - = Non illustrated part # = New this model year

March 3, 2006

Switches -Steering Column
Figure 008-810

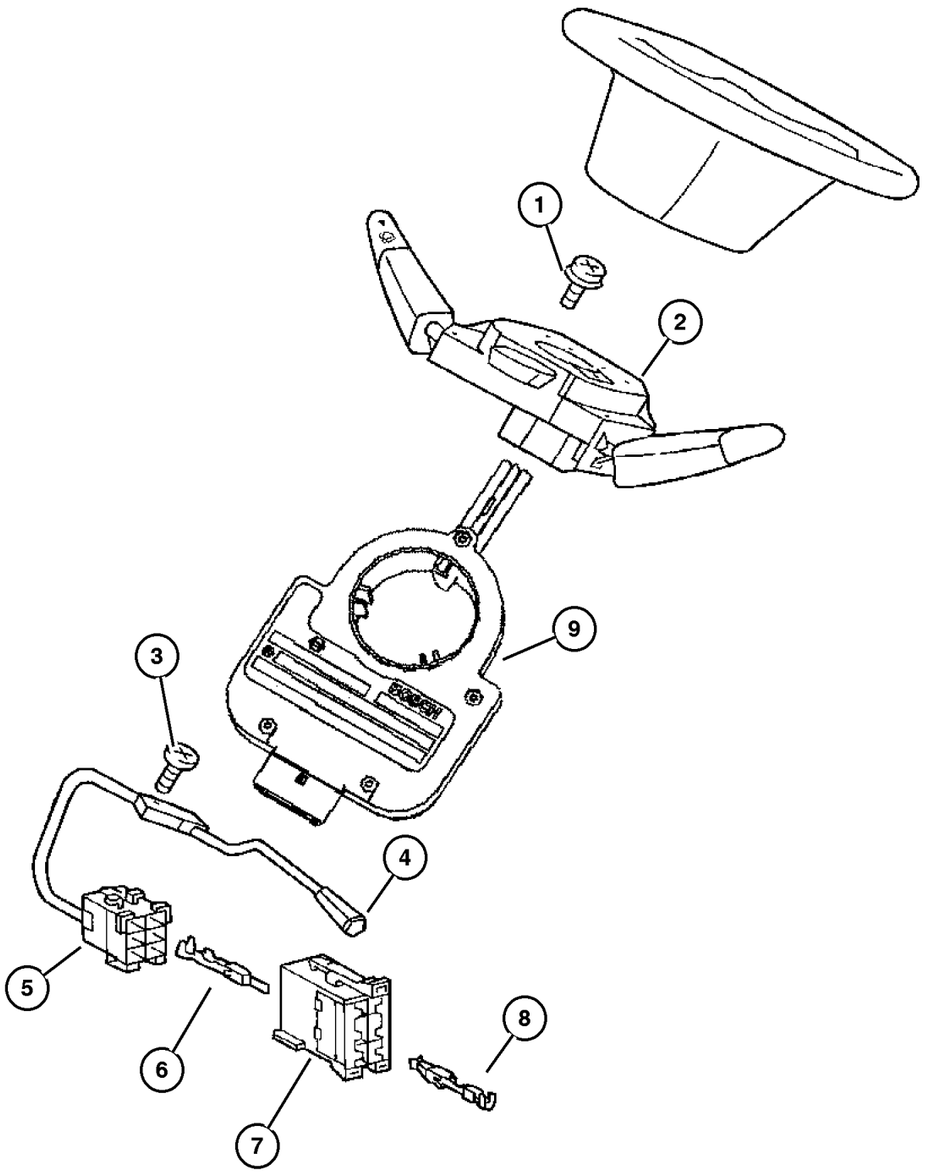

ITEM	PART NUMBER	QTY	LINE	SERIES	BODY	ENGINE	TRANS	TRIM	DESCRIPTION
1									SCREW
	5104 636AA	2	2, 6	L	01, 02, 06	EX8	DGZ		
		2	2, 6	L	11, 12, 14, 15, 16	EX8	DGZ		
		2	2, 6	L	51, 52, 54, 55, 56	EX8	DGZ		
		2	3, 7	L	02, 06	EX8	DGZ		
		2	3, 7	L	12, 15, 16	EX8	DGZ		
2									SWITCH, steering column
	5103 539AA	1	2, 6	L	06	EX8	DGZ		[5AF]
		1	2, 6	L	16	EX8	DGZ		[5AF]
		1	2, 6	L	56	EX8	DGZ		[5AF]
		1	3, 7	L	02	EX8	DGZ		[5AF]
		1	3, 7	L	06	EX8	DGZ		[5AF]
		1	3, 7	L	16	EX8	DGZ		[5AF]
	5103 745AA	1	2, 6	L	01, 02	EX8	DGZ		[4E9]
		1	2, 6	L	11, 12, 14, 15	EX8	DGZ		[4E9]
		1	2, 6	L	51, 52, 54, 55	EX8	DGZ		[4E9]
		1	3, 7	L	12, 15	EX8	DGZ		[4E9]
3									SCREW
	5126 175AA	1	2, 6	L	01, 02, 06	EX8	DGZ		
		1	2, 6	L	11, 12, 14, 15, 16	EX8	DGZ		
		1	2, 6	L	51, 52, 54, 55, 56	EX8	DGZ		
		1	3, 7	L	02, 06	EX8	DGZ		
		1	3, 7	L	12, 15, 16	EX8	DGZ		
4									SWITCH, Speed Control
	5103 744AA	1	2, 6	L	01, 02, 06	EX8	DGZ		
		1	2, 6	L	11, 12, 14, 15, 16	EX8	DGZ		

Refer to Model Legend Information Bookmark

AR = Use as required - = Non illustrated part # = New this model year

March 3, 2006

« RETURN TO GROUP INDEX

»

Switches -Steering Column
Figure 008-810

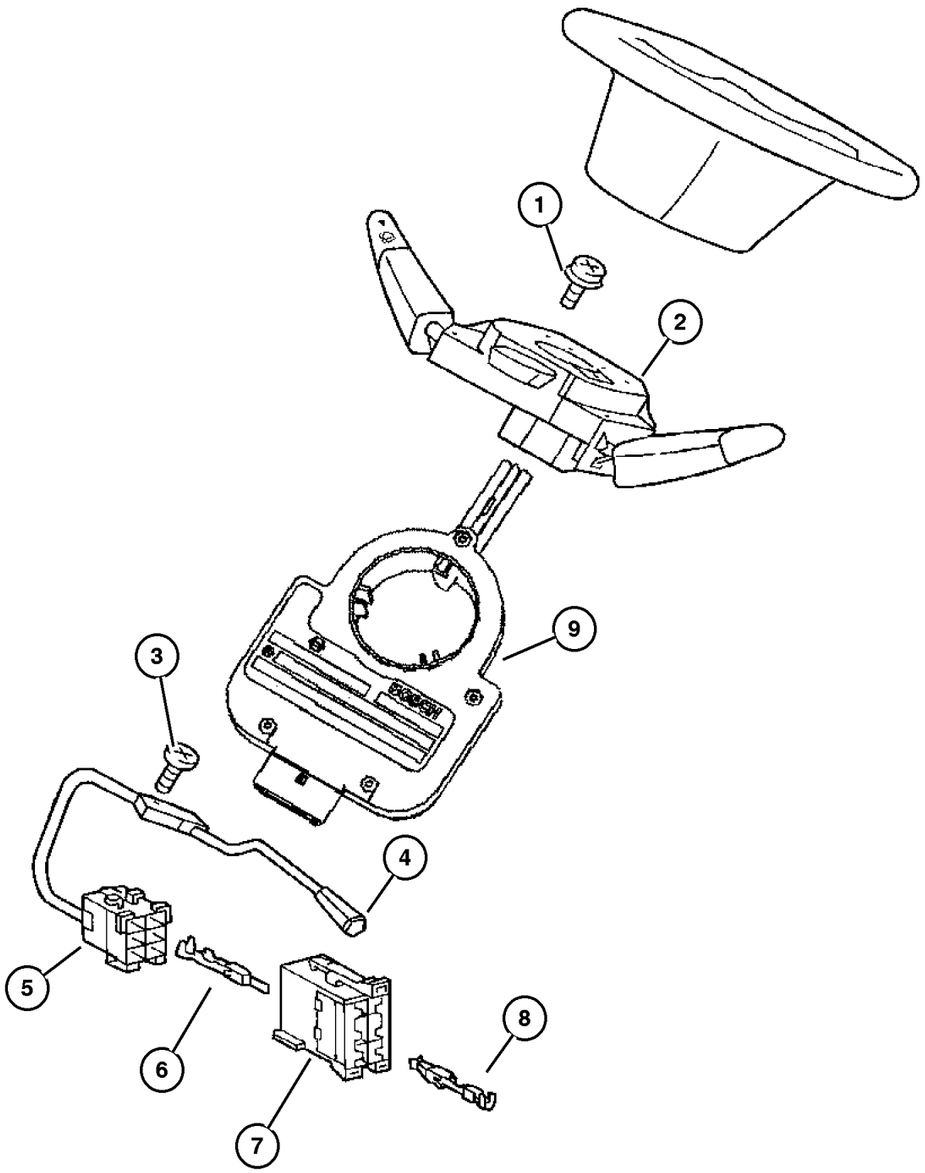

ITEM	PART NUMBER	QTY	LINE	SERIES	BODY	ENGINE	TRANS	TRIM	DESCRIPTION
		1	2, 6	L	51, 52, 54, 55, 56	EX8	DGZ		
		1	3, 7	L	02, 06	EX8	DGZ		
		1	3, 7	L	12, 15, 16	EX8	DGZ		
5	5120 792AA	1	2, 6	L	01, 02, 06	EX8	DGZ		INSULATOR, 6 Way
		1	2, 6	L	11, 12, 14, 15, 16	EX8	DGZ		
		1	2, 6	L	51, 52, 54, 55, 56	EX8	DGZ		
		1	3, 7	L	02, 06	EX8	DGZ		
		1	3, 7	L	12, 15, 16	EX8	DGZ		
6	5103 909AA	99	2, 6	L	01, 02, 06	EX8	DGZ		TERMINAL, Male
		99	2, 6	L	11, 12, 14, 15, 16	EX8	DGZ		
		99	2, 6	L	51, 52, 54, 55, 56	EX8	DGZ		
		99	3, 7	L	02, 06	EX8	DGZ		
		99	3, 7	L	12, 15, 16	EX8	DGZ		
7	5120 786AA	1	2, 6	L	01, 02, 06	EX8	DGZ		CONNECTOR
		1	2, 6	L	11, 12, 14, 15, 16	EX8	DGZ		
		1	2, 6	L	51, 52, 54, 55, 56	EX8	DGZ		
		1	3, 7	L	02, 06	EX8	DGZ		
		1	3, 7	L	12, 15, 16	EX8	DGZ		
8	5133 478AA	99	2, 6	L	01, 02, 06	EX8	DGZ		TERMINAL

Refer to Model Legend Information Bookmark

Switches -Steering Column
Figure 008-810

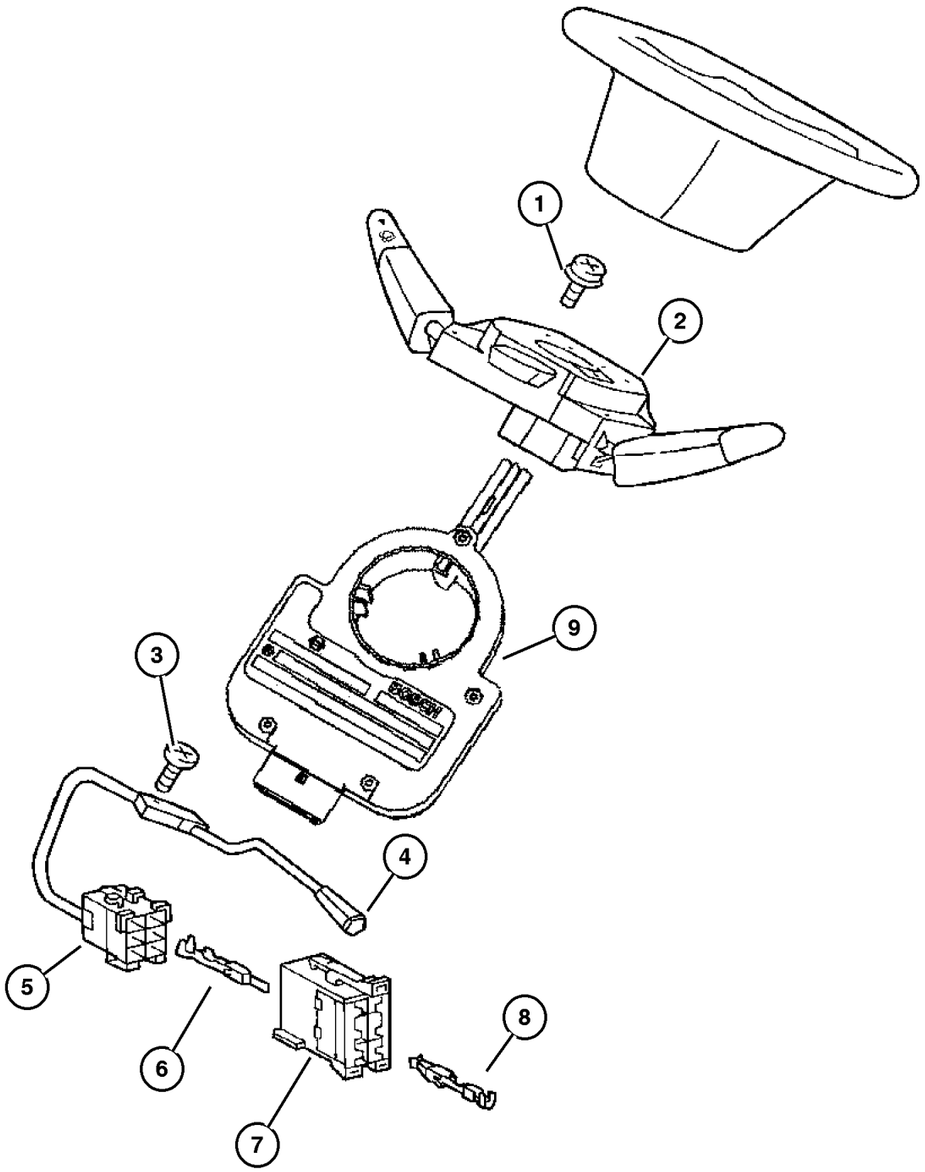

ITEM	PART NUMBER	QTY	LINE	SERIES	BODY	ENGINE	TRANS	TRIM	DESCRIPTION
		99	2, 6	L	11, 12, 14, 15, 16	EX8	DGZ		
		99	2, 6	L	51, 52, 54, 55, 56	EX8	DGZ		
		99	3, 7	L	02, 06	EX8	DGZ		
		99	3, 7	L	12, 15, 16	EX8	DGZ		
9									SENSOR, Steering Wheel Angle
	5129 606AA	1	2, 6	L	01, 02, 06	EX8	DGZ		
		1	2, 6	L	11, 12, 14, 15, 16	EX8	DGZ		
		1	2, 6	L	51, 52, 54, 55, 56	EX8	DGZ		

Refer to Model Legend Information Bookmark

Switches - Doors
Figure 008-815

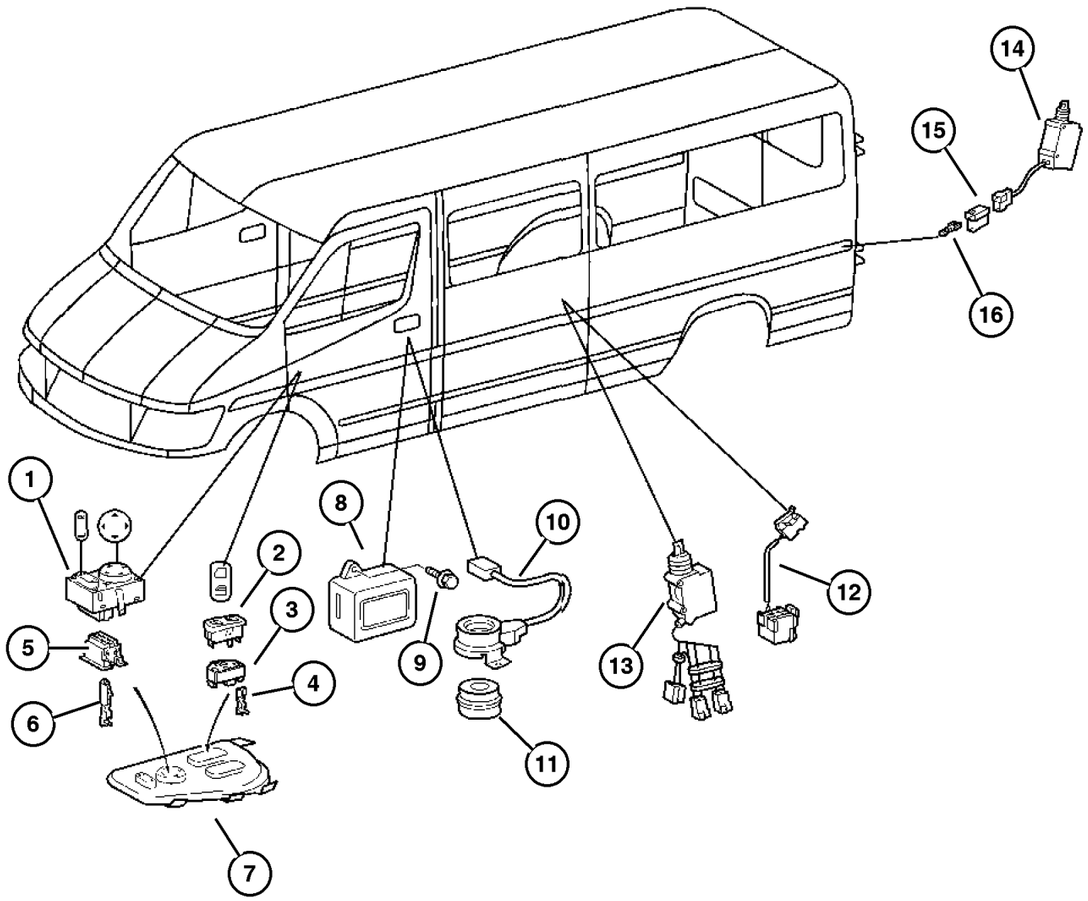

ITEM	PART NUMBER	QTY	LINE	SERIES	BODY	ENGINE	TRANS	TRIM	DESCRIPTION
1									SWITCH, Mirror
	5103 845AA	1	2, 6	L	01, 02, 06	EX8	DGZ		[GTB]
		1	2, 6	L	11, 12, 14, 15, 16	EX8	DGZ		[GTB]
		1	2, 6	L	51, 52, 54, 55, 56	EX8	DGZ		[GTB]
		1	3, 7	L	02, 06	EX8	DGZ		[GTB]
		1	3, 7	L	12, 15, 16	EX8	DGZ		[GTB]
	5123 792AA	1	2, 6	L	01, 02, 06	EX8	DGZ		[JPA]
		1	2, 6	L	11, 12, 14, 15, 16	EX8	DGZ		[JPA]
		1	2, 6	L	51, 52, 54, 55, 56	EX8	DGZ		[JPA]
		1	3, 7	L	02, 06	EX8	DGZ		[JPA]
		1	3, 7	L	12, 15, 16	EX8	DGZ		[JPA]
2									SWITCH, Power Window
	5103 856AA	2	2, 6	L	01, 02, 06	EX8	DGZ		
		2	2, 6	L	11, 12, 14, 15, 16	EX8	DGZ		
		2	2, 6	L	51, 52, 54, 55, 56	EX8	DGZ		
		2	3, 7	L	02, 06	EX8	DGZ		
		2	3, 7	L	12, 15, 16	EX8	DGZ		
3									CONNECTOR
	5120 604AA	1	2, 6	L	01, 02, 06	EX8	DGZ		
		1	2, 6	L	11, 12, 14, 15, 16	EX8	DGZ		
		1	2, 6	L	51, 52, 54, 55, 56	EX8	DGZ		
		1	3, 7	L	02, 06	EX8	DGZ		

Refer to Model Legend Information Bookmark

AR = Use as required - = Non illustrated part # = New this model year

March 3, 2006

« RETURN TO GROUP INDEX

Switches - Doors
Figure 008-815

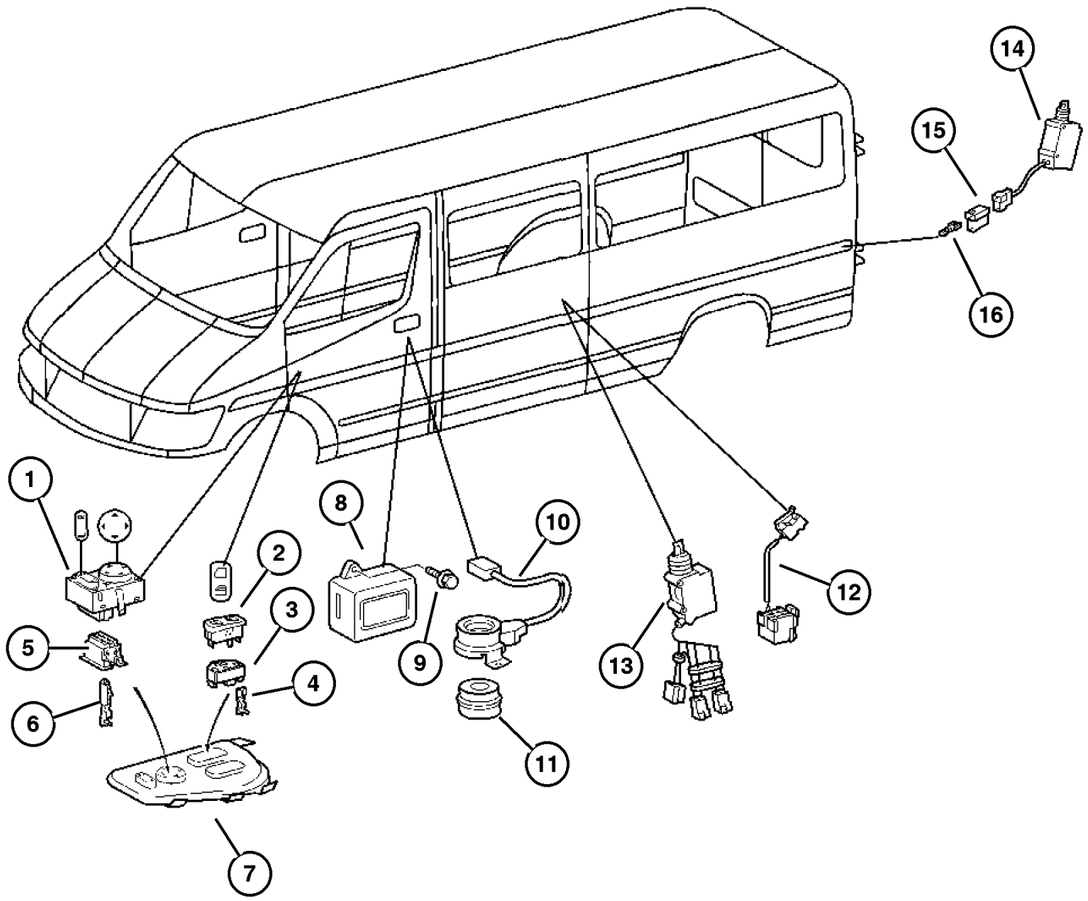

ITEM	PART NUMBER	QTY	LINE	SERIES	BODY	ENGINE	TRANS	TRIM	DESCRIPTION
		1	3, 7	L	12, 15, 16	EX8	DGZ		
4	5133 519AA	99	2, 6	L	01, 02, 06	EX8	DGZ		TERMINAL, Female
		99	2, 6	L	11, 12, 14, 15, 16	EX8	DGZ		
		99	2, 6	L	51, 52, 54, 55, 56	EX8	DGZ		
		99	3, 7	L	02, 06	EX8	DGZ		
		99	3, 7	L	12, 15, 16	EX8	DGZ		
5	5120 782AA	1	2, 6	L	01, 02, 06	EX8	DGZ		CONNECTOR
		1	2, 6	L	11, 12, 14, 15, 16	EX8	DGZ		
		1	2, 6	L	51, 52, 54, 55, 56	EX8	DGZ		
		1	3, 7	L	12, 15, 16	EX8	DGZ		
		1	3, 7	L	02, 06	EX8	DGZ		
6	5103 873AA	99	2, 6	L	01, 02, 06	EX8	DGZ		TERMINAL
		99	2, 6	L	11, 12, 14, 15, 16	EX8	DGZ		
		99	2, 6	L	51, 52, 54, 55, 56	EX8	DGZ		
		99	3, 7	L	02, 06	EX8	DGZ		
		99	3, 7	L	12, 15, 16	EX8	DGZ		
7	5123 790AA	1	2, 6	L	01, 02, 06	EX8	DGZ		BEZEL, Power Window/Door Lock Switch Left
		1	2, 6	L	11, 12, 14, 15, 16	EX8	DGZ		Left

Refer to Model Legend Information Bookmark

AR = Use as required - = Non illustrated part # = New this model year

March 3, 2006

Switches - Doors
Figure 008-815

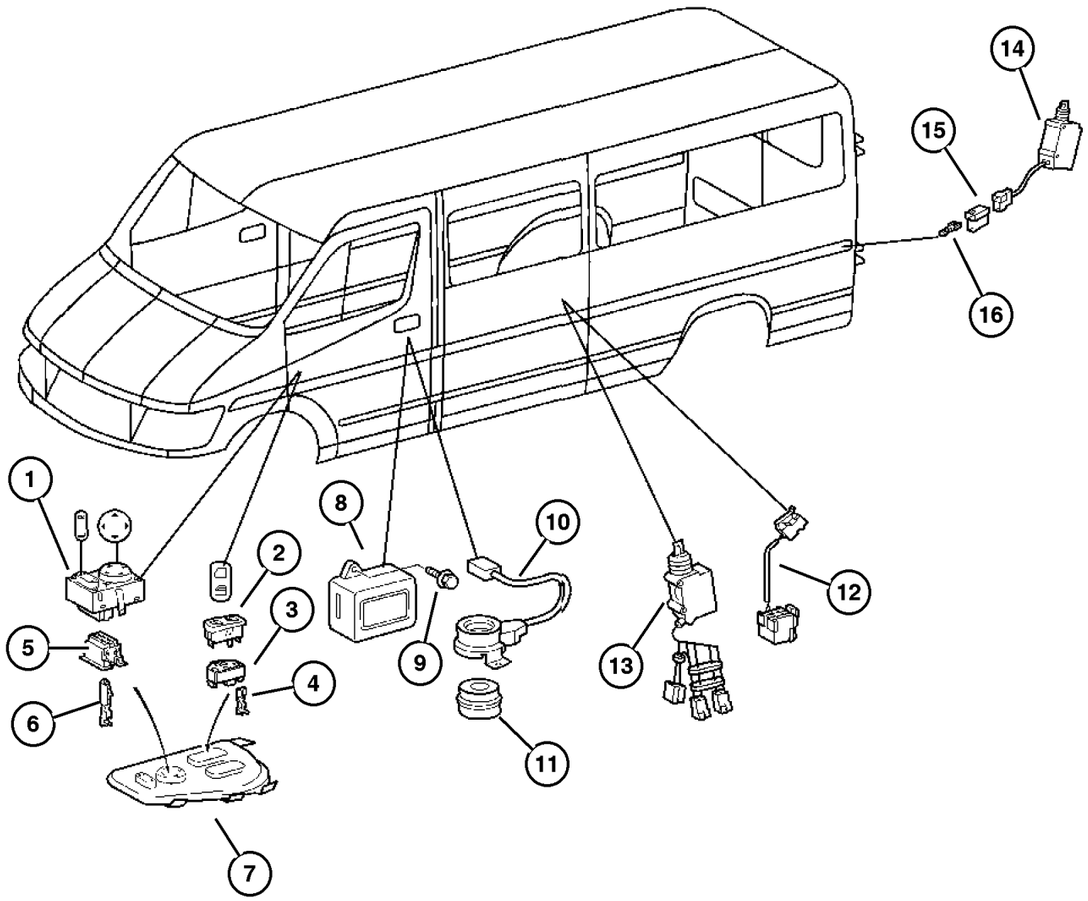

ITEM	PART NUMBER	QTY	LINE	SERIES	BODY	ENGINE	TRANS	TRIM	DESCRIPTION
		1	2, 6	L	51, 52, 54, 55, 56	EX8	DGZ		Left
		1	3, 7	L	02, 06	EX8	DGZ		Left
		1	3, 7	L	12, 15, 16	EX8	DGZ		Left
	5123 791AA	1	2, 6	L	01, 02, 06	EX8	DGZ		Right
		1	2, 6	L	11, 12, 14, 15, 16	EX8	DGZ		Right
		1	2, 6	L	51, 52, 54, 55, 56	EX8	DGZ		Right
		1	3, 7	L	02, 06	EX8	DGZ		Right
		1	3, 7	L	12, 15, 16	EX8	DGZ		Right
8									WSP CONTROL UNIT, Remote Control Key
	5135 344AA	1	2, 6	L	11, 12, 14, 15, 16	EX8	DGZ		
		1	2, 6	L	51, 52, 54, 55, 56	EX8	DGZ		
		1	3, 7	L	02, 06	EX8	DGZ		
		1	3, 7	L	12, 15, 16	EX8	DGZ		
	5135 345AA	1	2, 6	L	11, 12, 14, 15, 16	EX8	DGZ		[JPB]
		1	2, 6	L	51, 52, 54, 55, 56	EX8	DGZ		[JPB]
		1	3, 7	L	02, 06	EX8	DGZ		[JPB]
		1	3, 7	L	12, 15, 16	EX8	DGZ		[JPB]
9									SCREW, Tapping
	6104 574AA	3	2, 6	L	01, 02, 06	EX8	DGZ		
		3	2, 6	L	11, 12, 14, 15, 16	EX8	DGZ		

Refer to Model Legend Information Bookmark

AR = Use as required - = Non illustrated part # = New this model year

March 3, 2006

« RETURN TO GROUP INDEX

Switches - Doors
Figure 008-815

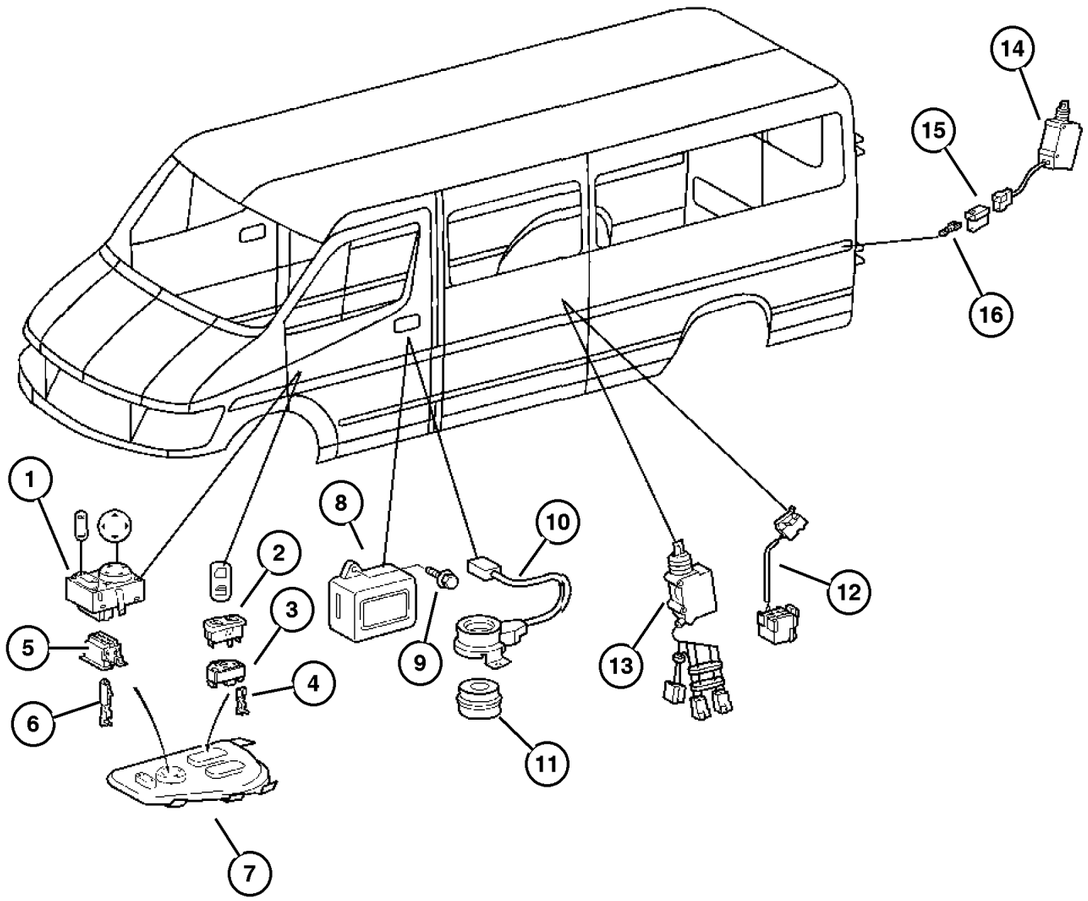

ITEM	PART NUMBER	QTY	LINE	SERIES	BODY	ENGINE	TRANS	TRIM	DESCRIPTION
		3	2, 6	L	51, 52, 54, 55, 56	EX8	DGZ		
		3	3, 7	L	02, 06	EX8	DGZ		
		3	3, 7	L	12, 15, 16	EX8	DGZ		
10	5120 812AA	1	2, 6	L	11, 12, 14, 15, 16	EX8	DGZ		TRANSPONDER, Steering Wheel
		1	2, 6	L	51, 52, 54, 55, 56	EX8	DGZ		
		1	2, 6	L	01, 02, 06	EX8	DGZ		
		1	3, 7	L	12, 15, 16	EX8	DGZ		
11	5104 593AA	1	3, 7	L	02, 06	EX8	DGZ		RING
		1	2, 6	L	11, 12, 14, 15, 16	EX8	DGZ		
		1	2, 6	L	51, 52, 54, 55, 56	EX8	DGZ		
		1	2, 6	L	01, 02, 06	EX8	DGZ		
		1	3, 7	L	02, 06	EX8	DGZ		
		1	3, 7	L	12, 15, 16	EX8	DGZ		
12	5133 527AA	1	2, 6	L	11, 12, 14, 15, 16	EX8	DGZ		SWITCH, Door Lock Right
		1	2, 6	L	51, 52, 54, 55, 56	EX8	DGZ		Right
		1	3, 7	L	12, 15, 16	EX8	DGZ		Right
	5133 999AA	1	2, 6	L	11, 12, 14, 15, 16	EX8	DGZ		Left
		1	2, 6	L	51, 52, 54, 55, 56	EX8	DGZ		Left

Refer to Model Legend Information Bookmark

AR = Use as required - = Non illustrated part # = New this model year

March 3, 2006

« RETURN TO GROUP INDEX

Switches - Doors
Figure 008-815

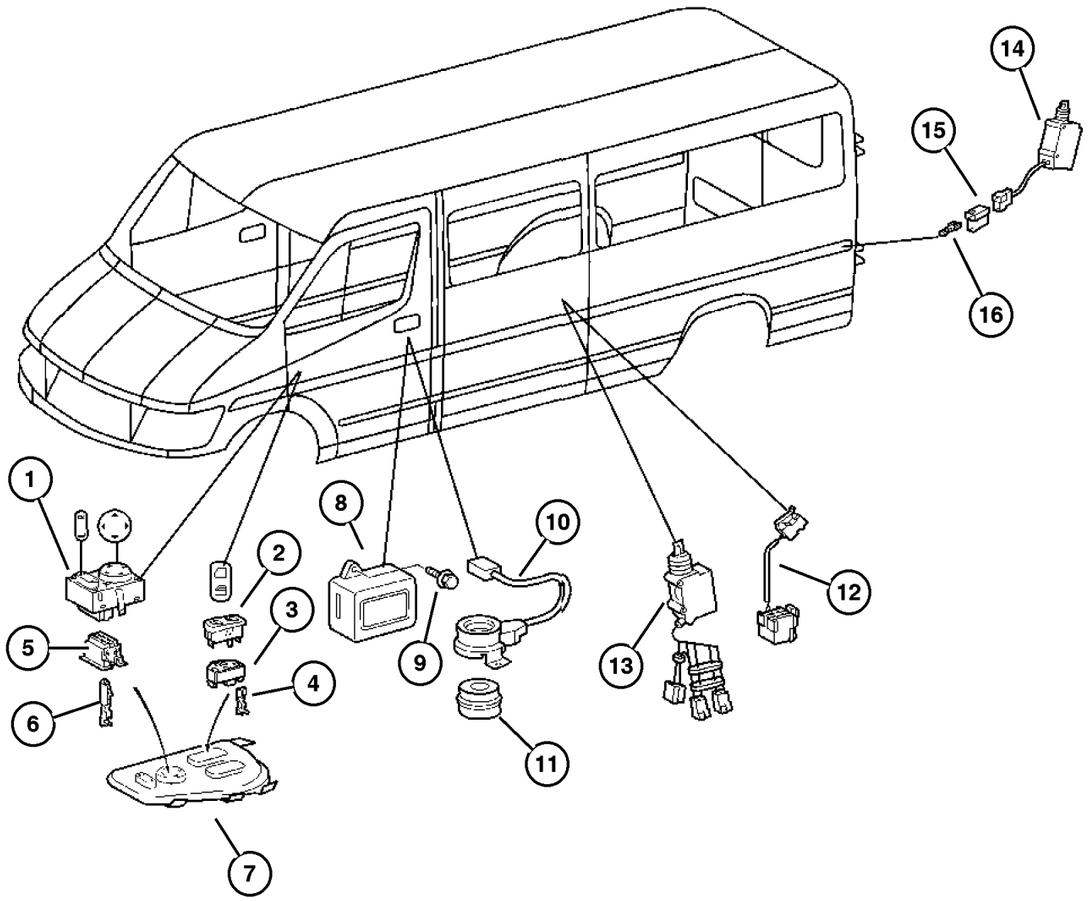

ITEM	PART NUMBER	QTY	LINE	SERIES	BODY	ENGINE	TRANS	TRIM	DESCRIPTION
		1	3, 7	L	12, 15, 16	EX8	DGZ		Left
13									ACTUATOR, Power Door Lock
	5103 756AA	1	2, 6	L	11, 12, 14, 15, 16	EX8	DGZ		
		1	2, 6	L	51, 52, 54, 55, 56	EX8	DGZ		
		1	3, 7	L	12, 15, 16	EX8	DGZ		
14									ACTUATOR, Power Door Lock
	5133 998AA	1	2, 6	L	11, 12, 14, 15, 16	EX8	DGZ		
		1	2, 6	L	51, 52, 54, 55, 56	EX8	DGZ		
		1	3, 7	L	12, 15, 16	EX8	DGZ		
15									INSULATOR, 2 Way Female
	5103 754AA	1	2, 6	L	01, 02, 06	EX8	DGZ		
		1	2, 6	L	11, 12, 14, 15, 16	EX8	DGZ		
		1	2, 6	L	51, 52, 54, 55, 56	EX8	DGZ		
		2	3, 7	L	02, 06	EX8	DGZ		
		2	3, 7	L	12, 15, 16	EX8	DGZ		
16									TERMINAL, Female
	5133 395AA	99	2, 6	L	01, 02, 06	EX8	DGZ		
		99	2, 6	L	11, 12, 14, 15, 16	EX8	DGZ		
		99	2, 6	L	51, 52, 54, 55, 56	EX8	DGZ		
		99	3, 7	L	02, 06	EX8	DGZ		
		99	3, 7	L	12, 15, 16	EX8	DGZ		

Refer to Model Legend Information Bookmark

AR = Use as required - = Non illustrated part # = New this model year

March 3, 2006

« RETURN TO GROUP INDEX

Switch Brake and Clutch
Figure 008-820

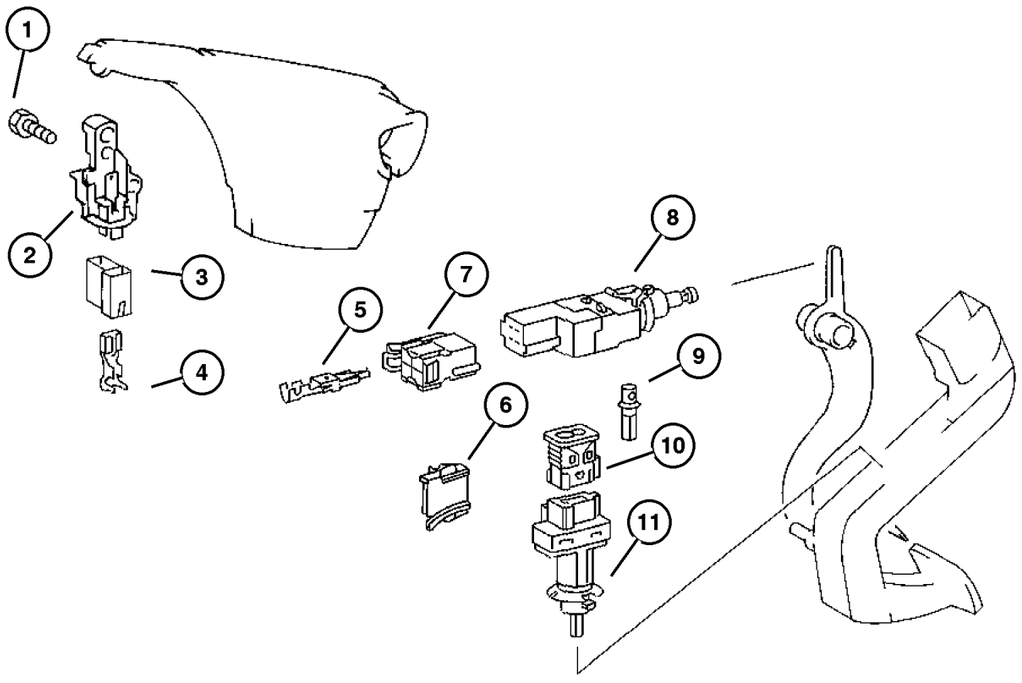

ITEM	PART NUMBER	QTY	LINE	SERIES	BODY	ENGINE	TRANS	TRIM	DESCRIPTION
1									SCREW
	5126 147AA	1	2, 6	L	01, 02, 06	EX8	DGZ		
		1	2, 6	L	11, 12, 14, 15, 16	EX8	DGZ		
		1	2, 6	L	51, 52, 54, 55, 56	EX8	DGZ		
		1	3, 7	L	02, 06	EX8	DGZ		
		1	3, 7	L	12, 15, 16	EX8	DGZ		
2									SWITCH, Parking Brake
	5103 540AA	1	2, 6	L	01, 02, 06	EX8	DGZ		
		1	2, 6	L	11, 12, 14, 15, 16	EX8	DGZ		
		1	2, 6	L	51, 52, 54, 55, 56	EX8	DGZ		
		1	3, 7	L	02, 06	EX8	DGZ		
		1	3, 7	L	12, 15, 16	EX8	DGZ		
3									INSULATOR, 2 Way Female
	5103 754AA	1	2, 6	L	01, 02, 06	EX8	DGZ		
		1	2, 6	L	11, 12, 14, 15, 16	EX8	DGZ		
		1	2, 6	L	51, 52, 54, 55, 56	EX8	DGZ		
		1	3, 7	L	02, 06	EX8	DGZ		
		1	3, 7	L	12, 15, 16	EX8	DGZ		
4									TERMINAL, Female
	5114 451AA	99	2, 6	L	01, 02, 06	EX8	DGZ		
		99	2, 6	L	11, 12, 14, 15, 16	EX8	DGZ		
		99	3, 7	L	02, 06	EX8	DGZ		
		99	3, 7	L	12, 15, 16	EX8	DGZ		

Refer to Model Legend Information Bookmark

AR = Use as required - = Non illustrated part # = New this model year

March 3, 2006

« RETURN TO GROUP INDEX

»

Switch Brake and Clutch
Figure 008-820

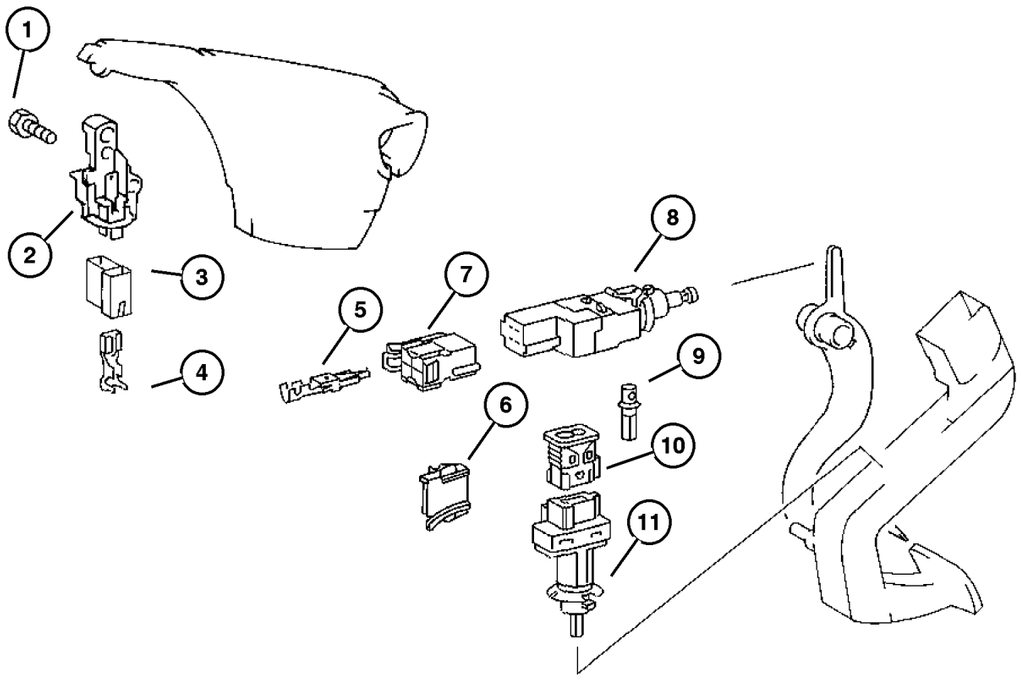

ITEM	PART NUMBER	QTY	LINE	SERIES	BODY	ENGINE	TRANS	TRIM	DESCRIPTION
		99	2, 6	L	51, 52, 54, 55, 56	EX8	DGZ		
5									TERMINAL
	5103 881AA	99	2, 6	L	01, 02, 06	EX8	DGZ		
		99	2, 6	L	11, 12, 14, 15, 16	EX8	DGZ		
		99	2, 6	L	51, 52, 54, 55, 56	EX8	DGZ		
		99	3, 7	L	02, 06	EX8	DGZ		
		99	3, 7	L	12, 15, 16	EX8	DGZ		
6									CONNECTOR
	5120 772AA	1	2, 6	L	01, 02, 06	EX8	DGZ		
		1	2, 6	L	11, 12, 14, 15, 16	EX8	DGZ		
		1	2, 6	L	51, 52, 54, 55, 56	EX8	DGZ		
		1	3, 7	L	02, 06	EX8	DGZ		
		1	3, 7	L	12, 15, 16	EX8	DGZ		
7									INSULATOR, 4 Way
	5120 776AA	1	2, 6	L	01, 02, 06	EX8	DGZ		
		1	2, 6	L	11, 12, 14, 15, 16	EX8	DGZ		
		1	2, 6	L	51, 52, 54, 55, 56	EX8	DGZ		
		1	3, 7	L	02, 06	EX8	DGZ		
		1	3, 7	L	12, 15, 16	EX8	DGZ		
8									SWITCH, Stop Lamp
	5101 496AB	1	2, 6	L	01, 02, 06	EX8	DGZ		
		1	2, 6	L	11, 12, 14, 15, 16	EX8	DGZ		

Refer to Model Legend Information Bookmark

Switch Brake and Clutch
Figure 008-820

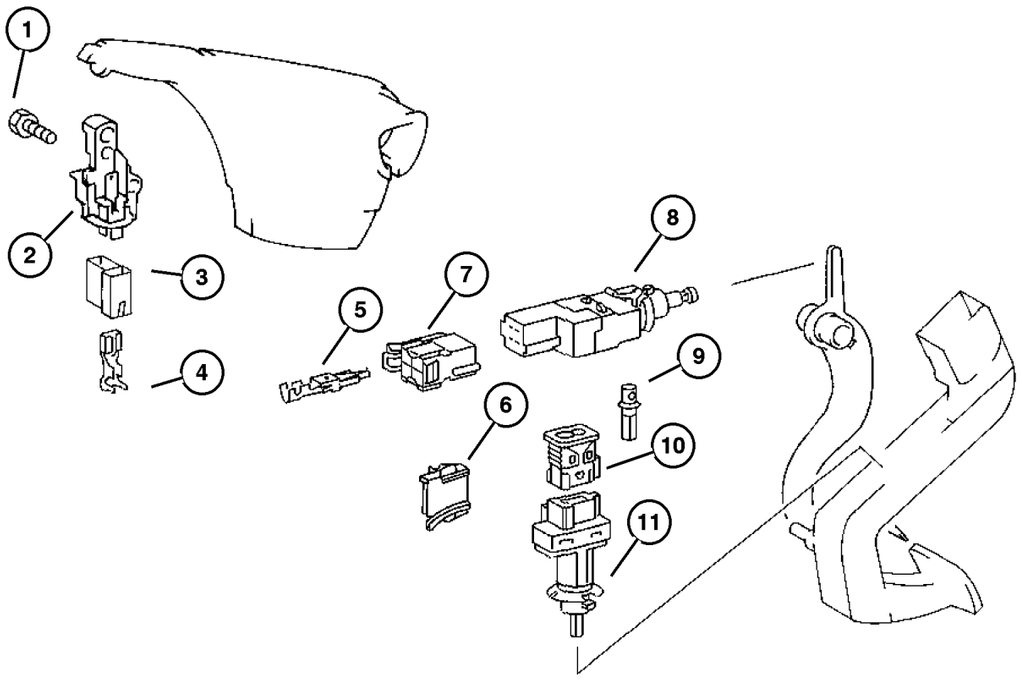

ITEM	PART NUMBER	QTY	LINE	SERIES	BODY	ENGINE	TRANS	TRIM	DESCRIPTION
		1	2, 6	L	51, 52, 54, 55, 56	EX8	DGZ		
		1	3, 7	L	02, 06	EX8	DGZ		
		1	3, 7	L	12, 15, 16	EX8	DGZ		
	5103 748AA	1	2, 6	L	01, 02, 06	EX8	DGZ		[BNB]
		1	2, 6	L	11, 12, 14, 15, 16	EX8	DGZ		[BNB]
		1	2, 6	L	51, 52, 54, 55, 56	EX8	DGZ		
9	5133 478AA	99	2, 6	L	01, 02, 06	EX8	DGZ		TERMINAL
		99	2, 6	L	11, 12, 14, 15, 16	EX8	DGZ		
		99	2, 6	L	51, 52, 54, 55, 56	EX8	DGZ		
		99	3, 7	L	02, 06	EX8	DGZ		
		99	3, 7	L	12, 15, 16	EX8	DGZ		
10	5120 725AA	1	2, 6	L	01, 02, 06	EX8	DGZ		INSULATOR, 2 Way Female
		1	2, 6	L	11, 12, 14, 15, 16	EX8	DGZ		
		1	2, 6	L	51, 52, 54, 55, 56	EX8	DGZ		
		1	3, 7	L	02, 06	EX8	DGZ		
		1	3, 7	L	12, 15, 16	EX8	DGZ		
11	5098 407AA	1	2, 6	L	01, 02, 06	EX8	DGZ		SWITCH, Clutch
		1	2, 6	L	11, 12, 14, 15, 16	EX8	DGZ		

Refer to Model Legend Information Bookmark

AR = Use as required - = Non illustrated part # = New this model year

March 3, 2006

« RETURN TO GROUP INDEX

Switch Brake and Clutch
Figure 008-820

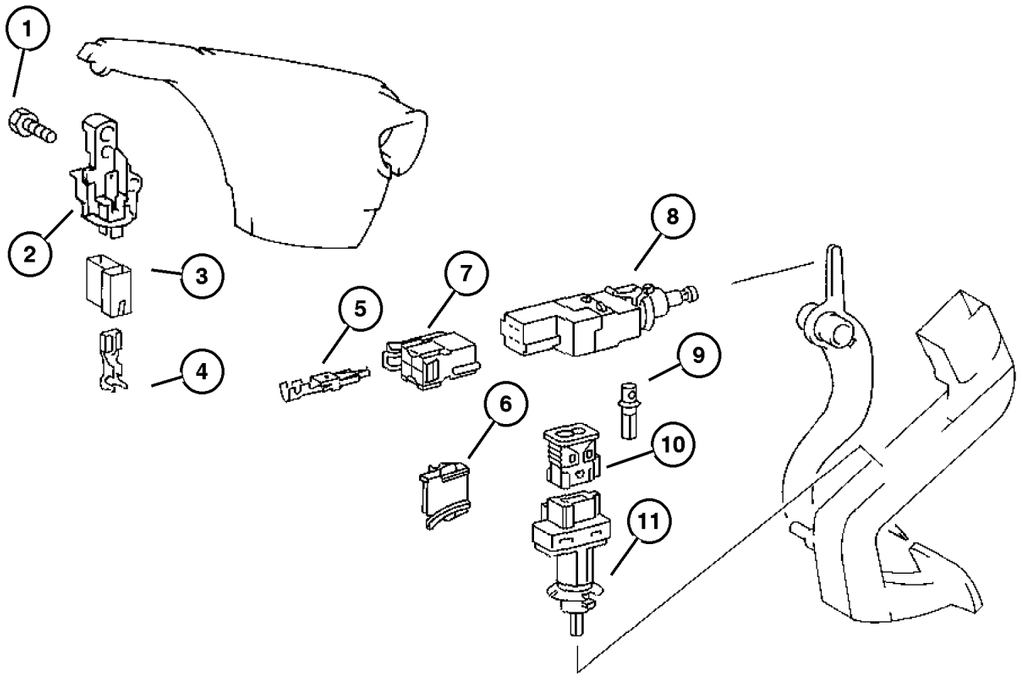

ITEM	PART NUMBER	QTY	LINE	SERIES	BODY	ENGINE	TRANS	TRIM	DESCRIPTION
		1	2, 6	L	51, 52, 54, 55, 56	EX8	DGZ		
		1	3, 7	L	02, 06	EX8	DGZ		
		1	3, 7	L	12, 15, 16	EX8	DGZ		

Refer to Model Legend Information Bookmark

Horns & Alarm
Figure 008-905

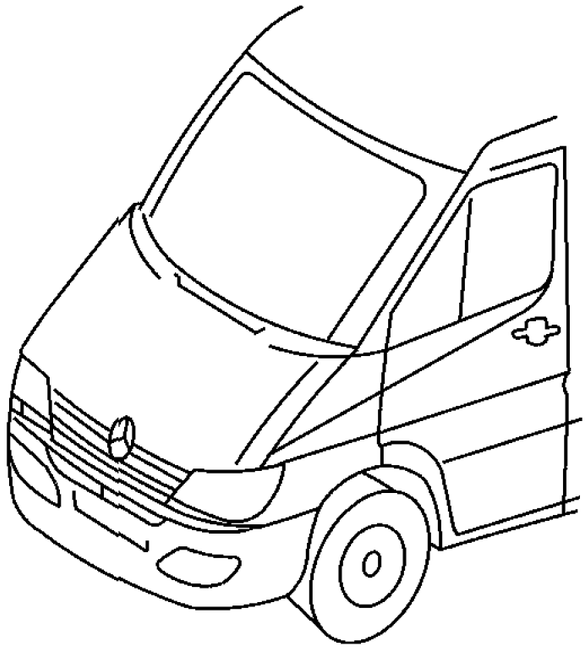

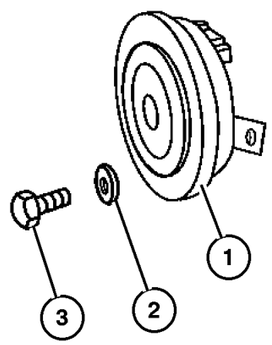

ITEM	PART NUMBER	QTY	LINE	SERIES	BODY	ENGINE	TRANS	TRIM	DESCRIPTION
1									HORN
	5120 370AA	1	2, 6	L	01, 02, 06	EX8	DGZ		
		1	2, 6	L	11, 12, 14, 15, 16	EX8	DGZ		
		1	2, 6	L	51, 52, 54, 55, 56	EX8	DGZ		
		1	3, 7	L	02, 06	EX8	DGZ		
		1	3, 7	L	12, 15, 16	EX8	DGZ		
2									LOCK WASHER
	5104 669AA	1	2, 6	L	01, 02, 06	EX8	DGZ		
		1	2, 6	L	11, 12, 14, 15, 16	EX8	DGZ		
		1	2, 6	L	51, 52, 54, 55, 56	EX8	DGZ		
		1	3, 7	L	02, 06	EX8	DGZ		
		1	3, 7	L	12, 15, 16	EX8	DGZ		
3									SCREW
	6104 022AB	1	2, 6	L	01, 02, 06	EX8	DGZ		
		1	2, 6	L	11, 12, 14, 15, 16	EX8	DGZ		
		1	2, 6	L	51, 52, 54, 55, 56	EX8	DGZ		
		1	3, 7	L	02, 06	EX8	DGZ		
		1	3, 7	L	12, 15, 16	EX8	DGZ		

Refer to Model Legend Information Bookmark

AR = Use as required - = Non illustrated part # = New this model year

March 3, 2006

« RETURN TO GROUP INDEX

Battery Tray & Cables
Figure 008-1005

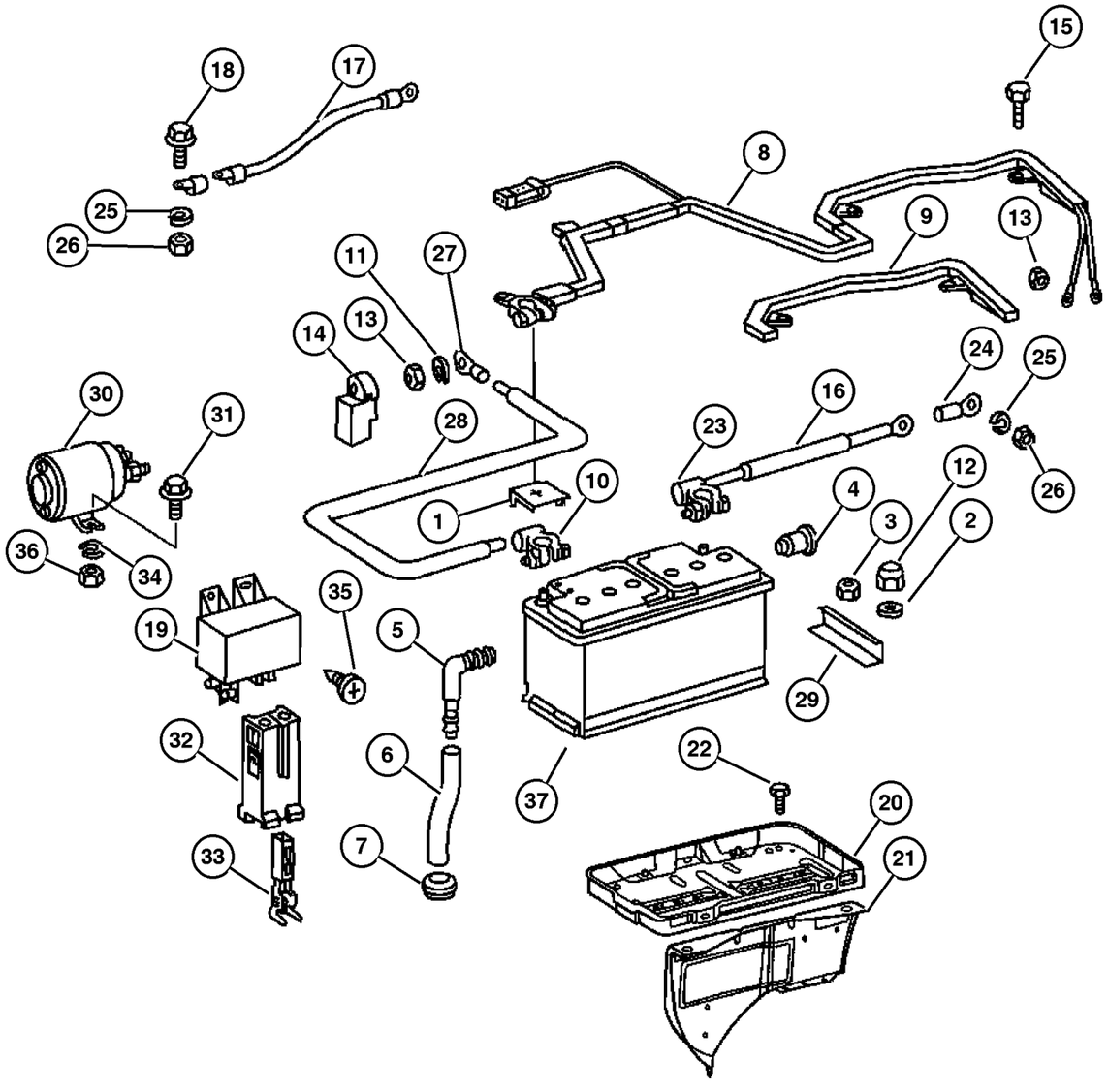

ITEM	PART NUMBER	QTY	LINE	SERIES	BODY	ENGINE	TRANS	TRIM	DESCRIPTION
1									COVER, Battery Terminal
	5098 850AA	1	2, 6	L	01, 02, 06	EX8	DGZ		
		1	2, 6	L	11, 12, 14, 15, 16	EX8	DGZ		
		1	2, 6	L	51, 52, 54, 55, 56	EX8	DGZ		
		1	3, 7	L	02, 06	EX8	DGZ		
		1	3, 7	L	12, 15, 16	EX8	DGZ		
2									WASHER, Flat
	5104 612AA	2	2, 6	L	01, 02, 06	EX8	DGZ		
		2	2, 6	L	11, 12, 14, 15, 16	EX8	DGZ		
		2	2, 6	L	51, 52, 54, 55, 56	EX8	DGZ		
		99	3, 7	L	02, 06	EX8	DGZ		
		99	3, 7	L	12, 15, 16	EX8	DGZ		
3									NUT, Hex, M6, (NOT SERVICED) (Not Serviced)
4									PLUG
	5099 303AA	1	2, 6	L	01, 02, 06	EX8	DGZ		
		1	2, 6	L	11, 12, 14, 15, 16	EX8	DGZ		
		1	2, 6	L	51, 52, 54, 55, 56	EX8	DGZ		
		1	3, 7	L	02, 06	EX8	DGZ		
		1	3, 7	L	12, 15, 16	EX8	DGZ		
5									ELBOW, Male Adapter
	5125 802AA	1	2, 6	L	01, 02, 06	EX8	DGZ		
		1	2, 6	L	11, 12, 14, 15, 16	EX8	DGZ		

Refer to Model Legend Information Bookmark

Battery Tray & Cables
Figure 008-1005

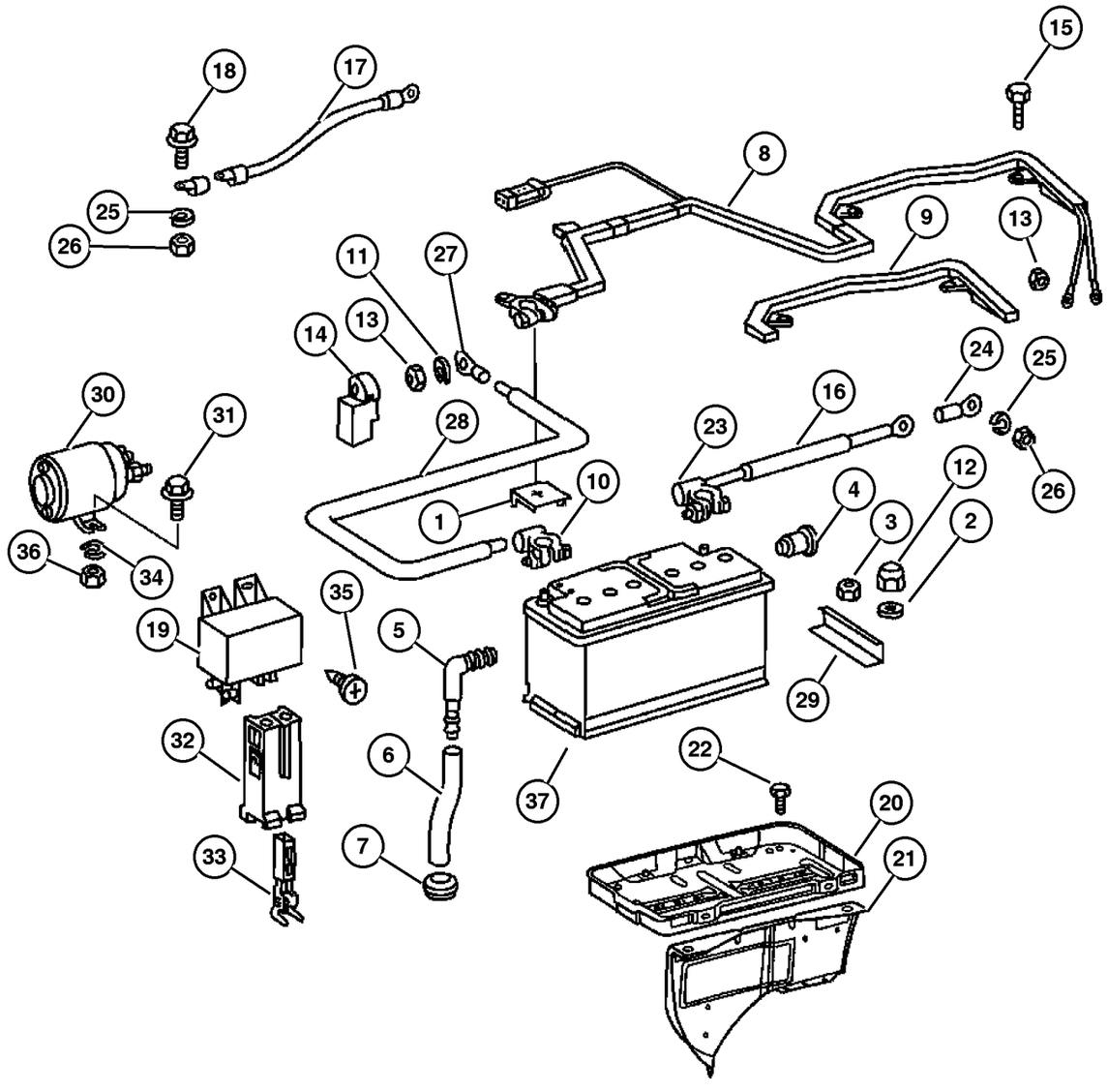

ITEM	PART NUMBER	QTY	LINE	SERIES	BODY	ENGINE	TRANS	TRIM	DESCRIPTION
		1	2, 6	L	51, 52, 54, 55, 56	EX8	DGZ		
		1	3, 7	L	02, 06	EX8	DGZ		
		1	3, 7	L	12, 15, 16	EX8	DGZ		
6	5125 962AA	40	2, 6	L	01, 02, 06	EX8	DGZ		HOSE, Battery Vent
		40	2, 6	L	11, 12, 14, 15, 16	EX8	DGZ		
		40	2, 6	L	51, 52, 54, 55, 56	EX8	DGZ		
		40	3, 7	L	02, 06	EX8	DGZ		
		40	3, 7	L	12, 15, 16	EX8	DGZ		
7	5125 940AA	1	2, 6	L	01, 02, 06	EX8	DGZ		GROMMET, Floor
		1	2, 6	L	11, 12, 14, 15, 16	EX8	DGZ		
		1	2, 6	L	51, 52, 54, 55, 56	EX8	DGZ		
		1	3, 7	L	02, 06	EX8	DGZ		
		1	3, 7	L	12, 15, 16	EX8	DGZ		
8	5133 949AA	900	2, 6	L	01, 02, 06	EX8	DGZ		CABLE, Battery Positive
		900	2, 6	L	11, 12, 14, 15, 16	EX8	DGZ		
		900	2, 6	L	51, 52, 54, 55, 56	EX8	DGZ		
		900	3, 7	L	02, 06	EX8	DGZ		
		900	3, 7	L	12, 15, 16	EX8	DGZ		
9	5120 950AA	1	2, 6	L	01, 02, 06	EX8	DGZ		COVER, Wiring Protector

Refer to Model Legend Information Bookmark

Battery Tray & Cables
Figure 008-1005

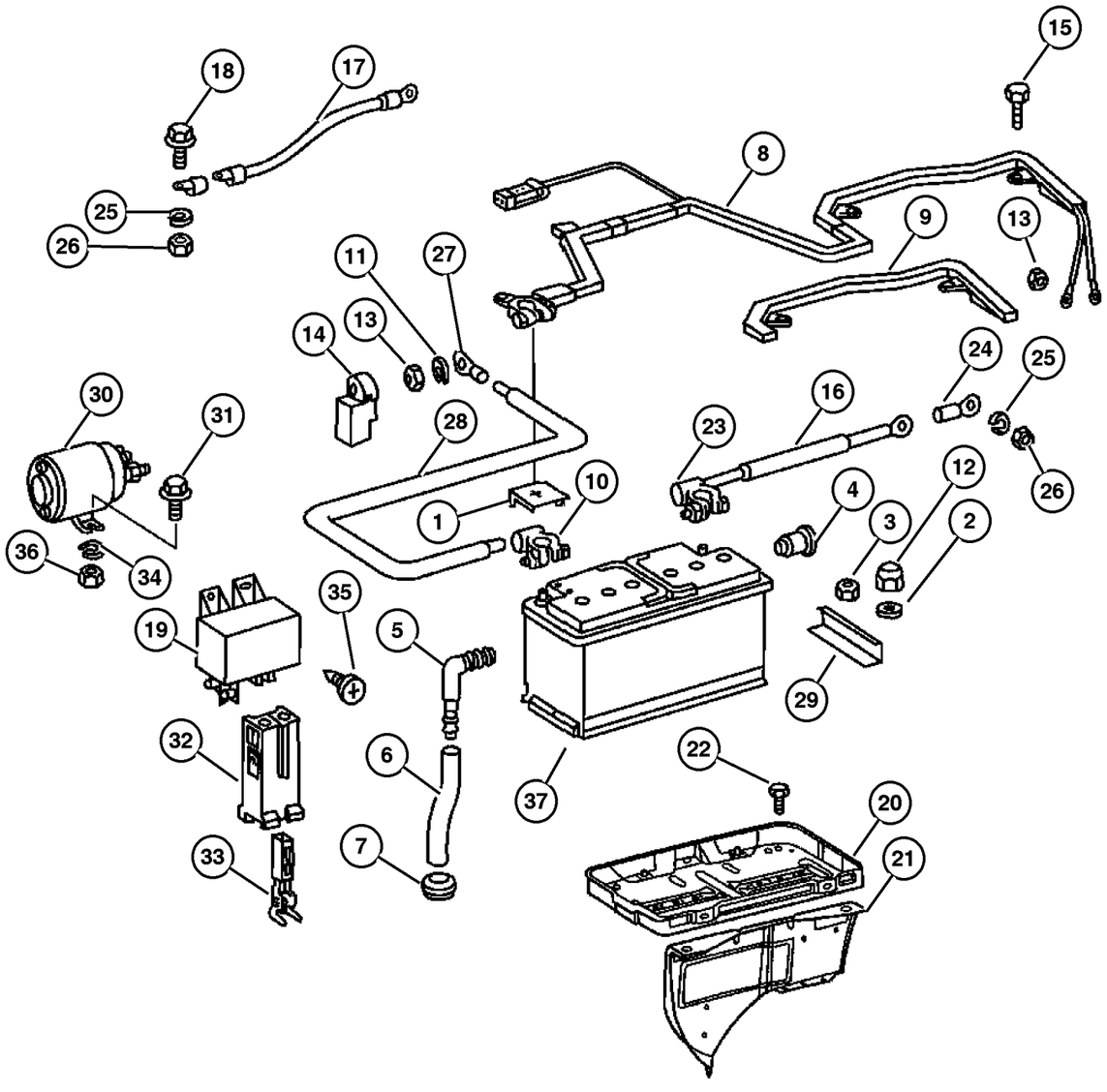

ITEM	PART NUMBER	QTY	LINE	SERIES	BODY	ENGINE	TRANS	TRIM	DESCRIPTION
		1	2, 6	L	11, 12, 14, 15, 16	EX8	DGZ		
		1	2, 6	L	51, 52, 54, 55, 56	EX8	DGZ		
		1	3, 7	L	02, 06	EX8	DGZ		
		1	3, 7	L	12, 15, 16	EX8	DGZ		
10									TERMINAL, Battery
	5120 949AA	1	2, 6	L	01, 02, 06	EX8	DGZ		
		1	2, 6	L	11, 12, 14, 15, 16	EX8	DGZ		
		1	2, 6	L	51, 52, 54, 55, 56	EX8	DGZ		
		1	3, 7	L	02, 06	EX8	DGZ		
		1	3, 7	L	12, 15, 16	EX8	DGZ		
11									LOCK WASHER
	5104 669AA	1	2, 6	L	01, 02, 06	EX8	DGZ		
		1	2, 6	L	11, 12, 14, 15, 16	EX8	DGZ		
		1	2, 6	L	51, 52, 54, 55, 56	EX8	DGZ		
		1	3, 7	L	02, 06	EX8	DGZ		
		1	3, 7	L	12, 15, 16	EX8	DGZ		
12									NUT
	5133 943AA	2	2, 6	L	01, 02, 06	EX8	DGZ		
		2	2, 6	L	11, 12, 14, 15, 16	EX8	DGZ		
		2	2, 6	L	51, 52, 54, 55, 56	EX8	DGZ		
		99	3, 7	L	02, 06	EX8	DGZ		
		99	3, 7	L	12, 15, 16	EX8	DGZ		
13									NUT, M8

Refer to Model Legend Information Bookmark

AR = Use as required - = Non illustrated part # = New this model year

March 3, 2006

« RETURN TO GROUP INDEX

« »

Battery Tray & Cables
Figure 008-1005

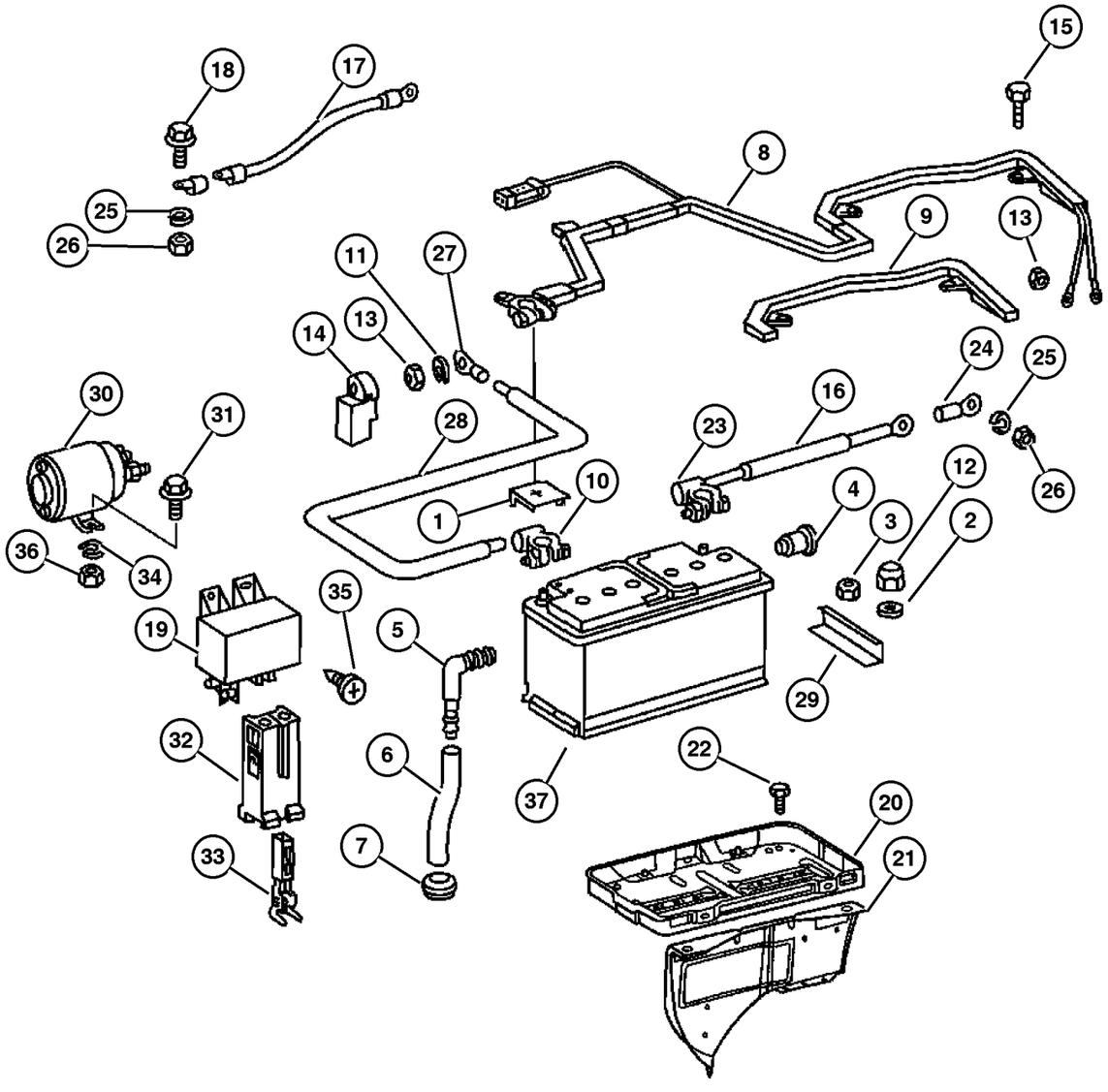

ITEM	PART NUMBER	QTY	LINE	SERIES	BODY	ENGINE	TRANS	TRIM	DESCRIPTION
	6104 709AA	1	2, 6	L	01, 02, 06	EX8	DGZ		
		1	2, 6	L	11, 12, 14, 15, 16	EX8	DGZ		
		1	2, 6	L	51, 52, 54, 55, 56	EX8	DGZ		
		1	3, 7	L	02, 06	EX8	DGZ		
		1	3, 7	L	12, 15, 16	EX8	DGZ		
14									COVER, Battery Terminal
	5120 925AA	1	2, 6	L	01, 02, 06	EX8	DGZ		
		1	2, 6	L	11, 12, 14, 15, 16	EX8	DGZ		
		1	2, 6	L	51, 52, 54, 55, 56	EX8	DGZ		
		1	3, 7	L	02, 06	EX8	DGZ		
		1	3, 7	L	12, 15, 16	EX8	DGZ		
15									SCREW
	5073 824AA	2	2, 6	L	01, 02, 06	EX8	DGZ		
		2	2, 6	L	11, 12, 14, 15, 16	EX8	DGZ		
		2	2, 6	L	51, 52, 54, 55, 56	EX8	DGZ		
		2	3, 7	L	02, 06	EX8	DGZ		
		2	3, 7	L	12, 15, 16	EX8	DGZ		
16									CABLE, Battery Negative
	5120 219AA	1	2, 6	L	01, 02, 06	EX8	DGZ		
		1	2, 6	L	11, 12, 14, 15, 16	EX8	DGZ		
		1	2, 6	L	51, 52, 54, 55, 56	EX8	DGZ		
		1	3, 7	L	02, 06	EX8	DGZ		

Refer to Model Legend Information Bookmark

AR = Use as required - = Non illustrated part # = New this model year

March 3, 2006

« RETURN TO GROUP INDEX

Battery Tray & Cables
Figure 008-1005

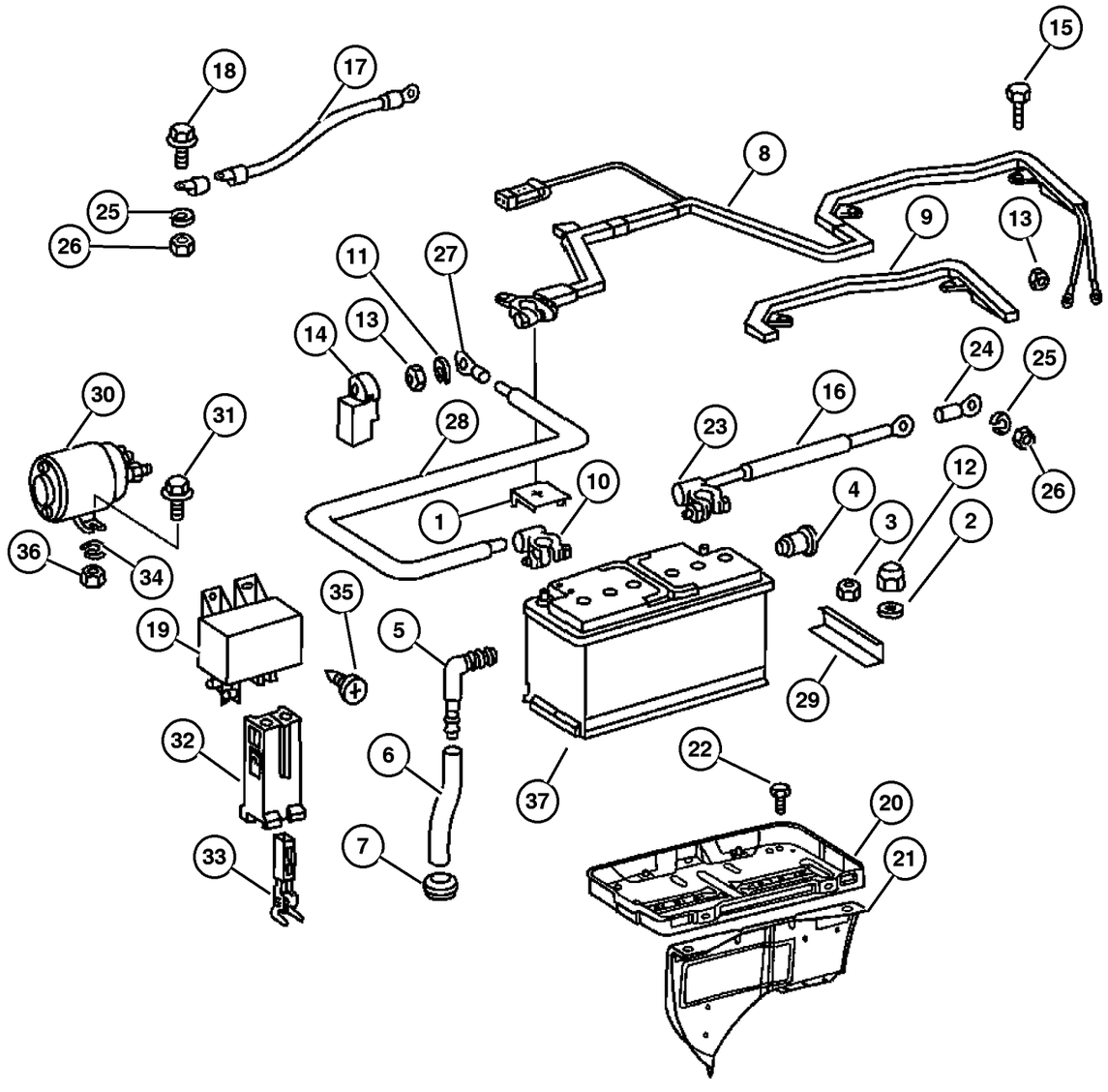

ITEM	PART NUMBER	QTY	LINE	SERIES	BODY	ENGINE	TRANS	TRIM	DESCRIPTION
		1	3, 7	L	12, 15, 16	EX8	DGZ		
	5133 954AA	100	2, 6	L	01, 02, 06	EX8	DGZ		[BC1]
		100	2, 6	L	11, 12, 14, 15, 16	EX8	DGZ		[BC1]
		100	2, 6	L	51, 52, 54, 55, 56	EX8	DGZ		[BC1]
		100	3, 7	L	02, 06	EX8	DGZ		[BC1]
		100	3, 7	L	12, 15, 16	EX8	DGZ		[BC1]
17									STRAP, Ground
	5120 226AA	1	2, 6	L	01, 02, 06	EX8	DGZ		
		1	2, 6	L	11, 12, 14, 15, 16	EX8	DGZ		
		1	2, 6	L	51, 52, 54, 55, 56	EX8	DGZ		
		1	3, 7	L	02, 06	EX8	DGZ		
		1	3, 7	L	12, 15, 16	EX8	DGZ		
18									BOLT
	5126 259AA	1	2, 6	L	01, 02, 06	EX8	DGZ		Ground cable to firewall
		1	2, 6	L	11, 12, 14, 15, 16	EX8	DGZ		Ground cable to firewall
		1	2, 6	L	51, 52, 54, 55, 56	EX8	DGZ		Ground cable to firewall
		1	3, 7	L	02, 06	EX8	DGZ		Ground cable to firewall
		1	3, 7	L	12, 15, 16	EX8	DGZ		Ground cable to firewall
	5126 260AA	1	2, 6	L	01, 02, 06	EX8	DGZ		Ground cable to body
		1	2, 6	L	11, 12, 14, 15, 16	EX8	DGZ		Ground cable to body
		1	2, 6	L	51, 52, 54, 55, 56	EX8	DGZ		Ground cable to body

Refer to Model Legend Information Bookmark

AR = Use as required - = Non illustrated part # = New this model year

March 3, 2006

« RETURN TO GROUP INDEX

Battery Tray & Cables
Figure 008-1005

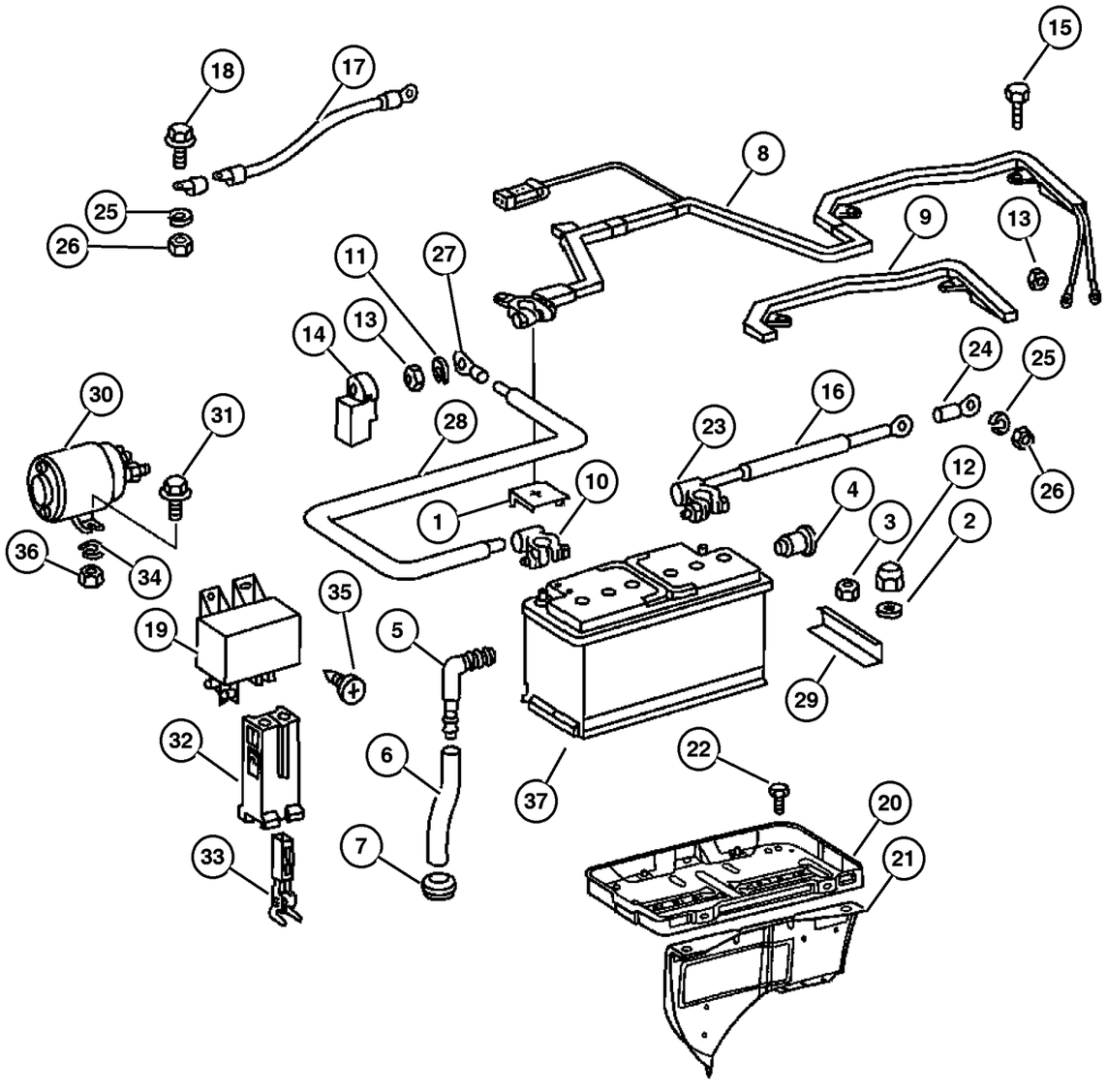

ITEM	PART NUMBER	QTY	LINE	SERIES	BODY	ENGINE	TRANS	TRIM	DESCRIPTION
		1	3, 7	L	02, 06	EX8	DGZ		Ground cable to body
		1	3, 7	L	12, 15, 16	EX8	DGZ		Ground cable to body
19									RELAY
	5120 361AA	1	2, 6	L	01, 02, 06	EX8	DGZ		
		1	2, 6	L	11, 12, 14, 15, 16	EX8	DGZ		
		1	2, 6	L	51, 52, 54, 55, 56	EX8	DGZ		
		1	3, 7	L	02, 06	EX8	DGZ		
		1	3, 7	L	12, 15, 16	EX8	DGZ		
20									TRAY, Battery
	5122 170AA	1	2, 6	L	01, 02, 06	EX8	DGZ		[BC1]
		1	2, 6	L	11, 12, 14, 15, 16	EX8	DGZ		[BC1]
		1	2, 6	L	51, 52, 54, 55, 56	EX8	DGZ		[BC1]
		1	3, 7	L	02, 06	EX8	DGZ		[BC1]
		1	3, 7	L	12, 15, 16	EX8	DGZ		[BC1]
	5125 223AA	1	2, 6	L	01, 02, 06	EX8	DGZ		
		1	2, 6	L	11, 12, 14, 15, 16	EX8	DGZ		
		1	2, 6	L	51, 52, 54, 55, 56	EX8	DGZ		
		1	3, 7	L	02, 06	EX8	DGZ		
		1	3, 7	L	12, 15, 16	EX8	DGZ		
21									BRACKET, Battery Tray
	5104 157AA	1	2, 6	L	01, 02, 06	EX8	DGZ		
		1	2, 6	L	11, 12, 14, 15, 16	EX8	DGZ		

Refer to Model Legend Information Bookmark

AR = Use as required - = Non illustrated part # = New this model year

March 3, 2006

« RETURN TO GROUP INDEX

« »

Battery Tray & Cables
Figure 008-1005

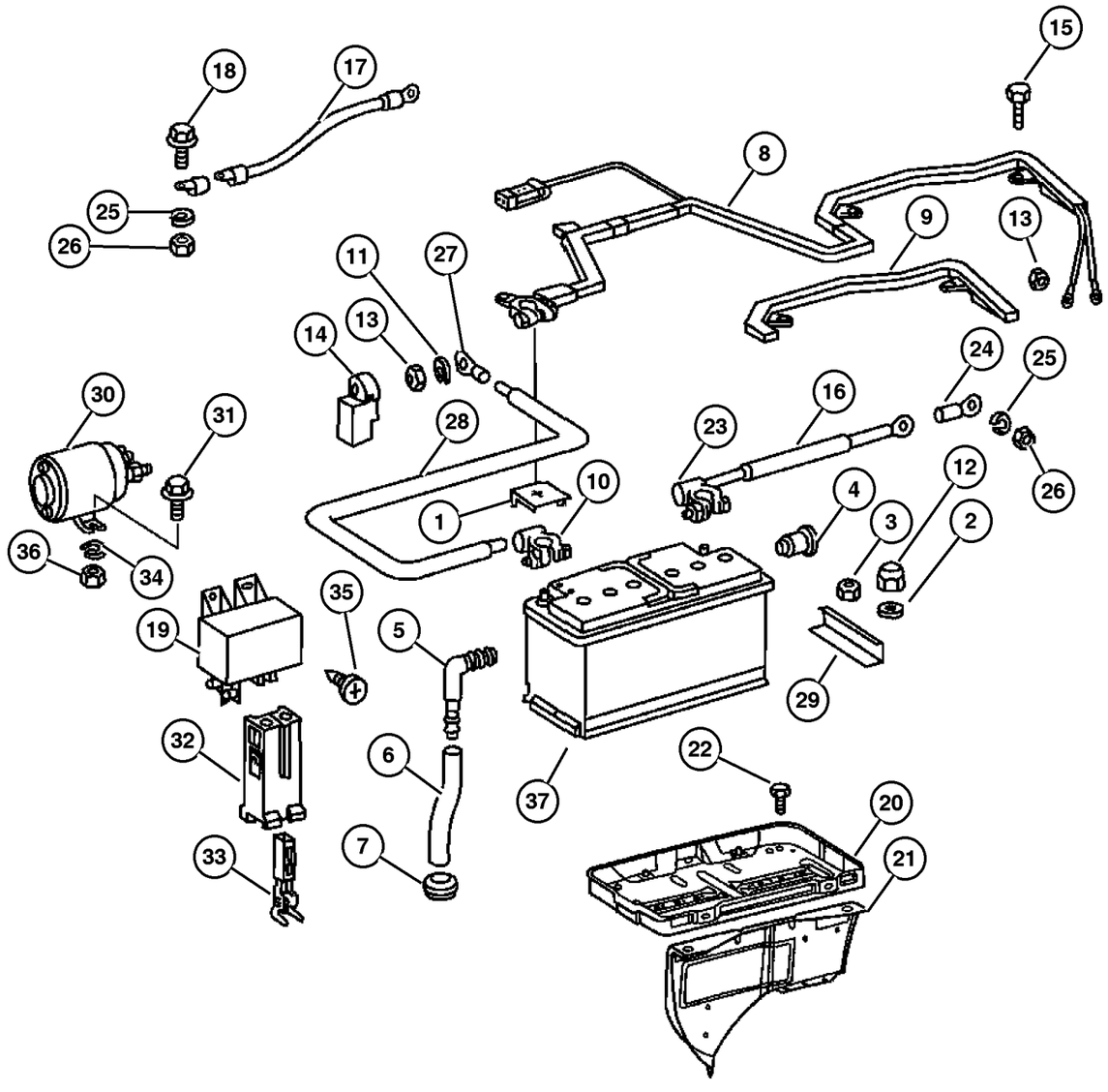

ITEM	PART NUMBER	QTY	LINE	SERIES	BODY	ENGINE	TRANS	TRIM	DESCRIPTION
		1	2, 6	L	51, 52, 54, 55, 56	EX8	DGZ		
		1	3, 7	L	02, 06	EX8	DGZ		
		1	3, 7	L	12, 15, 16	EX8	DGZ		
22	5126 227AA	2	2, 6	L	01, 02, 06	EX8	DGZ		BOLT, Hex Head
		2	2, 6	L	11, 12, 14, 15, 16	EX8	DGZ		
		2	2, 6	L	51, 52, 54, 55, 56	EX8	DGZ		
		2	3, 7	L	02, 06	EX8	DGZ		
		2	3, 7	L	12, 15, 16	EX8	DGZ		
23	5133 952AA	1	2, 6	L	01, 02, 06	EX8	DGZ		TERMINAL, Battery
		1	2, 6	L	11, 12, 14, 15, 16	EX8	DGZ		
		1	2, 6	L	51, 52, 54, 55, 56	EX8	DGZ		
		1	3, 7	L	02, 06	EX8	DGZ		
		1	3, 7	L	12, 15, 16	EX8	DGZ		
24	5133 953AA	1	2, 6	L	01, 02, 06	EX8	DGZ		TERMINAL, Eyelet
		1	2, 6	L	11, 12, 14, 15, 16	EX8	DGZ		
		1	2, 6	L	51, 52, 54, 55, 56	EX8	DGZ		
		1	3, 7	L	02, 06	EX8	DGZ		
		1	3, 7	L	12, 15, 16	EX8	DGZ		
25	5104 669AA	1	2, 6	L	01, 02, 06	EX8	DGZ		LOCK WASHER

Refer to Model Legend Information Bookmark

AR = Use as required - = Non illustrated part # = New this model year

March 3, 2006

« RETURN TO GROUP INDEX

« »

Battery Tray & Cables
Figure 008-1005

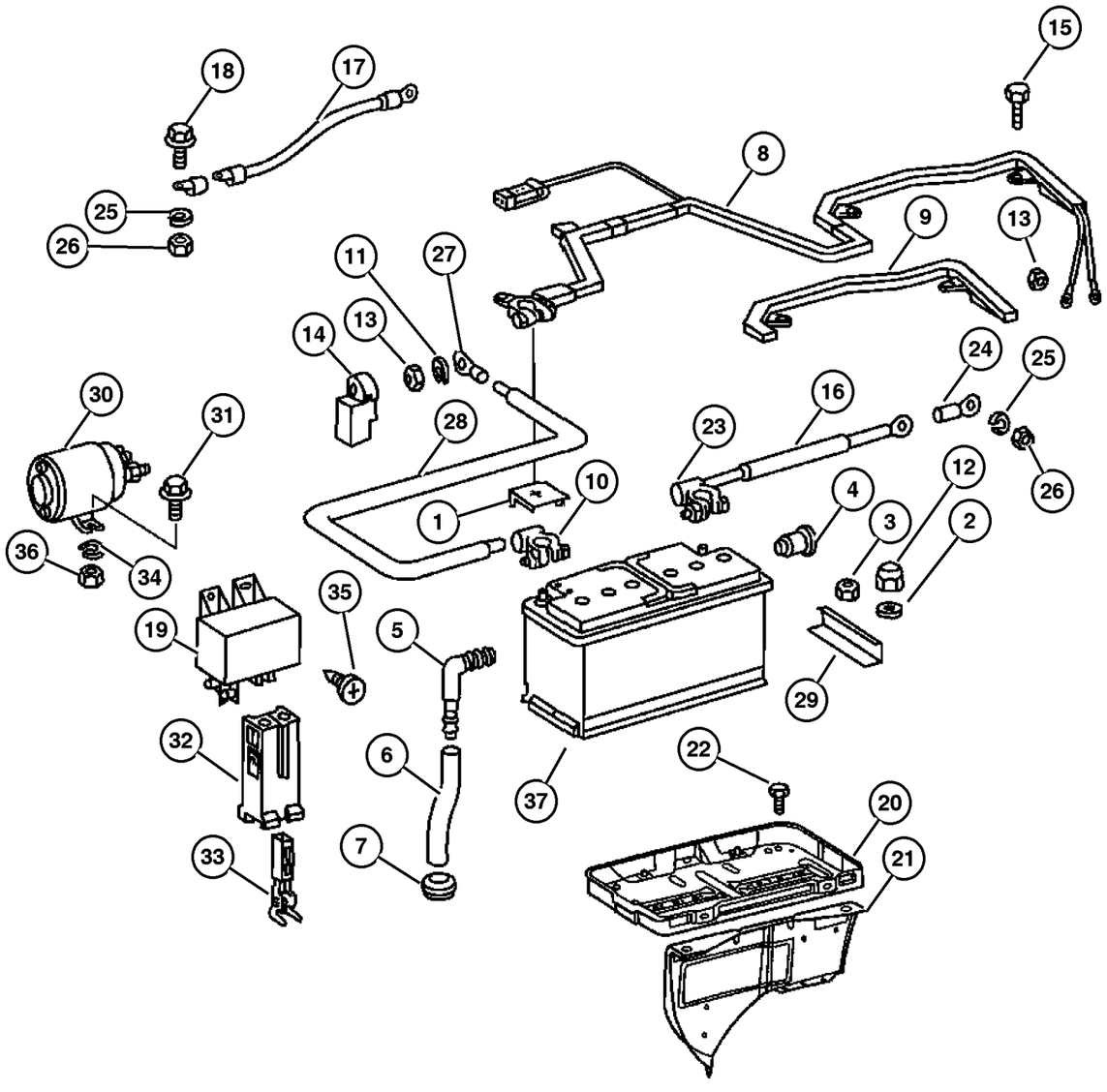

ITEM	PART NUMBER	QTY	LINE	SERIES	BODY	ENGINE	TRANS	TRIM	DESCRIPTION
		1	2, 6	L	11, 12, 14, 15, 16	EX8	DGZ		
		1	2, 6	L	51, 52, 54, 55, 56	EX8	DGZ		
		1	3, 7	L	02, 06	EX8	DGZ		
		1	3, 7	L	12, 15, 16	EX8	DGZ		
26									NUT
	5126 206AA	99	2, 6	L	01, 02, 06	EX8	DGZ		
		99	2, 6	L	11, 12, 14, 15, 16	EX8	DGZ		
		99	2, 6	L	51, 52, 54, 55, 56	EX8	DGZ		
		99	3, 7	L	02, 06	EX8	DGZ		
		99	3, 7	L	12, 15, 16	EX8	DGZ		
27									TERMINAL
	5133 950AA	1	2, 6	L	01, 02, 06	EX8	DGZ		
		1	2, 6	L	11, 12, 14, 15, 16	EX8	DGZ		
		1	2, 6	L	51, 52, 54, 55, 56	EX8	DGZ		
		1	3, 7	L	02, 06	EX8	DGZ		
		1	3, 7	L	12, 15, 16	EX8	DGZ		
28									CABLE, Battery Positive
	5133 949AA	900	2, 6	L	01, 02, 06	EX8	DGZ		
		900	2, 6	L	11, 12, 14, 15, 16	EX8	DGZ		
		900	2, 6	L	51, 52, 54, 55, 56	EX8	DGZ		
		900	3, 7	L	02, 06	EX8	DGZ		
		900	3, 7	L	12, 15, 16	EX8	DGZ		
29									RAIL

Refer to Model Legend Information Bookmark

AR = Use as required - = Non illustrated part # = New this model year

March 3, 2006

« RETURN TO GROUP INDEX

« »

Battery Tray & Cables
Figure 008-1005

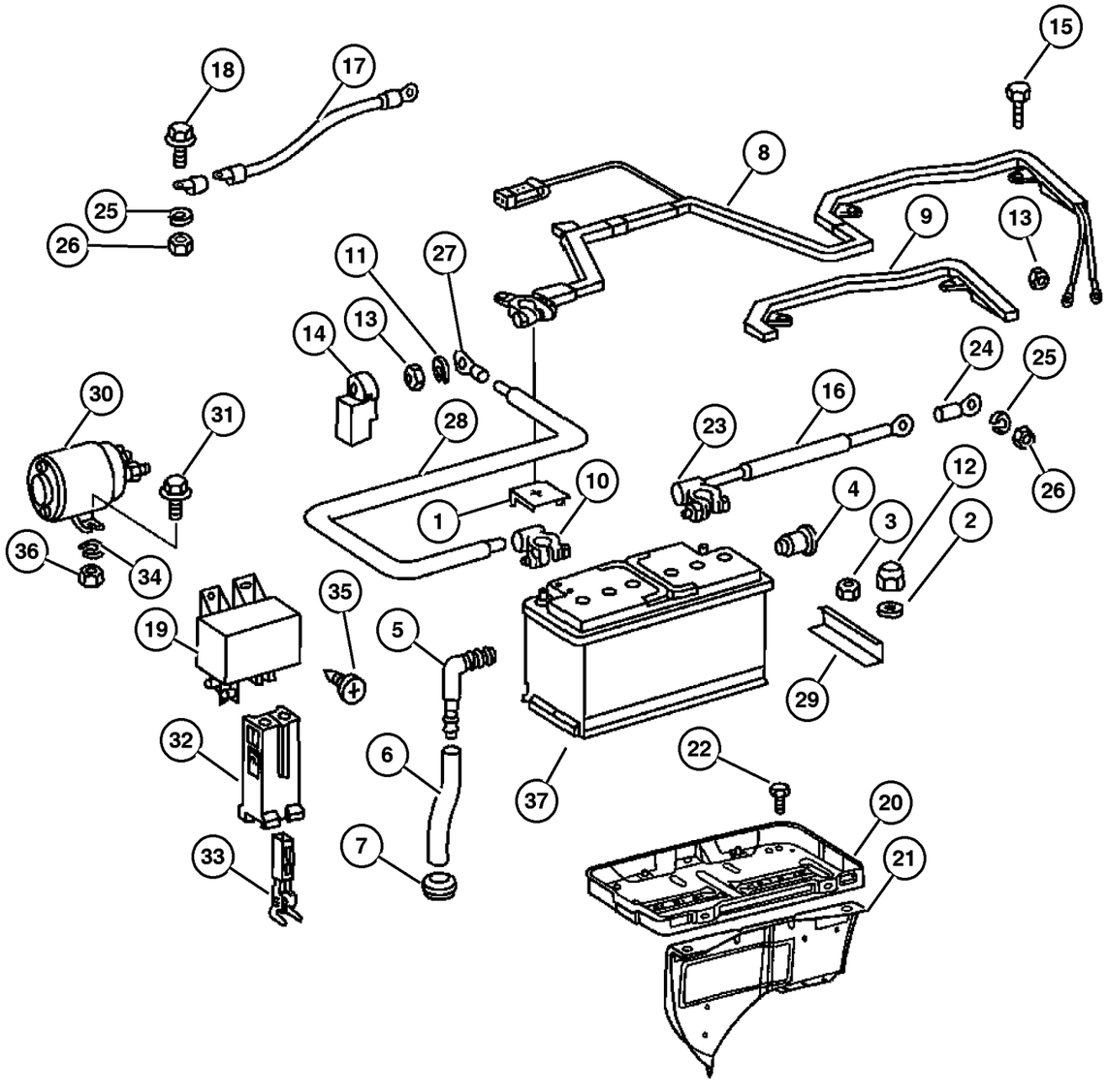

ITEM	PART NUMBER	QTY	LINE	SERIES	BODY	ENGINE	TRANS	TRIM	DESCRIPTION
	5121 607AA	2	2, 6	L	01, 02, 06	EX8	DGZ		
		2	2, 6	L	11, 12, 14, 15, 16	EX8	DGZ		
		2	2, 6	L	51, 52, 54, 55, 56	EX8	DGZ		
		2	3, 7	L	02, 06	EX8	DGZ		
		2	3, 7	L	12, 15, 16	EX8	DGZ		
30									RELAY
	5133 946AA	1	2, 6	L	01, 02, 06	EX8	DGZ		
		1	2, 6	L	11, 12, 14, 15, 16	EX8	DGZ		
		1	2, 6	L	51, 52, 54, 55, 56	EX8	DGZ		
		1	3, 7	L	02, 06	EX8	DGZ		
		1	3, 7	L	12, 15, 16	EX8	DGZ		
31									BOLT
	5133 947AA	2	2, 6	L	01, 02, 06	EX8	DGZ		
		2	2, 6	L	11, 12, 14, 15, 16	EX8	DGZ		
		2	2, 6	L	51, 52, 54, 55, 56	EX8	DGZ		
		2	3, 7	L	02, 06	EX8	DGZ		
		2	3, 7	L	12, 15, 16	EX8	DGZ		
32									CONNECTOR
	5133 944AA	1	2, 6	L	01, 02, 06	EX8	DGZ		
		1	2, 6	L	11, 12, 14, 15, 16	EX8	DGZ		
		1	2, 6	L	51, 52, 54, 55, 56	EX8	DGZ		
		1	3, 7	L	02, 06	EX8	DGZ		

Refer to Model Legend Information Bookmark

Battery Tray & Cables
Figure 008-1005

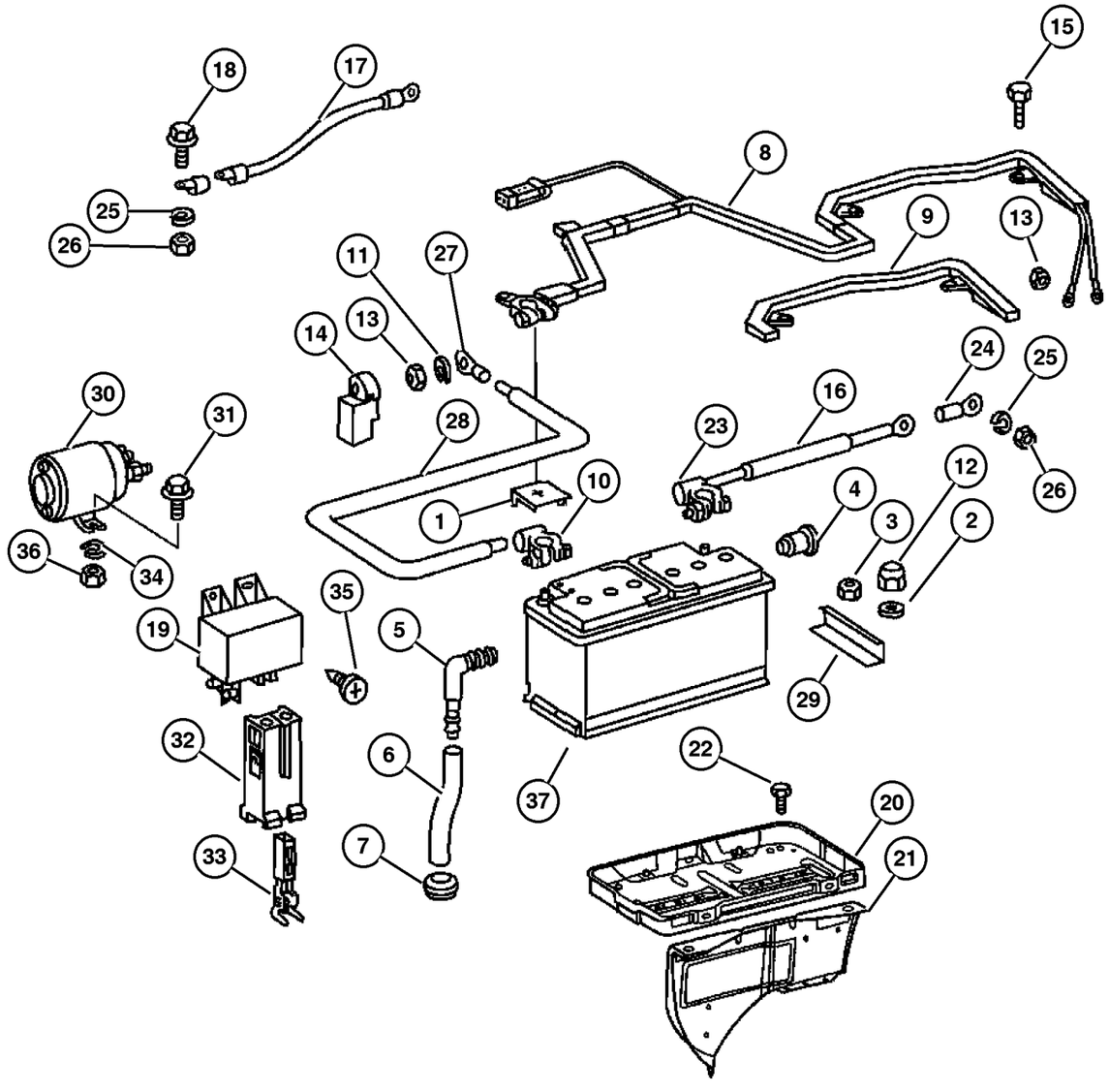

ITEM	PART NUMBER	QTY	LINE	SERIES	BODY	ENGINE	TRANS	TRIM	DESCRIPTION
		1	3, 7	L	12, 15, 16	EX8	DGZ		
33									TERMINAL
	5133 945AA	1	2, 6	L	01, 02, 06	EX8	DGZ		
		1	2, 6	L	11, 12, 14, 15, 16	EX8	DGZ		
		1	2, 6	L	51, 52, 54, 55, 56	EX8	DGZ		
		2	3, 7	L	02, 06	EX8	DGZ		
		2	3, 7	L	12, 15, 16	EX8	DGZ		
34									WASHER, Lock
	5104 668AA	2	2, 6	L	01, 02, 06	EX8	DGZ		
		2	2, 6	L	11, 12, 14, 15, 16	EX8	DGZ		
		2	2, 6	L	51, 52, 54, 55, 56	EX8	DGZ		
		2	3, 7	L	02, 06	EX8	DGZ		
		2	3, 7	L	12, 15, 16	EX8	DGZ		
35									SCREW
	5104 609AA	2	2, 6	L	01, 02, 06	EX8	DGZ		
		2	2, 6	L	11, 12, 14, 15, 16	EX8	DGZ		
		2	2, 6	L	51, 52, 54, 55, 56	EX8	DGZ		
		2	3, 7	L	02, 06	EX8	DGZ		
		2	3, 7	L	12, 15, 16	EX8	DGZ		
36									NUT, Hex
	5133 948AA	2	2, 6	L	01, 02, 06	EX8	DGZ		
		2	2, 6	L	11, 12, 14, 15, 16	EX8	DGZ		

Refer to Model Legend Information Bookmark

AR = Use as required - = Non illustrated part # = New this model year

March 3, 2006

« RETURN TO GROUP INDEX

Battery Tray & Cables
Figure 008-1005

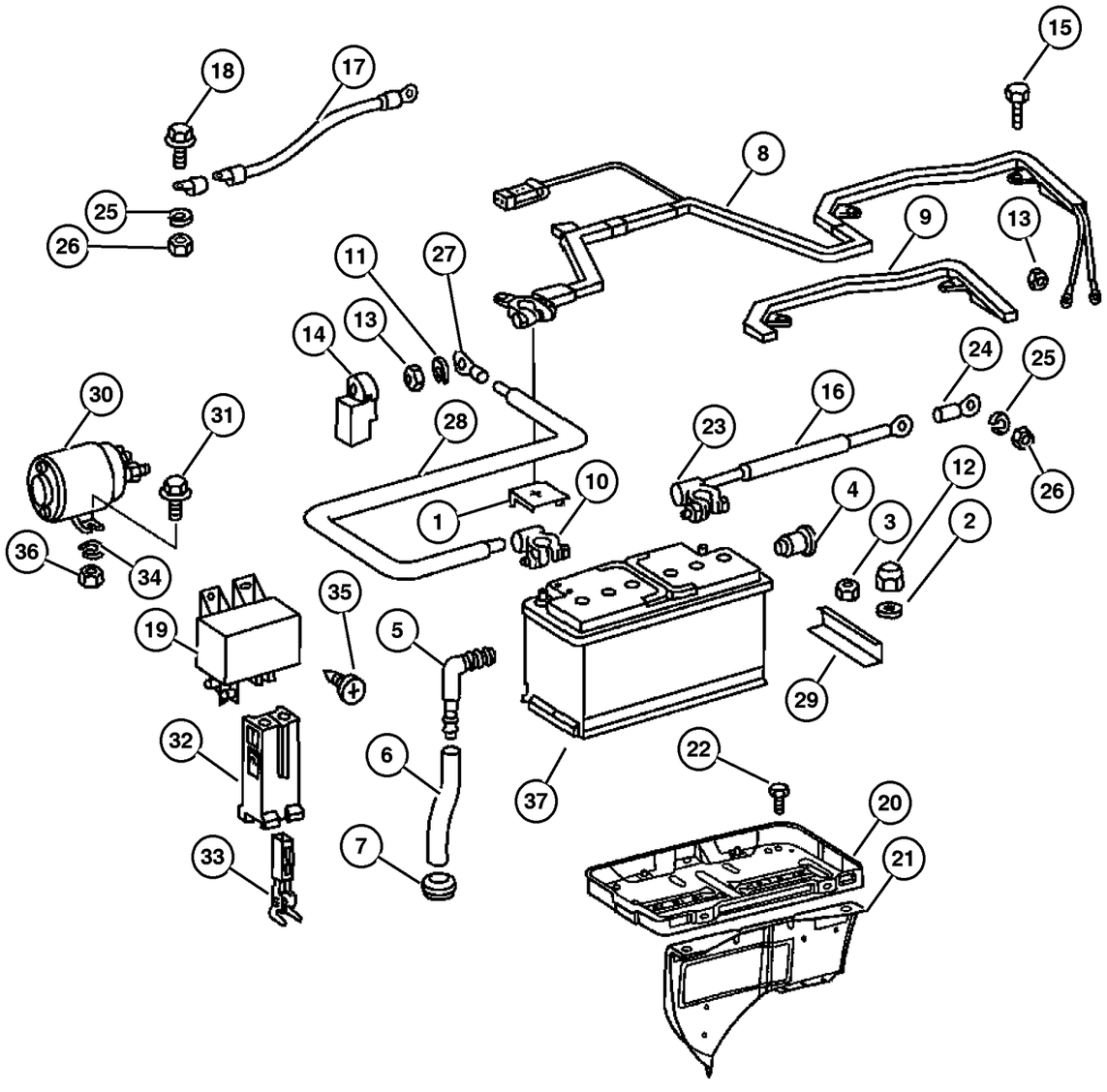

ITEM	PART NUMBER	QTY	LINE	SERIES	BODY	ENGINE	TRANS	TRIM	DESCRIPTION
		2	2, 6	L	51, 52, 54, 55, 56	EX8	DGZ		
		2	3, 7	L	02, 06	EX8	DGZ		
		2	3, 7	L	12, 15, 16	EX8	DGZ		
37	5133 941AA	1	2, 6	L	01, 02, 06	EX8	DGZ		BATTERY
		1	2, 6	L	11, 12, 14, 15, 16	EX8	DGZ		
		1	2, 6	L	51, 52, 54, 55, 56	EX8	DGZ		
		1	3, 7	L	02, 06	EX8	DGZ		
		1	3, 7	L	12, 15, 16	EX8	DGZ		

Refer to Model Legend Information Bookmark

AR = Use as required - = Non illustrated part # = New this model year

March 3, 2006

« RETURN TO GROUP INDEX

Lamps - Front End
Figure 008-1105

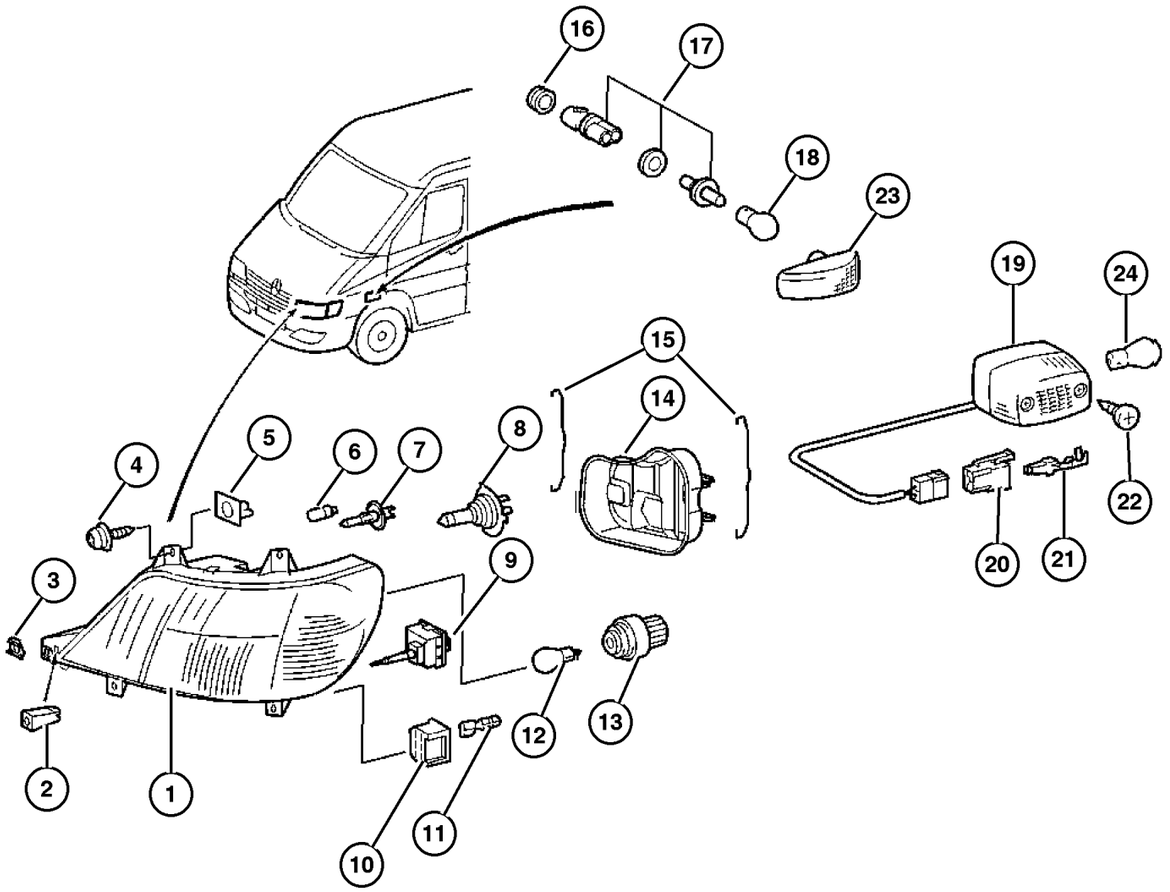

ITEM	PART NUMBER	QTY	LINE	SERIES	BODY	ENGINE	TRANS	TRIM	DESCRIPTION
1									LAMP, Headlamp Park And Turn
	5103 598AA	1	6	L	01, 02, 06	EX8	DGZ		[MGQ], Left
		1	6	L	11, 12, 14, 15, 16	EX8	DGZ		[MGQ], Left
		1	6	L	51, 52, 54, 55, 56	EX8	DGZ		[MGQ], Left
		1	7	L	02, 06	EX8	DGZ		[MGQ], Left
		1	7	L	12, 15, 16	EX8	DGZ		[MGQ], Left
	5103 599AA	1	6	L	01, 02, 06	EX8	DGZ		[MGQ], Right
		1	6	L	11, 12, 14, 15, 16	EX8	DGZ		[MGQ], Right
		1	6	L	51, 52, 54, 55, 56	EX8	DGZ		[MGQ], Right
		1	7	L	02, 06	EX8	DGZ		[MGQ], Right
		1	7	L	12, 15, 16	EX8	DGZ		[MGQ], Right
	5104 469AA	1	6	L	01, 02, 06	EX8	DGZ		[LNJ,MGQ], Right
		1	6	L	11, 12, 14, 15, 16	EX8	DGZ		[LNJ,MGQ], Right
		1	6	L	51, 52, 54, 55, 56	EX8	DGZ		[LNJ,MGQ], Right
		1	7	L	02, 06	EX8	DGZ		[LNJ,MGQ], Right
		1	7	L	12, 15, 16	EX8	DGZ		[LNJ,MGQ], Right
	5124 510AA	1	6	L	01, 02, 06	EX8	DGZ		[LNJ,MGQ], Left
		1	6	L	11, 12, 14, 15, 16	EX8	DGZ		[LNJ,MGQ], Left
		1	6	L	51, 52, 54, 55, 56	EX8	DGZ		[LNJ,MGQ], Left
		1	7	L	02, 06	EX8	DGZ		[LNJ,MGQ]
		1	7	L	12, 15, 16	EX8	DGZ		[LNJ,MGQ]

Refer to Model Legend Information Bookmark

Lamps - Front End
Figure 008-1105

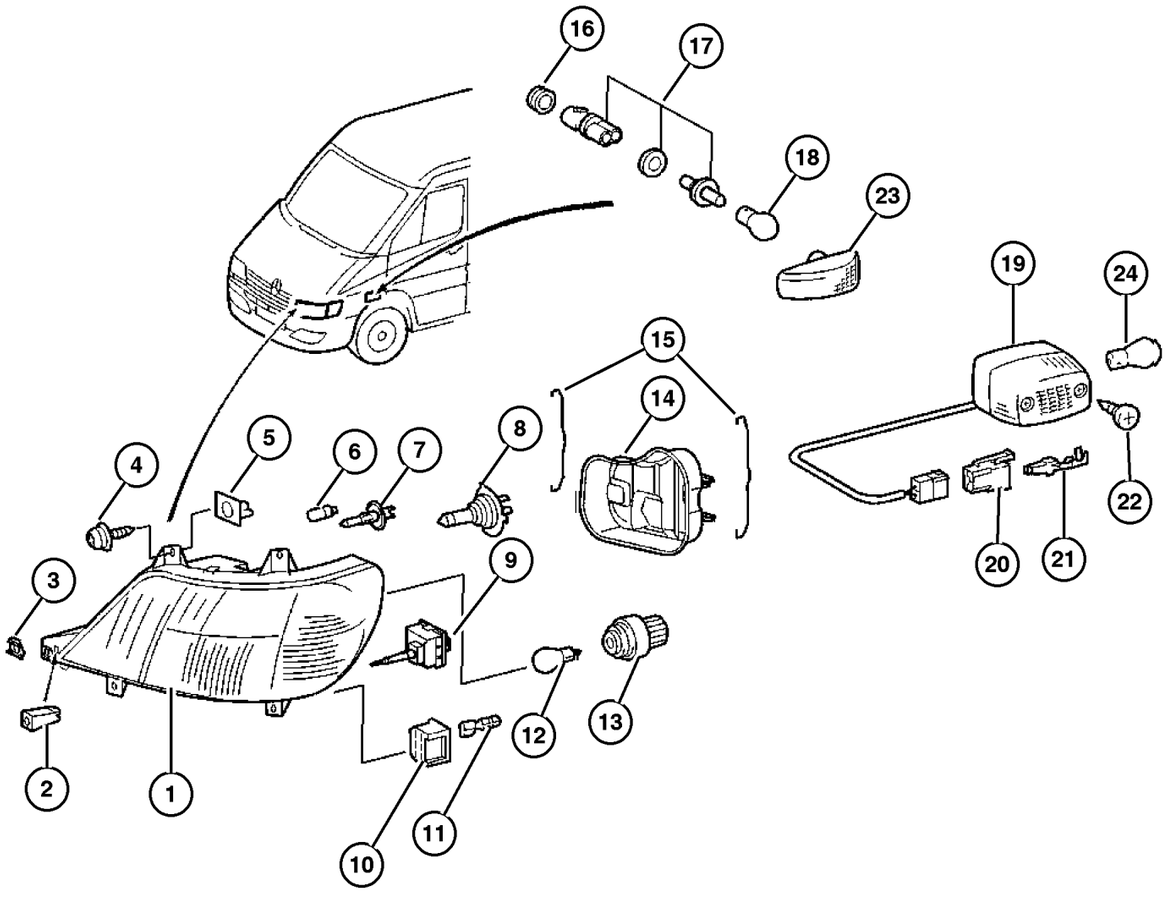

ITEM	PART NUMBER	QTY	LINE	SERIES	BODY	ENGINE	TRANS	TRIM	DESCRIPTION
	5124 526AA	1	2	L	01, 02, 06	EX8	DGZ		[MG4]
		1	2	L	11, 12, 14, 15, 16	EX8	DGZ		[MG4]
		1	2	L	51, 52, 54, 55, 56	EX8	DGZ		[MG4]
		1	3	L	02, 06	EX8	DGZ		[MG4]
		1	3	L	12, 15, 16	EX8	DGZ		[MG4]
	5124 528AA	1	2	L	01, 02, 06	EX8	DGZ		[MG4], Right
		1	2	L	11, 12, 14, 15, 16	EX8	DGZ		[MG4], Right
		1	2	L	51, 52, 54, 55, 56	EX8	DGZ		[MG4], Right
		1	3	L	02, 06	EX8	DGZ		[MG4], Right
		1	3	L	12, 15, 16	EX8	DGZ		[MG4], Right
	5124 529AA	1	2	L	01, 02, 06	EX8	DGZ		[MG4,LNJ]
		1	2	L	11, 12, 14, 15, 16	EX8	DGZ		[MG4,LNJ]
		1	2	L	51, 52, 54, 55, 56	EX8	DGZ		[MG4,LNJ]
		1	3	L	02, 06	EX8	DGZ		[MG4,LNJ]
		1	3	L	12, 15, 16	EX8	DGZ		[MG4,LNJ]
	5124 531AA	1	2	L	01, 02, 06	EX8	DGZ		[MG4,LNJ], Right
		1	2	L	11, 12, 14, 15, 16	EX8	DGZ		[MG4,LNJ], Right
		1	2	L	51, 52, 54, 55, 56	EX8	DGZ		[MG4,LNJ], Right
		1	3	L	02, 06	EX8	DGZ		[MG4,LNJ], Right
		1	3	L	12, 15, 16	EX8	DGZ		[MG4,LNJ], Right
2									NUT, Push In

Refer to Model Legend Information Bookmark

AR = Use as required - = Non illustrated part # = New this model year

March 3, 2006

Lamps - Front End
Figure 008-1105

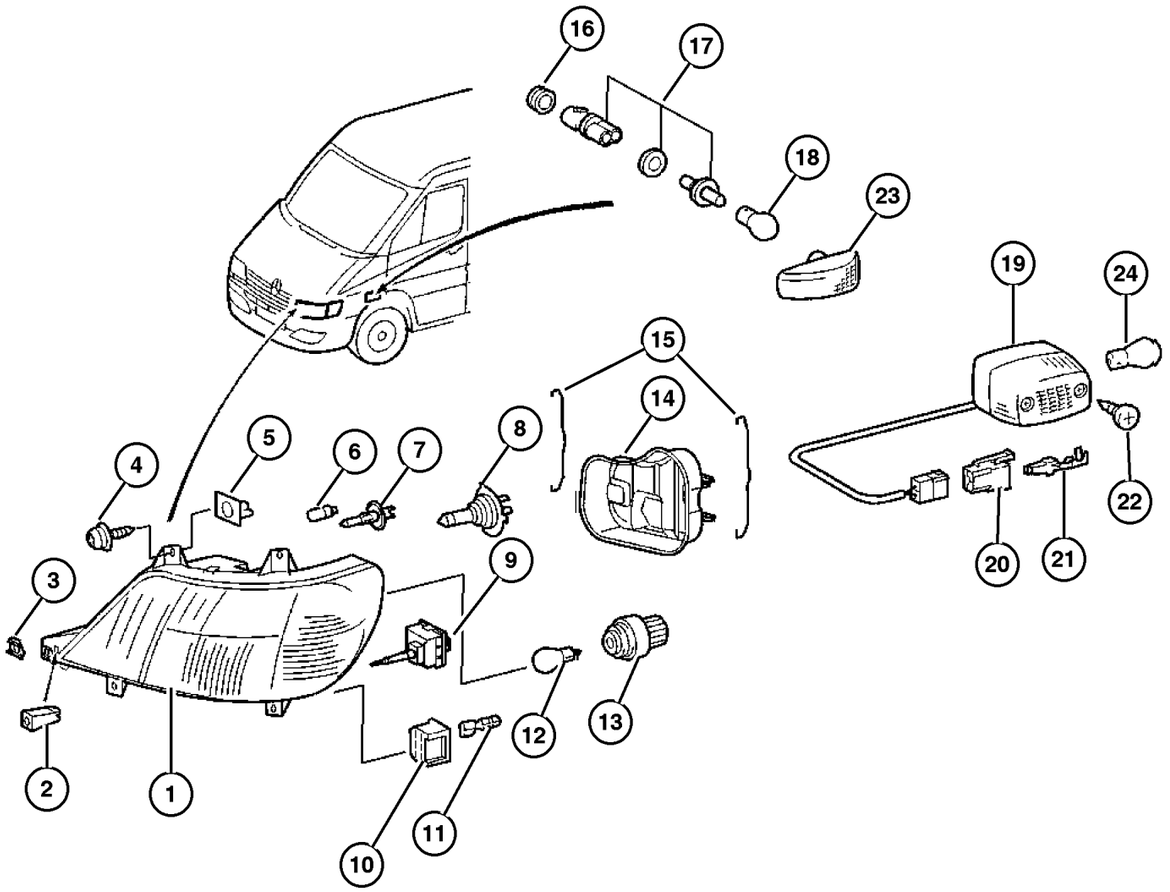

ITEM	PART NUMBER	QTY	LINE	SERIES	BODY	ENGINE	TRANS	TRIM	DESCRIPTION
	5103 784AA	2	2, 6	L	01, 02, 06	EX8	DGZ		
		2	2, 6	L	11, 12, 14, 15, 16	EX8	DGZ		
		2	2, 6	L	51, 52, 54, 55, 56	EX8	DGZ		
		2	3, 7	L	02, 06	EX8	DGZ		
		2	3, 7	L	12, 15, 16	EX8	DGZ		
3									NUT, Spring U Type
	5103 850AA	2	2, 6	L	01, 02, 06	EX8	DGZ		
		2	2, 6	L	11, 12, 14, 15, 16	EX8	DGZ		
		2	2, 6	L	51, 52, 54, 55, 56	EX8	DGZ		
		2	3, 7	L	02, 06	EX8	DGZ		
		2	3, 7	L	12, 15, 16	EX8	DGZ		
4									SCREW
	6104 614AA	16	2, 6	L	11, 12, 14, 15, 16	EX8	DGZ		
		16	2, 6	L	51, 52, 54, 55, 56	EX8	DGZ		
		16	3, 7	L	12, 15, 16	EX8	DGZ		
5									NUT, Plastic Snap-in
	5098 837AB	8	2, 6	L	01, 02, 06	EX8	DGZ		
		8	2, 6	L	11, 12, 14, 15, 16	EX8	DGZ		
		8	2, 6	L	51, 52, 54, 55, 56	EX8	DGZ		
6									BULB, 12V 5W
	5104 608AA	2	2, 6	L	01, 02, 06	EX8	DGZ		

Refer to Model Legend Information Bookmark

AR = Use as required - = Non illustrated part # = New this model year

March 3, 2006

« RETURN TO GROUP INDEX

« »

Lamps - Front End
Figure 008-1105

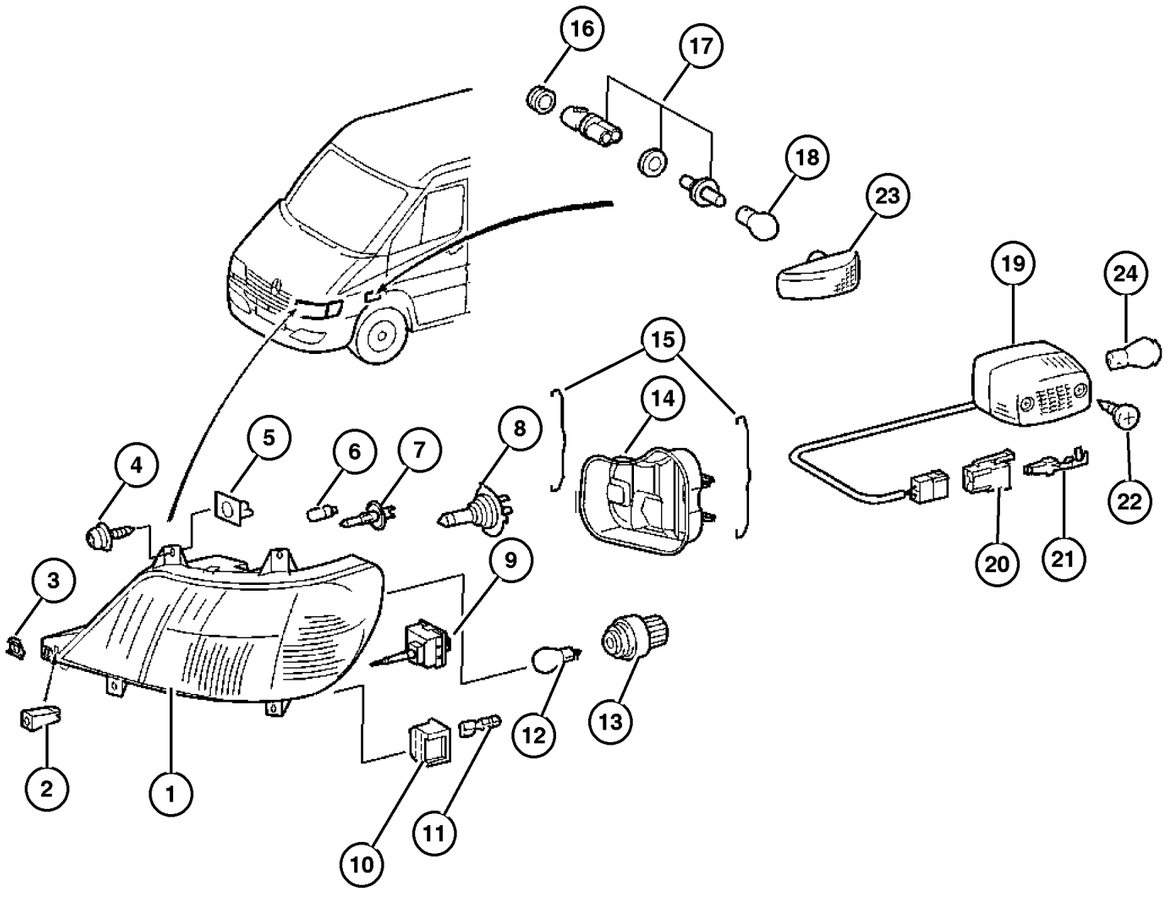

ITEM	PART NUMBER	QTY	LINE	SERIES	BODY	ENGINE	TRANS	TRIM	DESCRIPTION
		2	2, 6	L	11, 12, 14, 15, 16	EX8	DGZ		
		2	2, 6	L	51, 52, 54, 55, 56	EX8	DGZ		
		2	3, 7	L	02, 06	EX8	DGZ		
		2	3, 7	L	12, 15, 16	EX8	DGZ		
7									BULB, Fog Lamp, H-3 55 WATT
	5133 960AA	2	2, 6	L	01, 02, 06	EX8	DGZ		
		2	2, 6	L	11, 12, 14, 15, 16	EX8	DGZ		
		2	2, 6	L	51, 52, 54, 55, 56	EX8	DGZ		
		2	3, 7	L	02, 06	EX8	DGZ		
		2	3, 7	L	12, 15, 16	EX8	DGZ		
8									BULB, Headlamp, H-7
	5104 684AA	2	2, 6	L	01, 02, 06	EX8	DGZ		
		2	2, 6	L	11, 12, 14, 15, 16	EX8	DGZ		
		2	2, 6	L	51, 52, 54, 55, 56	EX8	DGZ		
		2	3, 7	L	02, 06	EX8	DGZ		
		2	3, 7	L	12, 15, 16	EX8	DGZ		
9									MOTOR, Headlamp Leveling
	5103 688AA	2	2, 6	L	01, 02, 06	EX8	DGZ		
		2	2, 6	L	11, 12, 14, 15, 16	EX8	DGZ		
		2	2, 6	L	51, 52, 54, 55, 56	EX8	DGZ		
		2	3, 7	L	02, 06	EX8	DGZ		
		2	3, 7	L	12, 15, 16	EX8	DGZ		
10									CONNECTOR

Refer to Model Legend Information Bookmark

AR = Use as required - = Non illustrated part # = New this model year

March 3, 2006

« RETURN TO GROUP INDEX

« »

Lamps - Front End
Figure 008-1105

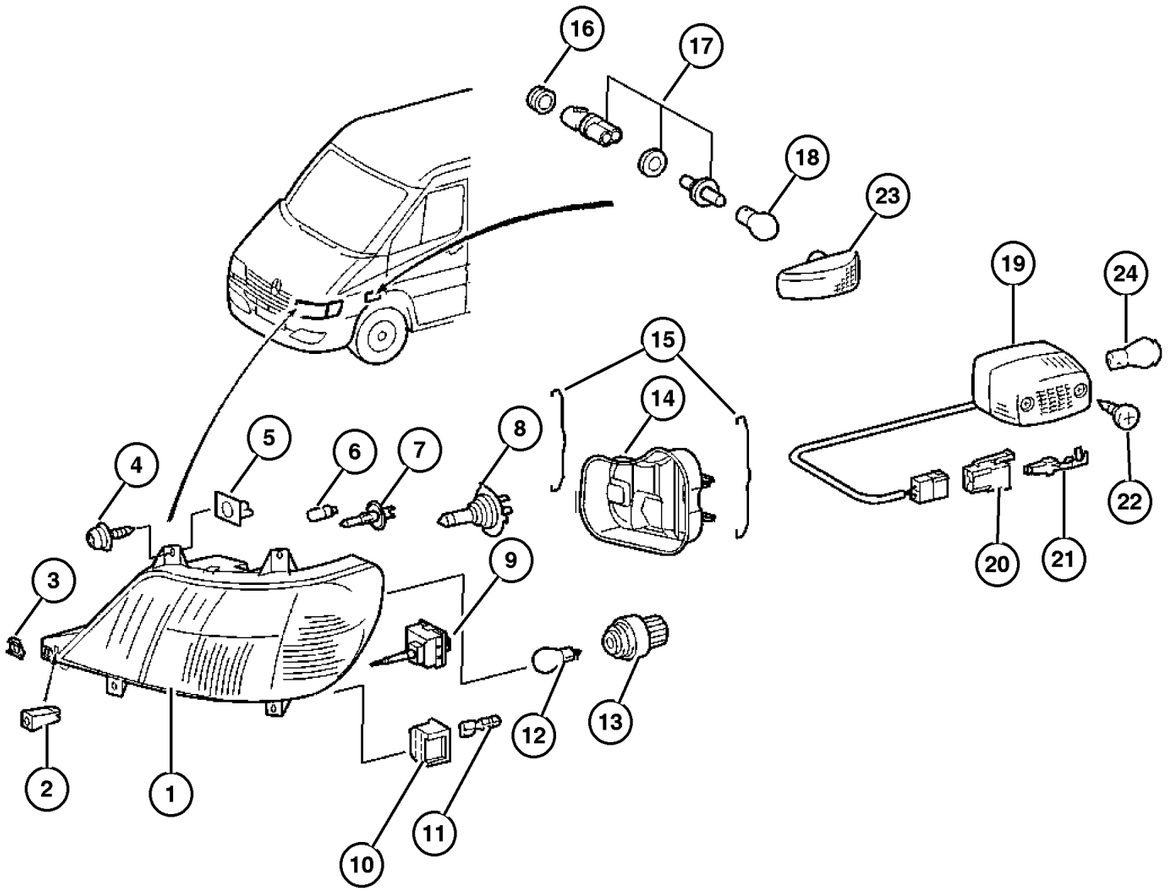

ITEM	PART NUMBER	QTY	LINE	SERIES	BODY	ENGINE	TRANS	TRIM	DESCRIPTION
	5103 896AA	2	2, 6	L	01, 02, 06	EX8	DGZ		
		2	2, 6	L	11, 12, 14, 15, 16	EX8	DGZ		
		2	2, 6	L	51, 52, 54, 55, 56	EX8	DGZ		
		2	3, 7	L	02, 06	EX8	DGZ		
		2	3, 7	L	12, 15, 16	EX8	DGZ		
11									TERMINAL, Female
	5103 898AA	99	2, 6	L	01, 02, 06	EX8	DGZ		
		99	2, 6	L	11, 12, 14, 15, 16	EX8	DGZ		
		99	2, 6	L	51, 52, 54, 55, 56	EX8	DGZ		
		99	3, 7	L	02, 06	EX8	DGZ		
		99	3, 7	L	12, 15, 16	EX8	DGZ		
12									BULB
	5104 662AA	2	6	L	01, 02, 06	EX8	DGZ		
		2	6	L	11, 12, 14, 15, 16	EX8	DGZ		
		2	7	L	02, 06	EX8	DGZ		
		2	7	L	12, 15, 16	EX8	DGZ		
13									SOCKET, Lamp
	5103 769AA	2	2, 6	L	01, 02, 06	EX8	DGZ		
		2	2, 6	L	11, 12, 14, 15, 16	EX8	DGZ		
		2	2, 6	L	51, 52, 54, 55, 56	EX8	DGZ		
		2	3, 7	L	02, 06	EX8	DGZ		
		2	3, 7	L	12, 15, 16	EX8	DGZ		
14									COVER, Lamp

Refer to Model Legend Information Bookmark

AR = Use as required - = Non illustrated part # = New this model year

March 3, 2006

« RETURN TO GROUP INDEX

Lamps - Front End
Figure 008-1105

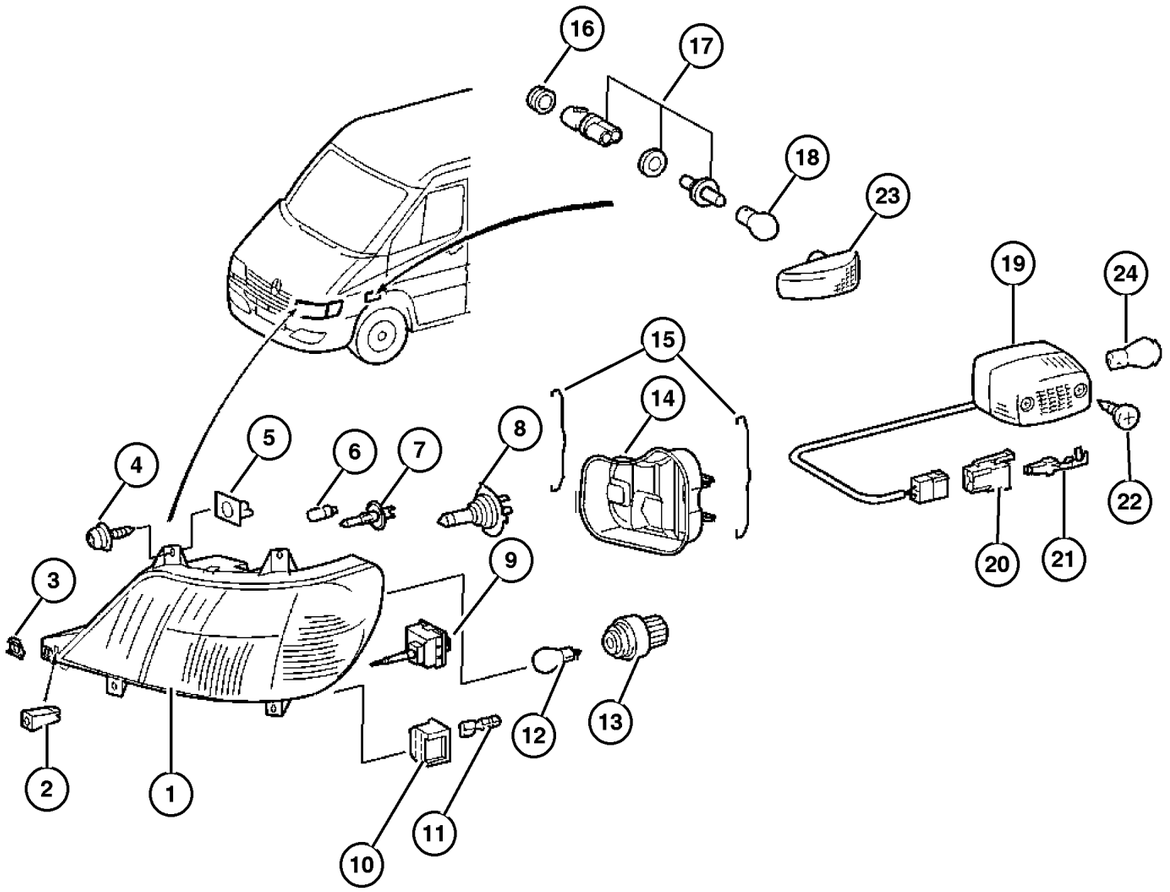

ITEM	PART NUMBER	QTY	LINE	SERIES	BODY	ENGINE	TRANS	TRIM	DESCRIPTION
	5103 685AA	1	2, 6	L	01, 02, 06	EX8	DGZ		
		1	2, 6	L	11, 12, 14, 15, 16	EX8	DGZ		
		1	2, 6	L	51, 52, 54, 55, 56	EX8	DGZ		
		1	3, 7	L	02, 06	EX8	DGZ		
		1	3, 7	L	12, 15, 16	EX8	DGZ		
15									SPRING, Retainer
	5103 681AA	2	2, 6	L	01, 02, 06	EX8	DGZ		Inside of Lamp
		2	2, 6	L	11, 12, 14, 15, 16	EX8	DGZ		Inside of Lamp
		2	2, 6	L	51, 52, 54, 55, 56	EX8	DGZ		Inside of Lamp
		2	3, 7	L	02, 06	EX8	DGZ		Inside of Lamp
		2	3, 7	L	12, 15, 16	EX8	DGZ		Inside of Lamp
	5103 682AA	2	2, 6	L	01, 02, 06	EX8	DGZ		Outside of Lamp
		2	2, 6	L	11, 12, 14, 15, 16	EX8	DGZ		Outside of Lamp
		2	2, 6	L	51, 52, 54, 55, 56	EX8	DGZ		Outside of Lamp
		2	3, 7	L	02, 06	EX8	DGZ		Outside of Lamp
		2	3, 7	L	12, 15, 16	EX8	DGZ		Outside of Lamp
16									GROMMET, Lamp
	5133 964AA	2	2, 6	L	01, 02, 06	EX8	DGZ		
		2	2, 6	L	11, 12, 14, 15, 16	EX8	DGZ		
		2	2, 6	L	51, 52, 54, 55, 56	EX8	DGZ		
		2	3, 7	L	02, 06	EX8	DGZ		

Refer to Model Legend Information Bookmark

Lamps - Front End
Figure 008-1105

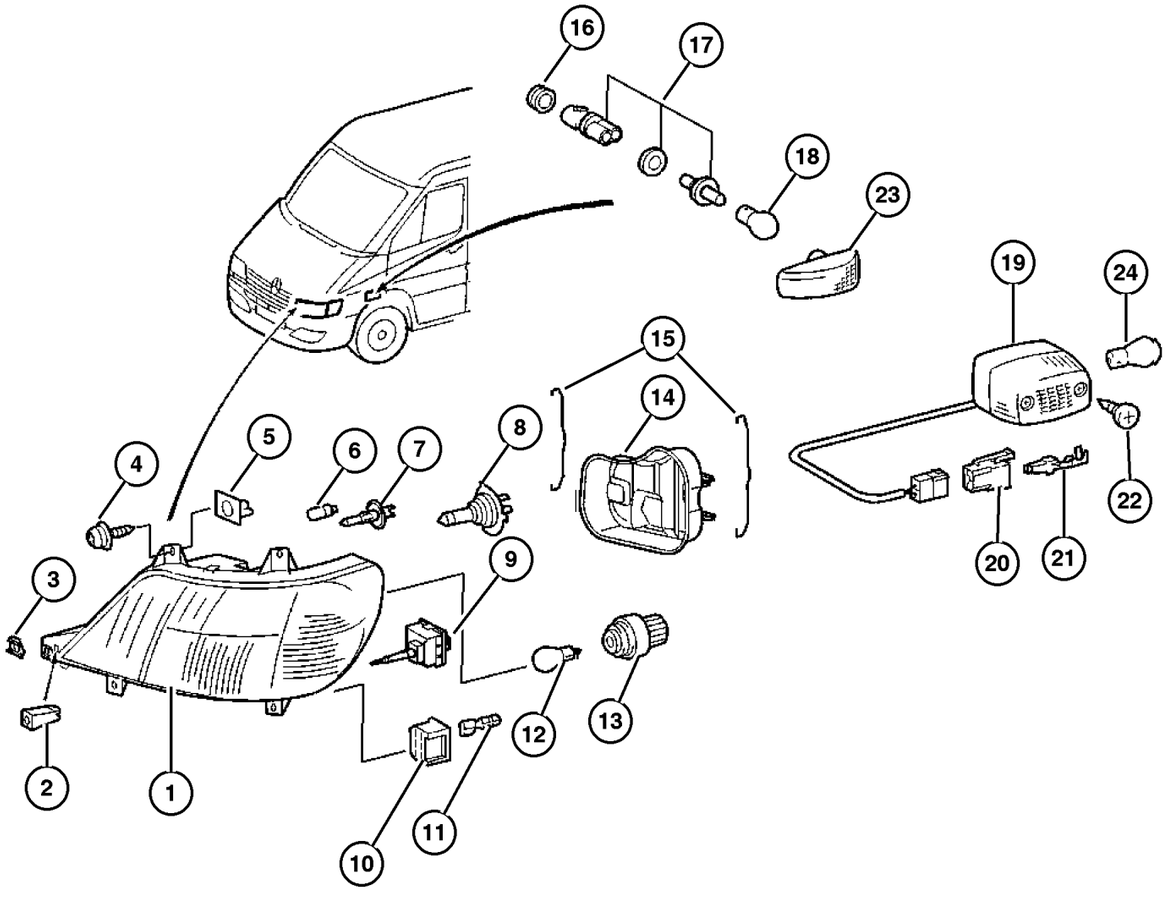

ITEM	PART NUMBER	QTY	LINE	SERIES	BODY	ENGINE	TRANS	TRIM	DESCRIPTION
		2	3, 7	L	12, 15, 16	EX8	DGZ		
17	5103 655AA	2	2, 6	L	01, 02, 06	EX8	DGZ		SOCKET
		2	2, 6	L	11, 12, 14, 15, 16	EX8	DGZ		
		2	2, 6	L	51, 52, 54, 55, 56	EX8	DGZ		
		2	3, 7	L	02, 06	EX8	DGZ		
		2	3, 7	L	12, 15, 16	EX8	DGZ		
18	5104 608AA	2	2, 6	L	01, 02, 06	EX8	DGZ		BULB, 12V 5W
		2	2, 6	L	11, 12, 14, 15, 16	EX8	DGZ		
		2	2, 6	L	51, 52, 54, 55, 56	EX8	DGZ		
		2	3, 7	L	02, 06	EX8	DGZ		
		2	3, 7	L	12, 15, 16	EX8	DGZ		
19	5103 935AA	2	2, 6	L	01, 02, 06				LAMP, Turn Signal
		2	2, 6	L	11, 12, 14, 15, 16				
		2	2, 6	L	51, 52, 54, 55, 56				
		2	3, 7	L	02, 06				
		2	3, 7	L	12, 15, 16				
20	5120 679AA	2	2, 6	L	01, 02, 06	EX8	DGZ		CONNECTOR
		2	2, 6	L	11, 12, 14, 15, 16	EX8	DGZ		

Refer to Model Legend Information Bookmark

AR = Use as required - = Non illustrated part # = New this model year

March 3, 2006

« RETURN TO GROUP INDEX

« »

Lamps - Front End
Figure 008-1105

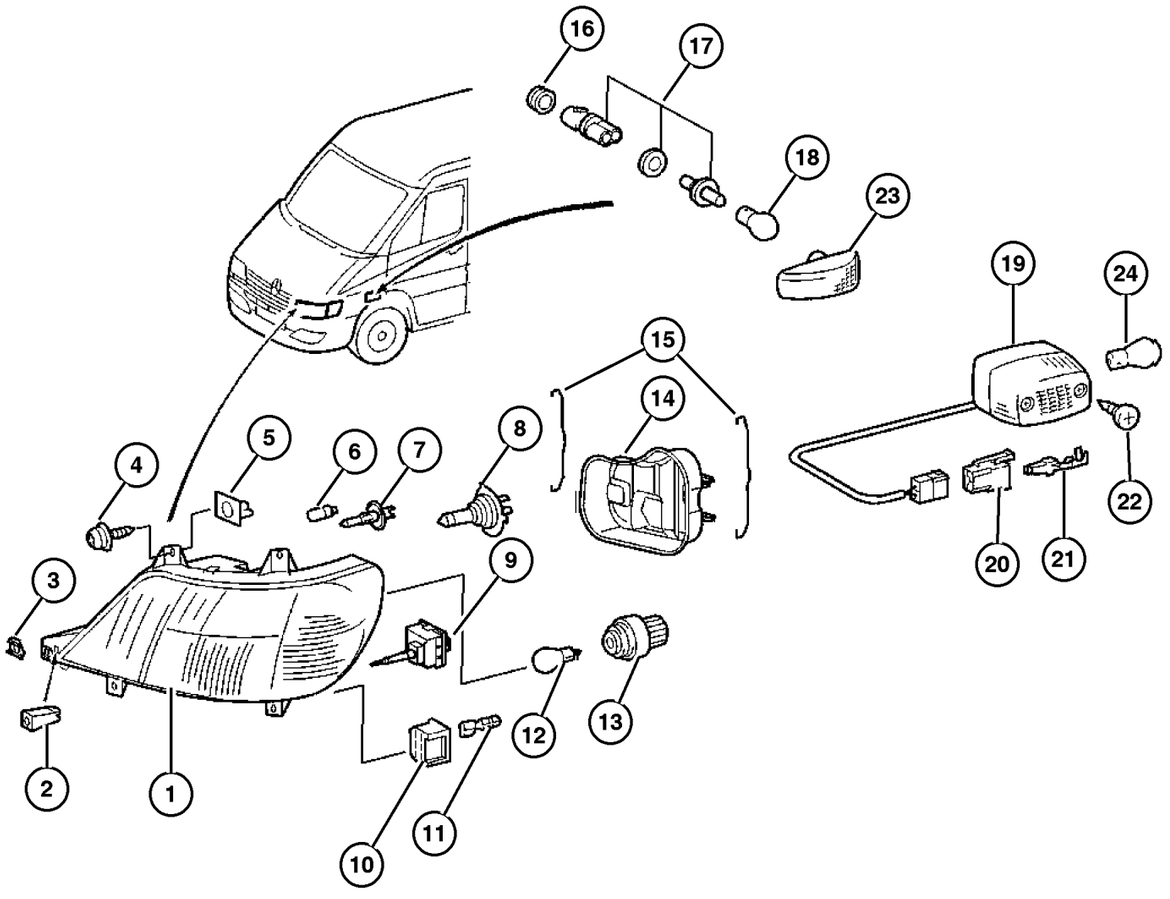

ITEM	PART NUMBER	QTY	LINE	SERIES	BODY	ENGINE	TRANS	TRIM	DESCRIPTION
		2	2, 6	L	51, 52, 54, 55, 56	EX8	DGZ		
		2	3, 7	L	02, 06	EX8	DGZ		
		2	3, 7	L	12, 15, 16	EX8	DGZ		
21									TERMINAL
	5103 881AA	99	2, 6	L	01, 02, 06	EX8	DGZ		
		99	2, 6	L	11, 12, 14, 15, 16	EX8	DGZ		
		99	2, 6	L	51, 52, 54, 55, 56	EX8	DGZ		
		99	3, 7	L	02, 06	EX8	DGZ		
		99	3, 7	L	12, 15, 16	EX8	DGZ		
22									SCREW
	6104 498AA	8	2, 6	L	56	EX8	DGZ		
		8	3, 7	L	16	EX8	DGZ		
23									LAMP, Side Repeater
	5124 431AA	2	2, 6	L	01, 02, 06	EX8	DGZ		
		2	2, 6	L	11, 12, 14, 15, 16	EX8	DGZ		
		2	2, 6	L	51, 52, 54, 55, 56	EX8	DGZ		
		2	3, 7	L	02, 06	EX8	DGZ		
		2	3, 7	L	12, 15, 16	EX8	DGZ		
24									BULB
	5104 646AA	6	2, 6	L	01, 02, 06	EX8	DGZ		
		4	2, 6	L	11, 12, 14, 15, 16	EX8	DGZ		
		4	2, 6	L	51, 52, 54, 55, 56	EX8	DGZ		
		6	3, 7	L	02, 06	EX8	DGZ		
		4	3, 7	L	12, 15, 16	EX8	DGZ		

Refer to Model Legend Information Bookmark

AR = Use as required - = Non illustrated part # = New this model year

March 3, 2006

« RETURN TO GROUP INDEX

«

Lamps - Rear End
Figure 008-1110

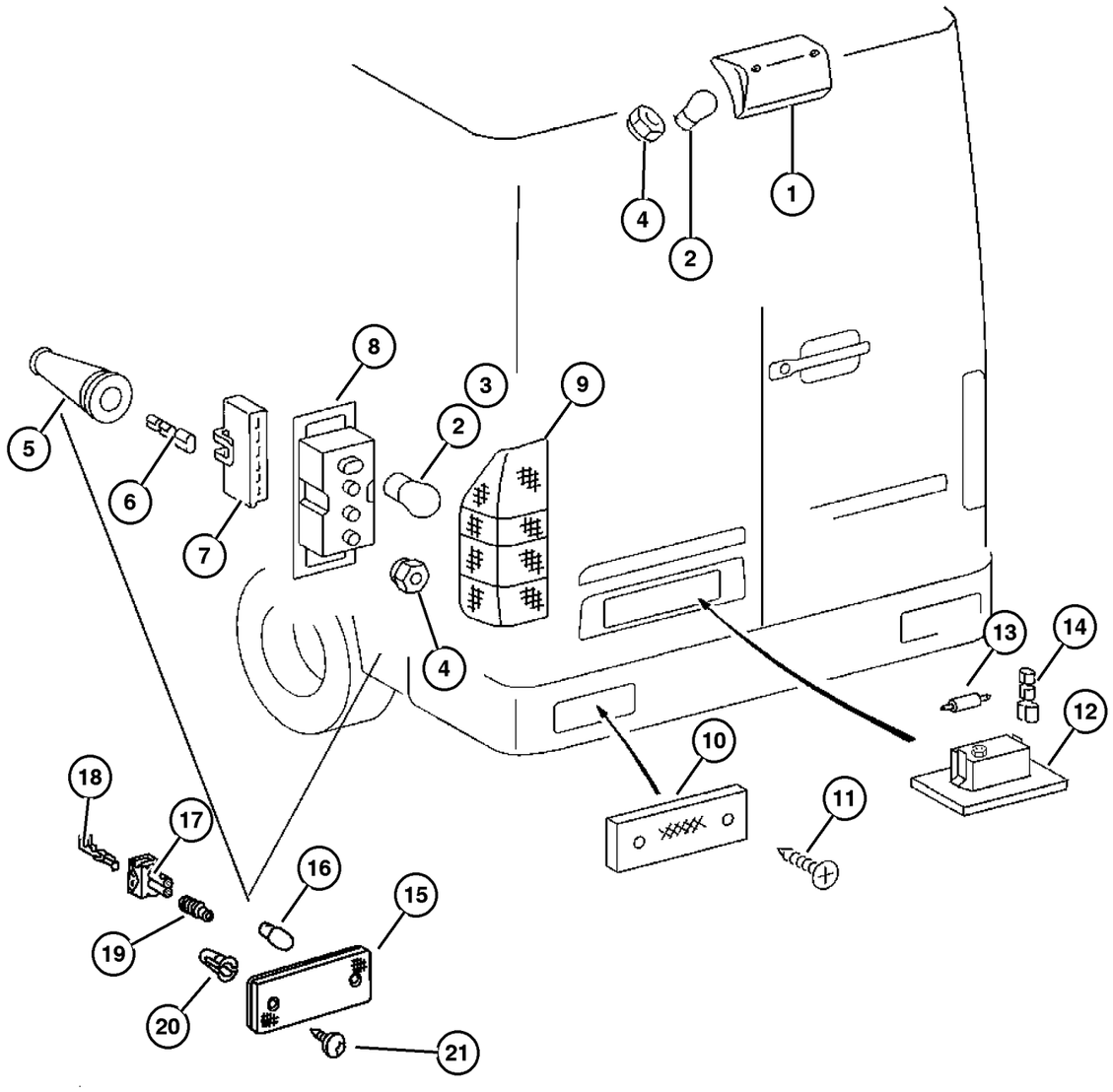

ITEM	PART NUMBER	QTY	LINE	SERIES	BODY	ENGINE	TRANS	TRIM	DESCRIPTION
1									LAMP, Center High Mounted Stop
	5103 804AA	1	2, 6	L	14, 15, 16	EX8	DGZ		
		1	2, 6	L	54, 55, 56	EX8	DGZ		
		1	3, 7	L	15, 16	EX8	DGZ		
	5124 473AA	1	2, 6	L	11, 12	EX8	DGZ		
		1	2, 6	L	51, 52	EX8	DGZ		
		1	3, 7	L	12	EX8	DGZ		
2									BULB
	5104 646AA	1	2, 6	L	11, 12, 14, 15, 16	EX8	DGZ		Single fillament
		1	2, 6	L	51, 52, 54, 55, 56	EX8	DGZ		Single fillament
		1	3, 7	L	12, 15, 16	EX8	DGZ		Single fillament
3									BULB, TAIL LAMP
	5104 647AA	2	2, 6	L	11, 12, 14, 15, 16	EX8	DGZ		Double fillament
		2	2, 6	L	51, 52, 54, 55, 56	EX8	DGZ		Double fillament
		2	3, 7	L	12, 15, 16	EX8	DGZ		Double fillament
4									NUT, M5
	6104 707AA	2	2, 6	L	11, 12, 14, 15, 16	EX8	DGZ		
		2	2, 6	L	51, 52, 54, 55, 56	EX8	DGZ		
		2	3, 7	L	12, 15, 16	EX8	DGZ		
5									GROMMET, GROMMET
	5133 963AA	1	2, 6	L	11, 12, 14, 15, 16	EX8	DGZ		
		1	2, 6	L	51, 52, 54, 55, 56	EX8	DGZ		
		1	3, 7	L	12, 15, 16	EX8	DGZ		
6									CONNECTOR

Refer to Model Legend Information Bookmark

Lamps - Rear End
Figure 008-1110

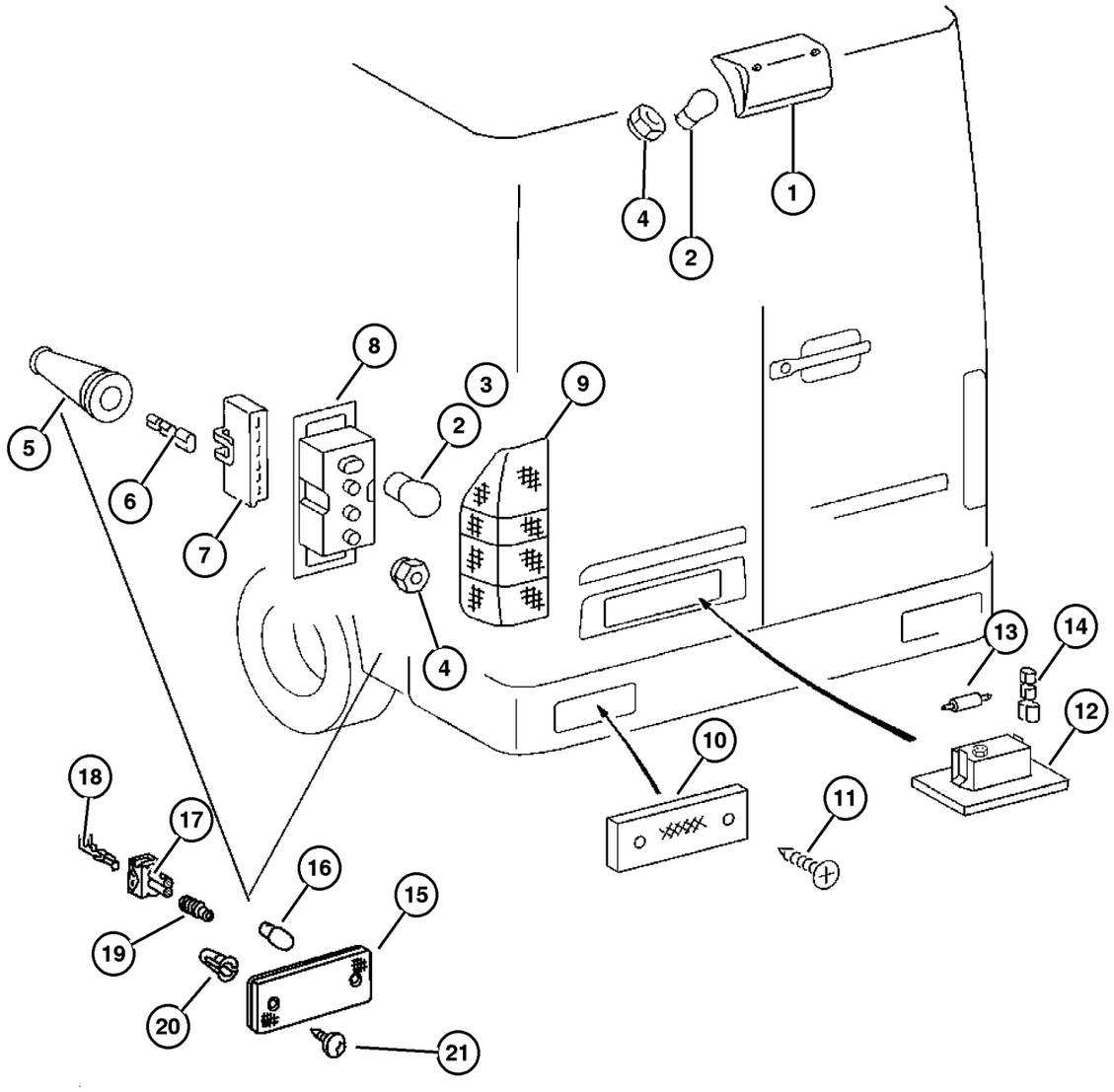

ITEM	PART NUMBER	QTY	LINE	SERIES	BODY	ENGINE	TRANS	TRIM	DESCRIPTION
	5120 596AA	1	2, 6	L	11, 12, 14, 15, 16	EX8	DGZ		
		2	2, 6	L	11, 12, 14, 15, 16	EX8	DGZ		
		2	3, 7	L	12, 15, 16	EX8	DGZ		
7									CONNECTOR
	5120 543AA	2	2, 6	L	11, 12, 14, 15, 16	EX8	DGZ		
		2	2, 6	L	51, 52, 54, 55, 56	EX8	DGZ		
		2	3, 7	L	12, 15, 16	EX8	DGZ		
8									LAMP, Tail Stop Turn
	5103 596AA	1	2, 6	L	11, 12, 14, 15, 16	EX8	DGZ		Left
		1	2, 6	L	51, 52, 54, 55, 56	EX8	DGZ		Left
		1	3, 7	L	12, 15, 16	EX8	DGZ		Left
	5103 597AA	1	2, 6	L	11, 12, 14, 15, 16	EX8	DGZ		Right
		1	2, 6	L	51, 52, 54, 55, 56	EX8	DGZ		Right
		1	3, 7	L	12, 15, 16	EX8	DGZ		Right
9									LENS, Taillamp, Serviced in Lamp Assembly, (NOT SERVICED) (Not Serviced)
10									REFLECTOR, Fascia
	5103 684AA	2	2, 6	L	11, 12, 14, 15, 16	EX8	DGZ		
		2	2, 6	L	51, 52, 54, 55, 56	EX8	DGZ		

Refer to Model Legend Information Bookmark

Lamps - Rear End
Figure 008-1110

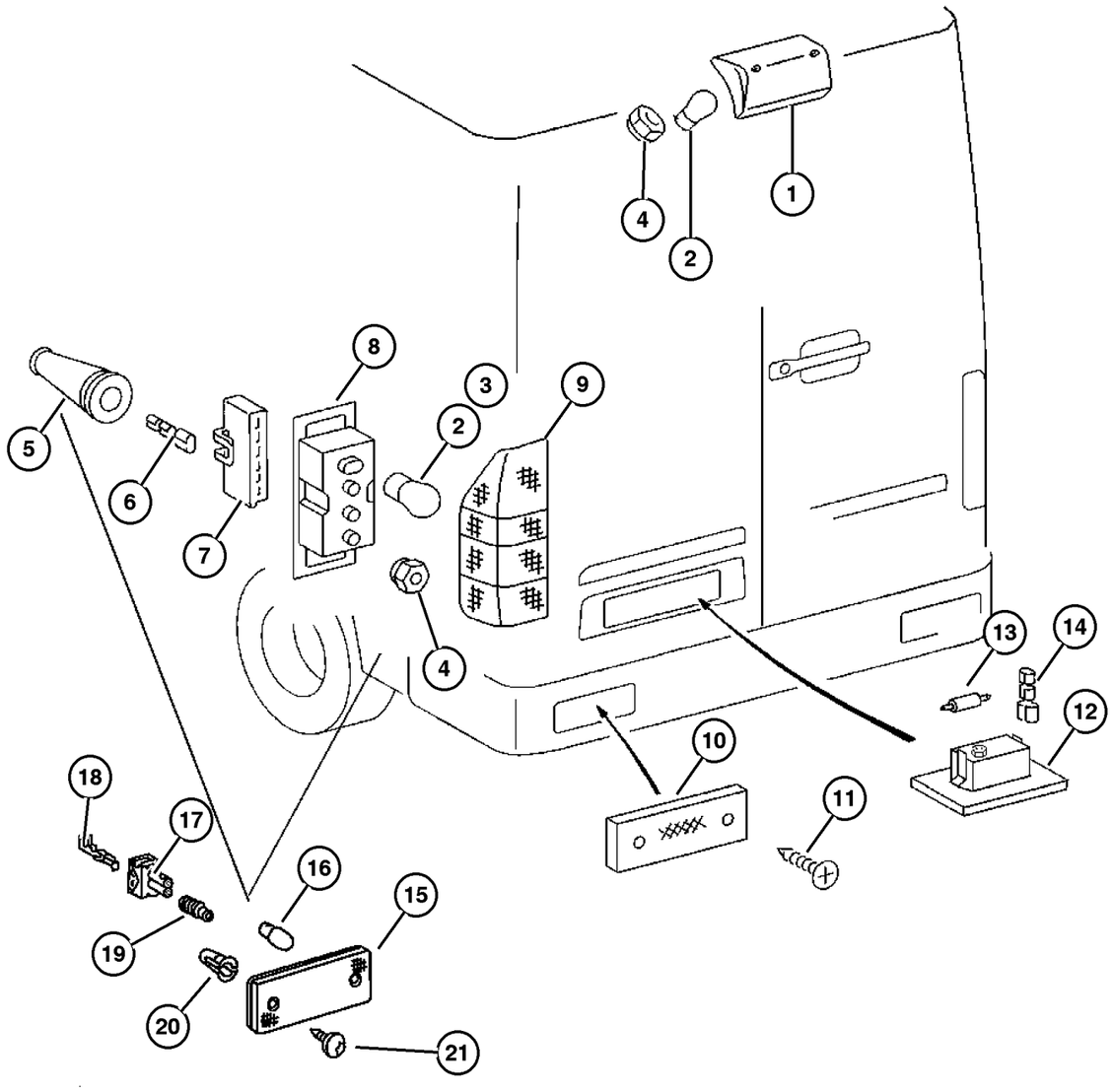

ITEM	PART NUMBER	QTY	LINE	SERIES	BODY	ENGINE	TRANS	TRIM	DESCRIPTION
		2	3, 7	L	12, 15, 16	EX8	DGZ		
11									SCREW
	6104 498AA	4	2, 6	L	11, 12, 14, 15, 16	EX8	DGZ		
		4	2, 6	L	51, 52, 54, 55, 56	EX8	DGZ		
		4	3, 7	L	12, 15, 16	EX8	DGZ		
12									LAMP, License Plate
	5104 462AA	2	2, 6	L	11, 12, 14, 15, 16	EX8	DGZ		
		2	2, 6	L	51, 52, 54, 55, 56	EX8	DGZ		
		2	3, 7	L	12, 15, 16	EX8	DGZ		
13									BULB, 12V 5W
	5096 968AA	2	2, 6	L	11, 12, 14, 15, 16	EX8	DGZ		
		2	2, 6	L	51, 52, 54, 55, 56	EX8	DGZ		
		2	3, 7	L	12, 15, 16	EX8	DGZ		
14									TERMINAL, Female
	5133 927AA	99	2, 6	L	11, 12, 14, 15, 16	EX8	DGZ		
		99	2, 6	L	51, 52, 54, 55, 56	EX8	DGZ		
		99	3, 7	L	12, 15, 16	EX8	DGZ		
15									LAMP, Side Marker
	5124 477AA	6	2, 6	L	16				
		4	2, 6	L	11, 12, 14, 15, 16				
		6	2, 6	L	56				

Refer to Model Legend Information Bookmark

AR = Use as required - = Non illustrated part # = New this model year

March 3, 2006

« RETURN TO GROUP INDEX

Lamps - Rear End
Figure 008-1110

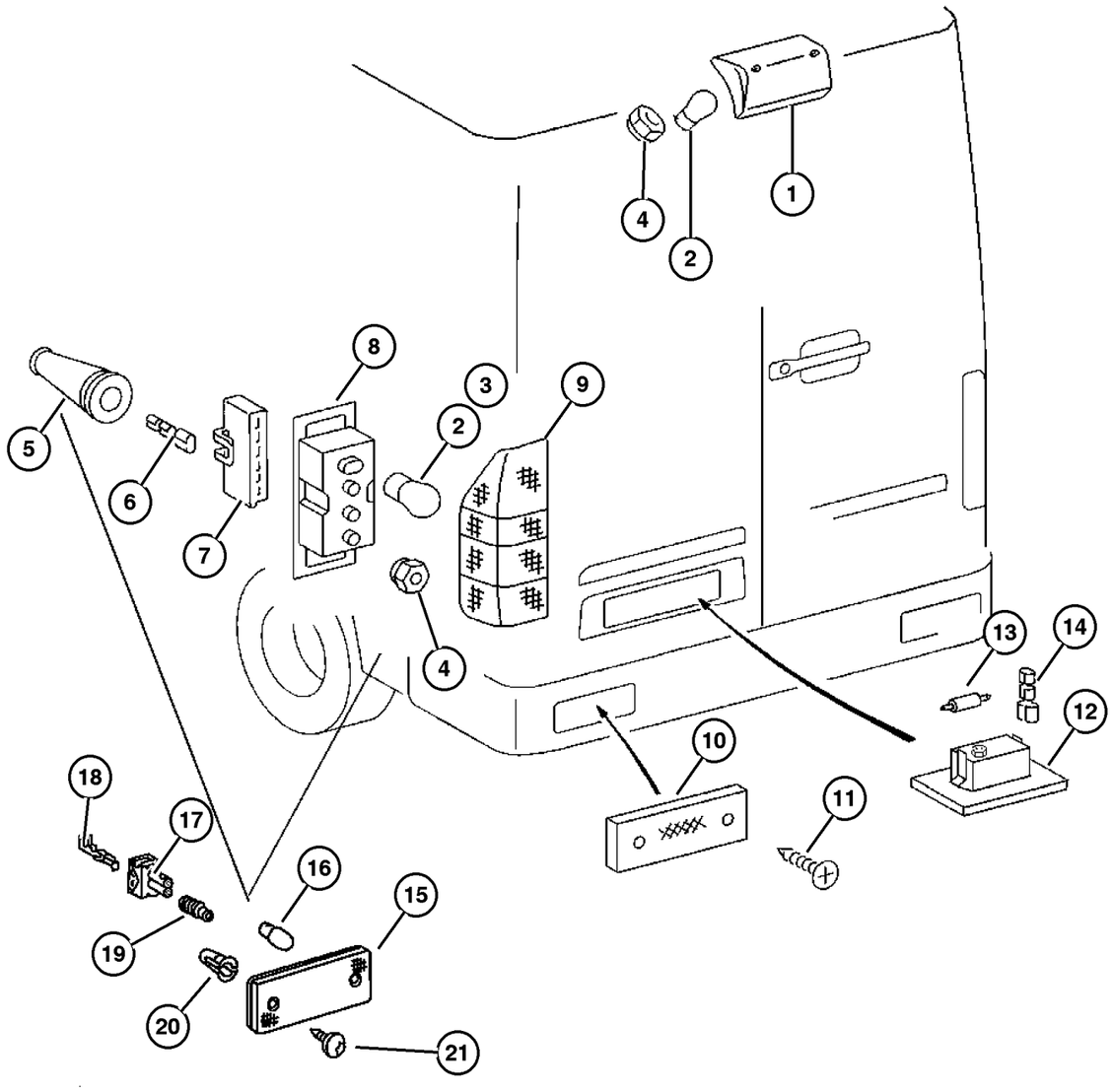

ITEM	PART NUMBER	QTY	LINE	SERIES	BODY	ENGINE	TRANS	TRIM	DESCRIPTION
		4	2, 6	L	51, 52, 54, 55, 56				
		4	3, 7	L	12, 15				
		6	3, 7	L	16				
16									BULB
	5104 649AA	6	2, 6	L	01, 02, 06	EX8	DGZ		
		2	2, 6	L	11, 12, 14, 15, 16	EX8	DGZ		
		2	2, 6	L	51, 52, 54, 55, 56	EX8	DGZ		
		6	3, 7	L	02, 06	EX8	DGZ		
		2	3, 7	L	12, 15, 16	EX8	DGZ		
17									CONNECTOR
	5103 879AA	99	2, 6	L	01, 02, 06	EX8	DGZ		
		99	2, 6	L	11, 12, 14, 15, 16	EX8	DGZ		
		99	2, 6	L	51, 52, 54, 55, 56	EX8	DGZ		
		99	3, 7	L	02, 06	EX8	DGZ		
		99	3, 7	L	12, 15, 16	EX8	DGZ		
18									TERMINAL
	5102 935AA	99	2, 6	L	01, 02, 06	EX8	DGZ		
		99	2, 6	L	11, 12, 14, 15, 16	EX8	DGZ		
		99	2, 6	L	51, 52, 54, 55, 56	EX8	DGZ		
		99	3, 7	L	02, 06	EX8	DGZ		
		99	3, 7	L	12, 15, 16	EX8	DGZ		
19									GASKET
	5120 833AA	99	2, 6	L	01, 02, 06	EX8	DGZ		

Refer to Model Legend Information Bookmark

Lamps - Rear End
Figure 008-1110

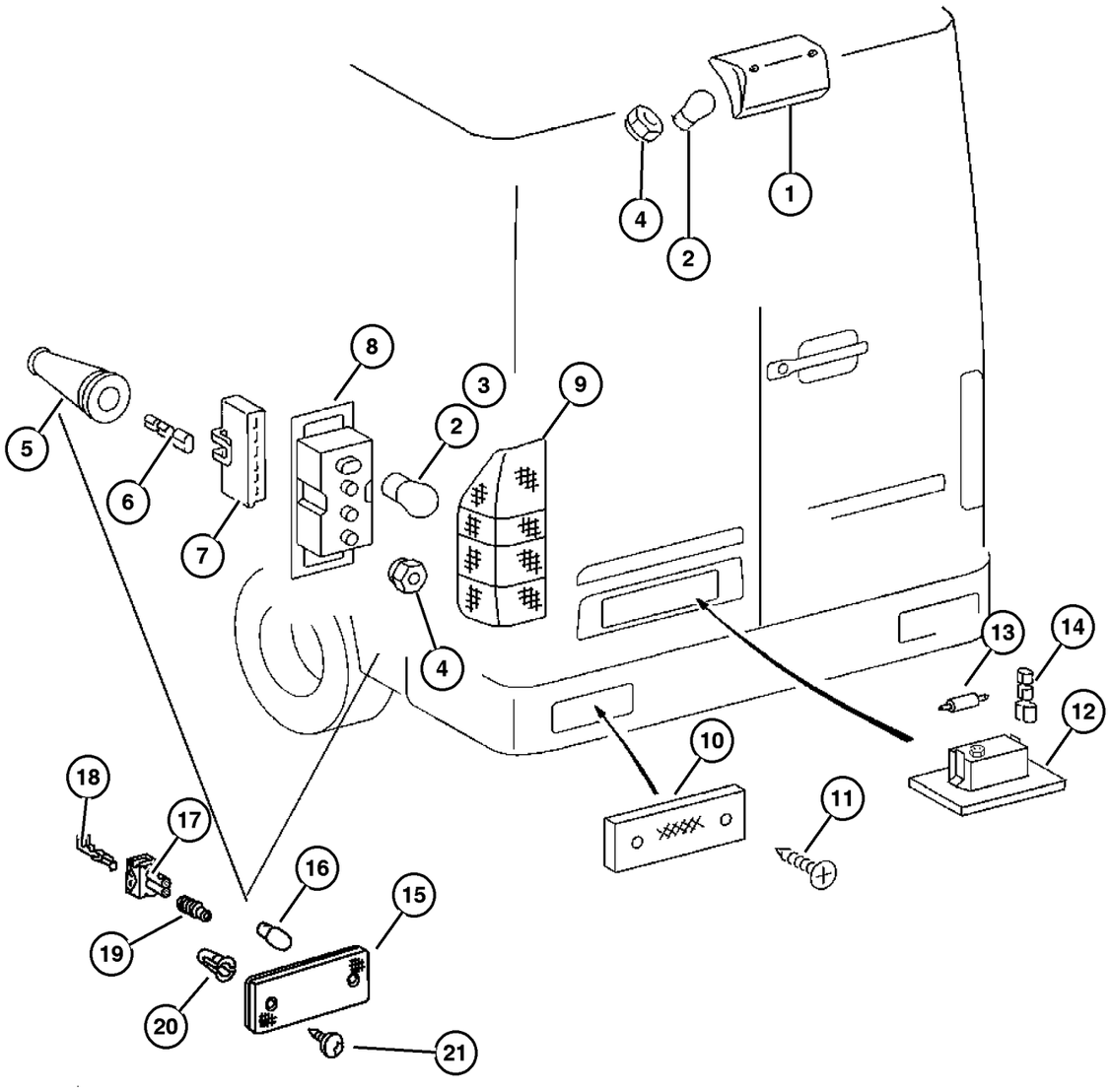

ITEM	PART NUMBER	QTY	LINE	SERIES	BODY	ENGINE	TRANS	TRIM	DESCRIPTION
		99	2, 6	L	11, 12, 14, 15, 16	EX8	DGZ		
		99	2, 6	L	51, 52, 54, 55, 56	EX8	DGZ		
		99	3, 7	L	12, 15, 16	EX8	DGZ		
		1	3, 7	L	02, 06	EX8	DGZ		
20									NUT, Push In
	5103 841AA	6	2, 6	L	01, 02, 06	EX8	DGZ		
		8	2, 6	L	16	EX8	DGZ		
		8	2, 6	L	56	EX8	DGZ		
		6	3, 7	L	02, 06	EX8	DGZ		
		8	3, 7	L	16	EX8	DGZ		
21									SCREW
	6104 498AA	4	2, 6	L	11, 12, 14, 15, 16	EX8	DGZ		
		4	3, 7	L	12, 15, 16	EX8	DGZ		

Refer to Model Legend Information Bookmark

Lamps Rear End Cab and Chassis Vehicles
Figure 008-1115

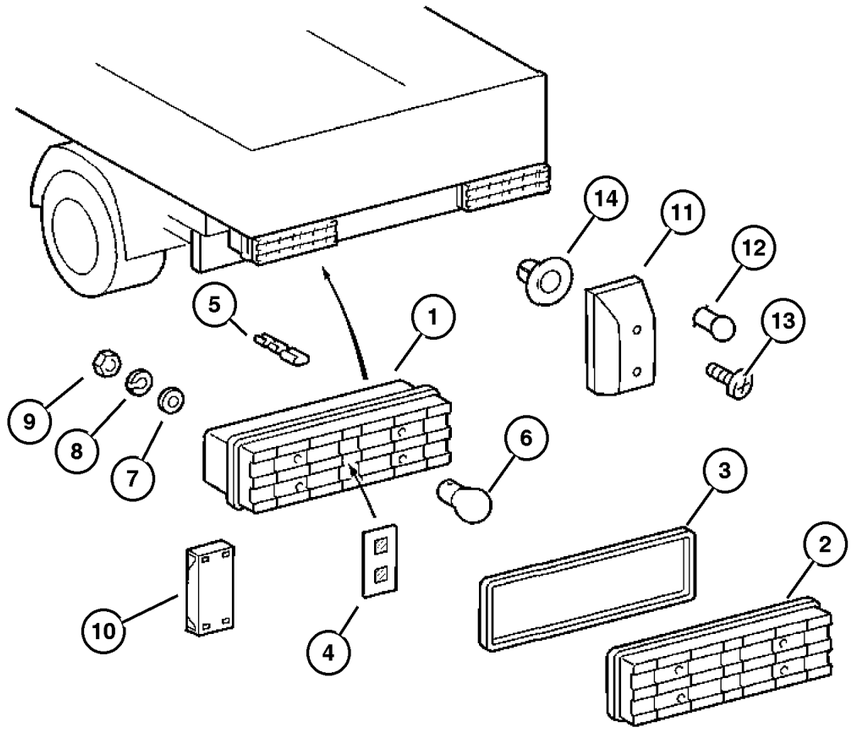

ITEM	PART NUMBER	QTY	LINE	SERIES	BODY	ENGINE	TRANS	TRIM	DESCRIPTION
1									LAMP, Tail Stop Turn
	5124 543AA	1	2, 6	L	01, 02, 06	EX8	DGZ		Left
		1	3, 7	L	02, 06	EX8	DGZ		Left
	5124 545AA	1	2, 6	L	01, 02, 06	EX8	DGZ		Right
		1	3, 7	L	02, 06	EX8	DGZ		Right
2									LENS, Serviced in lamp assembly, (NOT SERVICED) (Not Serviced)
3									GASKET, Tail Lamp, Serviced in lamp assembly, (NOT SERVICED) (Not Serviced)
4									REFLECTOR, Tail Lamp, (NOT REQUIRED)
5	5114 451AA	99	2, 6	L	01, 02, 06	EX8	DGZ		TERMINAL, Female
6									BULB
	5104 646AA	6	2, 6	L	01, 02, 06	EX8	DGZ		
		4	2, 6	L	11, 12, 14, 15, 16	EX8	DGZ		
7									WASHER, (NOT SERVICED) (Not Serviced)
8									WASHER, Lock
	5126 241AA	4	2, 6	L	01, 02, 06	EX8	DGZ		
		4	3, 7	L	02, 06	EX8	DGZ		
9									NUT
	5126 206AA	4	2, 6	L	01, 02, 06	EX8	DGZ		
		4	3, 7	L	02, 06	EX8	DGZ		
10									CAP, (NOT SERVICED) (Not Serviced)
11									LAMP, License Plate, (NOT REQUIRED)
12									BULB, 12V 10W, (NOT REQUIRED)
13									SCREW, (NOT REQUIRED)
14									NUT, Push In
	5103 841AA	6	2, 6	L	01, 02, 06	EX8	DGZ		
		8	2, 6	L	16	EX8	DGZ		
		8	2, 6	L	56	EX8	DGZ		

Refer to Model Legend Information Bookmark

Lamps Interior Passenger Van
Figure 008-1120

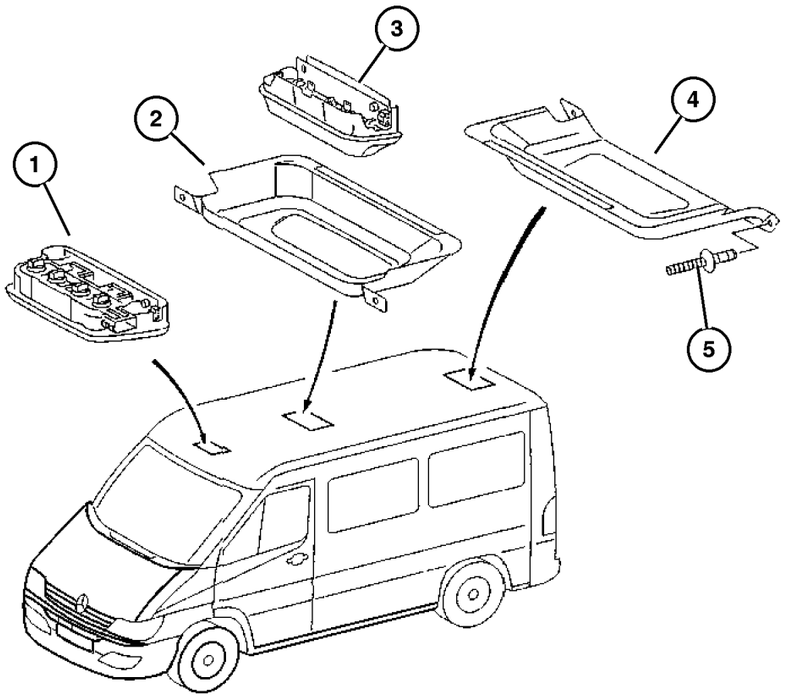

ITEM	PART NUMBER	QTY	LINE	SERIES	BODY	ENGINE	TRANS	TRIM	DESCRIPTION
1									LAMP, Reading
	5124 399AA	1	2, 6	L	01, 02, 06	EX8	DGZ		
		1	2, 6	L	11, 12, 14, 15, 16	EX8	DGZ		
		1	2, 6	L	51, 52, 54, 55, 56	EX8	DGZ		
		1	3, 7	L	02, 06	EX8	DGZ		
		1	3, 7	L	12, 15, 16	EX8	DGZ		
2									BRACKET
	1BD98 RC3AA	1	2, 6	L	11, 12, 14, 15, 16	EX8	DGZ		
		1	2, 6	L	51, 52, 54, 55, 56	EX8	DGZ		
		1	3, 7	L	12, 15, 16	EX8	DGZ		
3									SWITCH
	ZF50 RC3AA	2	2, 6	L	11, 12, 14, 15, 16	EX8	DGZ		
		2	2, 6	L	51, 52, 54, 55, 56	EX8	DGZ		
4									BRACKET
	1BD99 RC3AA	1	2, 6	L	11, 12, 14, 15, 16	EX8	DGZ		
		1	2, 6	L	51, 52, 54, 55, 56	EX8	DGZ		
5									RIVET, M4.8
	5133 934AA	4	2, 6	L	11, 12, 14, 15, 16	EX8	DGZ		
		4	2, 6	L	51, 52, 54, 55, 56	EX8	DGZ		
		4	3, 7	L	12, 15, 16	EX8	DGZ		

Refer to Model Legend Information Bookmark

Lamps Interior Cargo Van
Figure 008-1125

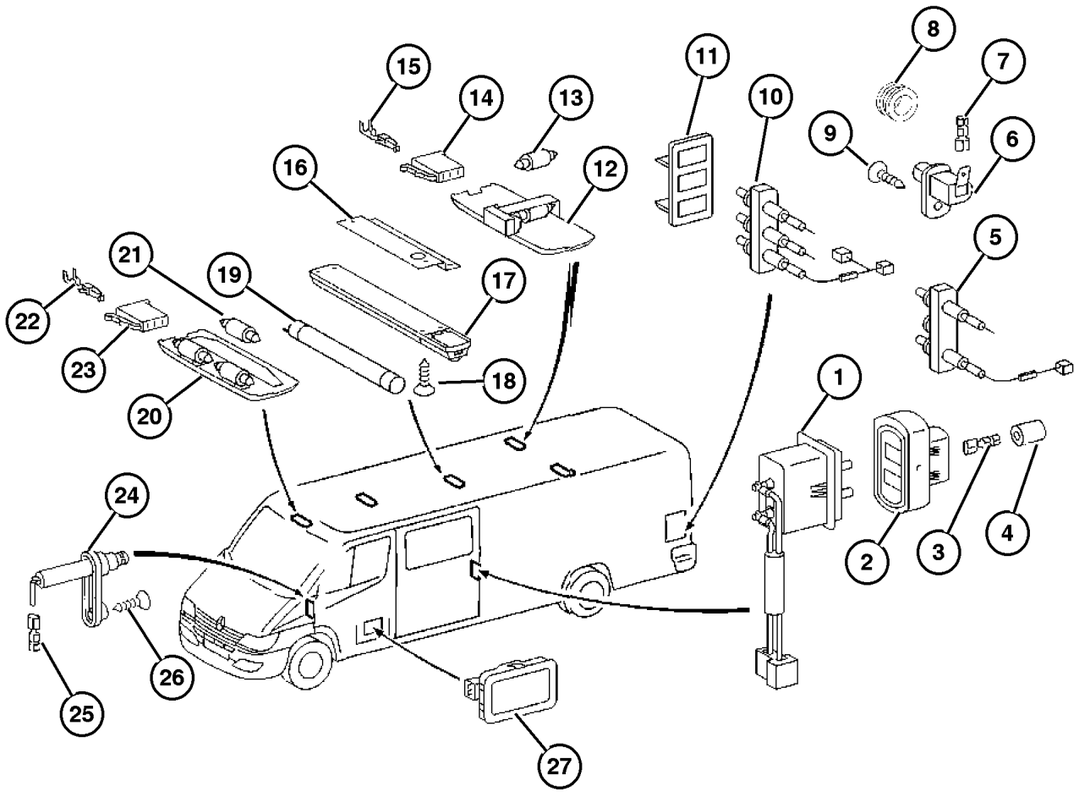

ITEM	PART NUMBER	QTY	LINE	SERIES	BODY	ENGINE	TRANS	TRIM	DESCRIPTION
1									CONTACT, Power Door Lock
	5104 463AA	2	2, 6	L	11, 12, 14, 15, 16	EX8	DGZ		
		2	2, 6	L	51, 52, 54, 55, 56	EX8	DGZ		
		4	3, 7	L	12, 15, 16	EX8	DGZ		
2									CONTACT, Power Door Lock
	5104 461AA	2	2, 6	L	11, 12, 14, 15, 16	EX8	DGZ		
		2	2, 6	L	51, 52, 54, 55, 56	EX8	DGZ		
		2	3, 7	L	12, 15, 16	EX8	DGZ		
3									TERMINAL, Female
	5114 451AA	99	2, 6	L	01, 02, 06	EX8	DGZ		
		99	2, 6	L	11, 12, 14, 15, 16	EX8	DGZ		
		99	2, 6	L	51, 52, 54, 55, 56	EX8	DGZ		
		99	3, 7	L	02, 06	EX8	DGZ		
		99	3, 7	L	12, 15, 16	EX8	DGZ		
4									GROMMET
	5133 968AA	99	2, 6	L	01, 02, 06	EX8	DGZ		
		99	2, 6	L	11, 12, 14, 15, 16	EX8	DGZ		
		99	2, 6	L	51, 52, 54, 55, 56	EX8	DGZ		
		99	3, 7	L	02, 06	EX8	DGZ		
		99	3, 7	L	12, 15, 16	EX8	DGZ		
5									CONTACT, Power Door Lock

Refer to Model Legend Information Bookmark

Lamps Interior Cargo Van
Figure 008-1125

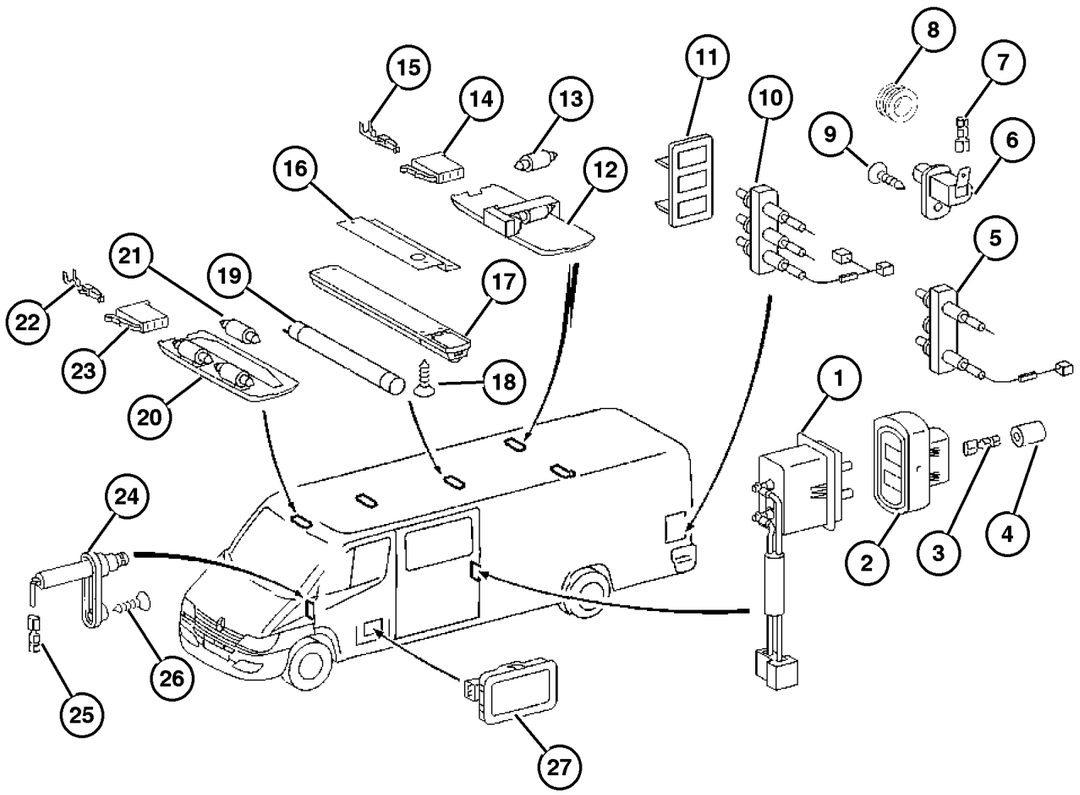

ITEM	PART NUMBER	QTY	LINE	SERIES	BODY	ENGINE	TRANS	TRIM	DESCRIPTION
	5104 016AA	3	2, 6	L	11, 12,	EX8	DGZ		
					14, 15, 16				
		3	2, 6	L	51, 52, 54, 55,	EX8	DGZ		
					56				
		3	3, 7	L	12, 15, 16	EX8	DGZ		
6									SWITCH
	5103 678AA	1	2, 6	L	11, 12, 14, 15, 16	EX8	DGZ		
		1	2, 6	L	51, 52,	EX8	DGZ		
					54, 55, 56				
		1	3, 7	L	12, 15, 16	EX8	DGZ		
7									TERMINAL, Female
	5133 359AA	99	2, 6	L	01, 02, 06	EX8	DGZ		
		99	2, 6	L	11, 12,	EX8	DGZ		
					14, 15, 16				
		99	2, 6	L	51, 52, 54, 55,	EX8	DGZ		
					56				
8									GROMMET
	5125 931AA	1	2, 6	L	11, 12, 14, 15,	EX8	DGZ		
					16				
		1	3, 7	L	12, 15, 16	EX8	DGZ		
9									SCREW
	5126 106AA	2	2, 6	L	11, 12, 14, 15, 16	EX8	DGZ		
		2	2, 6	L	51, 52,	EX8	DGZ		
					54, 55, 56				
		2	3, 7	L	02, 06	EX8	DGZ		
10									TERMINAL, Heated Rear Window
	5104 015AA	3	2, 6	L	11, 12, 14, 15, 16	EX8	DGZ		

Refer to Model Legend Information Bookmark

Lamps Interior Cargo Van
Figure 008-1125

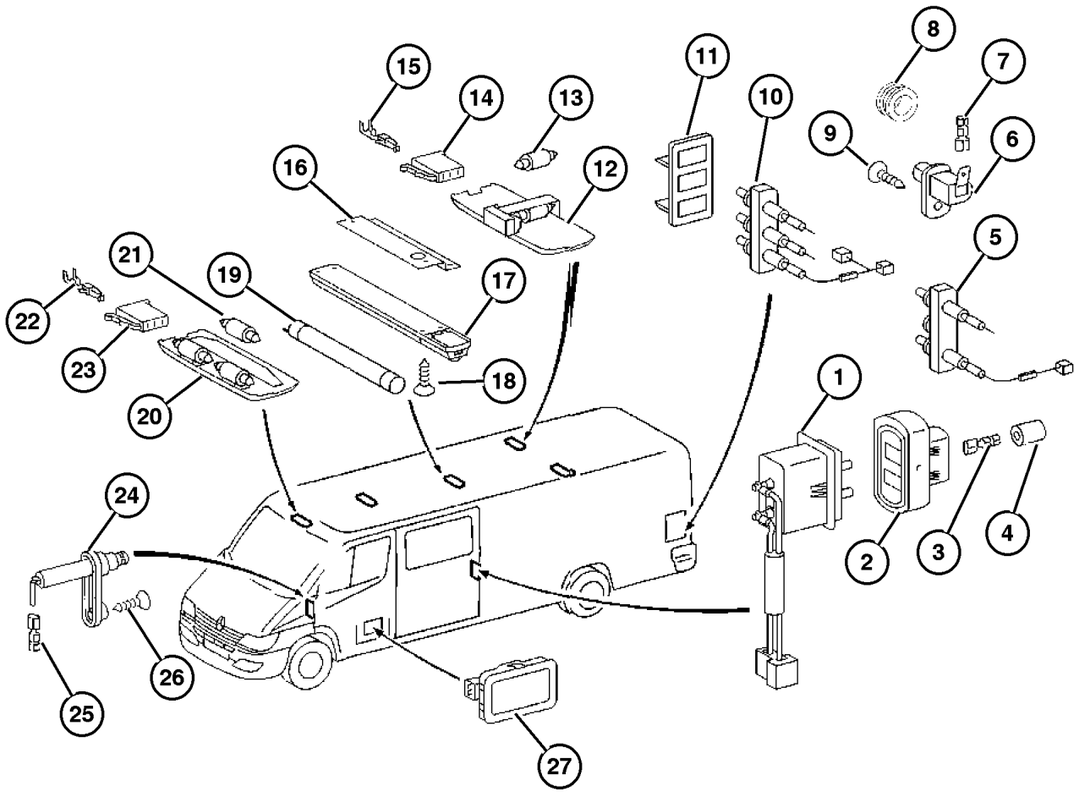

ITEM	PART NUMBER	QTY	LINE	SERIES	BODY	ENGINE	TRANS	TRIM	DESCRIPTION
		3	2, 6	L	51, 52, 54, 55, 56	EX8	DGZ		
		3	3, 7	L	12, 15, 16	EX8	DGZ		
11									CONTACT, Power Door Lock
	5104 465AA	3	2, 6	L	11, 12, 14, 15, 16	EX8	DGZ		
		3	2, 6	L	51, 52, 54, 55, 56	EX8	DGZ		
		3	3, 7	L	12, 15, 16	EX8	DGZ		
12									LAMP, Cargo
	5104 459AA	1	2, 6	L	01, 02, 06	EX8	DGZ		
		1	2, 6	L	11, 12, 14, 15, 16	EX8	DGZ		
		3	2, 6	L	12, 15	EX8	DGZ		
		1	2, 6	L	16	EX8	DGZ		
		2	2, 6	L	51, 52, 54, 55	EX8	DGZ		
		1	3, 7	L	02, 06	EX8	DGZ		
		1	3, 7	L	12, 15, 16	EX8	DGZ		
13									BULB
	5104 645AA	1	2, 6	L	01, 02, 06	EX8	DGZ		
		1	2, 6	L	11, 12, 14, 15, 16	EX8	DGZ		
		3	2, 6	L	12, 15	EX8	DGZ		
		1	2, 6	L	51, 52, 54, 55, 56	EX8	DGZ		
		1	3, 7	L	02, 06	EX8	DGZ		
		1	3, 7	L	12, 15, 16	EX8	DGZ		
14									CONNECTOR
	5120 545AA	1	2, 6	L	01, 02, 06	EX8	DGZ		

Refer to Model Legend Information Bookmark

AR = Use as required - = Non illustrated part # = New this model year

March 3, 2006

Lamps Interior Cargo Van
Figure 008-1125

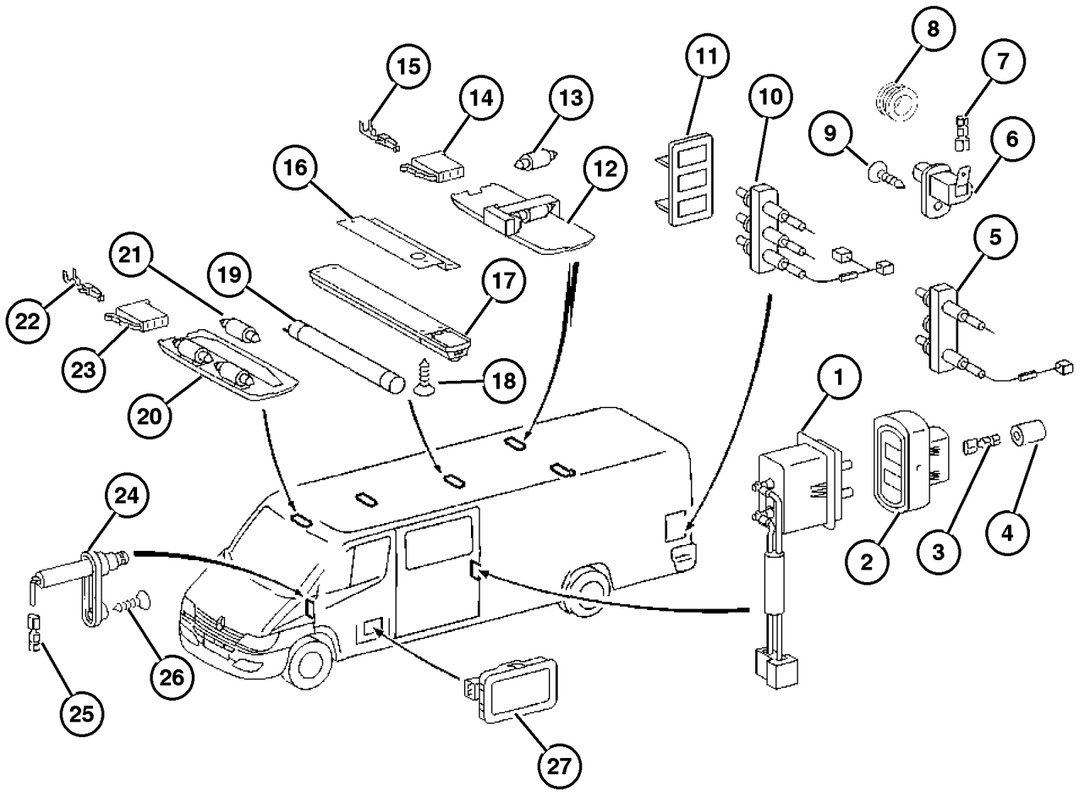

ITEM	PART NUMBER	QTY	LINE	SERIES	BODY	ENGINE	TRANS	TRIM	DESCRIPTION
		1	2, 6	L	11, 12, 14, 15, 16	EX8	DGZ		
		1	2, 6	L	51, 52, 54, 55, 56	EX8	DGZ		
		1	3, 7	L	02, 06	EX8	DGZ		
		1	3, 7	L	12, 15, 16	EX8	DGZ		
15									TERMINAL
	5103 881AA	99	2, 6	L	01, 02, 06	EX8	DGZ		
		99	2, 6	L	11, 12, 14, 15, 16	EX8	DGZ		
		99	2, 6	L	51, 52, 54, 55, 56	EX8	DGZ		
		99	3, 7	L	02, 06	EX8	DGZ		
		99	3, 7	L	12, 15, 16	EX8	DGZ		
16									BRACKET
	5121 426AA	1	2, 6	L	15	EX8	DGZ		
		1	3, 7	L	15	EX8	DGZ		
17									LAMP, Cargo
	5103 764AA	1	2, 6	L	11, 12, 14, 15, 16	EX8	DGZ		
		1	3, 7	L	12, 15, 16	EX8	DGZ		
18									SCREW
	6104 527AA	4	2, 6	L	11, 12, 14, 15, 16	EX8	DGZ		
		4	3, 7	L	12, 15, 16	EX8	DGZ		
19									BULB, 12V 8W
	5133 563AA	1	2, 6	L	11, 12, 14, 15, 16	EX8	DGZ		
		99	3, 7	L	12, 15, 16	EX8	DGZ		
20									LAMP, Dome
	5133 561AA	1	2, 6	L	01, 02, 06	EX8	DGZ		

Refer to Model Legend Information Bookmark

Lamps Interior Cargo Van
Figure 008-1125

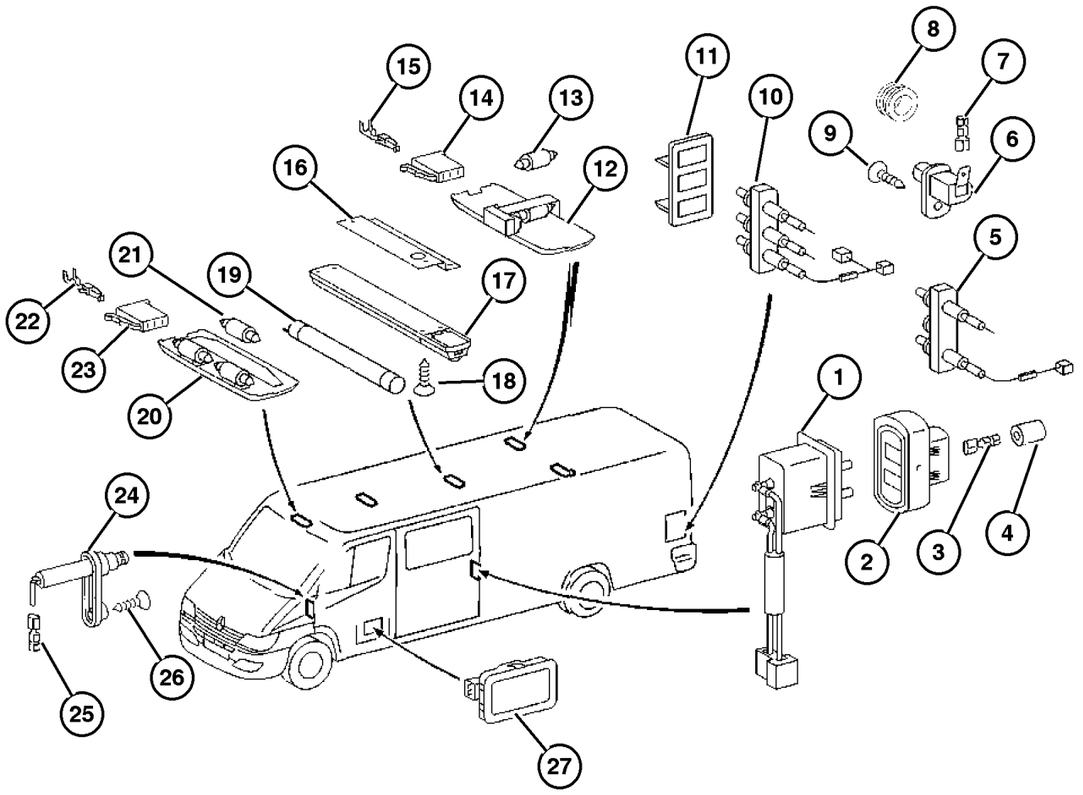

ITEM	PART NUMBER	QTY	LINE	SERIES	BODY	ENGINE	TRANS	TRIM	DESCRIPTION
		1	2, 6	L	11, 12, 14, 15, 16	EX8	DGZ		
		1	2, 6	L	51, 52, 54, 55, 56	EX8	DGZ		
		1	3, 7	L	02, 06	EX8	DGZ		
		1	3, 7	L	12, 15, 16	EX8	DGZ		
21									BULB, 12V 10W
	5096 967AA	2	2, 6	L	01, 02, 06	EX8	DGZ		
		2	2, 6	L	11, 12, 14, 15, 16	EX8	DGZ		
		2	2, 6	L	51, 52, 54, 55, 56	EX8	DGZ		
		2	3, 7	L	02, 06	EX8	DGZ		
		2	3, 7	L	12, 15, 16	EX8	DGZ		
22									TERMINAL
	5103 882AA	99	2, 6	L	01, 02, 06	EX8	DGZ		
		99	2, 6	L	11, 12, 14, 15, 16	EX8	DGZ		
		99	2, 6	L	51, 52, 54, 55, 56	EX8	DGZ		
		99	3, 7	L	02, 06	EX8	DGZ		
		99	3, 7	L	12, 15, 16	EX8	DGZ		
23									CONNECTOR
	5120 545AA	1	3, 7	L	02, 06	EX8	DGZ		
		1	3, 7	L	12, 15, 16	EX8	DGZ		
24									SWITCH, Door Ajar
	5103 861AA	2	2, 6	L	01, 02, 06	EX8	DGZ		
		2	2, 6	L	11, 12, 14, 15, 16	EX8	DGZ		

Refer to Model Legend Information Bookmark

Lamps Interior Cargo Van
Figure 008-1125

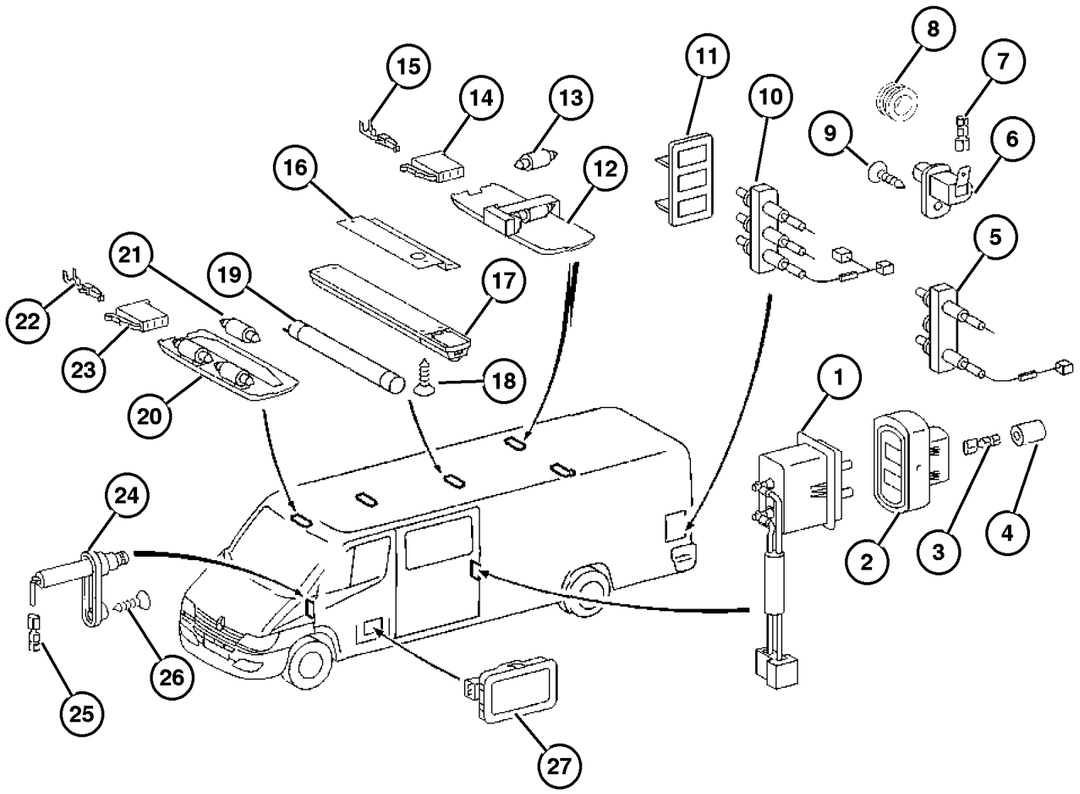

ITEM	PART NUMBER	QTY	LINE	SERIES	BODY	ENGINE	TRANS	TRIM	DESCRIPTION
		2	2, 6	L	51, 52, 54, 55, 56	EX8	DGZ		
		2	3, 7	L	02, 06	EX8	DGZ		
25									TERMINAL, Female
	5103 871AA	99	2, 6	L	01, 02, 06	EX8	DGZ		
		99	2, 6	L	51, 52, 54, 55, 56	EX8	DGZ		
		99	3, 7	L	12, 15, 16	EX8	DGZ		
26									SCREW
	5126 106AA	2	2, 6	L	01, 02, 06	EX8	DGZ		
		2	2, 6	L	11, 12, 14, 15, 16	EX8	DGZ		
		2	2, 6	L	51, 52, 54, 55, 56	EX8	DGZ		
		2	3, 7	L	02, 06	EX8	DGZ		
		2	3, 7	L	12, 15, 16	EX8	DGZ		
27									LAMP, Courtesy
	5103 765AA	2	2, 6	L	01, 02, 06	EX8	DGZ		
		2	2, 6	L	11, 12, 14, 15, 16	EX8	DGZ		
		2	2, 6	L	51, 52, 54, 55, 56	EX8	DGZ		
		2	3, 7	L	02, 06	EX8	DGZ		
		2	3, 7	L	12, 15, 16	EX8	DGZ		

Refer to Model Legend Information Bookmark

BULB SPECIFICATIONS

LAMP	BULB
Backup	P21W - 12V 21W (1)
Brake & Rear Park	P21/5W - 12V 21/5W (1)
Center High Mounted Stop	P21W - 12V 21W (1)
Clearance	W3W - 12V 3W
Front Fog	H1 - 12V 55W (3)
Front Position	W5W - 12V 5W (6)
Front Turn, Park & Side Marker	3457 NA - 12V 28/7.5W Amber Glass (2) (5)
Low Beam Headlamp	H7 - 12V 55W (4)
High Beam Headlamp	H1 - 12V 55W (3)
License Plate	C5W - 12V 5W (8)
Rear Side Marker	R5W - 12V 5W (9)
Rear Turn	P21W - 12V 21W (10)
Side Repeater	W5W - 12V 3W (11)

LAMP	BULB
Cargo/Dome Lamp	K - 12V 18W (7)
Dome/Reading Lamp	K - 12V 10W (12)
Dome Lamp w/Intrusion Sensor	K - 12V 6W
Entry/Exit Lamp	W5W - 12V 5W (13)

ITEM	PART NUMBER	QTY	LINE	SERIES	BODY	ENGINE	TRANS	TRIM	DESCRIPTION
1									BULB
	5104 646AA	6	2, 6	L	01, 02, 06	EX8	DGZ		
		4	2, 6	L	11, 12, 14, 15, 16	EX8	DGZ		
		4	2, 6	L	51, 52, 54, 55, 56	EX8	DGZ		
		6	3, 7	L	02, 06	EX8	DGZ		
		4	3, 7	L	12, 15, 16	EX8	DGZ		
2									BULB, 12V 5W
	5104 608AA	2	2, 6	L	01, 02, 06	EX8	DGZ		
		2	2, 6	L	11, 12, 14, 15, 16	EX8	DGZ		
		2	2, 6	L	51, 52, 54, 55, 56	EX8	DGZ		
		2	3, 7	L	02, 06	EX8	DGZ		
		2	3, 7	L	12, 15, 16	EX8	DGZ		
3									BULB, Fog Lamp, 12V 55W
	5104 682AA	99	2, 6	L	01, 02, 06	EX8	DGZ		
		99	2, 6	L	11, 12, 14, 15, 16	EX8	DGZ		
		99	2, 6	L	51, 52, 54, 55, 56	EX8	DGZ		
		2	3, 7	L	02, 06	EX8	DGZ		
		2	3, 7	L	12, 15, 16	EX8	DGZ		
4									BULB, Headlamp, H-7
	5104 684AA	2	2, 6	L	01, 02, 06	EX8	DGZ		
		2	2, 6	L	11, 12, 14, 15, 16	EX8	DGZ		
		2	2, 6	L	51, 52, 54, 55, 56	EX8	DGZ		

Refer to Model Legend Information Bookmark

BULB SPECIFICATIONS

LAMP	BULB
Backup	P21W - 12V 21W (1)
Brake & Rear Park	P21/5W - 12V 21/5W (1)
Center High Mounted Stop	P21W - 12V 21W (1)
Clearance	W3W - 12V 3W
Front Fog	H1 - 12V 55W (3)
Front Position	W5W - 12V 5W (6)
Front Turn, Park & Side Marker	3457 NA - 12V 28/7.5W Amber Glass (2) (5)
Low Beam Headlamp	H7 - 12V 55W (4)
High Beam Headlamp	H1 - 12V 55W (3)
License Plate	C5W - 12V 5W (8)
Rear Side Marker	R5W - 12V 5W (9)
Rear Turn	P21W - 12V 21W (10)
Side Repeater	W5W - 12V 3W (11)

LAMP	BULB
Cargo/Dome Lamp	K - 12V 18W (7)
Dome/Reading Lamp	K - 12V 10W (12)
Dome Lamp w/Intrusion Sensor	K - 12V 6W
Entry/Exit Lamp	W5W - 12V 5W (13)

ITEM	PART NUMBER	QTY	LINE	SERIES	BODY	ENGINE	TRANS	TRIM	DESCRIPTION
		2	3, 7	L	02, 06	EX8	DGZ		
		2	3, 7	L	12, 15, 16	EX8	DGZ		
5									BULB, TAIL LAMP
	5104 647AA	2	2, 6	L	11, 12, 14, 15, 16	EX8	DGZ		
		2	2, 6	L	51, 52, 54, 55, 56	EX8	DGZ		
		2	3, 7	L	12, 15, 16	EX8	DGZ		
6									BULB, 12V 5W
	5104 648AA	3	2, 6	L	01, 02, 06	EX8	DGZ		
		3	3, 7	L	02, 06	EX8	DGZ		
7									BULB
	5104 645AA	1	2, 6	L	01, 02, 06	EX8	DGZ		
		1	2, 6	L	11, 12, 14, 15, 16	EX8	DGZ		
		3	2, 6	L	12, 15	EX8	DGZ		
		1	2, 6	L	16	EX8	DGZ		
		1	2, 6	L	51, 52, 54, 55, 56	EX8	DGZ		
		3	2, 6	L	52, 55	EX8	DGZ		
		1	2, 6	L	56	EX8	DGZ		
		1	3, 7	L	02, 06	EX8	DGZ		
		1	3, 7	L	12, 15, 16	EX8	DGZ		
8									BULB
	5104 649AA	6	2, 6	L	01, 02, 06	EX8	DGZ		
		2	2, 6	L	11, 12, 14, 15, 16	EX8	DGZ		
		2	2, 6	L	51, 52, 54, 55, 56	EX8	DGZ		
		6	3, 7	L	02, 06	EX8	DGZ		
		2	3, 7	L	12, 15, 16	EX8	DGZ		
9									BULB, 12V 5W

Refer to Model Legend Information Bookmark

AR = Use as required - = Non illustrated part # = New this model year

March 3, 2006

BULB SPECIFICATIONS

LAMP	BULB
Backup	P21W - 12V 21W (1)
Brake & Rear Park	P21/5W - 12V 21/5W (1)
Center High Mounted Stop	P21W - 12V 21W (1)
Clearance	W3W - 12V 3W
Front Fog	H1 - 12V 55W (3)
Front Position	W5W - 12V 5W (6)
Front Turn, Park & Side Marker	3457 NA - 12V 28/7.5W Amber Glass (2) (5)
Low Beam Headlamp	H7 - 12V 55W (4)
High Beam Headlamp	H1 - 12V 55W (3)
License Plate	C5W - 12V 5W (8)
Rear Side Marker	R5W - 12V 5W (9)
Rear Turn	P21W - 12V 21W (10)
Side Repeater	W5W - 12V 3W (11)

LAMP	BULB
Cargo/Dome Lamp	K - 12V 18W (7)
Dome/Reading Lamp	K - 12V 10W (12)
Dome Lamp w/Intrusion Sensor	K - 12V 6W
Entry/Exit Lamp	W5W - 12V 5W (13)

ITEM	PART NUMBER	QTY	LINE	SERIES	BODY	ENGINE	TRANS	TRIM	DESCRIPTION
	5104 608AA	2	2, 6	L	01, 02, 06	EX8	DGZ		
		2	2, 6	L	11, 12, 14, 15, 16	EX8	DGZ		
		2	2, 6	L	51, 52, 54, 55, 56	EX8	DGZ		
		2	3, 7	L	02, 06	EX8	DGZ		
		2	3, 7	L	12, 15, 16	EX8	DGZ		
10									BULB
	5104 646AA	6	2, 6	L	01, 02, 06	EX8	DGZ		
		4	2, 6	L	11, 12, 14, 15, 16	EX8	DGZ		
		4	2, 6	L	51, 52, 54, 55, 56	EX8	DGZ		
11									BULB, 12V 5W
	5126 194AA	2	2, 6	L	01, 02, 06	EX8	DGZ		
		2	2, 6	L	11, 12, 14, 15, 16	EX8	DGZ		
		2	2, 6	L	51, 52, 54, 55, 56	EX8	DGZ		
		2	3, 7	L	02, 06	EX8	DGZ		
		2	3, 7	L	12, 15, 16	EX8	DGZ		
12									BULB, 12V 10W
	5096 967AA	2	2, 6	L	01, 02, 06	EX8	DGZ		
		2	2, 6	L	11, 12, 14, 15, 16	EX8	DGZ		
		2	2, 6	L	51, 52, 54, 55, 56	EX8	DGZ		
		2	3, 7	L	02, 06	EX8	DGZ		
		2	3, 7	L	12, 15, 16	EX8	DGZ		
13									BULB, 12V 8W

Refer to Model Legend Information Bookmark

BULB SPECIFICATIONS

LAMP	BULB
Backup	P21W - 12V 21W (1)
Brake & Rear Park	P21/5W - 12V 21/5W (1)
Center High Mounted Stop	P21W - 12V 21W (1)
Clearance	W3W - 12V 3W
Front Fog	H1 - 12V 55W (3)
Front Position	W5W - 12V 5W (6)
Front Turn, Park & Side Marker	3457 NA - 12V 28/7.5W Amber Glass (2) (5)
Low Beam Headlamp	H7 - 12V 55W (4)
High Beam Headlamp	H1 - 12V 55W (3)
License Plate	C5W - 12V 5W (8)
Rear Side Marker	R5W - 12V 5W (9)
Rear Turn	P21W - 12V 21W (10)
Side Repeater	W5W - 12V 3W (11)

LAMP	BULB
Cargo/Dome Lamp	K - 12V 18W (7)
Dome/Reading Lamp	K - 12V 10W (12)
Dome Lamp w/Intrusion Sensor	K - 12V 6W
Entry/Exit Lamp	W5W - 12V 5W (13)

ITEM	PART NUMBER	QTY	LINE	SERIES	BODY	ENGINE	TRANS	TRIM	DESCRIPTION
	5133 563AA	1	2, 6	L	11, 12, 14, 15, 16	EX8	DGZ		
		99	3, 7	L	12, 15, 16	EX8	DGZ		
-14	5175 563AB-	1		L					BULB KIT, DESIGNATION: BOX H7 H1 ~~CONTENTS 1 PC EACH ~~64210 LONGLIFE H7 L0000000H7~~64150 LONGLIFE H1 05104682AA~~7507 PY21W 05104662AA

Refer to Model Legend Information Bookmark

Wiring - Engine
Figure 008-1205

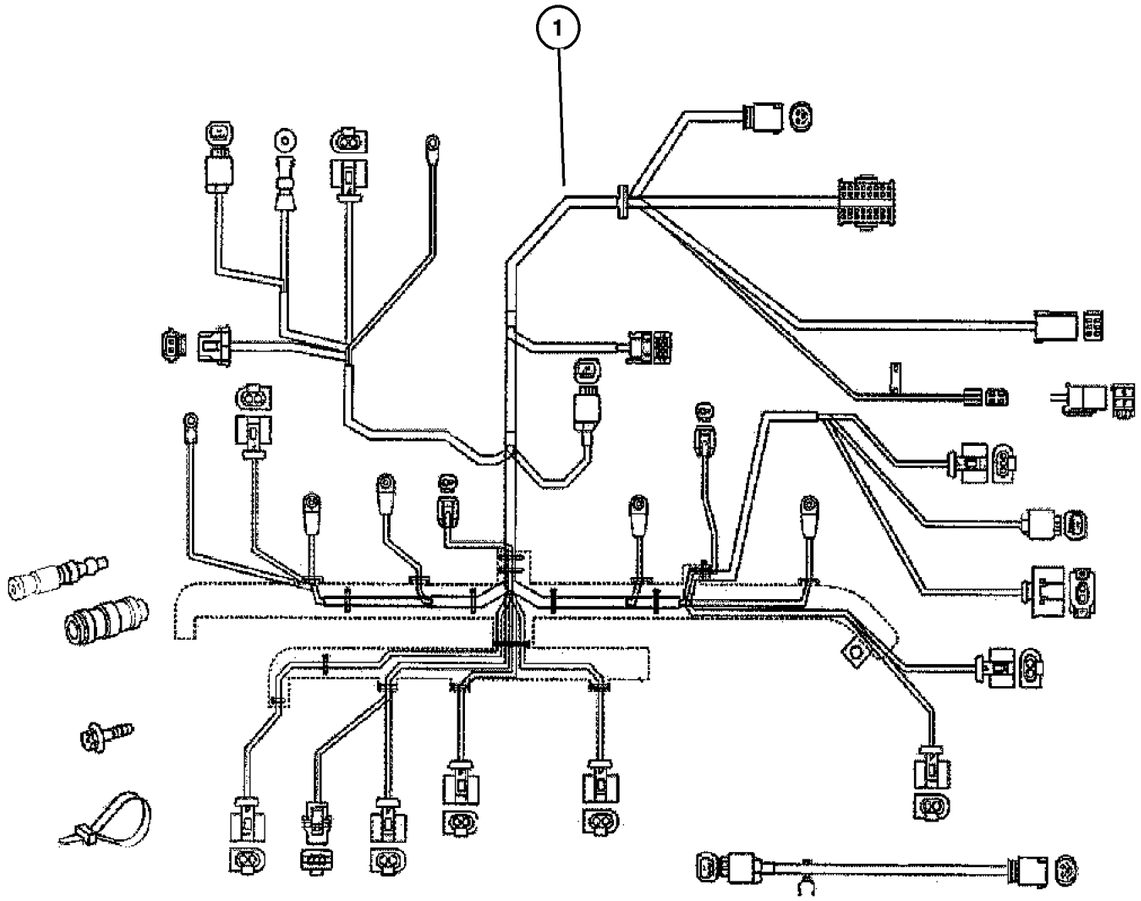

ITEM	PART NUMBER	QTY	LINE	SERIES	BODY	ENGINE	TRANS	TRIM	DESCRIPTION
1	5120 167AA	1	2, 3, 6, 7	L		EX8	DGZ		WIRING, Engine
-2									TERMINAL
	5103 881AA-	99	2, 6	L	01, 02, 06	EX8	DGZ		
		99	2, 6	L	11, 12, 14, 15, 16	EX8	DGZ		
		99	2, 6	L	51, 52, 54, 55, 56	EX8	DGZ		
		99	3, 7	L	02, 06	EX8	DGZ		
		99	3, 7	L	12, 15, 16	EX8	DGZ		
-3									CONNECTOR, Wiring
	5133 396AA-	1	2, 6	L	01, 02, 06	EX8	DGZ		
		1	2, 6	L	11, 12, 14, 15, 16	EX8	DGZ		
		1	2, 6	L	51, 52, 54, 55, 56	EX8	DGZ		
		1	3, 7	L	02, 06	EX8	DGZ		
		1	3, 7	L	12, 15, 16	EX8	DGZ		
-4									CONNECTOR
	5103 753AA-	99	2, 6	L	01, 02, 06	EX8	DGZ		
		99	2, 6	L	11, 12, 14, 15, 16	EX8	DGZ		
		99	2, 6	L	51, 52, 54, 55, 56	EX8	DGZ		
		99	3, 7	L	12, 15, 16	EX8	DGZ		
		1	3, 7	L	02, 06	EX8	DGZ		
-5									TERMINAL, Female
	5114 451AA-	99	2, 6	L	01, 02, 06	EX8	DGZ		
		99	2, 6	L	11, 12, 14, 15, 16	EX8	DGZ		

Refer to Model Legend Information Bookmark

AR = Use as required - = Non illustrated part # = New this model year **March 3, 2006**

« RETURN TO GROUP INDEX »

Wiring - Engine
Figure 008-1205

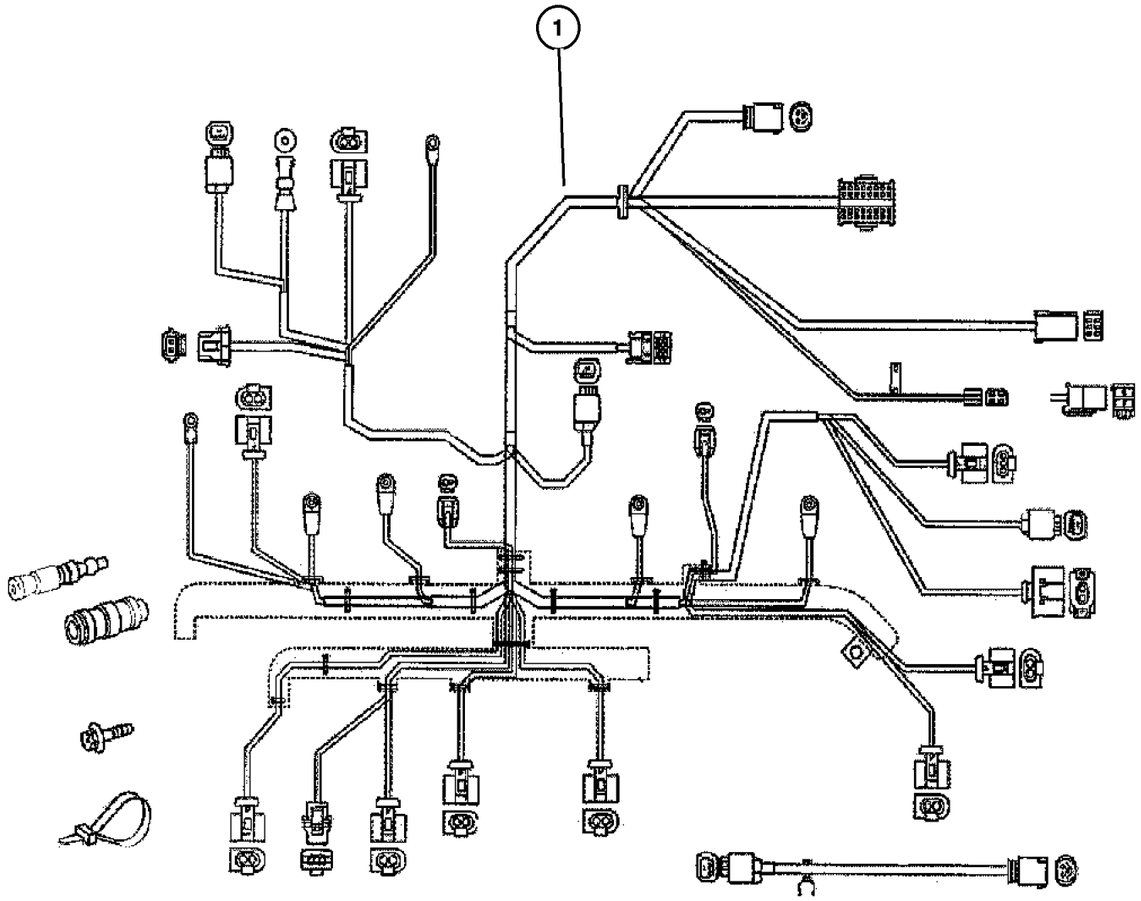

ITEM	PART NUMBER	QTY	LINE	SERIES	BODY	ENGINE	TRANS	TRIM	DESCRIPTION
		99	2, 6	L	51, 52, 54, 55, 56	EX8	DGZ		
		99	3, 7	L	02, 06	EX8	DGZ		
		99	3, 7	L	12, 15, 16	EX8	DGZ		
-6	5135 801AA-	99	2, 3, 6, 7	L		EX8	DGZ		WIRING REPAIR KIT, Diesel Engine

Refer to Model Legend Information Bookmark

AR = Use as required - = Non illustrated part # = New this model year

March 3, 2006

« RETURN TO GROUP INDEX

«

Wiring - Headlamp & Dash
Figure 008-1305

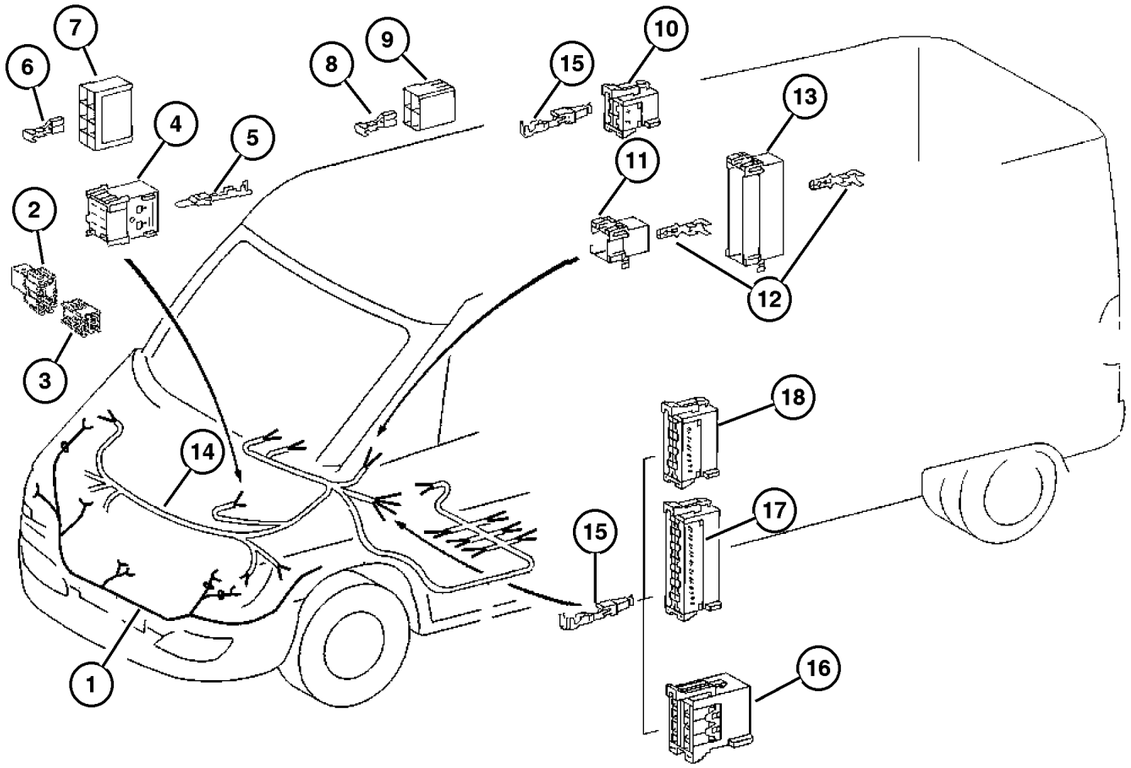

ITEM	PART NUMBER	QTY	LINE	SERIES	BODY	ENGINE	TRANS	TRIM	DESCRIPTION
1									WIRING, Headlamp
	5133 398AA	1	2, 6	L	01, 02, 06	EX8	DGZ		
		1	2, 6	L	11, 12, 14, 15, 16	EX8	DGZ		
		1	2, 6	L	51, 52, 54, 55, 56	EX8	DGZ		
		1	3, 7	L	02, 06	EX8	DGZ		
		1	3, 7	L	12, 15, 16	EX8	DGZ		
2									INSULATOR, 4 Way Male
	5133 397AA	1	2, 6	L	01, 02, 06	EX8	DGZ		
		1	2, 6	L	11, 12, 14, 15, 16	EX8	DGZ		
		1	2, 6	L	51, 52, 54, 55, 56	EX8	DGZ		
		1	3, 7	L	02, 06	EX8	DGZ		
		1	3, 7	L	12, 15, 16	EX8	DGZ		
3									CONNECTOR, Wiring
	5133 396AA	1	2, 6	L	01, 02, 06	EX8	DGZ		
		1	2, 6	L	11, 12, 14, 15, 16	EX8	DGZ		
		1	2, 6	L	51, 52, 54, 55, 56	EX8	DGZ		
		1	3, 7	L	02, 06	EX8	DGZ		
		1	3, 7	L	12, 15, 16	EX8	DGZ		
4									INSULATOR, 6 Way Male
	5133 327AA	1	2, 6	L	01, 02, 06	EX8	DGZ		
		1	2, 6	L	11, 12, 14, 15, 16	EX8	DGZ		
		1	2, 6	L	51, 52, 54, 55, 56	EX8	DGZ		

Refer to Model Legend Information Bookmark

AR = Use as required - = Non illustrated part # = New this model year

March 3, 2006

« RETURN TO GROUP INDEX

»

Wiring - Headlamp & Dash
Figure 008-1305

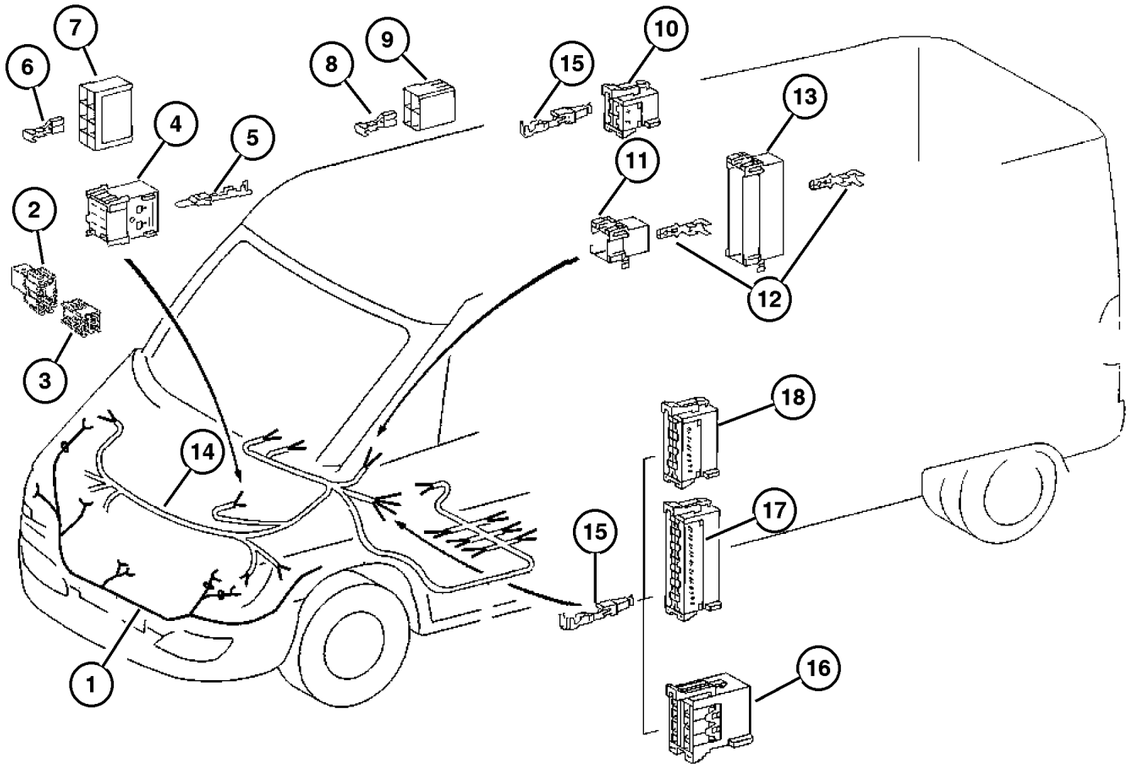

ITEM	PART NUMBER	QTY	LINE	SERIES	BODY	ENGINE	TRANS	TRIM	DESCRIPTION
		1	3, 7	L	02, 06	EX8	DGZ		
		1	3, 7	L	12, 15, 16	EX8	DGZ		
5									TERMINAL, Male
	5103 909AA	1	2, 6	L	01, 02, 06	EX8	DGZ		
		1	2, 6	L	11, 12, 14, 15, 16	EX8	DGZ		
		1	2, 6	L	51, 52, 54, 55, 56	EX8	DGZ		
		1	3, 7	L	02, 06	EX8	DGZ		
		1	3, 7	L	12, 15, 16	EX8	DGZ		
6									TERMINAL, Female
	5133 359AA	1	2, 6	L	01, 02, 06	EX8	DGZ		
		1	2, 6	L	11, 12, 14, 15, 16	EX8	DGZ		
		1	2, 6	L	51, 52, 54, 55, 56	EX8	DGZ		
		1	3, 7	L	02, 06	EX8	DGZ		
		1	3, 7	L	12, 15, 16	EX8	DGZ		
7									CONNECTOR
	5103 752AA	1	2, 6	L	01, 02, 06	EX8	DGZ		
		1	2, 6	L	11, 12, 14, 15, 16	EX8	DGZ		
		1	2, 6	L	51, 52, 54, 55, 56	EX8	DGZ		
		1	3, 7	L	02, 06	EX8	DGZ		
		1	3, 7	L	12, 15, 16	EX8	DGZ		
8									TERMINAL, Female
	5133 360AA	99	2, 6	L	01, 02, 06	EX8	DGZ		
		99	2, 6	L	11, 12, 14, 15, 16	EX8	DGZ		

Refer to Model Legend Information Bookmark

Wiring - Headlamp & Dash
Figure 008-1305

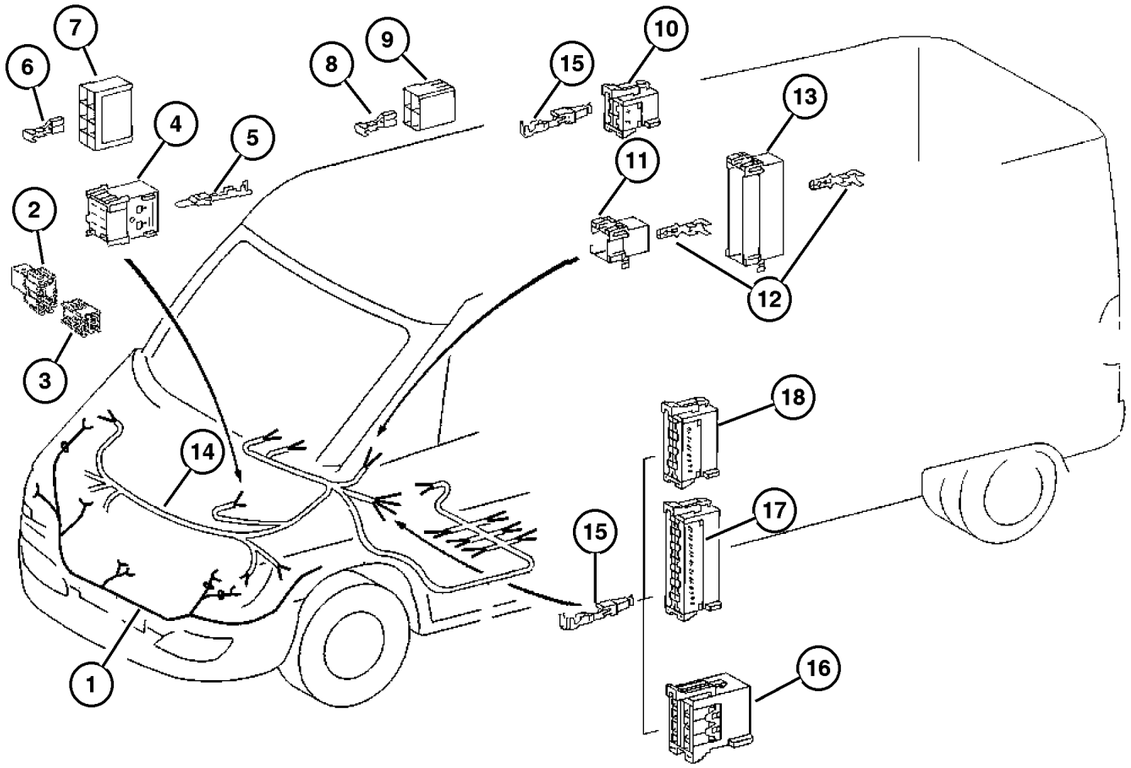

ITEM	PART NUMBER	QTY	LINE	SERIES	BODY	ENGINE	TRANS	TRIM	DESCRIPTION
		99	2, 6	L	51, 52, 54, 55, 56	EX8	DGZ		
		99	3, 7	L	02, 06	EX8	DGZ		
		99	3, 7	L	12, 15, 16	EX8	DGZ		
9	5103 753AA	99	2, 6	L	01, 02, 06	EX8	DGZ		CONNECTOR
		99	2, 6	L	11, 12, 14, 15, 16	EX8	DGZ		
		99	2, 6	L	51, 52, 54, 55, 56	EX8	DGZ		
		99	3, 7	L	02, 06	EX8	DGZ		
		99	3, 7	L	12, 15, 16	EX8	DGZ		
10	5120 785AA	1	2, 6	L	01, 02, 06	EX8	DGZ		CONNECTOR
		1	2, 6	L	11, 12, 14, 15, 16	EX8	DGZ		
		1	2, 6	L	51, 52, 54, 55, 56	EX8	DGZ		
		1	3, 7	L	02, 06	EX8	DGZ		
		1	3, 7	L	12, 15, 16	EX8	DGZ		
11	5120 791AA	1	2, 6	L	01, 02, 06	EX8	DGZ		CONNECTOR
		1	2, 6	L	11, 12, 14, 15, 16	EX8	DGZ		
		1	2, 6	L	51, 52, 54, 55, 56	EX8	DGZ		
		1	3, 7	L	02, 06	EX8	DGZ		
		1	3, 7	L	12, 15, 16	EX8	DGZ		
12	5133 377AA	1	2, 6	L	01, 02, 06	EX8	DGZ		TERMINAL, Male

Refer to Model Legend Information Bookmark

AR = Use as required - = Non illustrated part # = New this model year

March 3, 2006

« RETURN TO GROUP INDEX

Wiring - Headlamp & Dash
Figure 008-1305

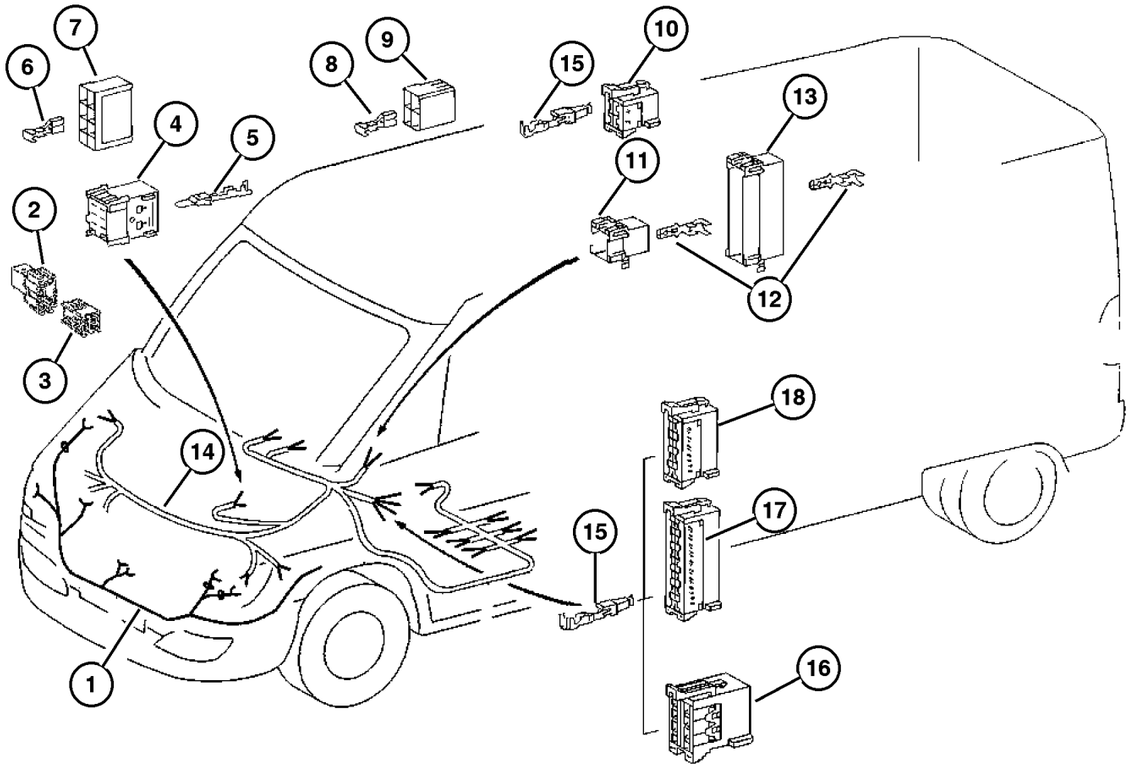

ITEM	PART NUMBER	QTY	LINE	SERIES	BODY	ENGINE	TRANS	TRIM	DESCRIPTION
		1	2, 6	L	11, 12, 14, 15, 16	EX8	DGZ		
		1	2, 6	L	51, 52, 54, 55, 56	EX8	DGZ		
		1	3, 7	L	02, 06	EX8	DGZ		
		1	3, 7	L	12, 15, 16	EX8	DGZ		
13									CONNECTOR
	5120 794AA	1	2, 6	L	01, 02, 06	EX8	DGZ		
		1	2, 6	L	11, 12, 14, 15, 16	EX8	DGZ		
		1	2, 6	L	51, 52, 54, 55, 56	EX8	DGZ		
		1	3, 7	L	02, 06	EX8	DGZ		
		1	3, 7	L	12, 15, 16	EX8	DGZ		
14									WIRING, Headlamp to Dash
	5114 935AA	1	2, 6	L	01, 02, 06	EX8	DGZ		
		1	2, 6	L	11, 12, 14, 15, 16	EX8	DGZ		
		1	2, 6	L	51, 52, 54, 55, 56	EX8	DGZ		
		1	3, 7	L	02, 06	EX8	DGZ		
		1	3, 7	L	12, 15, 16	EX8	DGZ		
15									TERMINAL
	5103 881AA	99	2, 6	L	11, 12, 14, 15, 16	EX8	DGZ		
		99	2, 6	L	51, 52, 54, 55, 56	EX8	DGZ		
		1	2, 6	L	01, 02, 06	EX8	DGZ		
		99	3, 7	L	02, 06	EX8	DGZ		
		99	3, 7	L	12, 15, 16	EX8	DGZ		
16									CONNECTOR

Refer to Model Legend Information Bookmark

AR = Use as required - = Non illustrated part # = New this model year

March 3, 2006

Wiring - Headlamp & Dash
Figure 008-1305

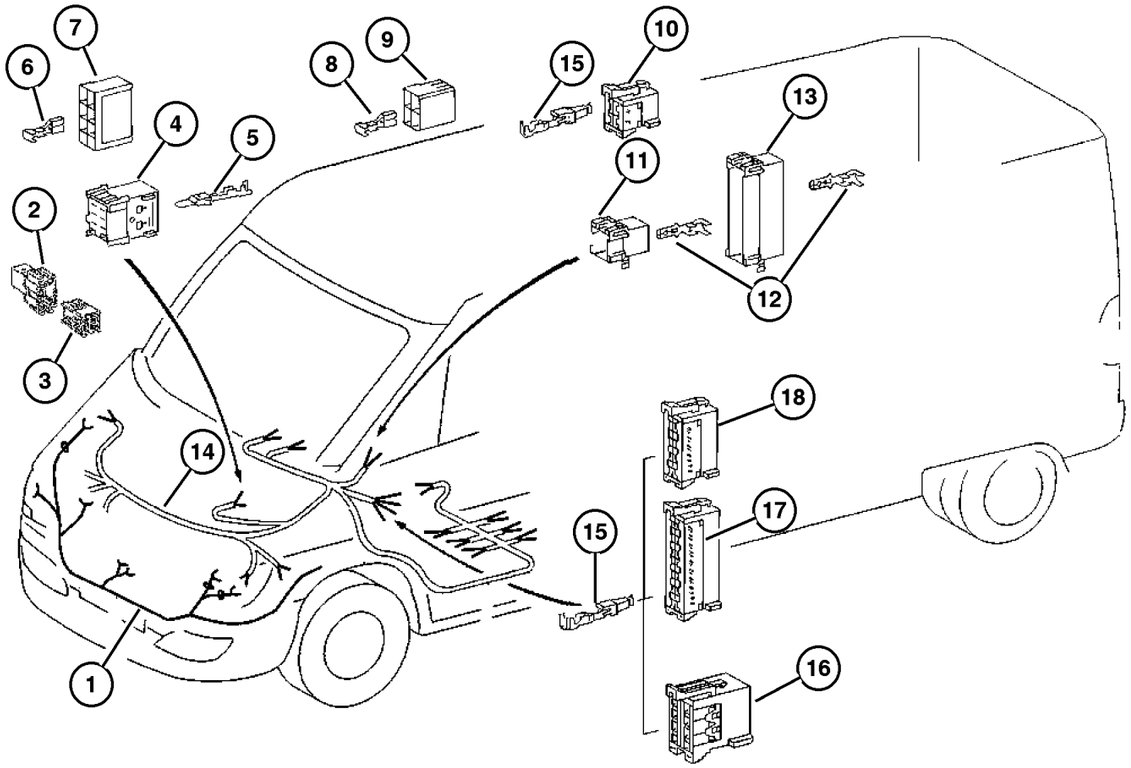

ITEM	PART NUMBER	QTY	LINE	SERIES	BODY	ENGINE	TRANS	TRIM	DESCRIPTION
	5120 796AA	1	2, 6	L	01, 02, 06	EX8	DGZ		
		1	2, 6	L	11, 12, 14, 15, 16	EX8	DGZ		
		1	2, 6	L	51, 52, 54, 55, 56	EX8	DGZ		
		1	3, 7	L	02, 06	EX8	DGZ		
		1	3, 7	L	12, 15, 16	EX8	DGZ		
17									CONNECTOR
	5120 789AA	1	2, 6	L	01, 02, 06	EX8	DGZ		
		1	2, 6	L	11, 12, 14, 15, 16	EX8	DGZ		
		1	2, 6	L	51, 52, 54, 55, 56	EX8	DGZ		
		1	3, 7	L	02, 06	EX8	DGZ		
		1	3, 7	L	12, 15, 16	EX8	DGZ		
18									CONNECTOR
	5120 788AA	1	2, 6	L	01, 02, 06	EX8	DGZ		
		1	2, 6	L	11, 12, 14, 15, 16	EX8	DGZ		
		1	2, 6	L	51, 52, 54, 55, 56	EX8	DGZ		
		1	3, 7	L	02, 06	EX8	DGZ		
		1	3, 7	L	12, 15, 16	EX8	DGZ		

Refer to Model Legend Information Bookmark

AR = Use as required - = Non illustrated part # = New this model year

March 3, 2006

« RETURN TO GROUP INDEX

Wiring - Instrument Panel
Figure 008-1405

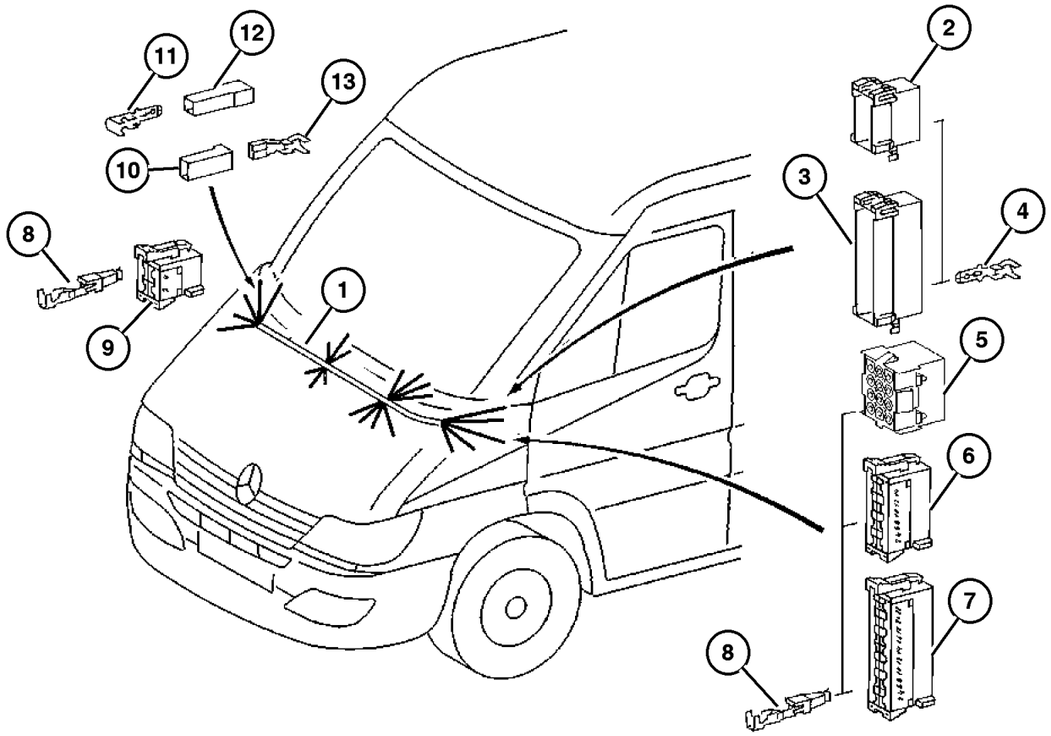

ITEM	PART NUMBER	QTY	LINE	SERIES	BODY	ENGINE	TRANS	TRIM	DESCRIPTION
1									WIRING, Instrument Panel
	5114 933AA	1	2, 6	L	01, 02, 06	EX8	DGZ		
		1	2, 6	L	11, 12, 14, 15, 16	EX8	DGZ		
		1	2, 6	L	51, 52, 54, 55, 56	EX8	DGZ		
		1	3, 7	L	02, 06	EX8	DGZ		
		1	3, 7	L	12, 15, 16	EX8	DGZ		
2									INSULATOR
	5133 393AA	1	2, 6	L	01, 02, 06	EX8	DGZ		
		1	2, 6	L	11, 12, 14, 15, 16	EX8	DGZ		
		1	2, 6	L	51, 52, 54, 55, 56	EX8	DGZ		
		1	3, 7	L	02, 06	EX8	DGZ		
		1	3, 7	L	12, 15, 16	EX8	DGZ		
3									CONNECTOR
	5120 793AA	1	2, 6	L	01, 02, 06	EX8	DGZ		
		1	2, 6	L	11, 12, 14, 15, 16	EX8	DGZ		
		1	2, 6	L	51, 52, 54, 55, 56	EX8	DGZ		
		1	3, 7	L	02, 06	EX8	DGZ		
		1	3, 7	L	12, 15, 16	EX8	DGZ		
4									TERMINAL, Male
	5133 377AA	1	2, 6	L	01, 02, 06	EX8	DGZ		
		1	2, 6	L	11, 12, 14, 15, 16	EX8	DGZ		
		1	2, 6	L	51, 52, 54, 55, 56	EX8	DGZ		

Refer to Model Legend Information Bookmark

AR = Use as required - = Non illustrated part # = New this model year

March 3, 2006

« RETURN TO GROUP INDEX

»

Wiring - Instrument Panel
Figure 008-1405

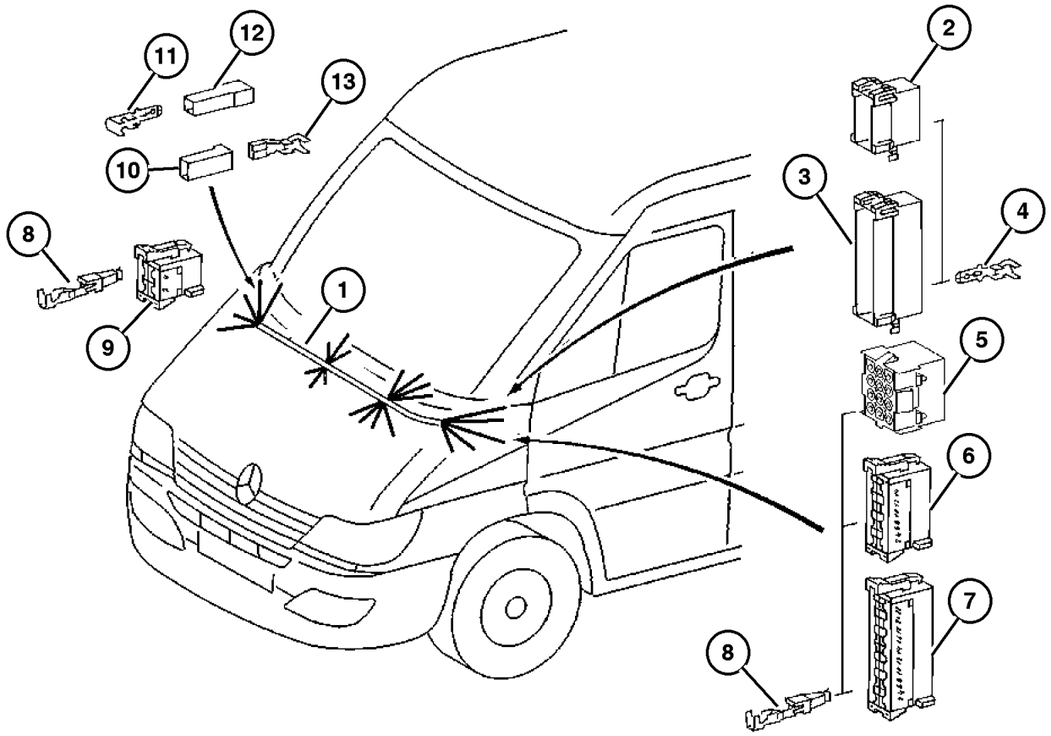

ITEM	PART NUMBER	QTY	LINE	SERIES	BODY	ENGINE	TRANS	TRIM	DESCRIPTION
		1	3, 7	L	02, 06	EX8	DGZ		
		1	3, 7	L	12, 15, 16	EX8	DGZ		
5									CONNECTOR
	5120 675AA	1	2, 6	L	01, 02, 06	EX8	DGZ		
		1	2, 6	L	11, 12, 14, 15, 16	EX8	DGZ		
		1	2, 6	L	51, 52, 54, 55, 56	EX8	DGZ		
		1	3, 7	L	02, 06	EX8	DGZ		
		1	3, 7	L	12, 15, 16	EX8	DGZ		
6									CONNECTOR
	5120 787AA	1	2, 6	L	01, 02, 06	EX8	DGZ		
		1	2, 6	L	11, 12, 14, 15, 16	EX8	DGZ		
		1	2, 6	L	51, 52, 54, 55, 56	EX8	DGZ		
		1	3, 7	L	02, 06	EX8	DGZ		
		1	3, 7	L	12, 15, 16	EX8	DGZ		
7									CONNECTOR
	5120 789AA	1	2, 6	L	01, 02, 06	EX8	DGZ		
		1	2, 6	L	11, 12, 14, 15, 16	EX8	DGZ		
		1	2, 6	L	51, 52, 54, 55, 56	EX8	DGZ		
		1	3, 7	L	02, 06	EX8	DGZ		
		1	3, 7	L	12, 15, 16	EX8	DGZ		
8									TERMINAL
	5103 881AA	99	2, 6	L	01, 02, 06	EX8	DGZ		
		99	2, 6	L	11, 12, 14, 15, 16	EX8	DGZ		

Refer to Model Legend Information Bookmark

Wiring - Instrument Panel
Figure 008-1405

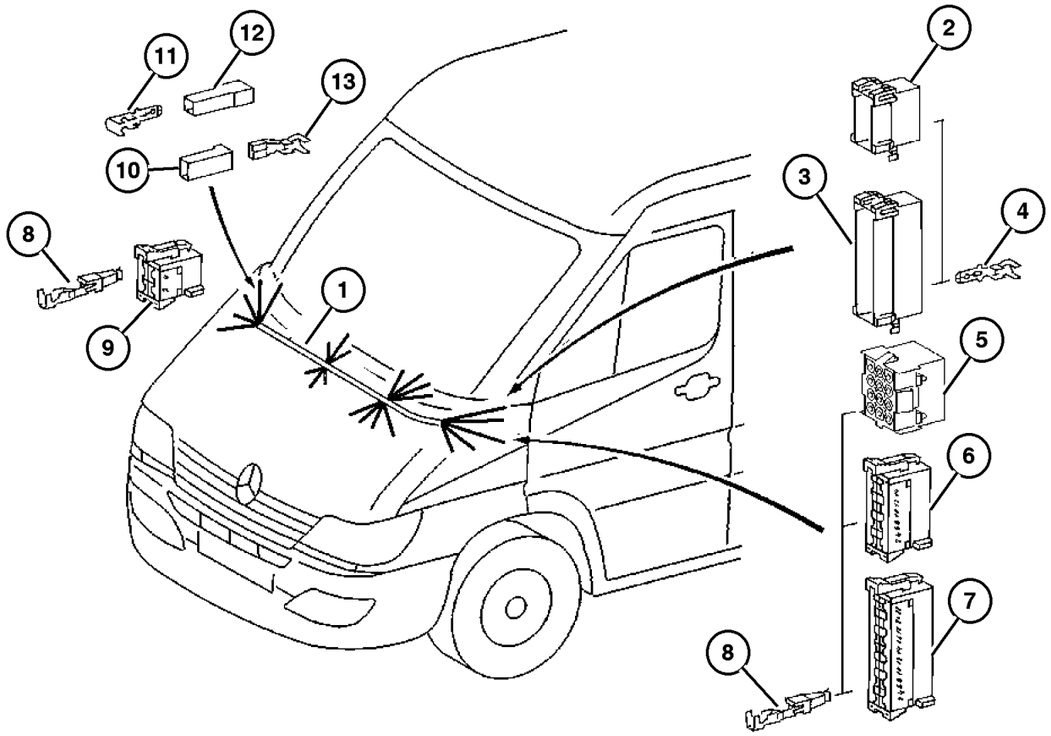

ITEM	PART NUMBER	QTY	LINE	SERIES	BODY	ENGINE	TRANS	TRIM	DESCRIPTION
		99	2, 6	L	51, 52, 54, 55, 56	EX8	DGZ		
		99	3, 7	L	02, 06	EX8	DGZ		
		99	3, 7	L	12, 15, 16	EX8	DGZ		
9	5120 785AA	1	2, 6	L	01, 02, 06	EX8	DGZ		CONNECTOR
		1	2, 6	L	11, 12, 14, 15, 16	EX8	DGZ		
		1	2, 6	L	51, 52, 54, 55, 56	EX8	DGZ		
		1	3, 7	L	02, 06	EX8	DGZ		
		1	3, 7	L	12, 15, 16	EX8	DGZ		
10	5120 684AA	1	2, 6	L	11, 12, 14, 15, 16	EX8	DGZ		CONNECTOR
		1	2, 6	L	51, 52, 54, 55, 56	EX8	DGZ		
		1	2, 6	L	01, 02, 06	EX8	DGZ		
		1	3, 7	L	12, 15, 16	EX8	DGZ		
		1	3, 7	L	02, 06	EX8	DGZ		
11	5133 391AA	99	2, 6	L	01, 02, 06	EX8	DGZ		TERMINAL, Male
		99	2, 6	L	11, 12, 14, 15, 16	EX8	DGZ		
		99	2, 6	L	51, 52, 54, 55, 56	EX8	DGZ		
		99	3, 7	L	02, 06	EX8	DGZ		
		99	3, 7	L	12, 15, 16	EX8	DGZ		
12									INSULATOR

Refer to Model Legend Information Bookmark

Wiring - Instrument Panel
Figure 008-1405

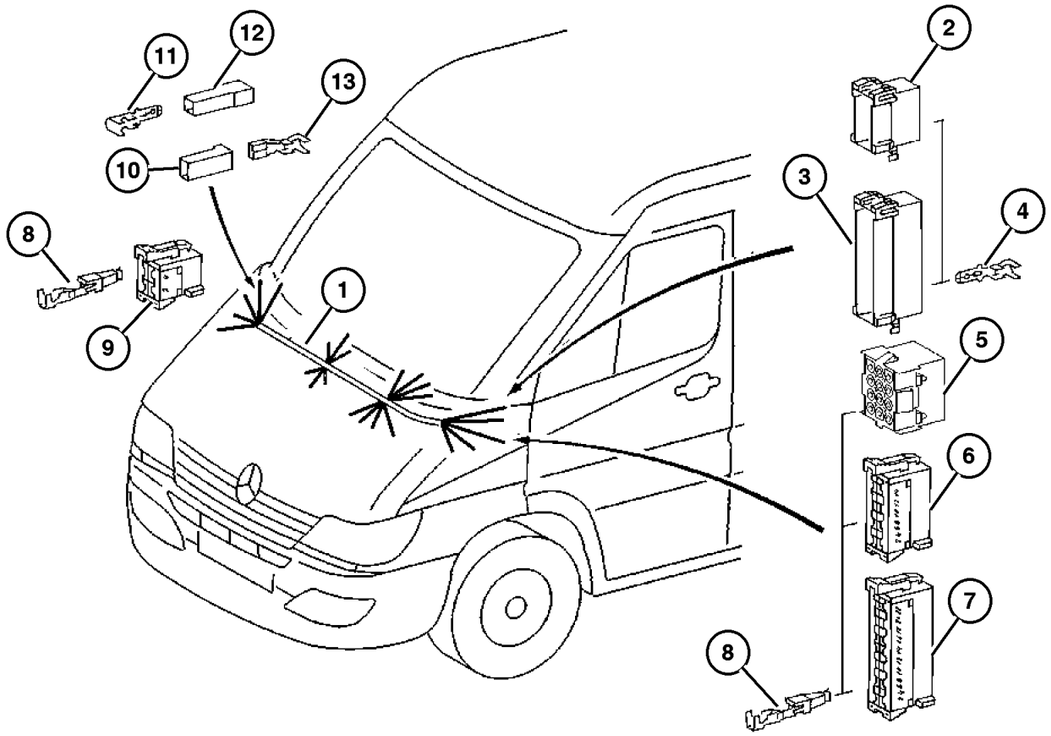

ITEM	PART NUMBER	QTY	LINE	SERIES	BODY	ENGINE	TRANS	TRIM	DESCRIPTION
	5120 685AA	2	2, 6	L	51, 52, 54, 55, 56	EX8	DGZ		
		2	2, 6	L	11, 12, 14, 15, 16	EX8	DGZ		
		1	2, 6	L	01, 02, 06	EX8	DGZ		
		2	3, 7	L	12, 15, 16	EX8	DGZ		
		1	3, 7	L	02, 06	EX8	DGZ		
13									TERMINAL, Female
	5103 871AA	1	2, 6	L	01, 02, 06	EX8	DGZ		
		1	2, 6	L	11, 12, 14, 15, 16	EX8	DGZ		
		1	2, 6	L	51, 52, 54, 55, 56	EX8	DGZ		
		99	3, 7	L	12, 15, 16	EX8	DGZ		
		1	3, 7	L	02, 06	EX8	DGZ		
-14									WIRING, Instrument Panel Jumper
	5133 418AA-	1	2, 6	L	01, 02, 06	EX8	DGZ		Ash tray
		1	2, 6	L	11, 12, 14, 15, 16	EX8	DGZ		Ash tray
		1	2, 6	L	51, 52, 54, 55, 56	EX8	DGZ		Ash tray
		1	3, 7	L	02, 06	EX8	DGZ		Ash tray
		1	3, 7	L	12, 15, 16	EX8	DGZ		Ash tray

Refer to Model Legend Information Bookmark

Wiring - Body & Accessories
Figure 008-1505

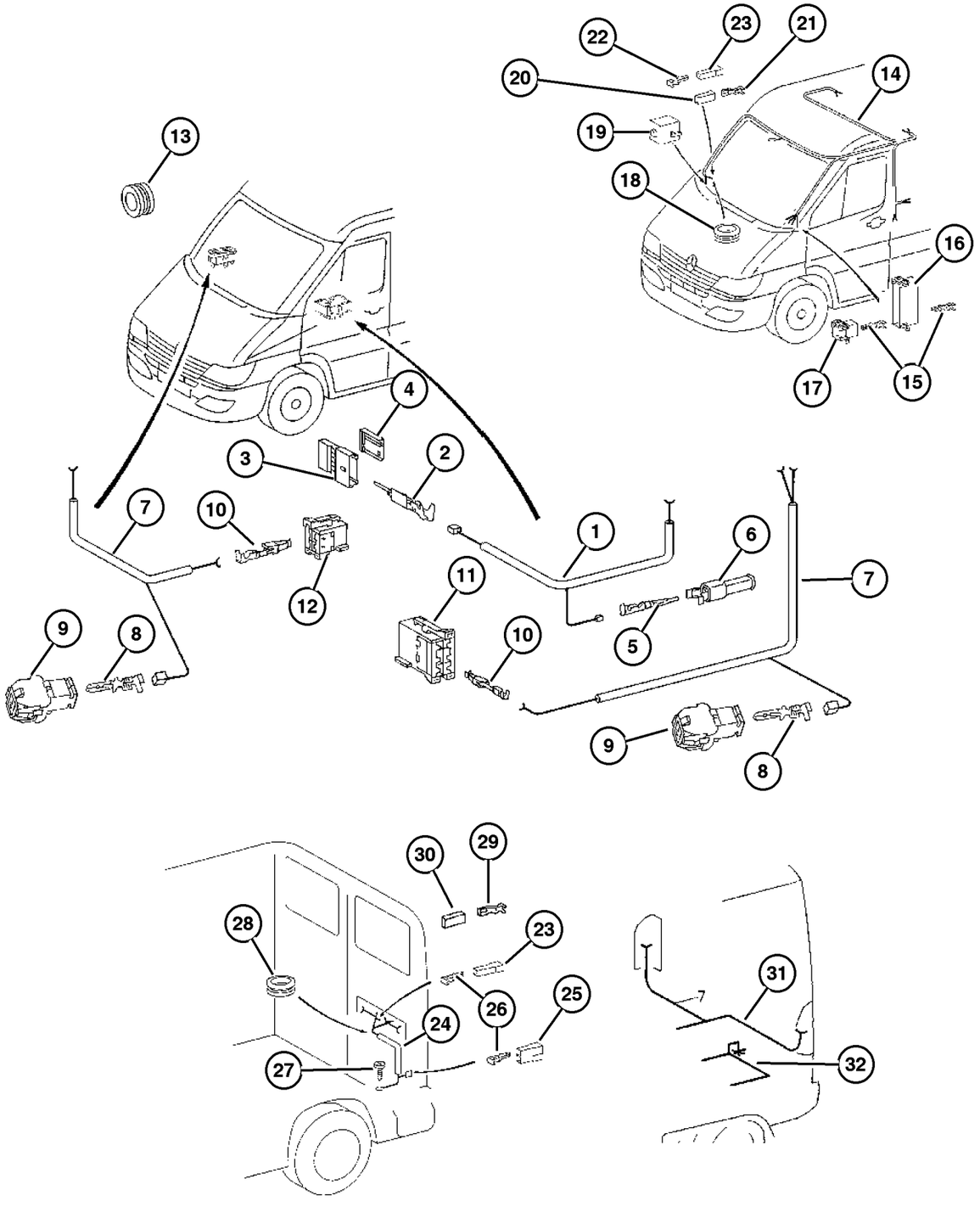

ITEM	PART NUMBER	QTY	LINE	SERIES	BODY	ENGINE	TRANS	TRIM	DESCRIPTION
1									WIRING, Mirror Jumper
	5120 224AA	1	2, 6	L	01, 02, 06	EX8	DGZ		[GTB]
		1	2, 6	L	11, 12, 14, 15, 16	EX8	DGZ		[GTB]
		1	2, 6	L	51, 52, 54, 55, 56	EX8	DGZ		[GTB]
		1	3, 7	L	02, 06	EX8	DGZ		[GTB]
		1	3, 7	L	12, 15, 16	EX8	DGZ		[GTB]
	5133 502AA	1	2, 6	L	01, 02, 06	EX8	DGZ		
		1	2, 6	L	11, 12, 14, 15, 16	EX8	DGZ		
		1	2, 6	L	51, 52, 54, 55, 56	EX8	DGZ		
		1	3, 7	L	02, 06	EX8	DGZ		
		1	3, 7	L	12, 15, 16	EX8	DGZ		
2									TERMINAL, Male
	5133 990AA	99	2, 6	L	01, 02, 06	EX8	DGZ		
		99	2, 6	L	11, 12, 14, 15, 16	EX8	DGZ		
		99	2, 6	L	51, 52, 54, 55, 56	EX8	DGZ		
		99	3, 7	L	02, 06	EX8	DGZ		
		99	3, 7	L	12, 15, 16	EX8	DGZ		
3									INSULATOR, 6 Way
	5133 330AA	1	2, 6	L	01, 02, 06	EX8	DGZ		
		1	2, 6	L	11, 12, 14, 15, 16	EX8	DGZ		
		1	2, 6	L	51, 52, 54, 55, 56	EX8	DGZ		
		1	3, 7	L	02, 06	EX8	DGZ		

Refer to Model Legend Information Bookmark

AR = Use as required - = Non illustrated part # = New this model year

March 3, 2006

« RETURN TO GROUP INDEX

»

Wiring - Body & Accessories
Figure 008-1505

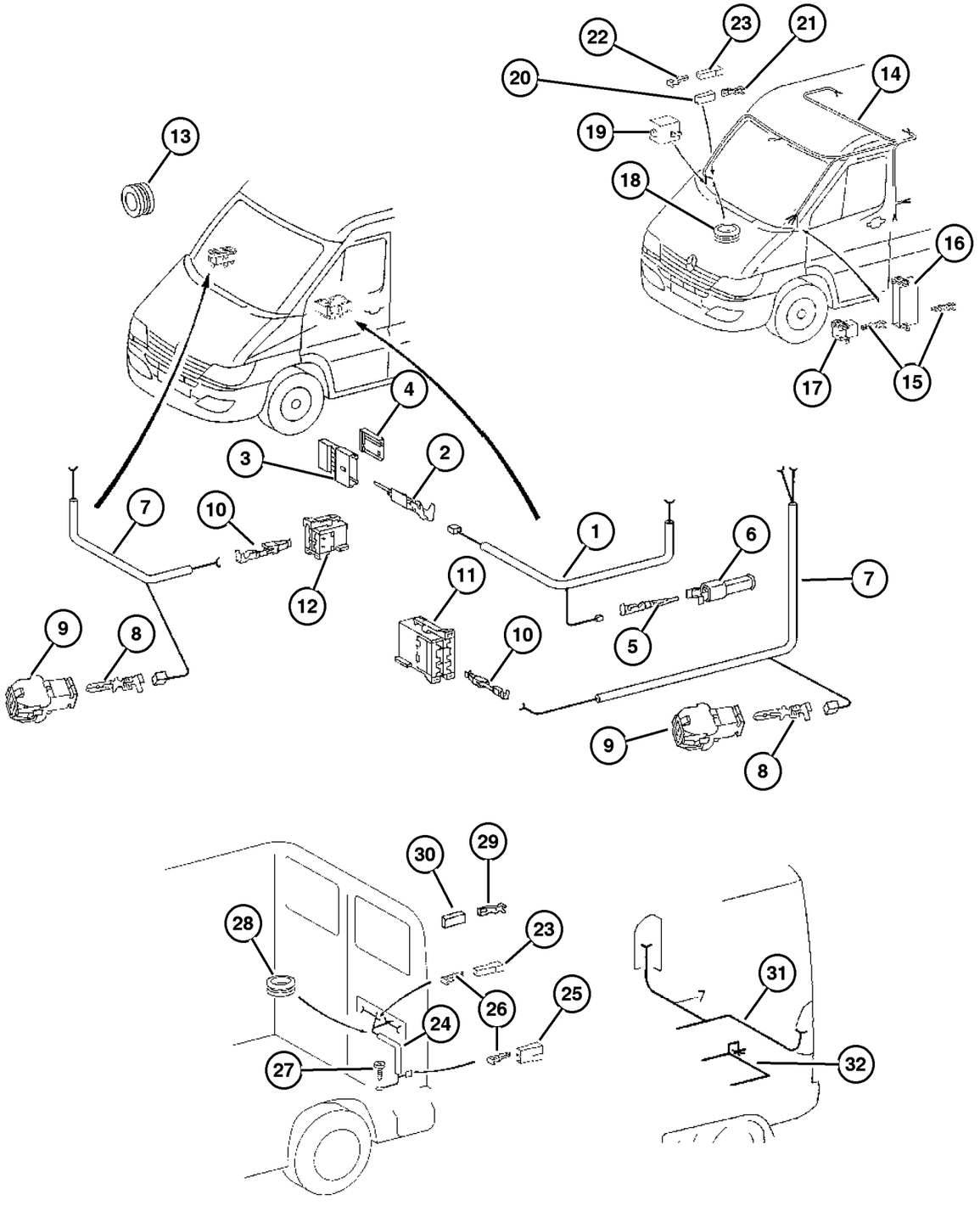

ITEM	PART NUMBER	QTY	LINE	SERIES	BODY	ENGINE	TRANS	TRIM	DESCRIPTION
		1	3, 7	L	12, 15, 16	EX8	DGZ		
4	5133 331AA	1	2, 6	L	01, 02, 06	EX8	DGZ		CONNECTOR, instrument cluster
		1	2, 6	L	11, 12, 14, 15, 16	EX8	DGZ		
		1	2, 6	L	51, 52, 54, 55, 56	EX8	DGZ		
		1	3, 7	L	02, 06	EX8	DGZ		
		1	3, 7	L	12, 15, 16	EX8	DGZ		
5	5133 387AA	5	2, 6	L	01, 02, 06	EX8	DGZ		TERMINAL
		5	2, 6	L	11, 12, 14, 15, 16	EX8	DGZ		
		5	2, 6	L	51, 52, 54, 55, 56	EX8	DGZ		
		5	3, 7	L	02, 06	EX8	DGZ		
		5	3, 7	L	12, 15, 16	EX8	DGZ		
6	5120 744AA	1	2, 6	L	01, 02, 06	EX8	DGZ		CONNECTOR
		1	2, 6	L	11, 12, 14, 15, 16	EX8	DGZ		
		1	2, 6	L	51, 52, 54, 55, 56	EX8	DGZ		
		1	3, 7	L	12, 15, 16	EX8	DGZ		
		1	3, 7	L	02, 06	EX8	DGZ		
7	5120 220AA	1	2, 6	L	01, 02, 06	EX8	DGZ		WIRING, Power Window Drivers Side
		1	2, 6	L	11, 12, 14, 15, 16	EX8	DGZ		Drivers Side

Refer to Model Legend Information Bookmark

AR = Use as required - = Non illustrated part # = New this model year

March 3, 2006

« RETURN TO GROUP INDEX

Wiring - Body & Accessories
Figure 008-1505

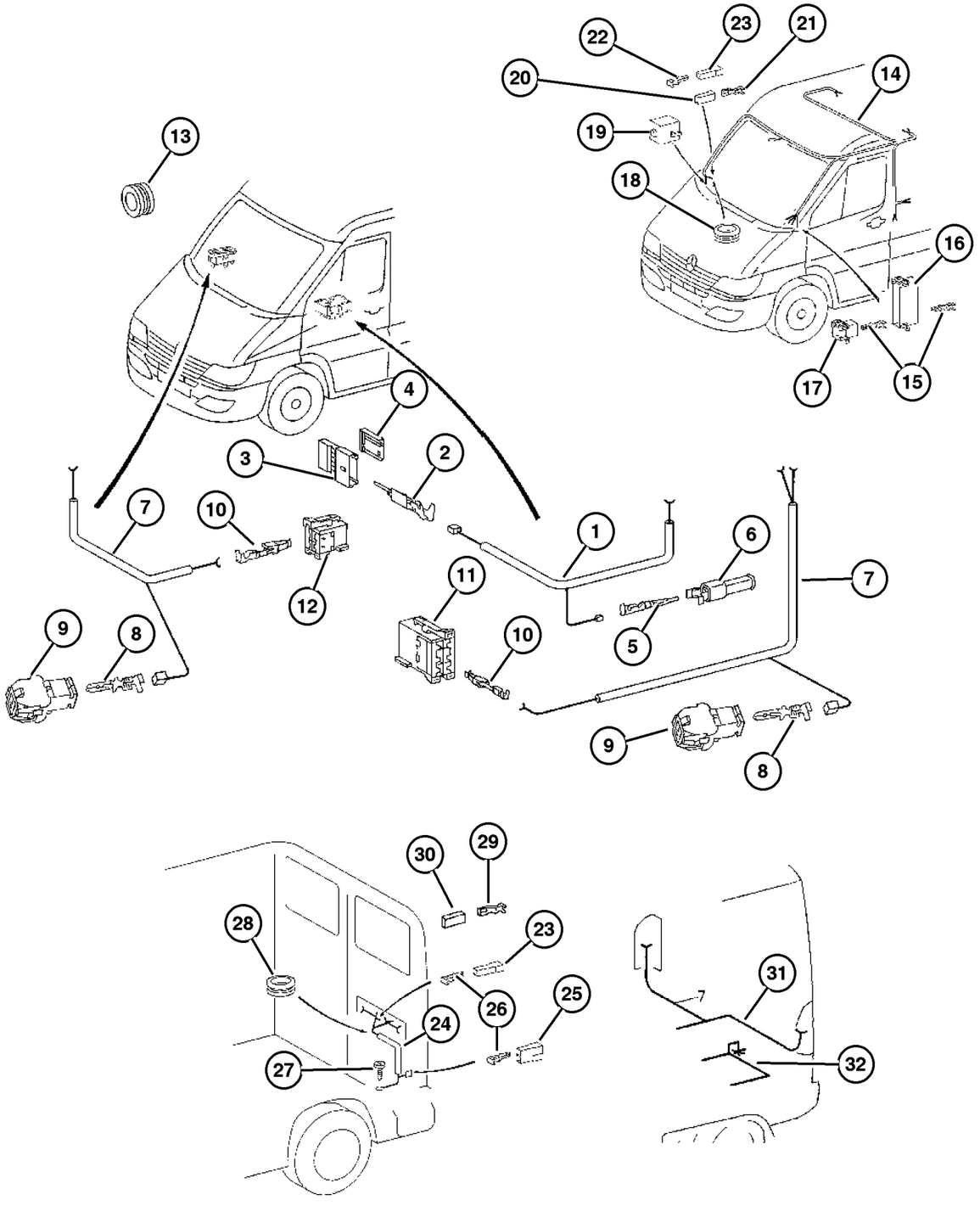

ITEM	PART NUMBER	QTY	LINE	SERIES	BODY	ENGINE	TRANS	TRIM	DESCRIPTION
		1	2, 6	L	51, 52, 54, 55, 56	EX8	DGZ		Drivers Side
		1	3, 7	L	02, 06	EX8	DGZ		Drivers Side
		1	3, 7	L	12, 15, 16	EX8	DGZ		Drivers Side
	5120 222AA	1	2, 6	L	01, 02, 06	EX8	DGZ		Passenger Side
		1	2, 6	L	11, 12, 14, 15, 16	EX8	DGZ		Passenger Side
		1	2, 6	L	51, 52, 54, 55, 56	EX8	DGZ		Passenger Side
		1	3, 7	L	02, 06	EX8	DGZ		Passenger Side
		1	3, 7	L	12, 15, 16	EX8	DGZ		Passenger Side
8									TERMINAL, Male
	5133 378AA	99	2, 6	L	01, 02, 06	EX8	DGZ		
		99	2, 6	L	11, 12, 14, 15, 16	EX8	DGZ		
		99	2, 6	L	51, 52, 54, 55, 56	EX8	DGZ		
		99	3, 7	L	02, 06	EX8	DGZ		
		99	3, 7	L	12, 15, 16	EX8	DGZ		
9									CONNECTOR
	5103 895AA	1	2, 6	L	01, 02, 06	EX8	DGZ		
		1	2, 6	L	11, 12, 14, 15, 16	EX8	DGZ		
		1	2, 6	L	51, 52, 54, 55, 56	EX8	DGZ		
		1	3, 7	L	02, 06	EX8	DGZ		
		1	3, 7	L	12, 15, 16	EX8	DGZ		
10									TERMINAL
	5103 881AA	99	2, 6	L	01, 02, 06	EX8	DGZ		

Refer to Model Legend Information Bookmark

AR = Use as required - = Non illustrated part # = New this model year

March 3, 2006

Wiring - Body & Accessories
Figure 008-1505

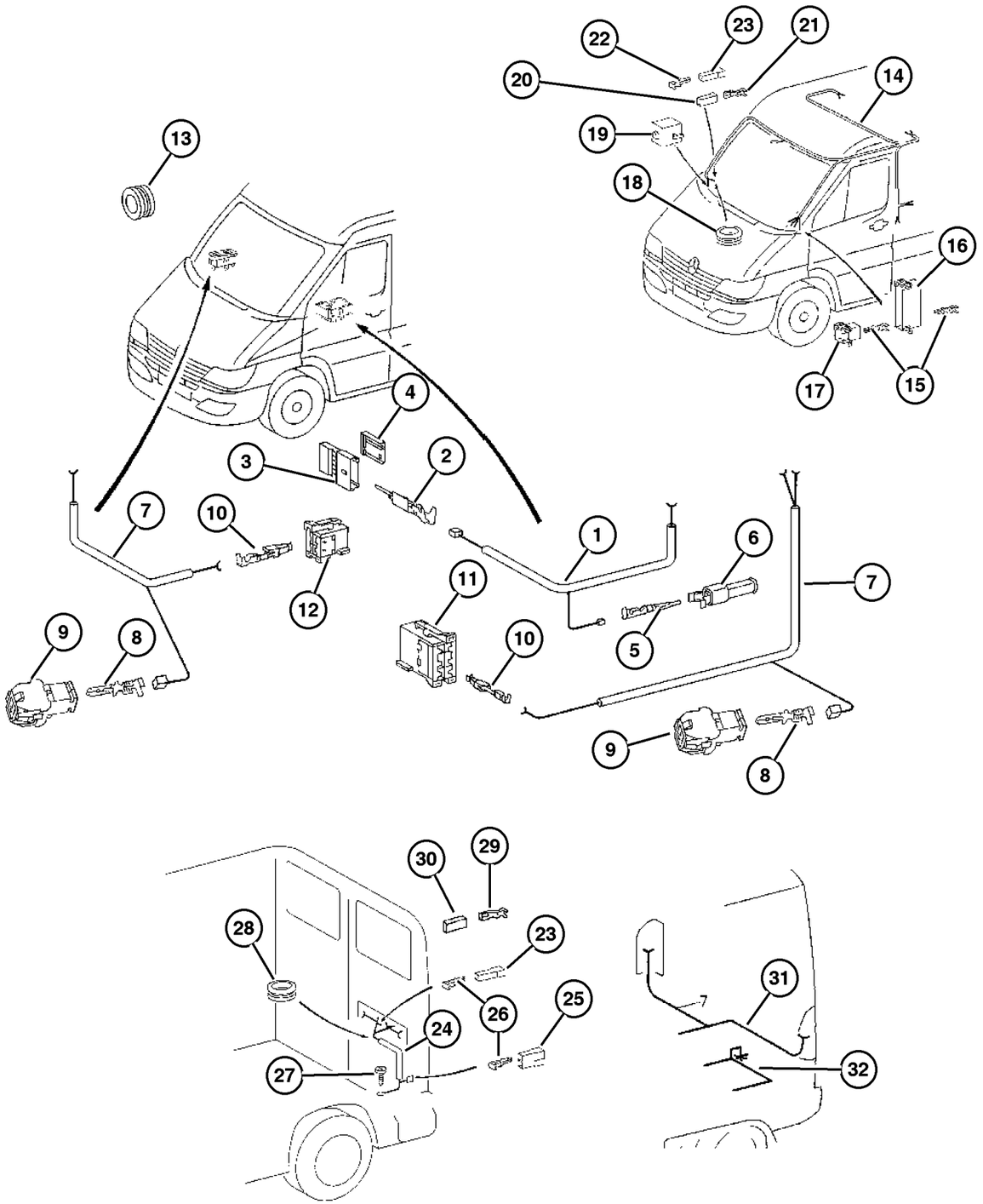

ITEM	PART NUMBER	QTY	LINE	SERIES	BODY	ENGINE	TRANS	TRIM	DESCRIPTION
		99	2, 6	L	11, 12,	EX8	DGZ		
					14, 15,				
					16				
		99	2, 6	L	51, 52,	EX8	DGZ		
					54, 55,				
					56				
		99	3, 7	L	02, 06	EX8	DGZ		
		99	3, 7	L	12, 15,	EX8	DGZ		
					16				
11									CONNECTOR
	5120 786AA	1	2, 6	L	01, 02,	EX8	DGZ		
					06				
		1	2, 6	L	11, 12,	EX8	DGZ		
					14, 15,				
					16				
		1	2, 6	L	51, 52,	EX8	DGZ		
					54, 55,				
					56				
		1	3, 7	L	02, 06	EX8	DGZ		
		1	3, 7	L	12, 15,	EX8	DGZ		
					16				
12									CONNECTOR
	5120 785AA	1	2, 6	L	01, 02,	EX8	DGZ		
					06				
		1	2, 6	L	11, 12,	EX8	DGZ		
					14, 15,				
					16				
		1	2, 6	L	51, 52,	EX8	DGZ		
					54, 55,				
					56				
		1	3, 7	L	02, 06	EX8	DGZ		
		1	3, 7	L	12, 15,	EX8	DGZ		
					16				
13									GROMMET
	5125 942AA	2	2, 6	L	01, 02,	EX8	DGZ		
					06				
		2	2, 6	L	11, 12,	EX8	DGZ		
					14, 15,				
					16				
		2	2, 6	L	51, 52,	EX8	DGZ		
					54, 55,				
					56				
		2	3, 7	L	02, 06	EX8	DGZ		
		2	3, 7	L	12, 15,	EX8	DGZ		
					16				
14									WIRING, Body

Refer to Model Legend Information Bookmark

AR = Use as required - = Non illustrated part # = New this model year

March 3, 2006

« RETURN TO GROUP INDEX

Wiring - Body & Accessories
Figure 008-1505

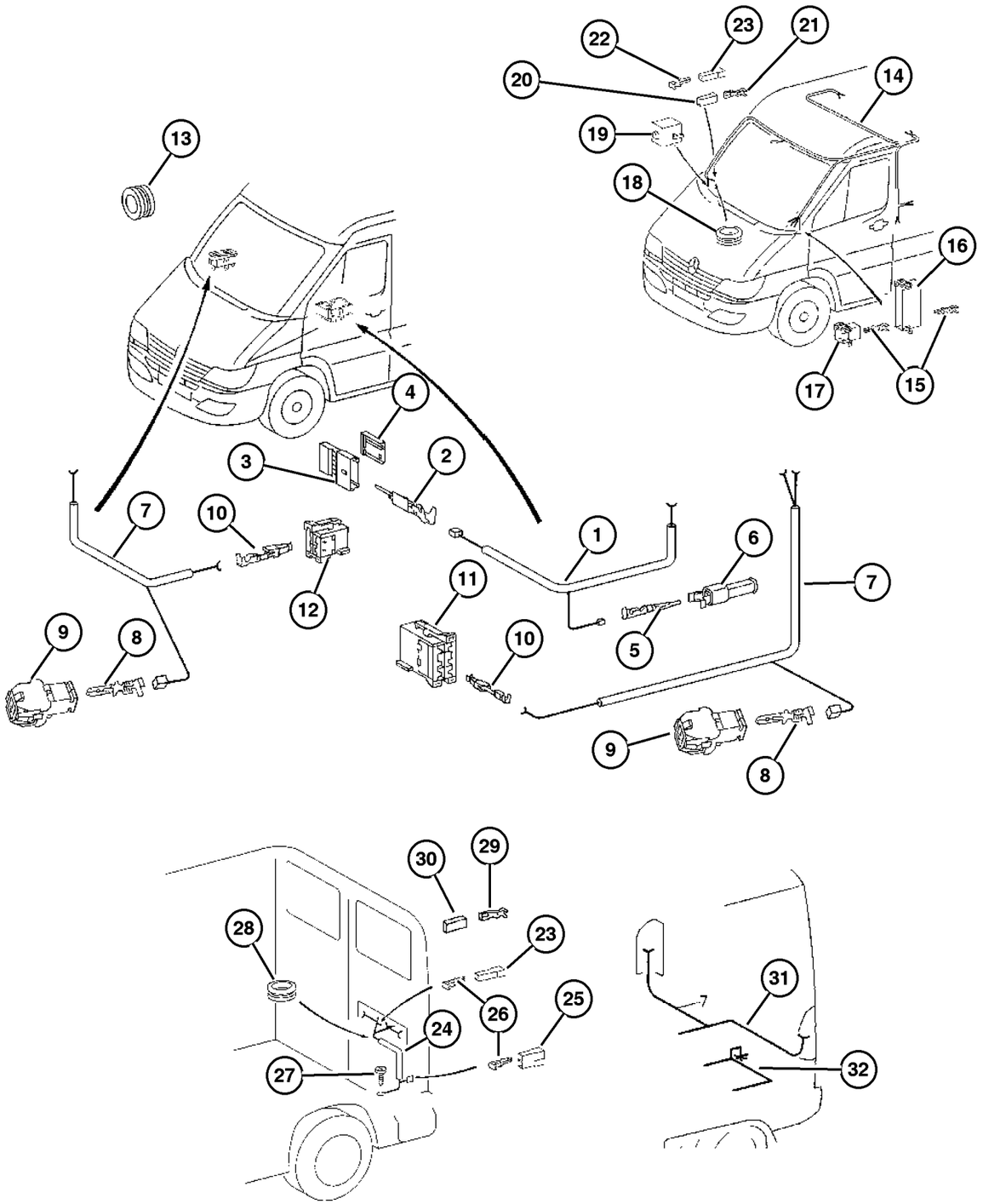

ITEM	PART NUMBER	QTY	LINE	SERIES	BODY	ENGINE	TRANS	TRIM	DESCRIPTION
	5114 931AA	1	2, 6	L	01, 02, 06	EX8	DGZ		
		1	2, 6	L	11, 12, 14, 15, 16	EX8	DGZ		
		1	2, 6	L	51, 52, 54, 55, 56	EX8	DGZ		
		1	3, 7	L	02, 06	EX8	DGZ		
		1	3, 7	L	12, 15, 16	EX8	DGZ		
15									TERMINAL, Male
	5133 377AA	1	2, 6	L	01, 02, 06	EX8	DGZ		
		1	2, 6	L	11, 12, 14, 15, 16	EX8	DGZ		
		1	2, 6	L	51, 52, 54, 55, 56	EX8	DGZ		
		1	3, 7	L	02, 06	EX8	DGZ		
		1	3, 7	L	12, 15, 16	EX8	DGZ		
16									CONNECTOR
	5120 794AA	1	2, 6	L	01, 02, 06	EX8	DGZ		
		1	2, 6	L	11, 12, 14, 15, 16	EX8	DGZ		
		1	2, 6	L	51, 52, 54, 55, 56	EX8	DGZ		
		1	3, 7	L	02, 06	EX8	DGZ		
		1	3, 7	L	12, 15, 16	EX8	DGZ		
17									CONNECTOR
	5120 791AA	1	2, 6	L	01, 02, 06	EX8	DGZ		
		1	2, 6	L	11, 12, 14, 15, 16	EX8	DGZ		
		1	2, 6	L	51, 52, 54, 55, 56	EX8	DGZ		
		1	3, 7	L	02, 06	EX8	DGZ		

Refer to Model Legend Information Bookmark

Wiring - Body & Accessories
Figure 008-1505

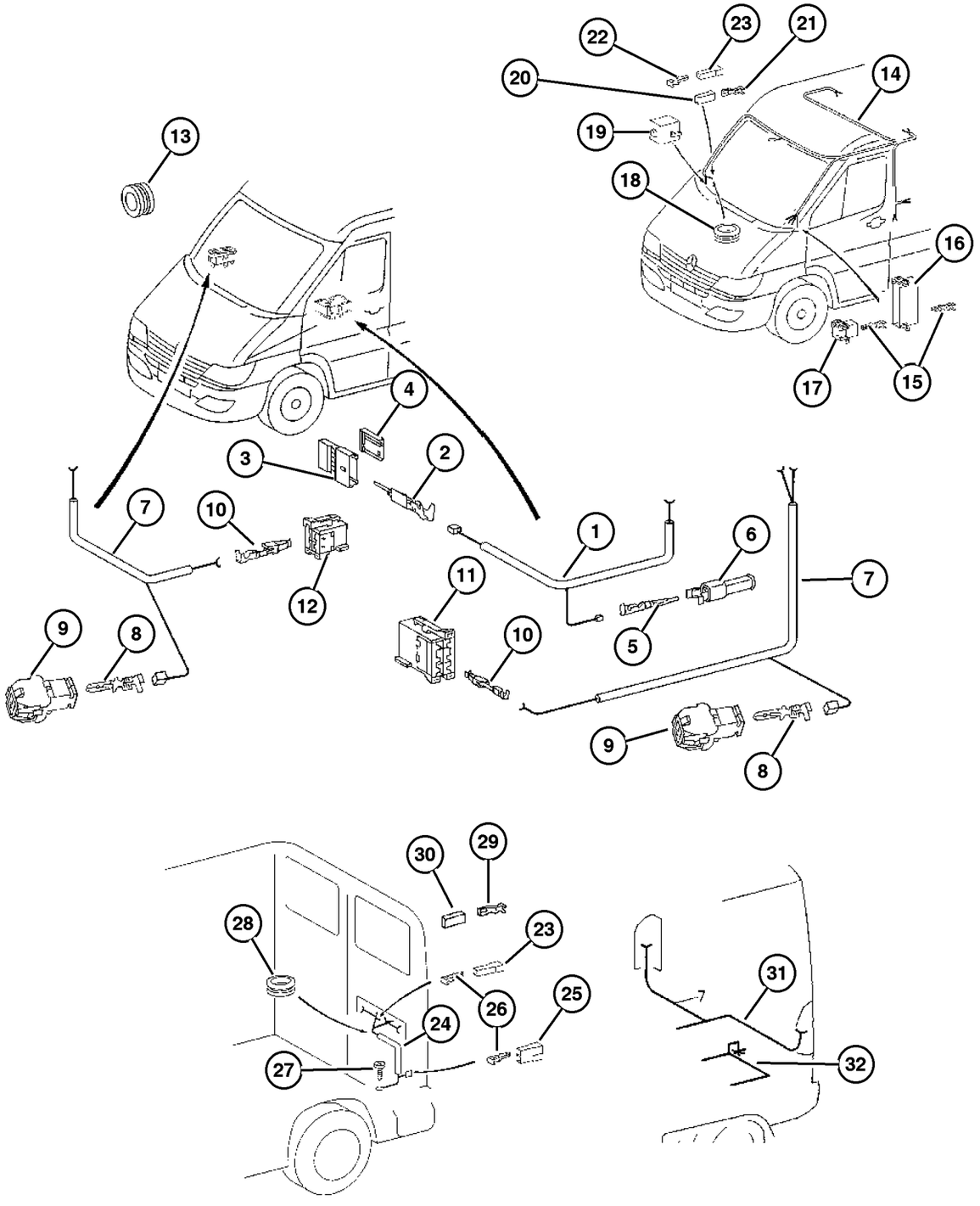

ITEM	PART NUMBER	QTY	LINE	SERIES	BODY	ENGINE	TRANS	TRIM	DESCRIPTION
		1	3, 7	L	12, 15, 16	EX8	DGZ		
18	5133 408AA	1	2, 6	L	01, 02, 06	EX8	DGZ		GROMMET, Chassis Wiring
		1	2, 6	L	11, 12, 14, 15, 16	EX8	DGZ		
		1	2, 6	L	51, 52, 54, 55, 56	EX8	DGZ		
		1	3, 7	L	02, 06	EX8	DGZ		
		1	3, 7	L	12, 15, 16	EX8	DGZ		
19	5133 401AA	1	2, 6	L	01, 02, 06	EX8	DGZ		INSULATOR, 2 Way
		1	2, 6	L	11, 12, 14, 15, 16	EX8	DGZ		
		1	2, 6	L	51, 52, 54, 55, 56	EX8	DGZ		
		1	3, 7	L	02, 06	EX8	DGZ		
		1	3, 7	L	12, 15, 16	EX8	DGZ		
20	5120 684AA	1	2, 6	L	11, 12, 14, 15, 16	EX8	DGZ		CONNECTOR
		1	2, 6	L	51, 52, 54, 55, 56	EX8	DGZ		
		1	2, 6	L	01, 02, 06	EX8	DGZ		
		1	3, 7	L	12, 15, 16	EX8	DGZ		
		1	3, 7	L	02, 06	EX8	DGZ		
21	5103 871AA	1	2, 6	L	01, 02, 06	EX8	DGZ		TERMINAL, Female
		1	2, 6	L	11, 12, 14, 15, 16	EX8	DGZ		

Refer to Model Legend Information Bookmark

AR = Use as required - = Non illustrated part # = New this model year

March 3, 2006

« RETURN TO GROUP INDEX

Wiring - Body & Accessories
Figure 008-1505

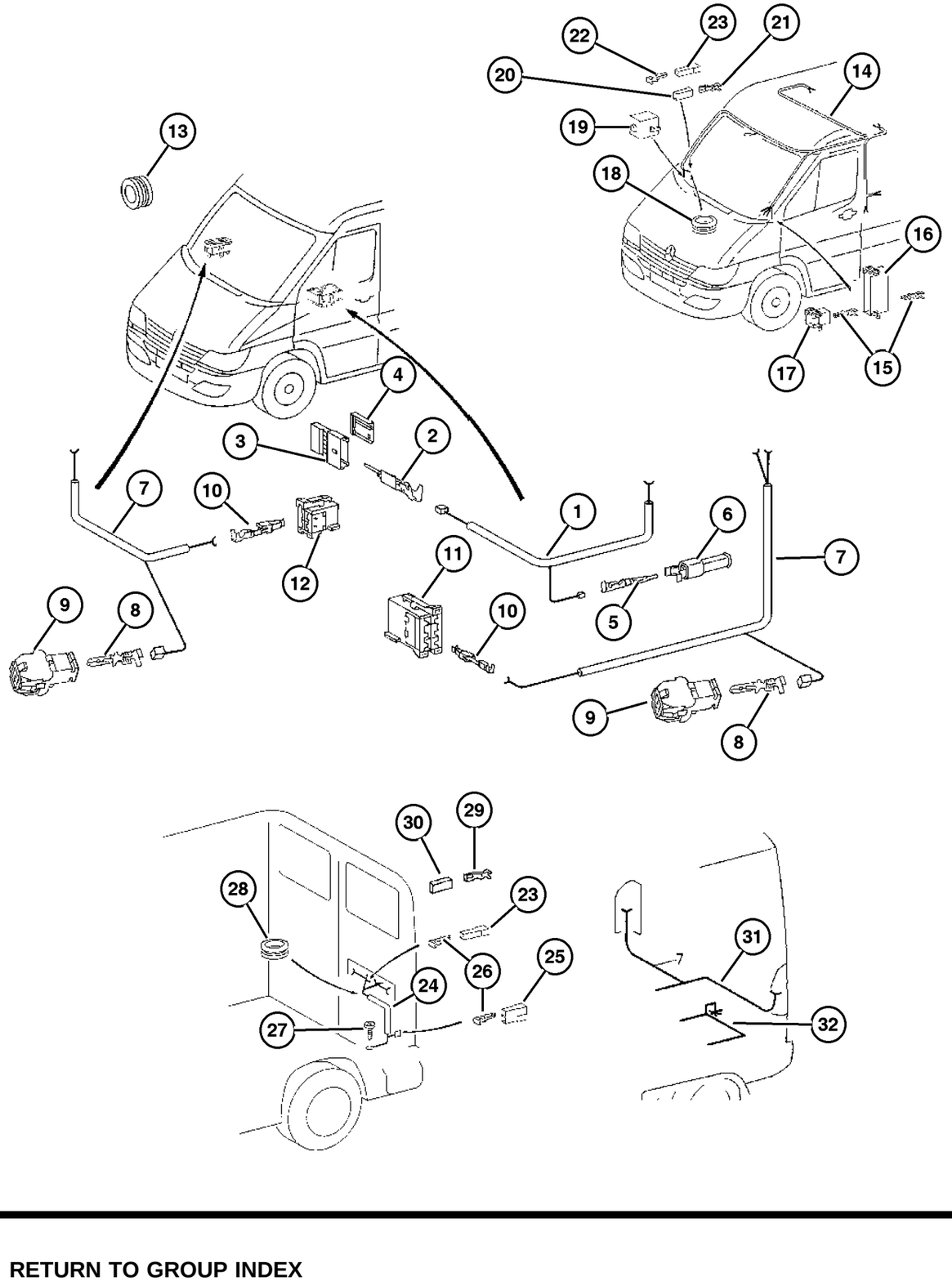

ITEM	PART NUMBER	QTY	LINE	SERIES	BODY	ENGINE	TRANS	TRIM	DESCRIPTION
		1	2, 6	L	51, 52, 54, 55, 56	EX8	DGZ		
		99	3, 7	L	12, 15, 16	EX8	DGZ		
		1	3, 7	L	02, 06	EX8	DGZ		
22									TERMINAL, Male
	5133 358AA	1	2, 6	L	01, 02, 06	EX8	DGZ		
		1	2, 6	L	11, 12, 14, 15, 16	EX8	DGZ		
		1	2, 6	L	51, 52, 54, 55, 56	EX8	DGZ		
		1	3, 7	L	02, 06	EX8	DGZ		
		1	3, 7	L	12, 15, 16	EX8	DGZ		
23									INSULATOR
	5120 685AA	2	2, 6	L	11, 12, 14, 15, 16	EX8	DGZ		
		2	2, 6	L	51, 52, 54, 55, 56	EX8	DGZ		
		2	3, 7	L	12, 15, 16	EX8	DGZ		
		1	3, 7	L	02, 06	EX8	DGZ		
		1	2, 6	L	01, 02, 06	EX8	DGZ		
24									WIRING, Rear Door
	5129 584AA	1	2, 6	L	11, 12, 14, 15, 16	EX8	DGZ		
		1	2, 6	L	51, 52, 54, 55, 56	EX8	DGZ		
		1	3, 7	L	12, 15, 16	EX8	DGZ		
25									CONNECTOR
	5103 751AA	1	2, 6	L	11, 12, 14, 15, 16	EX8	DGZ		

Refer to Model Legend Information Bookmark

AR = Use as required - = Non illustrated part # = New this model year

March 3, 2006

« RETURN TO GROUP INDEX

Wiring - Body & Accessories
Figure 008-1505

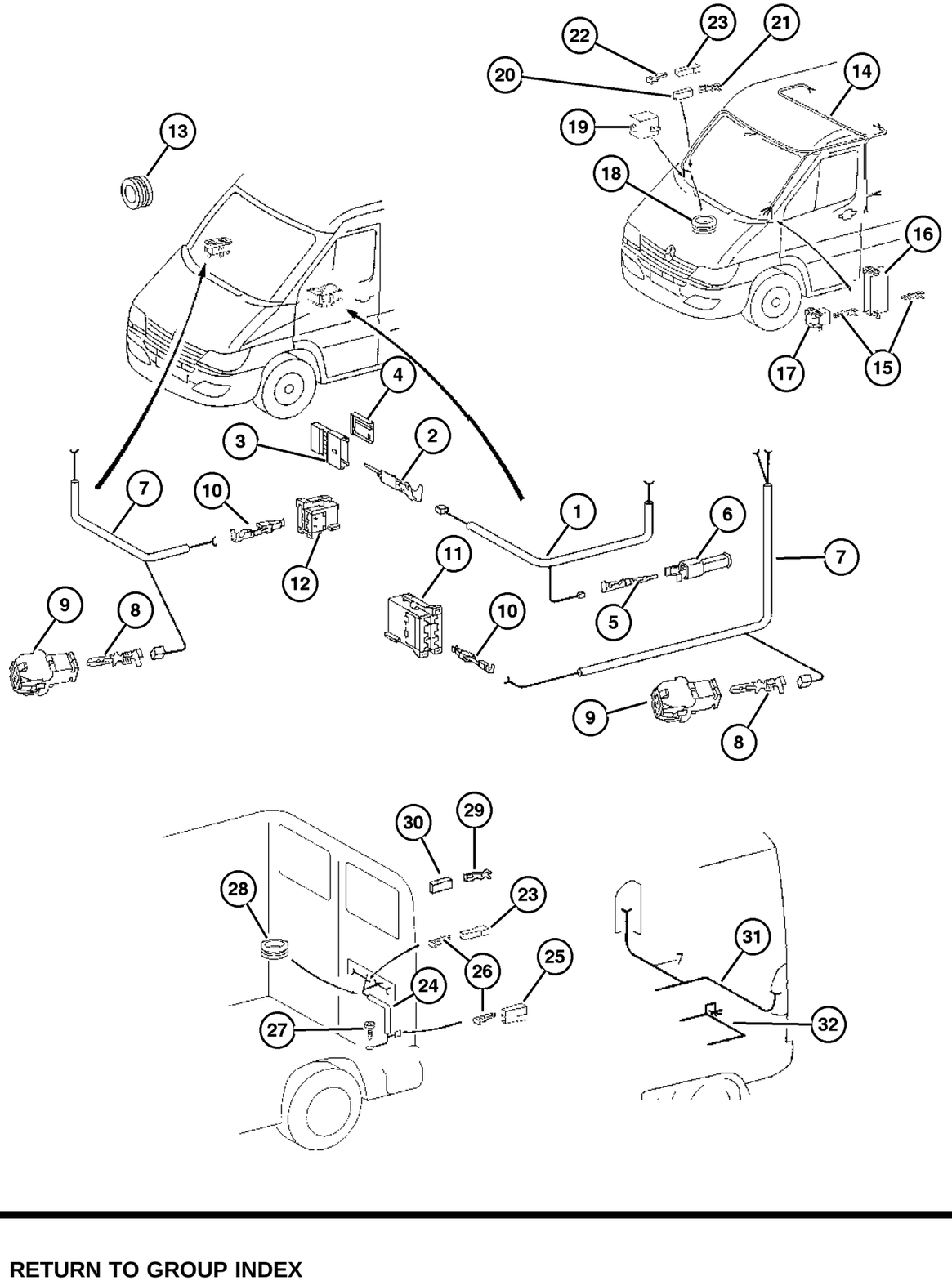

ITEM	PART NUMBER	QTY	LINE	SERIES	BODY	ENGINE	TRANS	TRIM	DESCRIPTION
		1	2, 6	L	51, 52,	EX8	DGZ		
					54, 55, 56				
		1	3, 7	L	12, 15, 16	EX8	DGZ		
26									TERMINAL, Male
	5103 798AA	99	2, 6	L	11, 12, 14, 15, 16	EX8	DGZ		
		99	2, 6	L	51, 52, 54, 55, 56	EX8	DGZ		
		1	2, 6	L	01, 02, 06	EX8	DGZ		
		99	3, 7	L	12, 15, 16	EX8	DGZ		
		1	3, 7	L	02, 06	EX8	DGZ		
27									SCREW, Tapping
	6104 574AA	2	2, 6	L	01, 02, 06	EX8	DGZ		
		2	2, 6	L	11, 12, 14, 15, 16	EX8	DGZ		
		2	2, 6	L	51, 52, 54, 55, 56	EX8	DGZ		
		2	3, 7	L	12, 15, 16	EX8	DGZ		
		2	3, 7	L	02, 06	EX8	DGZ		
28									GROMMET, Door Wiring
	5133 935AA	1	2, 6	L	01, 02, 06	EX8	DGZ		
		1	2, 6	L	11, 12, 14, 15, 16	EX8	DGZ		
		1	2, 6	L	51, 52, 54, 55, 56	EX8	DGZ		
		2	3, 7	L	12, 15, 16	EX8	DGZ		
		1	3, 7	L	02, 06	EX8	DGZ		
29									CONNECTOR
	5120 684AA	1	2, 6	L	11, 12, 14, 15, 16	EX8	DGZ		

Refer to Model Legend Information Bookmark

AR = Use as required - = Non illustrated part # = New this model year

March 3, 2006

Wiring - Body & Accessories
Figure 008-1505

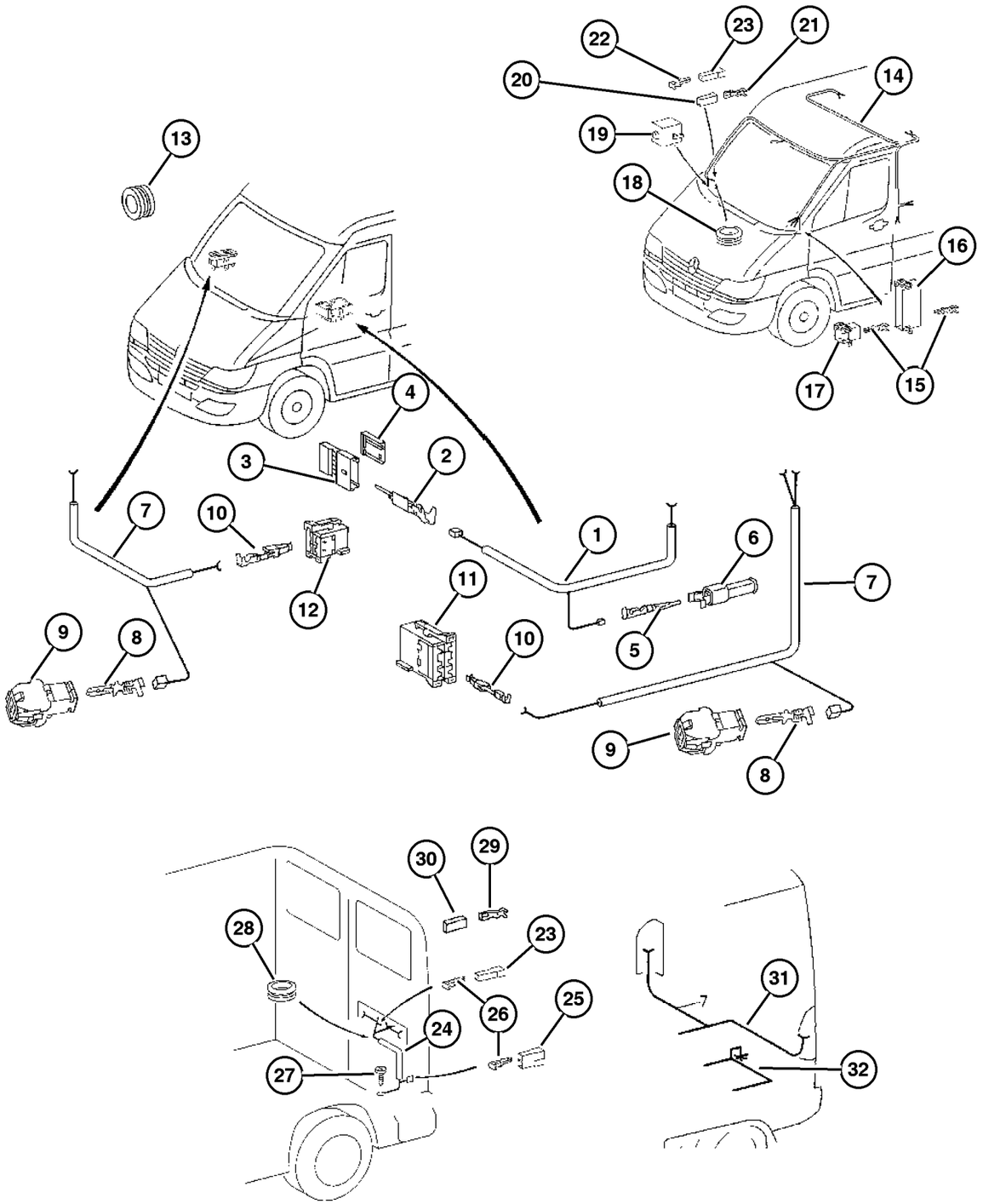

ITEM	PART NUMBER	QTY	LINE	SERIES	BODY	ENGINE	TRANS	TRIM	DESCRIPTION
		1	2, 6	L	51, 52, 54, 55, 56	EX8	DGZ		
		1	2, 6	L	01, 02, 06	EX8	DGZ		
		1	3, 7	L	12, 15, 16	EX8	DGZ		
		1	3, 7	L	02, 06	EX8	DGZ		
30									TERMINAL, Female
	5114 451AA	99	2, 6	L	01, 02, 06	EX8	DGZ		
		99	2, 6	L	11, 12, 14, 15, 16	EX8	DGZ		
		99	2, 6	L	51, 52, 54, 55, 56	EX8	DGZ		
		99	3, 7	L	02, 06	EX8	DGZ		
		99	3, 7	L	12, 15, 16	EX8	DGZ		
31									WIRING, Rear Body
	5133 399AA	1	2, 6	L	11, 12, 14, 15, 16	EX8	DGZ		
		1	2, 6	L	51, 52, 54, 55, 56	EX8	DGZ		
		1	3, 7	L	12, 15, 16	EX8	DGZ		
32									WIRING, Trailer Tow
	5133 400AA	1	2, 6	L	01, 02, 06	EX8	DGZ		
		1	2, 6	L	11, 12, 14, 15, 16	EX8	DGZ		
		1	2, 6	L	51, 52, 54, 55, 56	EX8	DGZ		
		1	3, 7	L	02, 06	EX8	DGZ		
		1	3, 7	L	12, 15, 16	EX8	DGZ		

Refer to Model Legend Information Bookmark

Connectors Engine Compartment
Figure 008-1605

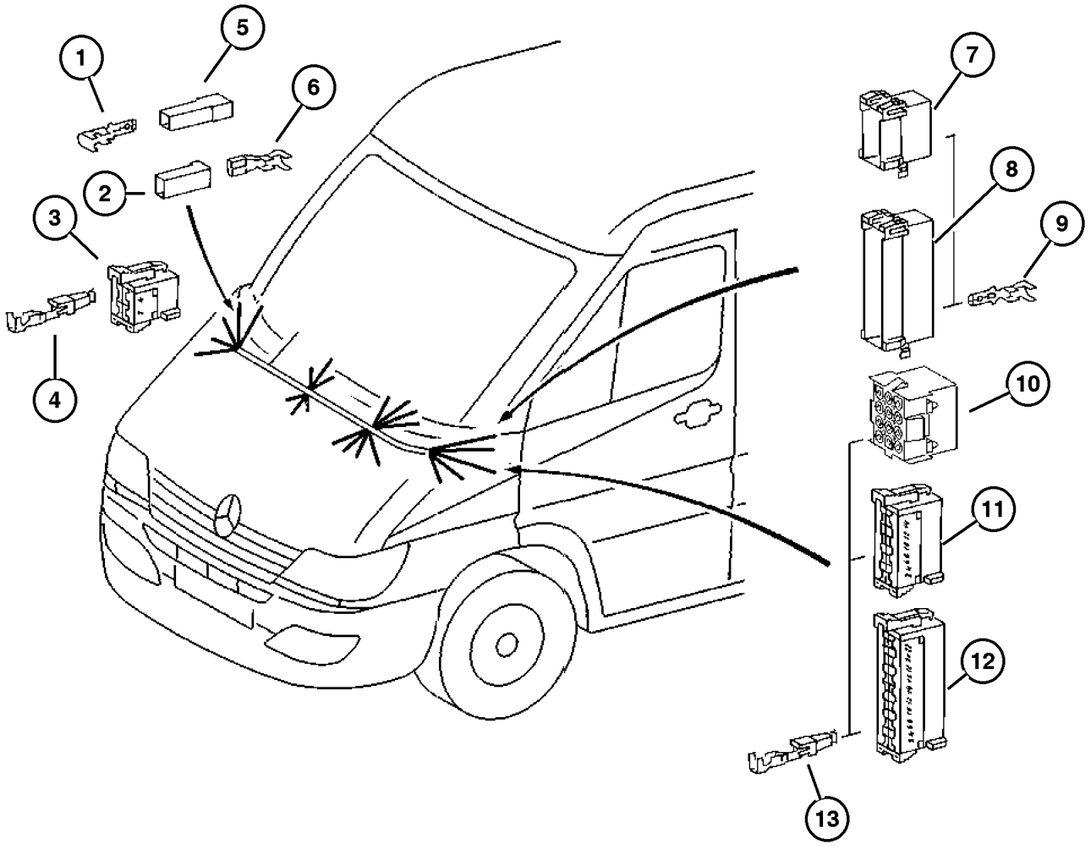

ITEM	PART NUMBER	QTY	LINE	SERIES	BODY	ENGINE	TRANS	TRIM	DESCRIPTION
1									TERMINAL, Male
	5133 391AA	99	2, 6	L	01, 02, 06	EX8	DGZ		
		99	2, 6	L	11, 12, 14, 15, 16	EX8	DGZ		
		99	2, 6	L	51, 52, 54, 55, 56	EX8	DGZ		
		99	3, 7	L	02, 06	EX8	DGZ		
		99	3, 7	L	12, 15, 16	EX8	DGZ		
2									CONNECTOR
	5120 684AA	1	2, 6	L	11, 12, 14, 15, 16	EX8	DGZ		
		1	2, 6	L	51, 52, 54, 55, 56	EX8	DGZ		
		1	2, 6	L	01, 02, 06	EX8	DGZ		
		1	3, 7	L	02, 06	EX8	DGZ		
		1	3, 7	L	12, 15, 16	EX8	DGZ		
3									TERMINAL
	5103 882AA	1	2, 6	L	01, 02, 06	EX8	DGZ		
		1	2, 6	L	11, 12, 14, 15, 16	EX8	DGZ		
		1	2, 6	L	51, 52, 54, 55, 56	EX8	DGZ		
		1	3, 7	L	02, 06	EX8	DGZ		
		1	3, 7	L	12, 15, 16	EX8	DGZ		
4									CONNECTOR
	5120 785AA	1	2, 6	L	01, 02, 06	EX8	DGZ		
		1	2, 6	L	11, 12, 14, 15, 16	EX8	DGZ		
		1	2, 6	L	51, 52, 54, 55, 56	EX8	DGZ		

Refer to Model Legend Information Bookmark

AR = Use as required - = Non illustrated part # = New this model year

March 3, 2006

« RETURN TO GROUP INDEX

»

Connectors Engine Compartment
Figure 008-1605

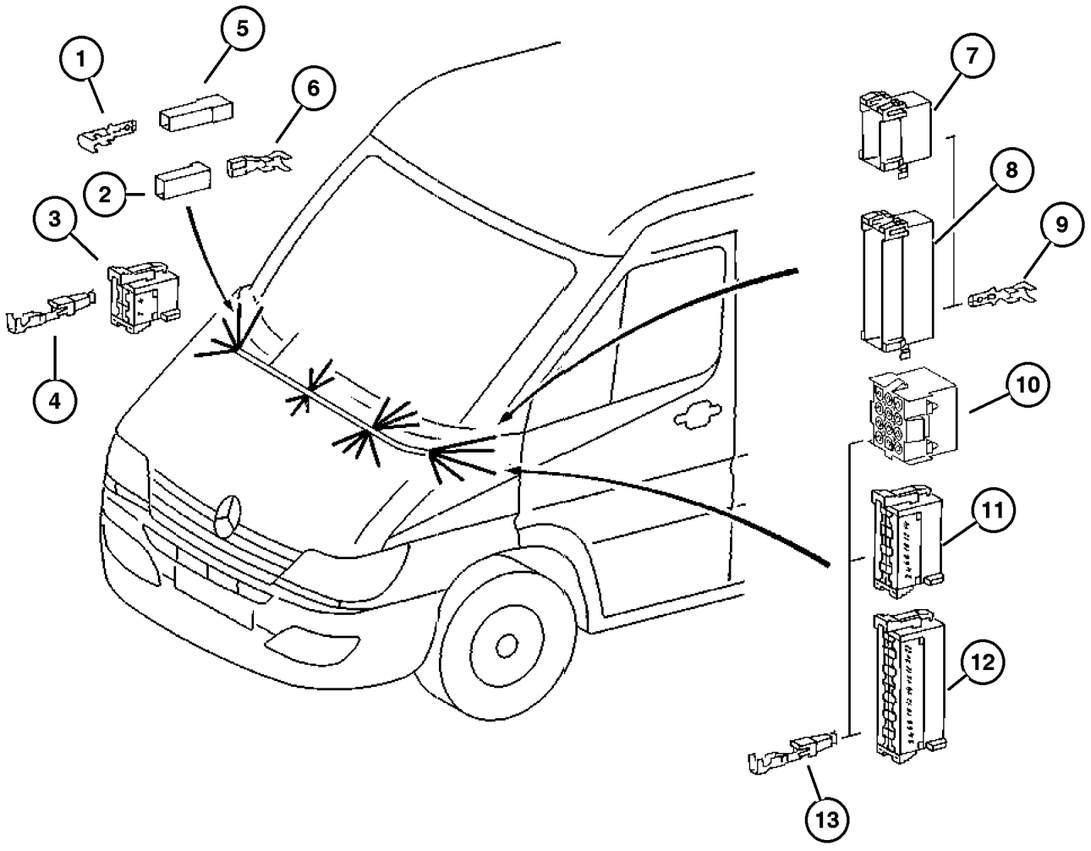

ITEM	PART NUMBER	QTY	LINE	SERIES	BODY	ENGINE	TRANS	TRIM	DESCRIPTION
		1	3, 7	L	02, 06	EX8	DGZ		
		1	3, 7	L	12, 15, 16	EX8	DGZ		
5									INSULATOR
	5120 685AA	2	2, 6	L	51, 52, 54, 55, 56	EX8	DGZ		
		2	2, 6	L	11, 12, 14, 15, 16	EX8	DGZ		
		1	2, 6	L	01, 02, 06	EX8	DGZ		
		1	3, 7	L	02, 06	EX8	DGZ		
		1	3, 7	L	12, 15, 16	EX8	DGZ		
6									TERMINAL, Female
	5103 871AA	1	2, 6	L	01, 02, 06	EX8	DGZ		
		1	2, 6	L	11, 12, 14, 15, 16	EX8	DGZ		
		1	2, 6	L	51, 52, 54, 55, 56	EX8	DGZ		
		99	3, 7	L	12, 15, 16	EX8	DGZ		
		1	3, 7	L	02, 06	EX8	DGZ		
7									INSULATOR
	5133 393AA	1	2, 6	L	01, 02, 06	EX8	DGZ		
		1	2, 6	L	11, 12, 14, 15, 16	EX8	DGZ		
		1	2, 6	L	51, 52, 54, 55, 56	EX8	DGZ		
		1	3, 7	L	02, 06	EX8	DGZ		
		1	3, 7	L	12, 15, 16	EX8	DGZ		
8									CONNECTOR
	5120 793AA	1	2, 6	L	01, 02, 06	EX8	DGZ		
		1	2, 6	L	11, 12, 14, 15, 16	EX8	DGZ		

Refer to Model Legend Information Bookmark

AR = Use as required - = Non illustrated part # = New this model year

March 3, 2006

« RETURN TO GROUP INDEX

Connectors Engine Compartment
Figure 008-1605

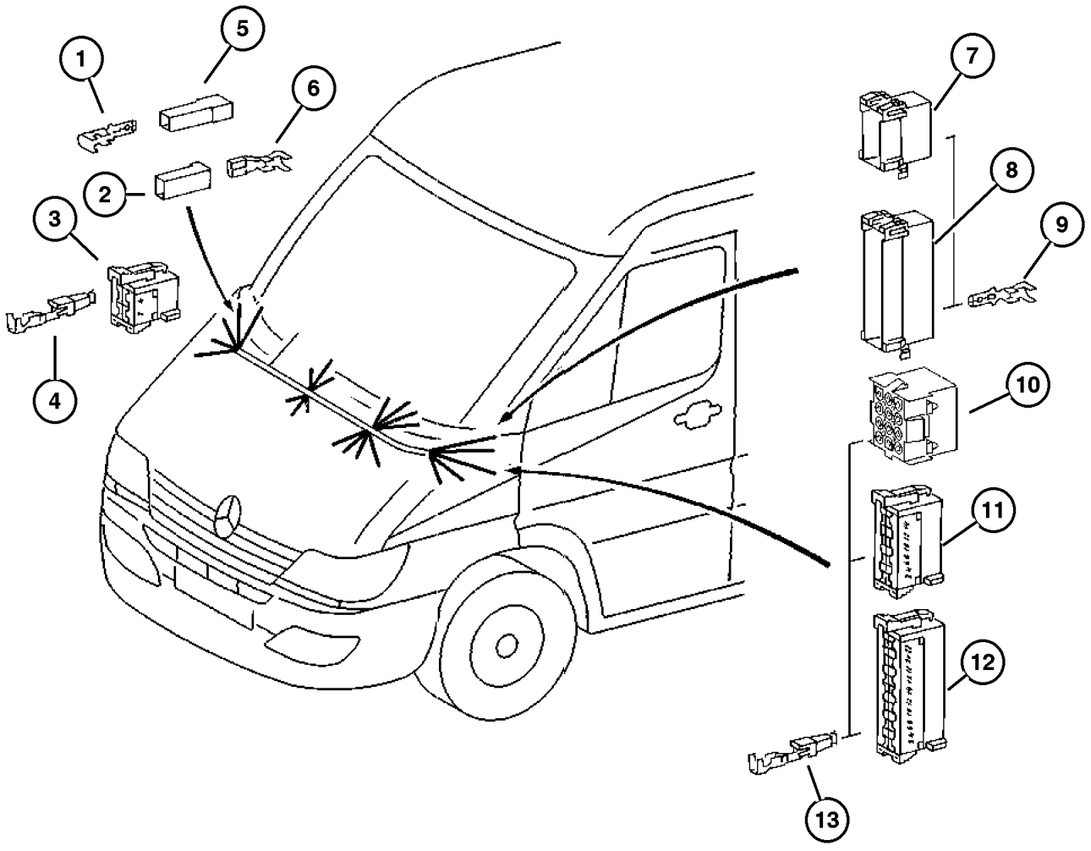

ITEM	PART NUMBER	QTY	LINE	SERIES	BODY	ENGINE	TRANS	TRIM	DESCRIPTION
		1	2, 6	L	51, 52, 54, 55, 56	EX8	DGZ		
		1	3, 7	L	02, 06	EX8	DGZ		
		1	3, 7	L	12, 15, 16	EX8	DGZ		
9	5133 371AA	1	2, 6	L	01, 02, 06	EX8	DGZ		TERMINAL, Male
		1	2, 6	L	11, 12, 14, 15, 16	EX8	DGZ		
		1	2, 6	L	51, 52, 54, 55, 56	EX8	DGZ		
		1	3, 7	L	02, 06	EX8	DGZ		
		1	3, 7	L	12, 15, 16	EX8	DGZ		
10	5120 675AA	1	2, 6	L	01, 02, 06	EX8	DGZ		CONNECTOR
		1	2, 6	L	11, 12, 14, 15, 16	EX8	DGZ		
		1	2, 6	L	51, 52, 54, 55, 56	EX8	DGZ		
		1	3, 7	L	02, 06	EX8	DGZ		
		1	3, 7	L	12, 15, 16	EX8	DGZ		
11	5120 787AA	1	2, 6	L	01, 02, 06	EX8	DGZ		CONNECTOR
		1	2, 6	L	11, 12, 14, 15, 16	EX8	DGZ		
		1	2, 6	L	51, 52, 54, 55, 56	EX8	DGZ		
		1	3, 7	L	02, 06	EX8	DGZ		
		1	3, 7	L	12, 15, 16	EX8	DGZ		
12	5120 789AA	1	2, 6	L	01, 02, 06	EX8	DGZ		CONNECTOR

Refer to Model Legend Information Bookmark

AR = Use as required - = Non illustrated part # = New this model year

March 3, 2006

Connectors Engine Compartment
Figure 008-1605

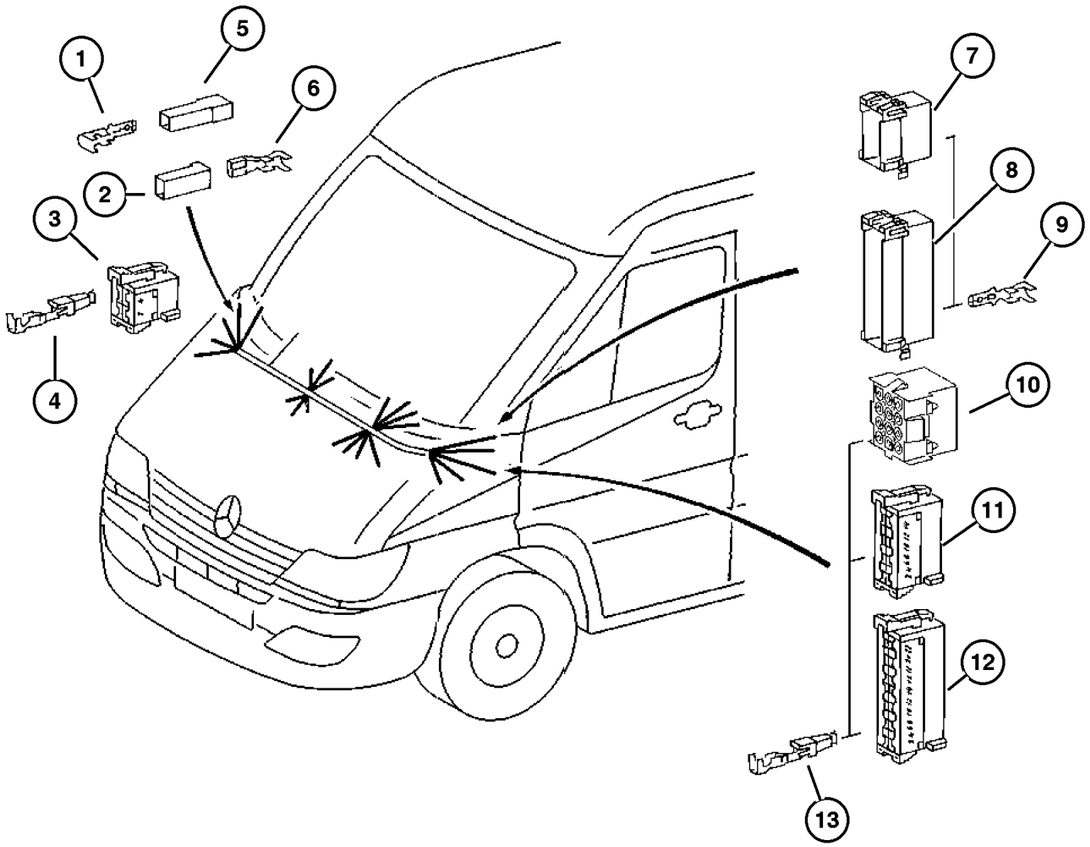

ITEM	PART NUMBER	QTY	LINE	SERIES	BODY	ENGINE	TRANS	TRIM	DESCRIPTION
		1	2, 6	L	11, 12, 14, 15, 16	EX8	DGZ		
		1	2, 6	L	51, 52, 54, 55, 56	EX8	DGZ		
		1	3, 7	L	02, 06	EX8	DGZ		
		1	3, 7	L	12, 15, 16	EX8	DGZ		
13									TERMINAL
	5103 881AA	99	2, 6	L	01, 02, 06	EX8	DGZ		
		99	2, 6	L	11, 12, 14, 15, 16	EX8	DGZ		
		99	2, 6	L	51, 52, 54, 55, 56	EX8	DGZ		
		99	3, 7	L	12, 15, 16	EX8	DGZ		
		99	3, 7	L	02, 06	EX8	DGZ		

Refer to Model Legend Information Bookmark

AR = Use as required - = Non illustrated part # = New this model year

March 3, 2006

« RETURN TO GROUP INDEX

Connectors Body
Figure 008-1610

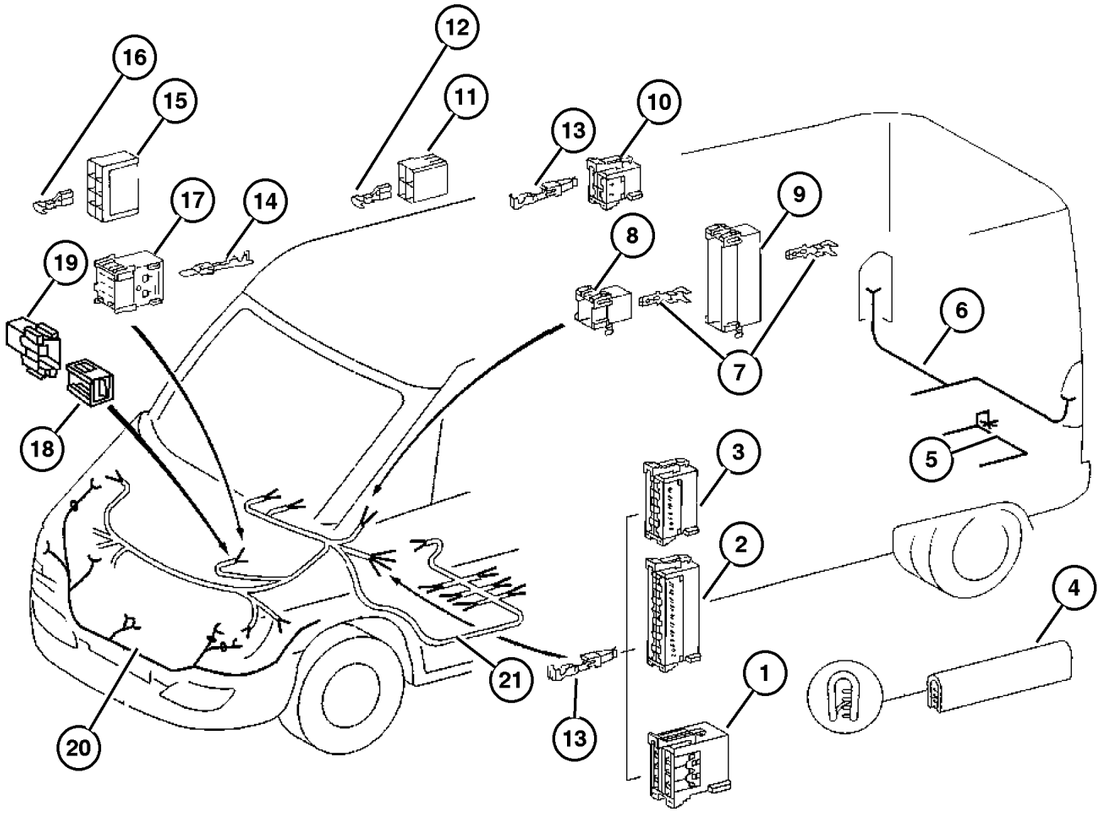

ITEM	PART NUMBER	QTY	LINE	SERIES	BODY	ENGINE	TRANS	TRIM	DESCRIPTION
1									CONNECTOR
	5120 796AA	1	2, 6	L	01, 02, 06	EX8	DGZ		
		1	2, 6	L	11, 12, 14, 15, 16	EX8	DGZ		
		1	2, 6	L	51, 52, 54, 55, 56	EX8	DGZ		
		1	3, 7	L	02, 06	EX8	DGZ		
		1	3, 7	L	12, 15, 16	EX8	DGZ		
2									CONNECTOR
	5120 789AA	1	2, 6	L	01, 02, 06	EX8	DGZ		
		1	2, 6	L	11, 12, 14, 15, 16	EX8	DGZ		
		1	2, 6	L	51, 52, 54, 55, 56	EX8	DGZ		
		1	3, 7	L	02, 06	EX8	DGZ		
		1	3, 7	L	12, 15, 16	EX8	DGZ		
3									CONNECTOR
	5120 788AA	1	2, 6	L	01, 02, 06	EX8	DGZ		
		1	2, 6	L	11, 12, 14, 15, 16	EX8	DGZ		
		1	2, 6	L	51, 52, 54, 55, 56	EX8	DGZ		
		1	3, 7	L	02, 06	EX8	DGZ		
		1	3, 7	L	12, 15, 16	EX8	DGZ		
4									PROTECTOR
	5132 391AA	1	2, 6	L	12, 15	EX8	DGZ		
		2	2, 6	L	11, 14, 16	EX8	DGZ		
		1	2, 6	L	52, 55	EX8	DGZ		
		2	2, 6	L	51, 54, 56	EX8	DGZ		
		5	3, 7	L	12, 15	EX8	DGZ		
		7	3, 7	L	16	EX8	DGZ		
5									WIRING, Trailer Tow

Refer to Model Legend Information Bookmark

Connectors Body
Figure 008-1610

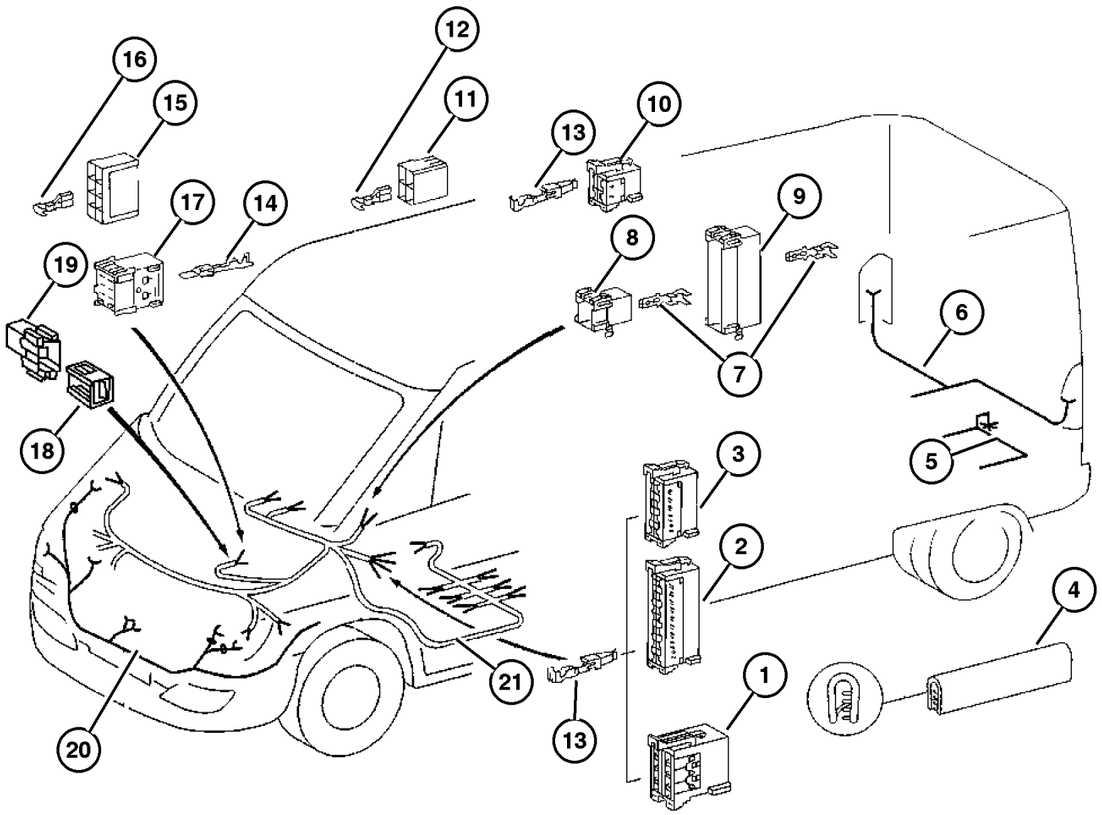

ITEM	PART NUMBER	QTY	LINE	SERIES	BODY	ENGINE	TRANS	TRIM	DESCRIPTION
	5133 400AA	1	2, 6	L	01, 02, 06	EX8	DGZ		
		1	2, 6	L	11, 12, 14, 15, 16	EX8	DGZ		
		1	2, 6	L	51, 52, 54, 55, 56	EX8	DGZ		
		1	3, 7	L	02, 06	EX8	DGZ		
		1	3, 7	L	12, 15, 16	EX8	DGZ		
6									WIRING, Rear Body
	5133 399AA	1	2, 6	L	11, 12, 14, 15, 16	EX8	DGZ		
		1	2, 6	L	51, 52, 54, 55, 56	EX8	DGZ		
		1	3, 7	L	12, 15, 16	EX8	DGZ		
7									TERMINAL, Male
	5133 377AA	1	2, 6	L	01, 02, 06	EX8	DGZ		
		1	2, 6	L	11, 12, 14, 15, 16	EX8	DGZ		
		1	2, 6	L	51, 52, 54, 55, 56	EX8	DGZ		
		1	3, 7	L	02, 06	EX8	DGZ		
		1	3, 7	L	12, 15, 16	EX8	DGZ		
8									CONNECTOR
	5120 791AA	1	2, 6	L	01, 02, 06	EX8	DGZ		
		1	2, 6	L	11, 12, 14, 15, 16	EX8	DGZ		
		1	2, 6	L	51, 52, 54, 55, 56	EX8	DGZ		
		1	3, 7	L	02, 06	EX8	DGZ		
		1	3, 7	L	12, 15, 16	EX8	DGZ		
9									CONNECTOR

Refer to Model Legend Information Bookmark

Connectors Body
Figure 008-1610

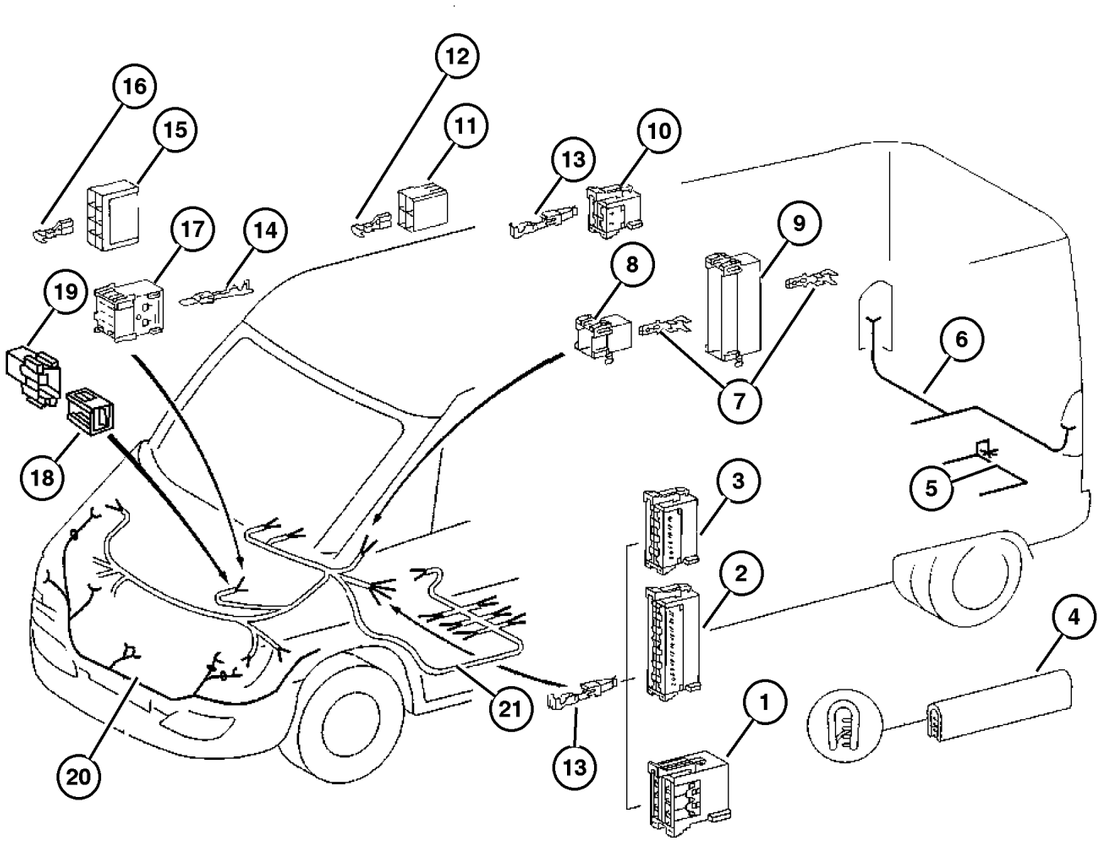

ITEM	PART NUMBER	QTY	LINE	SERIES	BODY	ENGINE	TRANS	TRIM	DESCRIPTION
	5120 794AA	1	2, 6	L	01, 02, 06	EX8	DGZ		
		1	2, 6	L	11, 12, 14, 15, 16	EX8	DGZ		
		1	2, 6	L	51, 52, 54, 55, 56	EX8	DGZ		
		1	3, 7	L	02, 06	EX8	DGZ		
		1	3, 7	L	12, 15, 16	EX8	DGZ		
10									CONNECTOR
	5120 785AA	1	2, 6	L	01, 02, 06	EX8	DGZ		
		1	2, 6	L	11, 12, 14, 15, 16	EX8	DGZ		
		1	2, 6	L	51, 52, 54, 55, 56	EX8	DGZ		
		1	3, 7	L	02, 06	EX8	DGZ		
		1	3, 7	L	12, 15, 16	EX8	DGZ		
11									CONNECTOR
	5103 753AA	99	2, 6	L	01, 02, 06	EX8	DGZ		
		99	2, 6	L	11, 12, 14, 15, 16	EX8	DGZ		
		99	2, 6	L	51, 52, 54, 55, 56	EX8	DGZ		
		99	3, 7	L	02, 06	EX8	DGZ		
		99	3, 7	L	12, 15, 16	EX8	DGZ		
12									TERMINAL, Female
	5133 360AA	99	2, 6	L	01, 02, 06	EX8	DGZ		
		99	2, 6	L	11, 12, 14, 15, 16	EX8	DGZ		
		99	2, 6	L	51, 52, 54, 55, 56	EX8	DGZ		
		99	3, 7	L	02, 06	EX8	DGZ		

Refer to Model Legend Information Bookmark

Connectors Body
Figure 008-1610

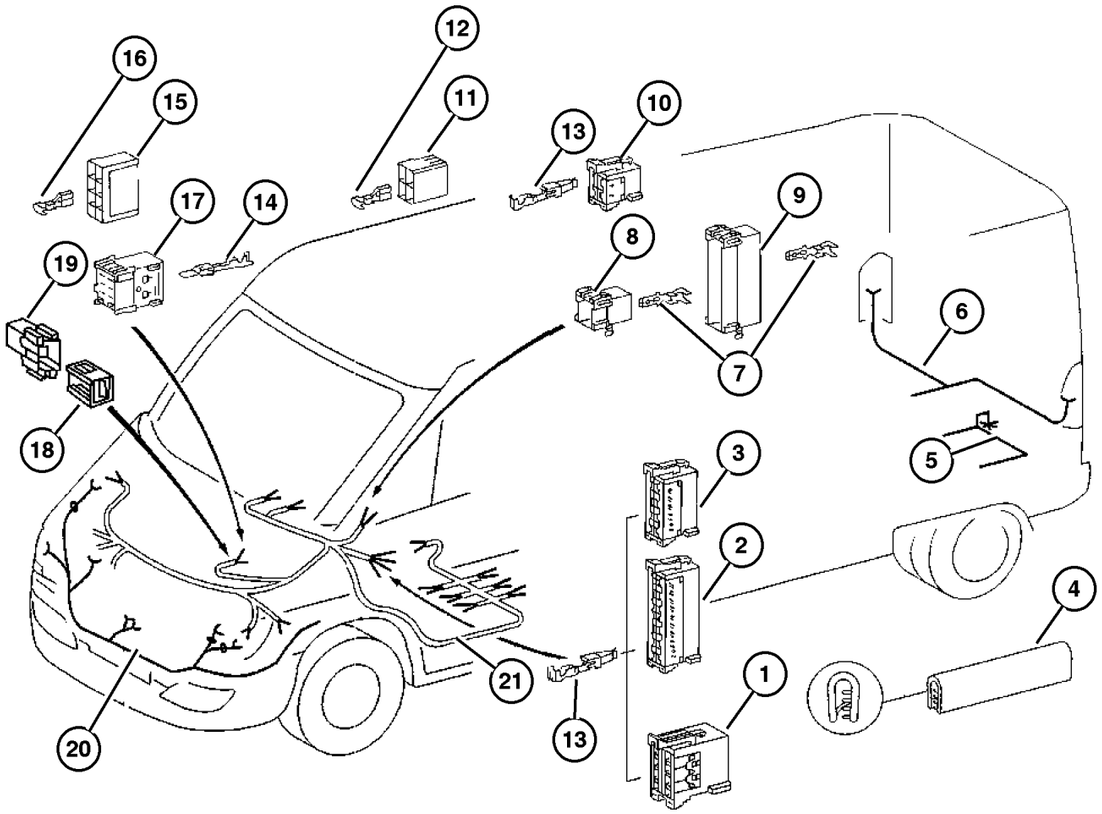

ITEM	PART NUMBER	QTY	LINE	SERIES	BODY	ENGINE	TRANS	TRIM	DESCRIPTION
		99	3, 7	L	12, 15, 16	EX8	DGZ		
13	5103 881AA	99	2, 6	L	01, 02, 06	EX8	DGZ		TERMINAL
		99	2, 6	L	11, 12, 14, 15, 16	EX8	DGZ		
		99	2, 6	L	51, 52, 54, 55, 56	EX8	DGZ		
		99	3, 7	L	02, 06	EX8	DGZ		
		99	3, 7	L	12, 15, 16	EX8	DGZ		
14	5103 909AA	1	2, 6	L	01, 02, 06	EX8	DGZ		TERMINAL, Male
		1	2, 6	L	11, 12, 14, 15, 16	EX8	DGZ		
		1	2, 6	L	51, 52, 54, 55, 56	EX8	DGZ		
		1	3, 7	L	02, 06	EX8	DGZ		
		1	3, 7	L	12, 15, 16	EX8	DGZ		
15	5103 752AA	1	2, 6	L	01, 02, 06	EX8	DGZ		CONNECTOR
		1	2, 6	L	11, 12, 14, 15, 16	EX8	DGZ		
		1	2, 6	L	51, 52, 54, 55, 56	EX8	DGZ		
		1	3, 7	L	02, 06	EX8	DGZ		
		1	3, 7	L	12, 15, 16	EX8	DGZ		
16	5133 359AA	1	2, 6	L	01, 02, 06	EX8	DGZ		TERMINAL, Female
		1	2, 6	L	11, 12, 14, 15, 16	EX8	DGZ		

Refer to Model Legend Information Bookmark

Connectors Body
Figure 008-1610

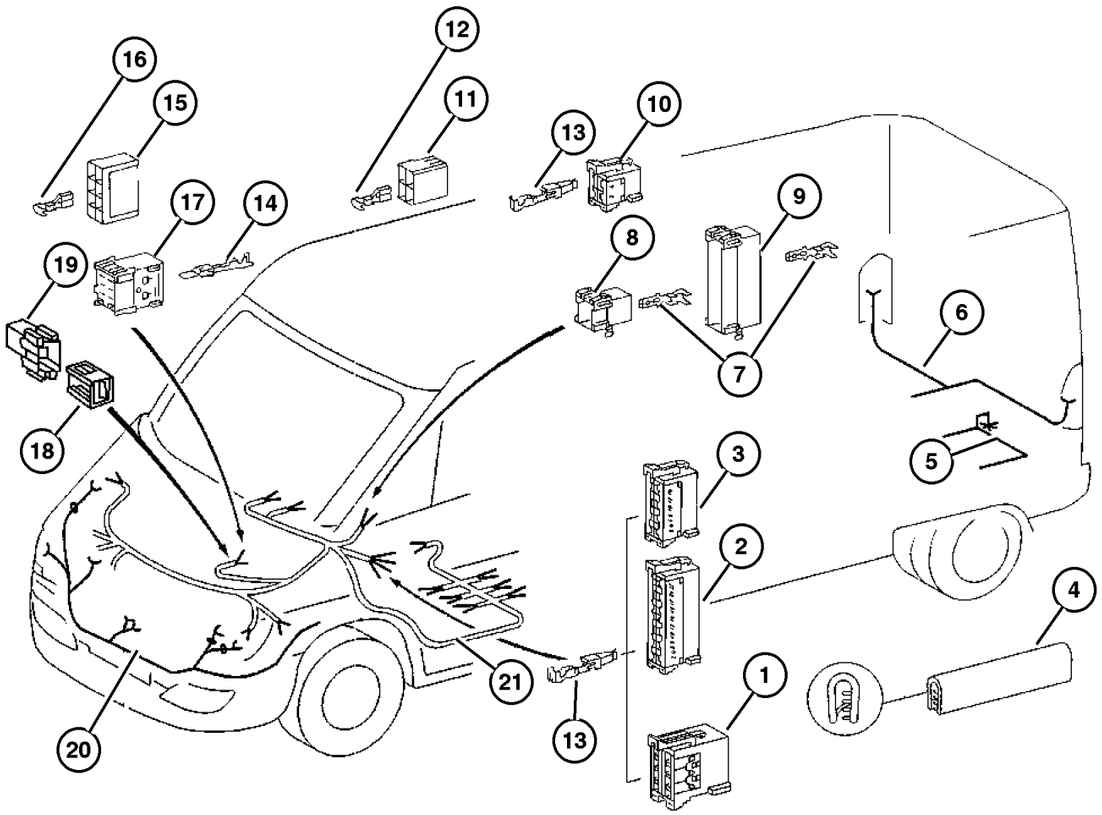

ITEM	PART NUMBER	QTY	LINE	SERIES	BODY	ENGINE	TRANS	TRIM	DESCRIPTION
		1	2, 6	L	51, 52, 54, 55, 56	EX8	DGZ		
		1	3, 7	L	02, 06	EX8	DGZ		
		1	3, 7	L	12, 15, 16	EX8	DGZ		
17	5133 327AA	1	2, 6	L	01, 02, 06	EX8	DGZ		INSULATOR, 6 Way Male
		1	2, 6	L	11, 12, 14, 15, 16	EX8	DGZ		
		1	2, 6	L	51, 52, 54, 55, 56	EX8	DGZ		
		1	3, 7	L	02, 06	EX8	DGZ		
		1	3, 7	L	12, 15, 16	EX8	DGZ		
18	5133 396AA	1	2, 6	L	01, 02, 06	EX8	DGZ		CONNECTOR, Wiring
		1	2, 6	L	11, 12, 14, 15, 16	EX8	DGZ		
		1	2, 6	L	51, 52, 54, 55, 56	EX8	DGZ		
		1	3, 7	L	02, 06	EX8	DGZ		
		1	3, 7	L	12, 15, 16	EX8	DGZ		
19	5133 397AA	1	2, 6	L	01, 02, 06	EX8	DGZ		INSULATOR, 4 Way Male
		1	2, 6	L	11, 12, 14, 15, 16	EX8	DGZ		
		1	2, 6	L	51, 52, 54, 55, 56	EX8	DGZ		
		1	3, 7	L	02, 06	EX8	DGZ		
		1	3, 7	L	12, 15, 16	EX8	DGZ		
20	5133 398AA	1	2, 6	L	01, 02, 06	EX8	DGZ		WIRING, Headlamp

Refer to Model Legend Information Bookmark

Connectors Body
Figure 008-1610

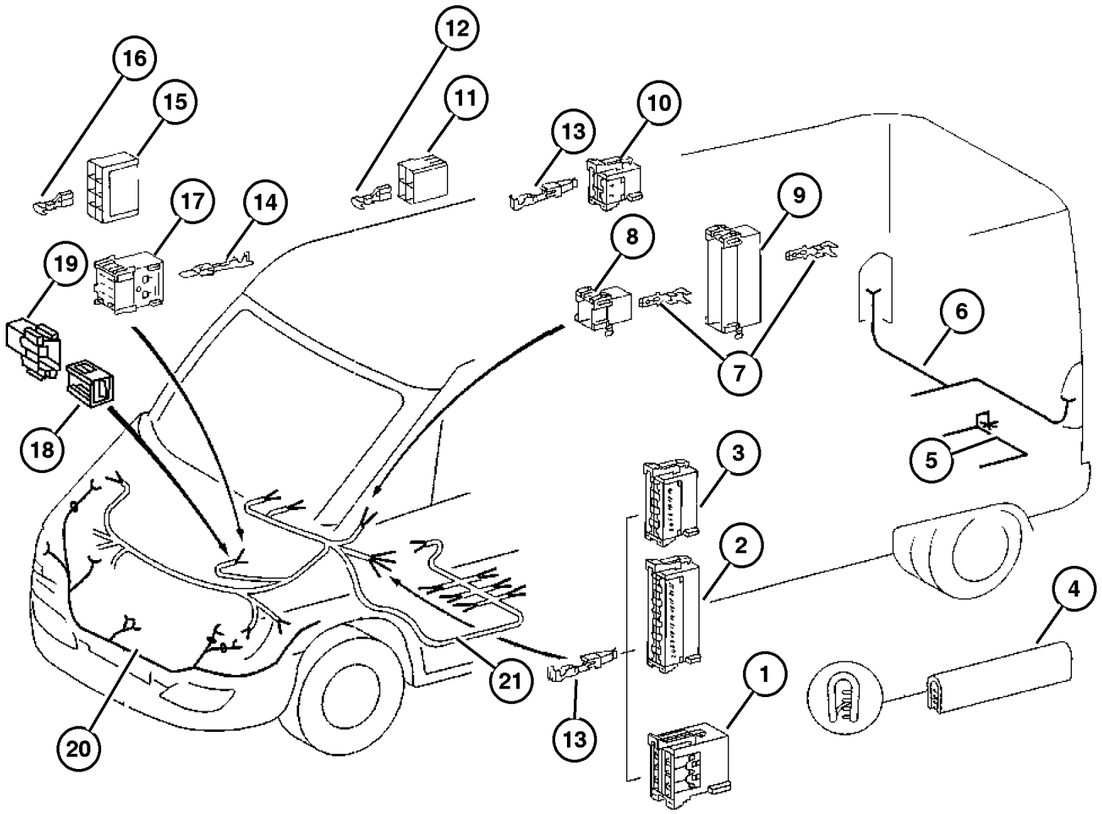

ITEM	PART NUMBER	QTY	LINE	SERIES	BODY	ENGINE	TRANS	TRIM	DESCRIPTION
		1	2, 6	L	11, 12, 14, 15, 16	EX8	DGZ		
		1	2, 6	L	51, 52, 54, 55, 56	EX8	DGZ		
		1	3, 7	L	02, 06	EX8	DGZ		
		1	3, 7	L	12, 15, 16	EX8	DGZ		
21									WIRING, Headlamp to Dash
	5114 935AA	1	2, 6	L	01, 02, 06	EX8	DGZ		
		1	2, 6	L	11, 12, 14, 15, 16	EX8	DGZ		
		1	2, 6	L	51, 52, 54, 55, 56	EX8	DGZ		
		1	3, 7	L	02, 06	EX8	DGZ		
		1	3, 7	L	12, 15, 16	EX8	DGZ		

Refer to Model Legend Information Bookmark

Connectors Roof
Figure 008-1615

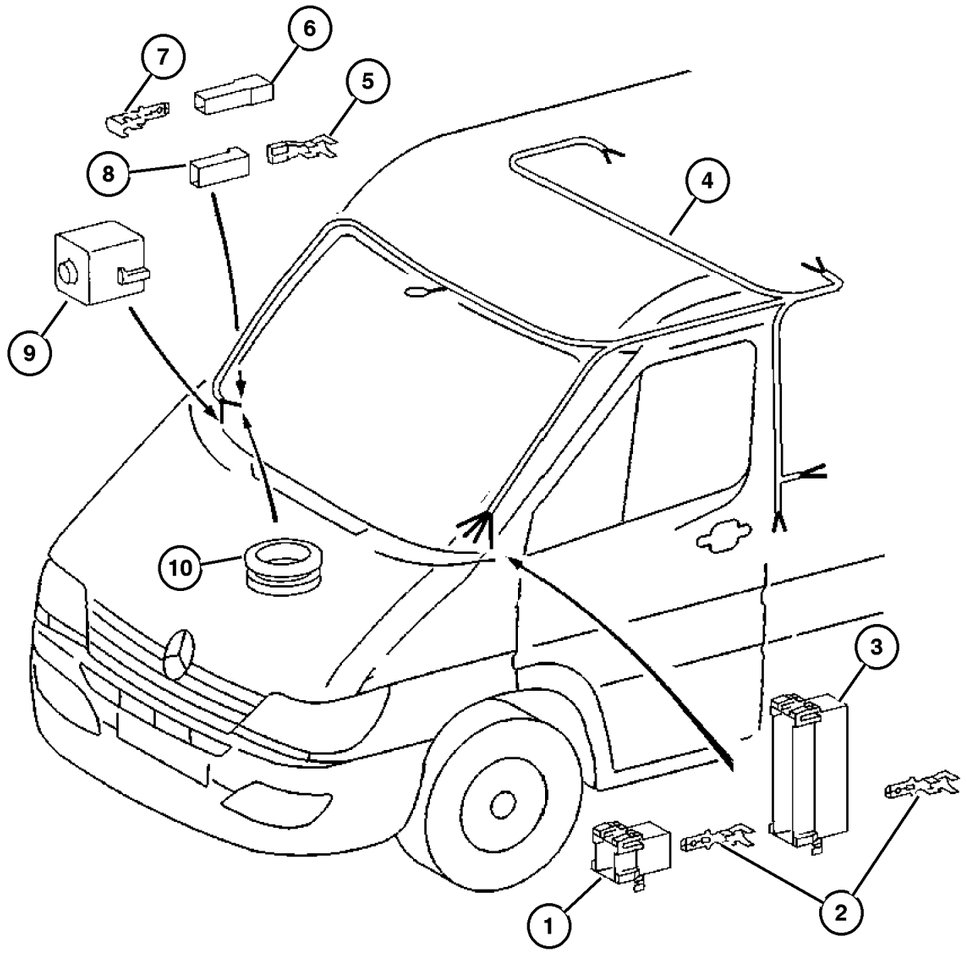

ITEM	PART NUMBER	QTY	LINE	SERIES	BODY	ENGINE	TRANS	TRIM	DESCRIPTION
1									CONNECTOR
	5120 791AA	1	2, 6	L	01, 02, 06	EX8	DGZ		
		1	2, 6	L	11, 12, 14, 15, 16	EX8	DGZ		
		1	2, 6	L	51, 52, 54, 55, 56	EX8	DGZ		
		1	3, 7	L	12, 15, 16	EX8	DGZ		
		1	3, 7	L	02, 06	EX8	DGZ		
2									TERMINAL, Male
	5133 377AA	1	2, 6	L	01, 02, 06	EX8	DGZ		Small
		1	2, 6	L	11, 12, 14, 15, 16	EX8	DGZ		Small
		1	2, 6	L	51, 52, 54, 55, 56	EX8	DGZ		Small
		1	3, 7	L	02, 06	EX8	DGZ		Small
		1	3, 7	L	12, 15, 16	EX8	DGZ		Small
	5133 378AA	99	2, 6	L	01, 02, 06	EX8	DGZ		Large
		99	2, 6	L	11, 12, 14, 15, 16	EX8	DGZ		Large
		99	2, 6	L	51, 52, 54, 55, 56	EX8	DGZ		Large
		99	3, 7	L	02, 06	EX8	DGZ		Large
		99	3, 7	L	12, 15, 16	EX8	DGZ		Large
3									CONNECTOR
	5120 794AA	1	2, 6	L	01, 02, 06	EX8	DGZ		
		1	2, 6	L	11, 12, 14, 15, 16	EX8	DGZ		
		1	2, 6	L	51, 52, 54, 55, 56	EX8	DGZ		
		1	3, 7	L	02, 06	EX8	DGZ		

Refer to Model Legend Information Bookmark

AR = Use as required - = Non illustrated part # = New this model year

March 3, 2006

« RETURN TO GROUP INDEX

»

Connectors Roof
Figure 008-1615

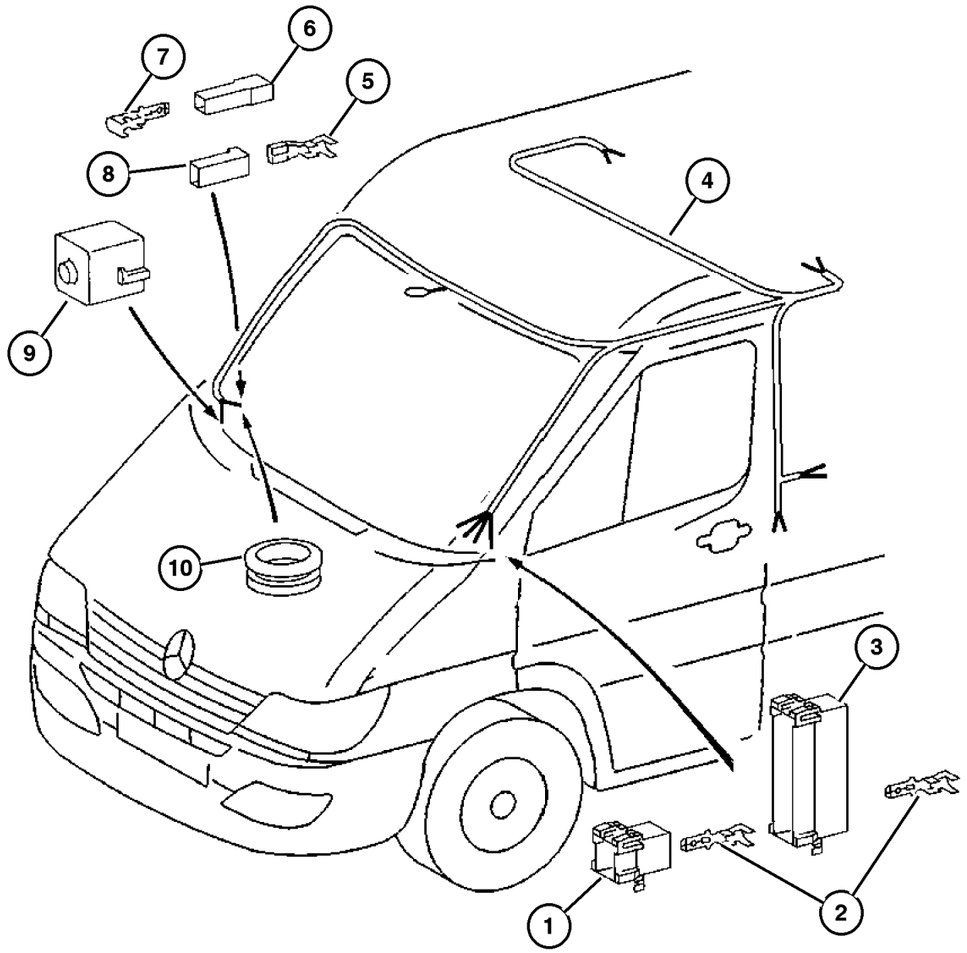

ITEM	PART NUMBER	QTY	LINE	SERIES	BODY	ENGINE	TRANS	TRIM	DESCRIPTION
		1	3, 7	L	12, 15, 16	EX8	DGZ		
4	5114 931AA	1	2, 6	L	01, 02, 06	EX8	DGZ		WIRING, Body
		1	2, 6	L	11, 12, 14, 15, 16	EX8	DGZ		
		1	2, 6	L	51, 52, 54, 55, 56	EX8	DGZ		
		1	3, 7	L	02, 06	EX8	DGZ		
		1	3, 7	L	12, 15, 16	EX8	DGZ		
5	5103 871AA	1	2, 6	L	01, 02, 06	EX8	DGZ		TERMINAL, Female
		1	2, 6	L	11, 12, 14, 15, 16	EX8	DGZ		
		1	2, 6	L	51, 52, 54, 55, 56	EX8	DGZ		
		99	3, 7	L	12, 15, 16	EX8	DGZ		
		1	3, 7	L	02, 06	EX8	DGZ		
6	5120 685AA	2	2, 6	L	11, 12, 14, 15, 16	EX8	DGZ		INSULATOR
		2	2, 6	L	51, 52, 54, 55, 56	EX8	DGZ		
		1	2, 6	L	01, 02, 06	EX8	DGZ		
		2	3, 7	L	12, 15, 16	EX8	DGZ		
		1	3, 7	L	02, 06	EX8	DGZ		
7	5133 358AA	1	2, 6	L	01, 02, 06	EX8	DGZ		TERMINAL, Male
		1	2, 6	L	11, 12, 14, 15, 16	EX8	DGZ		

Refer to Model Legend Information Bookmark

AR = Use as required - = Non illustrated part # = New this model year

March 3, 2006

« RETURN TO GROUP INDEX

Connectors Roof
Figure 008-1615

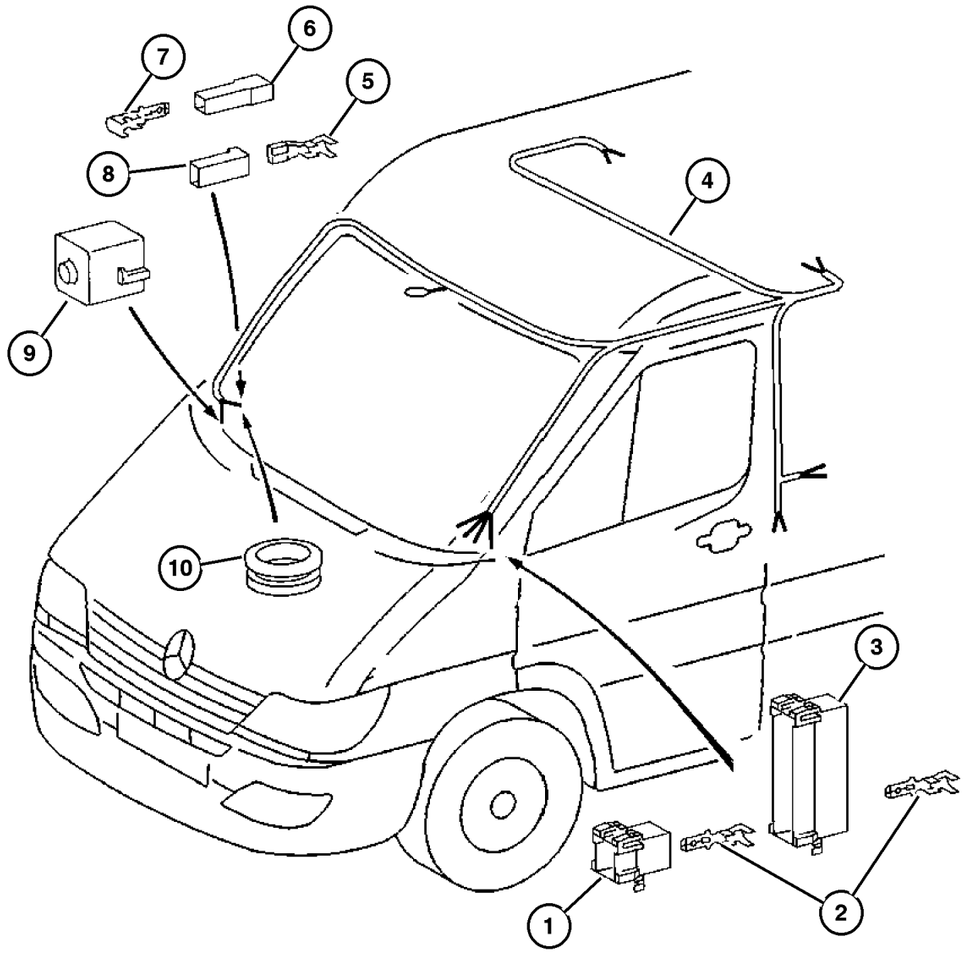

ITEM	PART NUMBER	QTY	LINE	SERIES	BODY	ENGINE	TRANS	TRIM	DESCRIPTION
		1	2, 6	L	51, 52, 54, 55, 56	EX8	DGZ		
		1	3, 7	L	02, 06	EX8	DGZ		
		1	3, 7	L	12, 15, 16	EX8	DGZ		
8	5120 684AA	1	2, 6	L	11, 12, 14, 15, 16	EX8	DGZ		CONNECTOR
		1	2, 6	L	51, 52, 54, 55, 56	EX8	DGZ		
		1	2, 6	L	01, 02, 06	EX8	DGZ		
		1	3, 7	L	12, 15, 16	EX8	DGZ		
		1	3, 7	L	02, 06	EX8	DGZ		
9	5133 401AA	1	2, 6	L	01, 02, 06	EX8	DGZ		INSULATOR, 2 Way
		1	2, 6	L	11, 12, 14, 15, 16	EX8	DGZ		
		1	2, 6	L	51, 52, 54, 55, 56	EX8	DGZ		
		1	3, 7	L	02, 06	EX8	DGZ		
		1	3, 7	L	12, 15, 16	EX8	DGZ		
10	5133 408AA	1	2, 6	L	01, 02, 06	EX8	DGZ		GROMMET, Chassis Wiring
		1	2, 6	L	11, 12, 14, 15, 16	EX8	DGZ		
		1	2, 6	L	51, 52, 54, 55, 56	EX8	DGZ		
		1	3, 7	L	02, 06	EX8	DGZ		
		1	3, 7	L	12, 15, 16	EX8	DGZ		

Refer to Model Legend Information Bookmark

AR = Use as required - = Non illustrated part # = New this model year

March 3, 2006

« RETURN TO GROUP INDEX

Connectors Front Doors
Figure 008-1620

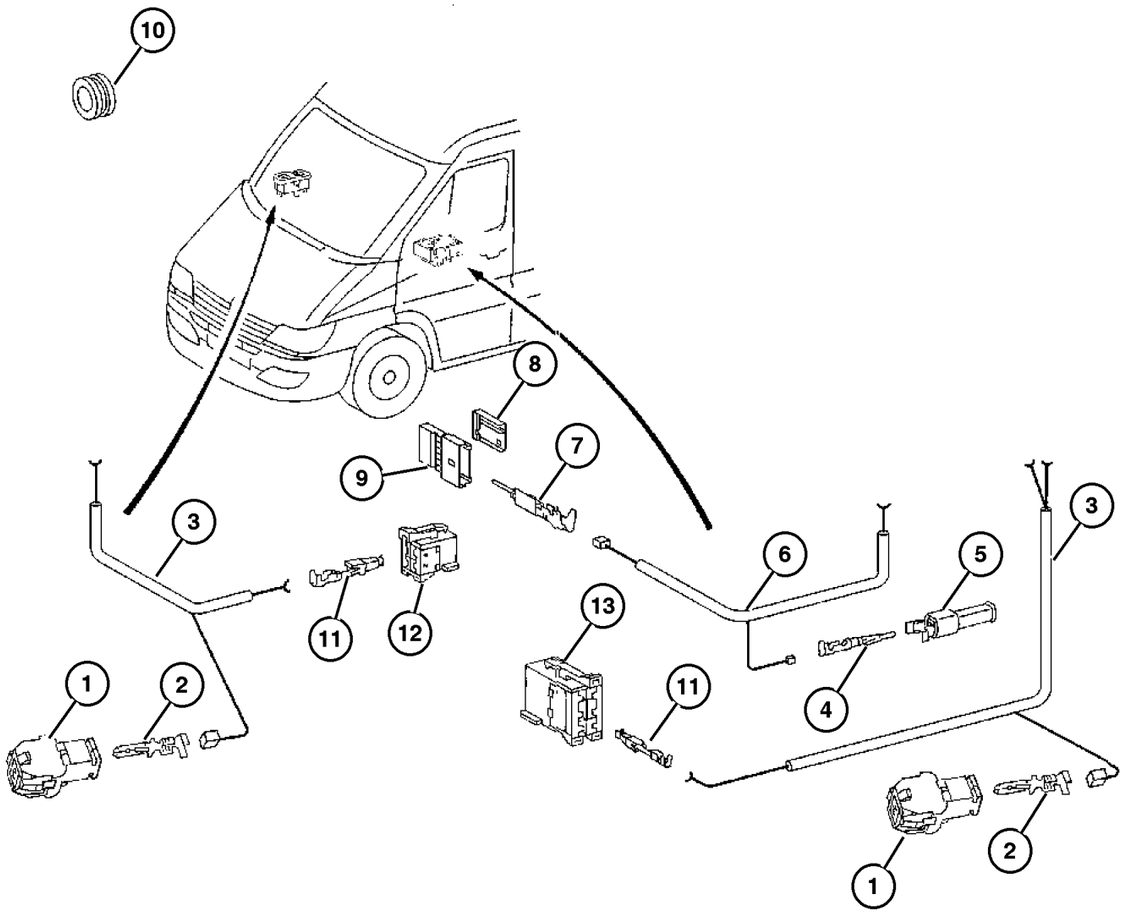

ITEM	PART NUMBER	QTY	LINE	SERIES	BODY	ENGINE	TRANS	TRIM	DESCRIPTION
1									CONNECTOR
	5120 795AA	1	2, 6	L	01, 02, 06	EX8	DGZ		
		1	2, 6	L	11, 12, 14, 15, 16	EX8	DGZ		
		1	2, 6	L	51, 52, 54, 55, 56	EX8	DGZ		
		1	3, 7	L	12, 15, 16	EX8	DGZ		
		1	3, 7	L	02, 06	EX8	DGZ		
2									TERMINAL, Male
	5133 378AA	99	2, 6	L	01, 02, 06	EX8	DGZ		
		99	2, 6	L	11, 12, 14, 15, 16	EX8	DGZ		
		99	2, 6	L	51, 52, 54, 55, 56	EX8	DGZ		
		1	3, 7	L	02, 06	EX8	DGZ		
		1	3, 7	L	12, 15, 16	EX8	DGZ		
3									WIRING, Power Window
	5120 220AA	1	2, 6	L	01, 02, 06	EX8	DGZ		Drivers door
		1	2, 6	L	11, 12, 14, 15, 16	EX8	DGZ		Drivers door
		1	2, 6	L	51, 52, 54, 55, 56	EX8	DGZ		Drivers door
		1	3, 7	L	02, 06	EX8	DGZ		Drivers door
		1	3, 7	L	12, 15, 16	EX8	DGZ		Drivers door
	5120 222AA	1	2, 6	L	01, 02, 06	EX8	DGZ		Passenger door
		1	2, 6	L	11, 12, 14, 15, 16	EX8	DGZ		Passenger door
		1	2, 6	L	51, 52, 54, 55, 56	EX8	DGZ		Passenger door
		1	3, 7	L	02, 06	EX8	DGZ		Passenger door

Refer to Model Legend Information Bookmark

Connectors Front Doors
Figure 008-1620

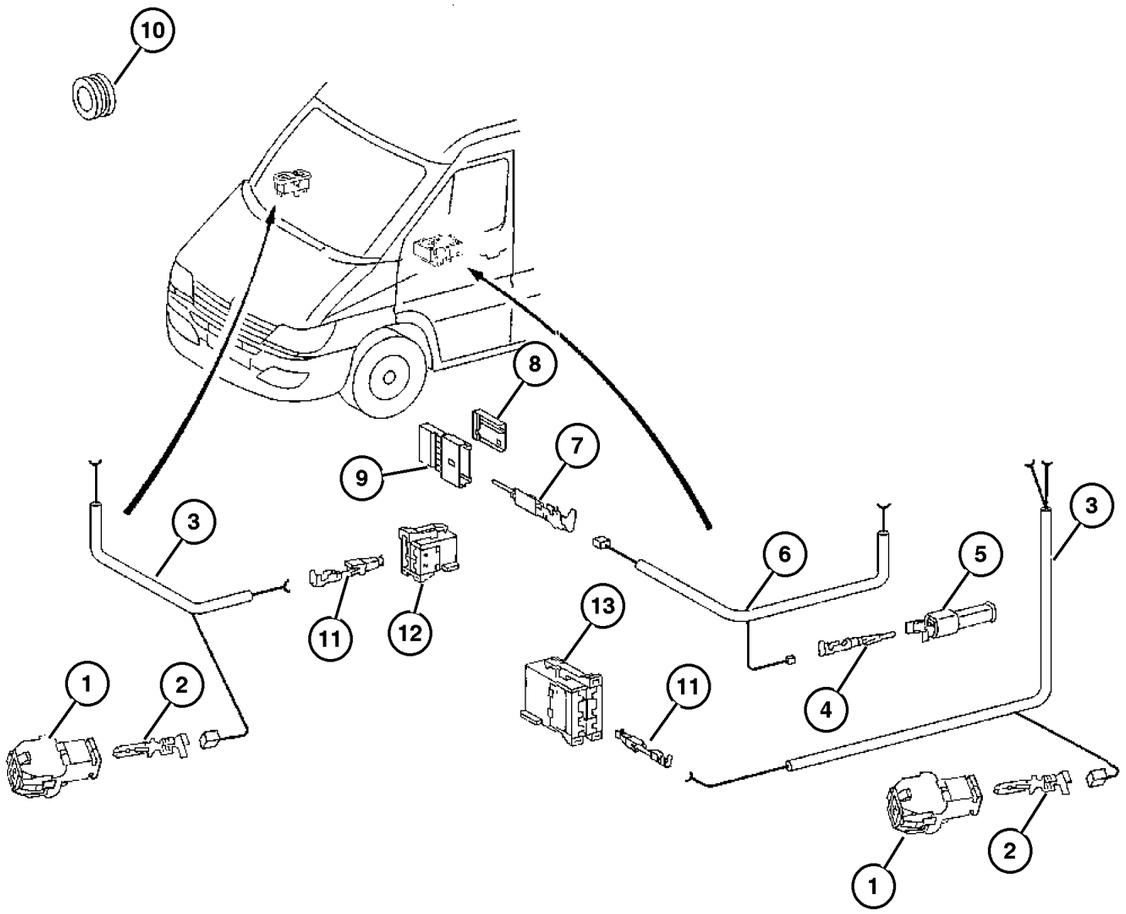

ITEM	PART NUMBER	QTY	LINE	SERIES	BODY	ENGINE	TRANS	TRIM	DESCRIPTION
		1	3, 7	L	12, 15, 16	EX8	DGZ		Passenger door
4	5133 387AA	5	2, 6	L	01, 02, 06	EX8	DGZ		TERMINAL
		5	2, 6	L	11, 12, 14, 15, 16	EX8	DGZ		
		5	2, 6	L	51, 52, 54, 55, 56	EX8	DGZ		
		5	3, 7	L	02, 06	EX8	DGZ		
		5	3, 7	L	12, 15, 16	EX8	DGZ		
5	5120 744AA	1	2, 6	L	01, 02, 06	EX8	DGZ		CONNECTOR
		1	2, 6	L	11, 12, 14, 15, 16	EX8	DGZ		
		1	2, 6	L	51, 52, 54, 55, 56	EX8	DGZ		
		1	3, 7	L	02, 06	EX8	DGZ		
		1	3, 7	L	12, 15, 16	EX8	DGZ		
6	5120 224AA	1	2, 6	L	01, 02, 06	EX8	DGZ		WIRING, Mirror Jumper
		1	2, 6	L	11, 12, 14, 15, 16	EX8	DGZ		
		1	2, 6	L	51, 52, 54, 55, 56	EX8	DGZ		
		1	3, 7	L	02, 06	EX8	DGZ		
		1	3, 7	L	12, 15, 16	EX8	DGZ		
7	5133 990AA	99	2, 6	L	01, 02, 06	EX8	DGZ		TERMINAL, Male
		99	2, 6	L	11, 12, 14, 15, 16	EX8	DGZ		

Refer to Model Legend Information Bookmark

Connectors Front Doors
Figure 008-1620

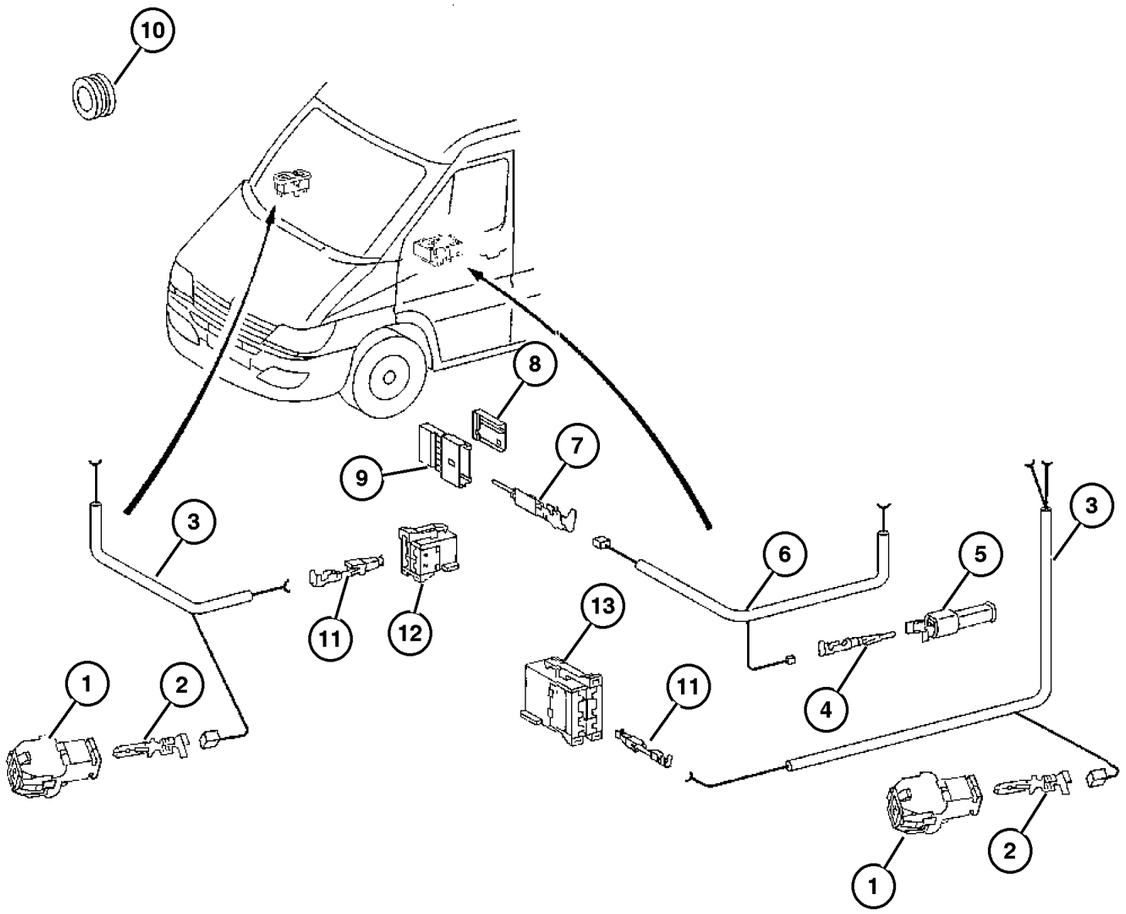

ITEM	PART NUMBER	QTY	LINE	SERIES	BODY	ENGINE	TRANS	TRIM	DESCRIPTION
		99	2, 6	L	51, 52, 54, 55, 56	EX8	DGZ		
		99	3, 7	L	02, 06	EX8	DGZ		
		99	3, 7	L	12, 15, 16	EX8	DGZ		
8	5133 331AA	1	2, 6	L	01, 02, 06	EX8	DGZ		CONNECTOR, instrument cluster
		1	2, 6	L	11, 12, 14, 15, 16	EX8	DGZ		
		1	2, 6	L	51, 52, 54, 55, 56	EX8	DGZ		
		1	3, 7	L	02, 06	EX8	DGZ		
		1	3, 7	L	12, 15, 16	EX8	DGZ		
9	5133 330AA	1	2, 6	L	01, 02, 06	EX8	DGZ		INSULATOR, 6 Way
		1	2, 6	L	11, 12, 14, 15, 16	EX8	DGZ		
		1	2, 6	L	51, 52, 54, 55, 56	EX8	DGZ		
		1	3, 7	L	02, 06	EX8	DGZ		
		1	3, 7	L	12, 15, 16	EX8	DGZ		
10	5125 942AA	2	2, 6	L	01, 02, 06	EX8	DGZ		GROMMET
		2	2, 6	L	11, 12, 14, 15, 16	EX8	DGZ		
		2	2, 6	L	51, 52, 54, 55, 56	EX8	DGZ		
		2	3, 7	L	02, 06	EX8	DGZ		
		2	3, 7	L	12, 15, 16	EX8	DGZ		
11	5103 881AA	99	2, 6	L	01, 02, 06	EX8	DGZ		TERMINAL

Refer to Model Legend Information Bookmark

AR = Use as required - = Non illustrated part # = New this model year

March 3, 2006

« RETURN TO GROUP INDEX

Connectors Front Doors
Figure 008-1620

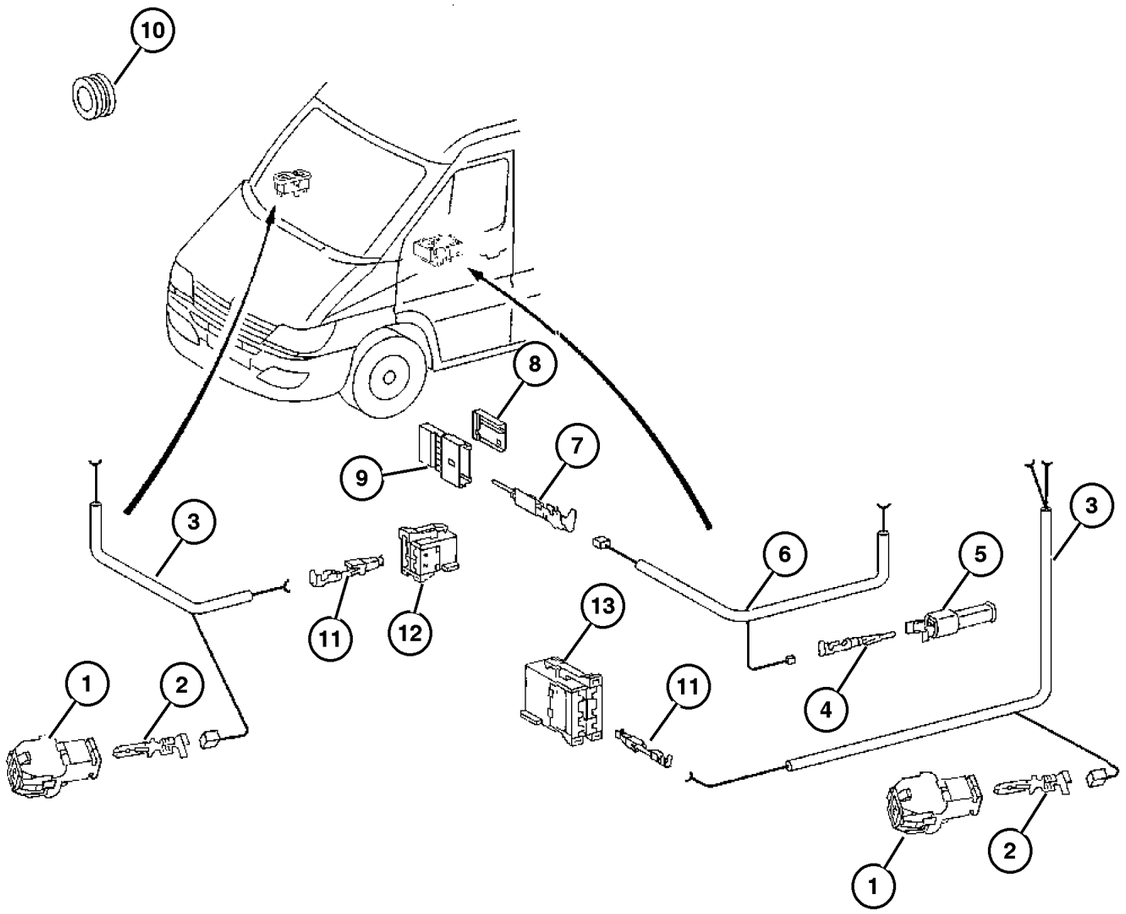

ITEM	PART NUMBER	QTY	LINE	SERIES	BODY	ENGINE	TRANS	TRIM	DESCRIPTION
		99	2, 6	L	11, 12, 14, 15, 16	EX8	DGZ		
		99	2, 6	L	51, 52, 54, 55, 56	EX8	DGZ		
		99	3, 7	L	12, 15, 16	EX8	DGZ		
12									CONNECTOR
	5120 785AA	1	2, 6	L	01, 02, 06	EX8	DGZ		
		1	2, 6	L	11, 12, 14, 15, 16	EX8	DGZ		
		1	2, 6	L	51, 52, 54, 55, 56	EX8	DGZ		
		1	3, 7	L	02, 06	EX8	DGZ		
		1	3, 7	L	12, 15, 16	EX8	DGZ		
13									CONNECTOR
	5120 786AA	1	2, 6	L	01, 02, 06	EX8	DGZ		
		1	2, 6	L	11, 12, 14, 15, 16	EX8	DGZ		
		1	2, 6	L	51, 52, 54, 55, 56	EX8	DGZ		
		1	3, 7	L	02, 06	EX8	DGZ		
		1	3, 7	L	12, 15, 16	EX8	DGZ		

Refer to Model Legend Information Bookmark

Connectors Rear Doors
Figure 008-1625

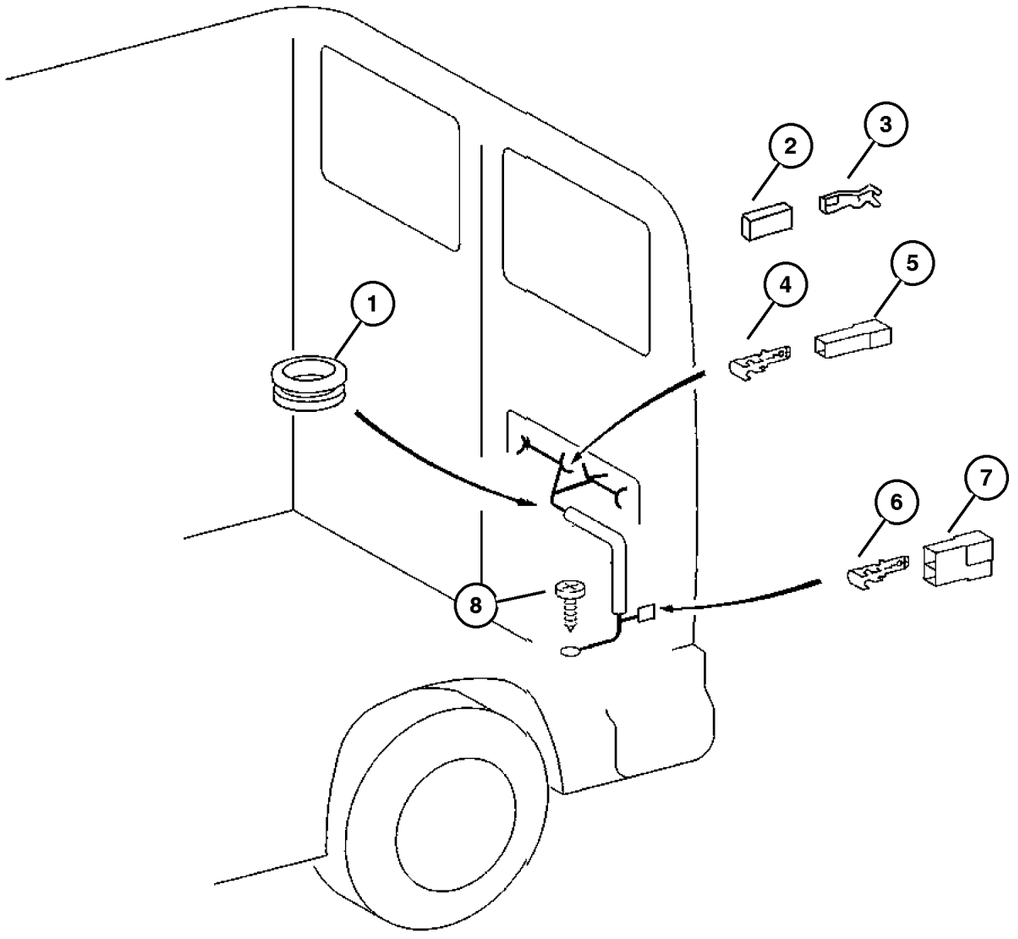

ITEM	PART NUMBER	QTY	LINE	SERIES	BODY	ENGINE	TRANS	TRIM	DESCRIPTION
1									GROMMET
	5125 931AA	1	2, 6	L	01, 02, 06	EX8	DGZ		
		1	2, 6	L	11, 12, 14, 15, 16	EX8	DGZ		
		1	2, 6	L	51, 52, 54, 55, 56	EX8	DGZ		
		2	3, 7	L	12, 15, 16	EX8	DGZ		
		1	3, 7	L	12, 15, 16	EX8	DGZ		
2									CONNECTOR
	5120 684AA	1	2, 6	L	11, 12, 14, 15, 16	EX8	DGZ		
		1	2, 6	L	51, 52, 54, 55, 56	EX8	DGZ		
		1	2, 6	L	01, 02, 06	EX8	DGZ		
		1	3, 7	L	12, 15, 16	EX8	DGZ		
		1	3, 7	L	02, 06	EX8	DGZ		
3									TERMINAL, Female
	5114 451AA	99	2, 6	L	01, 02, 06	EX8	DGZ		
		99	2, 6	L	11, 12, 14, 15, 16	EX8	DGZ		
		99	2, 6	L	51, 52, 54, 55, 56	EX8	DGZ		
		99	3, 7	L	02, 06	EX8	DGZ		
		99	3, 7	L	12, 15, 16	EX8	DGZ		
4									TERMINAL, Male
	5103 798AA	99	2, 6	L	11, 12, 14, 15, 16	EX8	DGZ		
		99	2, 6	L	51, 52, 54, 55, 56	EX8	DGZ		

Refer to Model Legend Information Bookmark

AR = Use as required - = Non illustrated part # = New this model year

March 3, 2006

« RETURN TO GROUP INDEX »

Connectors Rear Doors
Figure 008-1625

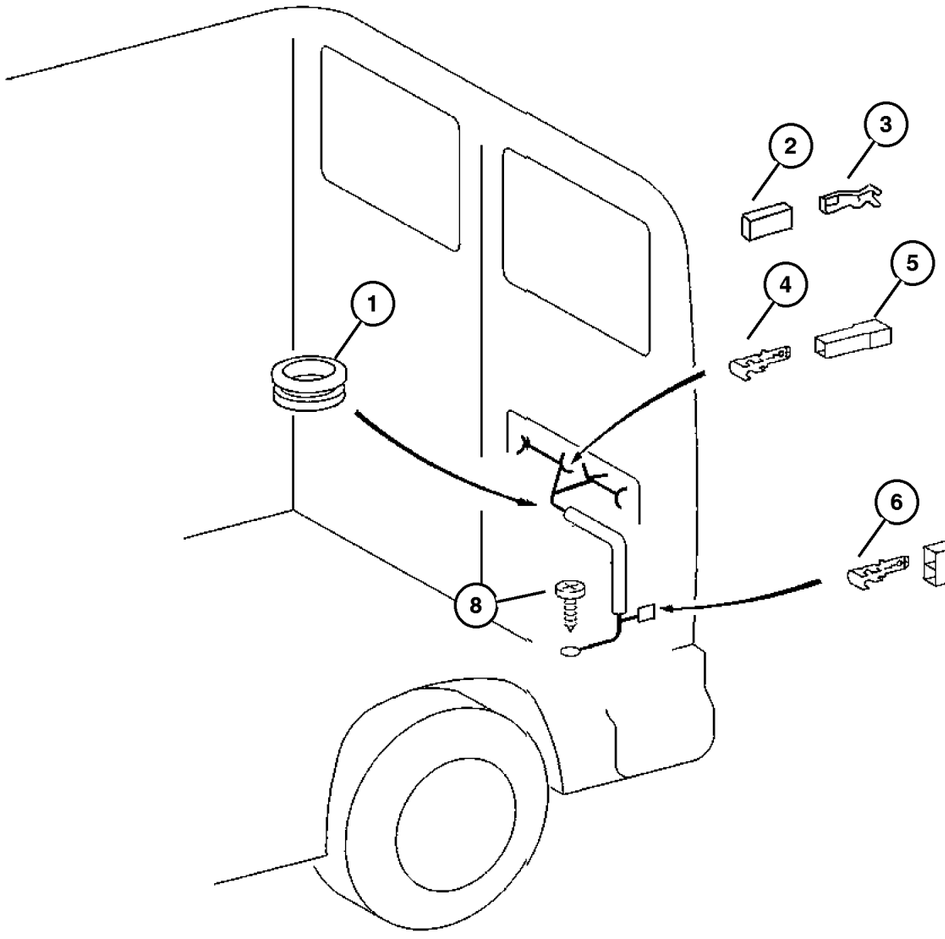

ITEM	PART NUMBER	QTY	LINE	SERIES	BODY	ENGINE	TRANS	TRIM	DESCRIPTION
		1	2, 6	L	01, 02, 06	EX8	DGZ		
		99	3, 7	L	12, 15, 16	EX8	DGZ		
		1	3, 7	L	02, 06	EX8	DGZ		
5									INSULATOR
	5120 685AA	2	2, 6	L	51, 52, 54, 55, 56	EX8	DGZ		
		2	2, 6	L	11, 12, 14, 15, 16	EX8	DGZ		
		1	2, 6	L	01, 02, 06	EX8	DGZ		
		2	3, 7	L	12, 15, 16	EX8	DGZ		
		1	3, 7	L	02, 06	EX8	DGZ		
6									CONNECTOR
	5103 751AA	1	2, 6	L	11, 12, 14, 15, 16	EX8	DGZ		
		1	2, 6	L	51, 52, 54, 55, 56	EX8	DGZ		
		1	3, 7	L	12, 15, 16	EX8	DGZ		
7									TERMINAL, Male
	5103 798AA	99	2, 6	L	11, 12, 14, 15, 16	EX8	DGZ		
		99	2, 6	L	51, 52, 54, 55, 56	EX8	DGZ		
		1	2, 6	L	01, 02, 06	EX8	DGZ		
		99	3, 7	L	12, 15, 16	EX8	DGZ		
		1	3, 7	L	02, 06	EX8	DGZ		
8									SCREW, Tapping, (NOT SERVICED) (Not Serviced)

Refer to Model Legend Information Bookmark

AR = Use as required - = Non illustrated part # = New this model year

March 3, 2006

« RETURN TO GROUP INDEX

Connectors Seating Area
Figure 008-1630

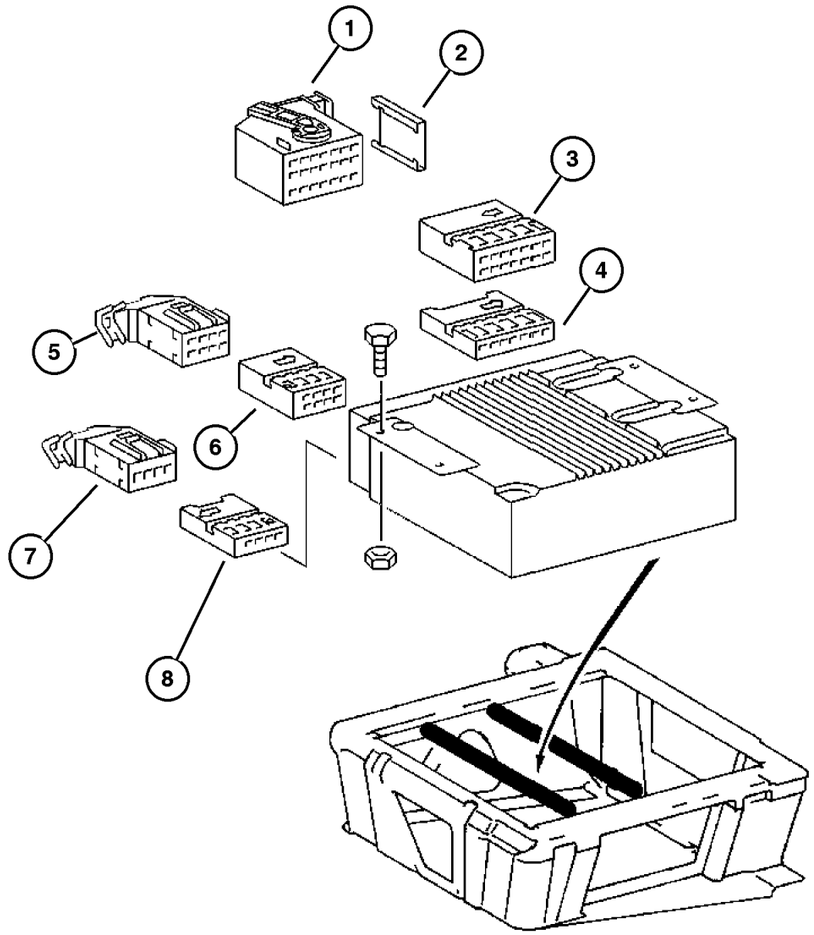

ITEM	PART NUMBER	QTY	LINE	SERIES	BODY	ENGINE	TRANS	TRIM	DESCRIPTION
1									INSULATOR
	5102 941AA	1	2, 6	L	01, 02, 06	EX8	DGZ		
		1	2, 6	L	11, 12, 14, 15, 16	EX8	DGZ		
		1	2, 6	L	51, 52, 54, 55, 56	EX8	DGZ		
		1	3, 7	L	12, 15, 16	EX8	DGZ		
		1	3, 7	L	02, 06	EX8	DGZ		
2									COVER
	5102 945AA	1	2, 6	L	01, 02, 06	EX8	DGZ		
		1	2, 6	L	11, 12, 14, 15, 16	EX8	DGZ		
		1	2, 6	L	51, 52, 54, 55, 56	EX8	DGZ		
		1	3, 7	L	02, 06	EX8	DGZ		
		1	3, 7	L	12, 15, 16	EX8	DGZ		
3									CONNECTOR
	5102 943AA	1	2, 6	L	01, 02, 06	EX8	DGZ		
		1	2, 6	L	11, 12, 14, 15, 16	EX8	DGZ		
		1	2, 6	L	51, 52, 54, 55, 56	EX8	DGZ		
		1	3, 7	L	02, 06	EX8	DGZ		
		1	3, 7	L	12, 15, 16	EX8	DGZ		
4									CONNECTOR, 7 Way
	5102 944AA	1	2, 6	L	01, 02, 06	EX8	DGZ		
		1	2, 6	L	11, 12, 14, 15, 16	EX8	DGZ		
		1	2, 6	L	51, 52, 54, 55, 56	EX8	DGZ		

Refer to Model Legend Information Bookmark

AR = Use as required - = Non illustrated part # = New this model year

March 3, 2006

« RETURN TO GROUP INDEX

»

Connectors Seating Area
Figure 008-1630

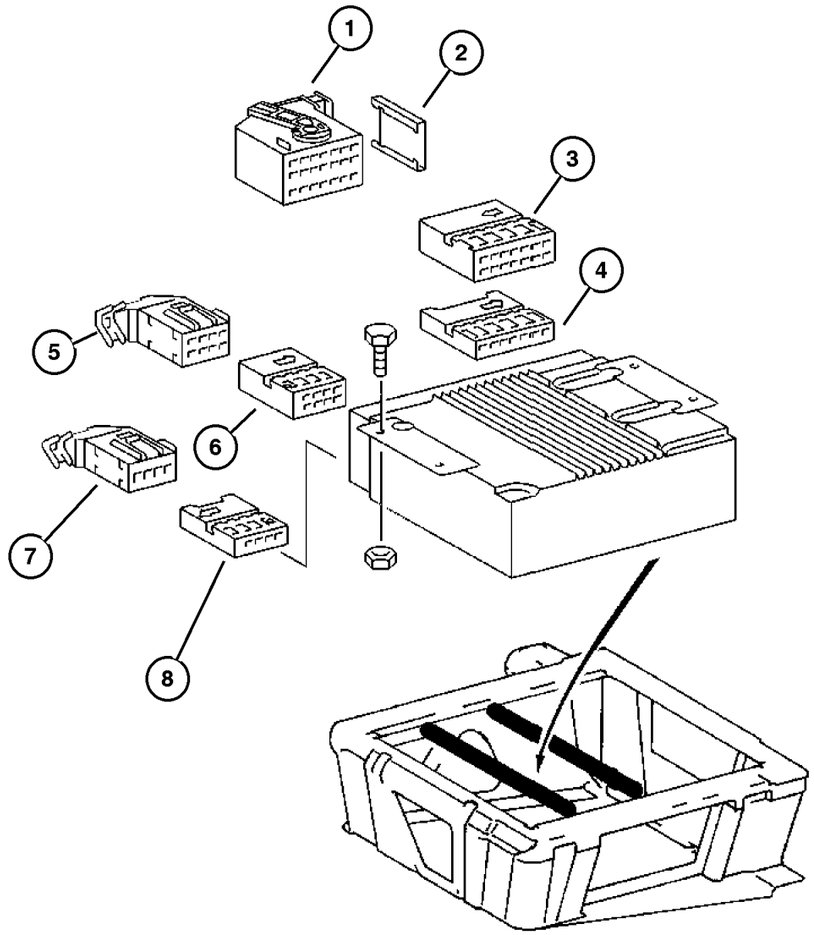

ITEM	PART NUMBER	QTY	LINE	SERIES	BODY	ENGINE	TRANS	TRIM	DESCRIPTION
		1	3, 7	L	02, 06	EX8	DGZ		
		1	3, 7	L	12, 15, 16	EX8	DGZ		
5									INSULATOR, 8 Way
	5133 339AA	1	2, 6	L	01, 02, 06	EX8	DGZ		
		1	2, 6	L	11, 12, 14, 15, 16	EX8	DGZ		
		1	2, 6	L	51, 52, 54, 55, 56	EX8	DGZ		
		1	3, 7	L	02, 06	EX8	DGZ		
		1	3, 7	L	12, 15, 16	EX8	DGZ		
6									INSULATOR, 8 Way
	5133 340AA	1	2, 6	L	01, 02, 06	EX8	DGZ		
		1	2, 6	L	11, 12, 14, 15, 16	EX8	DGZ		
		1	2, 6	L	51, 52, 54, 55, 56	EX8	DGZ		
		1	3, 7	L	02, 06	EX8	DGZ		
		1	3, 7	L	12, 15, 16	EX8	DGZ		
7									INSULATOR, 8 Way
	5133 342AA	1	2, 6	L	01, 02, 06	EX8	DGZ		
		1	2, 6	L	11, 12, 14, 15, 16	EX8	DGZ		
		1	2, 6	L	51, 52, 54, 55, 56	EX8	DGZ		
		1	3, 7	L	02, 06	EX8	DGZ		
		1	3, 7	L	12, 15, 16	EX8	DGZ		
8									INSULATOR, 8 Way
	5133 341AA	1	2, 6	L	01, 02, 06	EX8	DGZ		
		1	2, 6	L	11, 12, 14, 15, 16	EX8	DGZ		

Refer to Model Legend Information Bookmark

AR = Use as required - = Non illustrated part # = New this model year

March 3, 2006

« RETURN TO GROUP INDEX

« »

Connectors Seating Area
Figure 008-1630

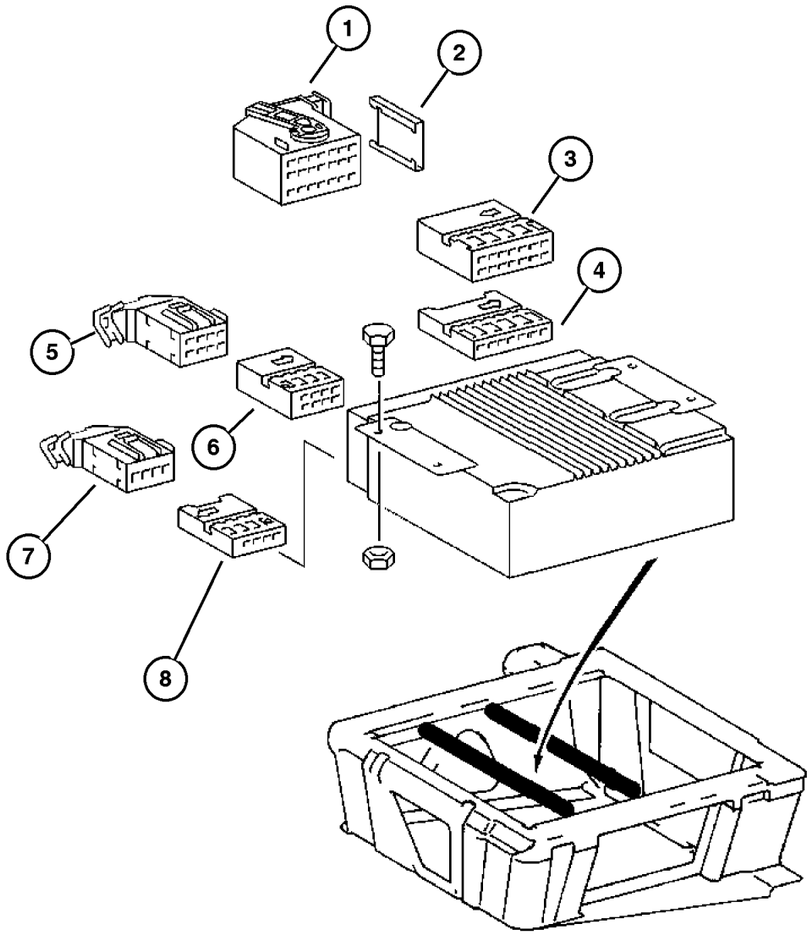

ITEM	PART NUMBER	QTY	LINE	SERIES	BODY	ENGINE	TRANS	TRIM	DESCRIPTION
		1	2, 6	L	51, 52, 54, 55, 56	EX8	DGZ		
		1	3, 7	L	02, 06	EX8	DGZ		
		1	3, 7	L	12, 15, 16	EX8	DGZ		

Refer to Model Legend Information Bookmark

AR = Use as required - = Non illustrated part # = New this model year

March 3, 2006

« RETURN TO GROUP INDEX

«

Air Bag System Drivers Side
Figure 008-1705

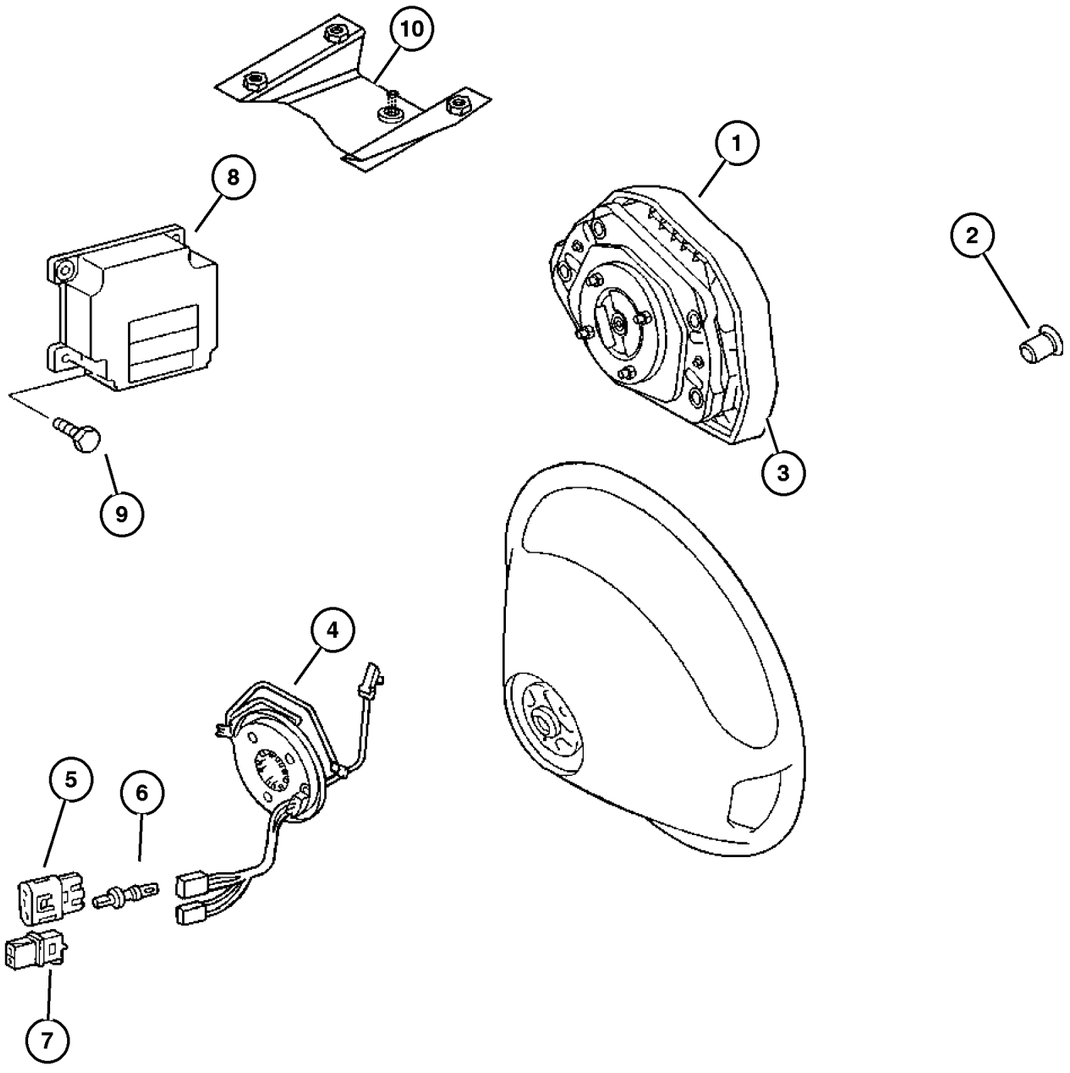

ITEM	PART NUMBER	QTY	LINE	SERIES	BODY	ENGINE	TRANS	TRIM	DESCRIPTION
1									AIR BAG, Driver
	5119 529AA	1	2	L	01, 02, 06	EX8	DGZ		Dodge emblem
		1	2	L	11, 12, 14, 15, 16	EX8	DGZ		Dodge emblem
		1	2	L	51, 52, 54, 55, 56	EX8	DGZ		Dodge emblem
		1	3	L	02, 06	EX8	DGZ		Dodge emblem
		1	3	L	12, 15, 16	EX8	DGZ		Dodge emblem
	1AR08 CSSAA	1	6	L	01, 02, 06	EX8	DGZ		Freightliner emblem
		1	6	L	11, 12, 14, 15, 16	EX8	DGZ		Freightliner emblem
		1	6	L	51, 52, 54, 55, 56	EX8	DGZ		Freightliner emblem
		1	7	L	02, 06	EX8	DGZ		Freightliner emblem
		1	7	L	12, 15, 16	EX8	DGZ		Freightliner emblem
2									SCREW
	5103 604AA	1	2, 6	L	01, 02, 06	EX8	DGZ		
		1	2, 6	L	11, 12, 14, 15, 16	EX8	DGZ		
		1	2, 6	L	51, 52, 54, 55, 56	EX8	DGZ		
		1	3, 7	L	02, 06	EX8	DGZ		
		1	3, 7	L	12, 15, 16	EX8	DGZ		
3									COVER, Steering Wheel, (NOT SERVICED) (Not Serviced)
4									CLOCKSPRING
	5104 089AA	1	2, 6	L	01, 02, 06	EX8	DGZ		
		1	2, 6	L	11, 12, 14, 15, 16	EX8	DGZ		

Refer to Model Legend Information Bookmark

Air Bag System Drivers Side
Figure 008-1705

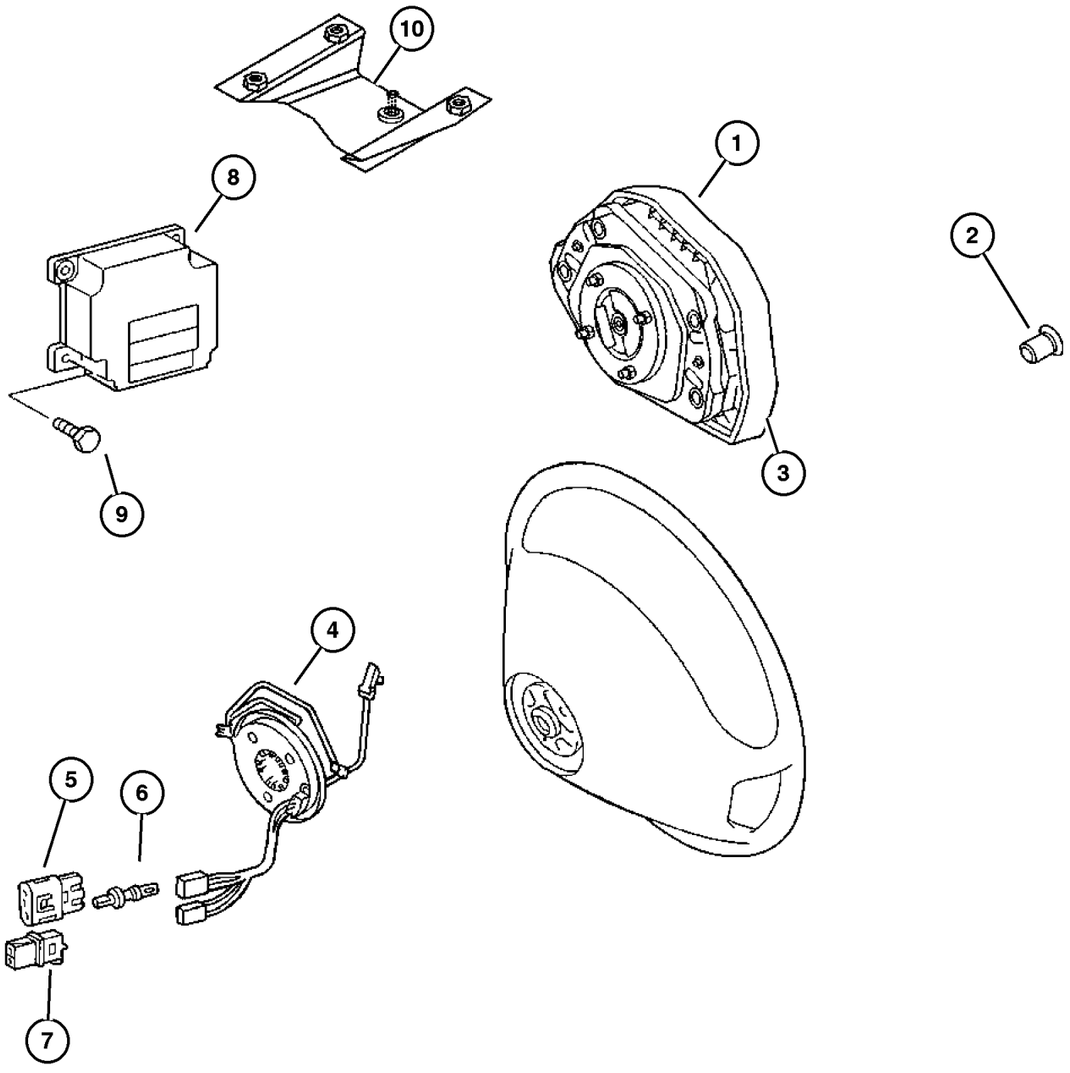

ITEM	PART NUMBER	QTY	LINE	SERIES	BODY	ENGINE	TRANS	TRIM	DESCRIPTION
		1	2, 6	L	51, 52, 54, 55, 56	EX8	DGZ		
		1	3, 7	L	02, 06	EX8	DGZ		
		1	3, 7	L	12, 15, 16	EX8	DGZ		
5	5103 904AA	1	2, 6	L	01, 02, 06	EX8	DGZ		CONNECTOR
		1	2, 6	L	11, 12, 14, 15, 16	EX8	DGZ		
		1	2, 6	L	51, 52, 54, 55, 56	EX8	DGZ		
		1	3, 7	L	02, 06	EX8	DGZ		
		1	3, 7	L	12, 15, 16	EX8	DGZ		
6	5103 828AA	99	2, 6	L	01, 02, 06	EX8	DGZ		TERMINAL
		99	2, 6	L	11, 12, 14, 15, 16	EX8	DGZ		
		99	2, 6	L	51, 52, 54, 55, 56	EX8	DGZ		
		99	3, 7	L	02, 06	EX8	DGZ		
		99	3, 7	L	12, 15, 16	EX8	DGZ		
7	5103 902AA	1	2, 6	L	01, 02, 06	EX8	DGZ		CONNECTOR
		1	2, 6	L	11, 12, 14, 15, 16	EX8	DGZ		
		1	2, 6	L	51, 52, 54, 55, 56	EX8	DGZ		
		1	3, 7	L	02, 06	EX8	DGZ		
		1	3, 7	L	12, 15, 16	EX8	DGZ		
8	5119 435AA	1	2, 6	L	01, 02, 06	EX8	DGZ		MODULE, Air Bag Control

Refer to Model Legend Information Bookmark

AR = Use as required - = Non illustrated part # = New this model year

March 3, 2006

« RETURN TO GROUP INDEX

Air Bag System Drivers Side
Figure 008-1705

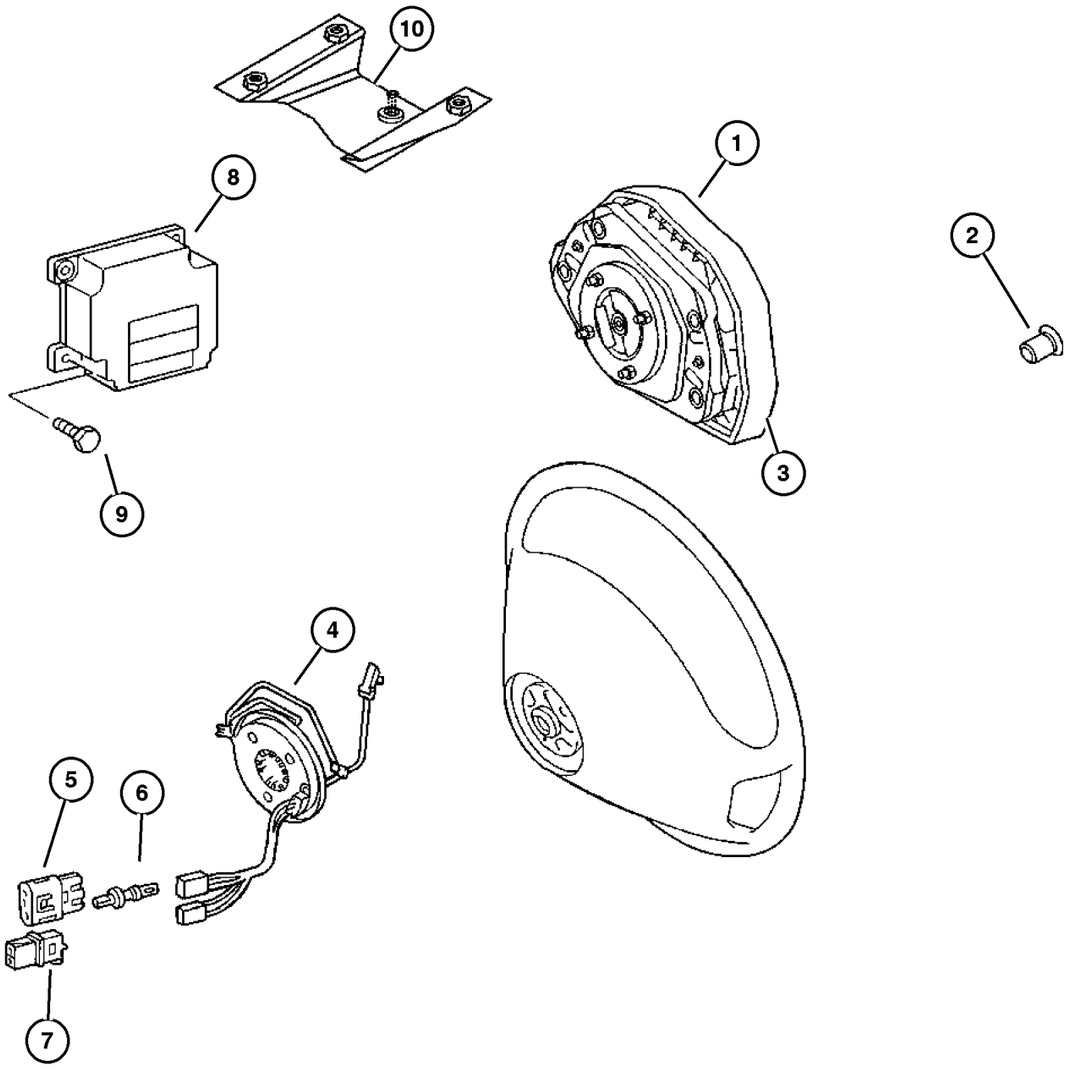

ITEM	PART NUMBER	QTY	LINE	SERIES	BODY	ENGINE	TRANS	TRIM	DESCRIPTION
		1	2, 6	L	11, 12, 14, 15, 16	EX8	DGZ		
		1	2, 6	L	51, 52, 54, 55, 56	EX8	DGZ		
		1	3, 7	L	02, 06	EX8	DGZ		
		1	3, 7	L	12, 15, 16	EX8	DGZ		
9									SCREW
	6104 005AA	2	2, 6	L	11, 12, 14, 15, 16	EX8	DGZ		
		2	2, 6	L	51, 52, 54, 55, 56	EX8	DGZ		
		3	2, 6	L	01, 02, 06	EX8	DGZ		
		2	3, 7	L	12, 15, 16	EX8	DGZ		
		3	3, 7	L	02, 06	EX8	DGZ		
10									BRACKET, Air Bag Control Module
	5121 455AA	1	2, 6	L	01, 02, 06	EX8	DGZ		
		1	2, 6	L	11, 12, 14, 15, 16	EX8	DGZ		
		1	2, 6	L	51, 52, 54, 55, 56	EX8	DGZ		
		1	3, 7	L	02, 06	EX8	DGZ		
		1	3, 7	L	12, 15, 16	EX8	DGZ		

Refer to Model Legend Information Bookmark

Air Bag System Passenger Side
Figure 008-1710

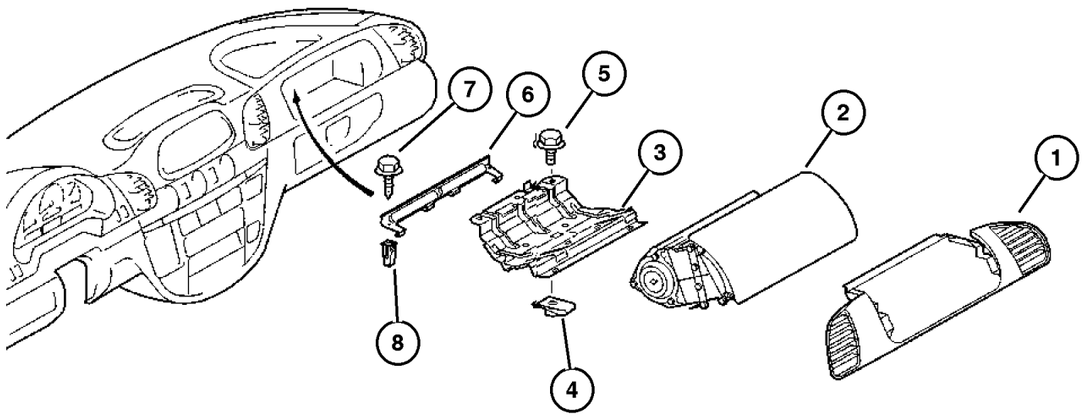

ITEM	PART NUMBER	QTY	LINE	SERIES	BODY	ENGINE	TRANS	TRIM	DESCRIPTION
1									DOOR, Passenger Air Bag
	5104 261AA	1	2, 6	L	01, 02, 06	EX8	DGZ		
		1	2, 6	L	11, 12, 14, 15, 16	EX8	DGZ		
		1	2, 6	L	51, 52, 54, 55, 56	EX8	DGZ		
		1	3, 7	L	02, 06	EX8	DGZ		
		1	3, 7	L	12, 15, 16	EX8	DGZ		
2									AIR BAG, Passenger
	5124 934AA	1	2, 6	L	01, 02, 06	EX8	DGZ		
		1	2, 6	L	11, 12, 14, 15, 16	EX8	DGZ		
		1	2, 6	L	51, 52, 54, 55, 56	EX8	DGZ		
		1	3, 7	L	02, 06	EX8	DGZ		
		1	3, 7	L	12, 15, 16	EX8	DGZ		
3									BRACKET, Air Bag
	5122 938AA	1	2, 6	L	01, 02, 06	EX8	DGZ		
		1	2, 6	L	11, 12, 14, 15, 16	EX8	DGZ		
		1	2, 6	L	51, 52, 54, 55, 56	EX8	DGZ		
		1	3, 7	L	02, 06	EX8	DGZ		
		1	3, 7	L	12, 15, 16	EX8	DGZ		
4									NUT, Clip-On
	5133 420AA	2	2, 6	L	01, 02, 06	EX8	DGZ		
		2	2, 6	L	11, 12, 14, 15, 16	EX8	DGZ		
		2	2, 6	L	51, 52, 54, 55, 56	EX8	DGZ		

Refer to Model Legend Information Bookmark

AR = Use as required - = Non illustrated part # = New this model year

March 3, 2006

« RETURN TO GROUP INDEX

»

Air Bag System Passenger Side
Figure 008-1710

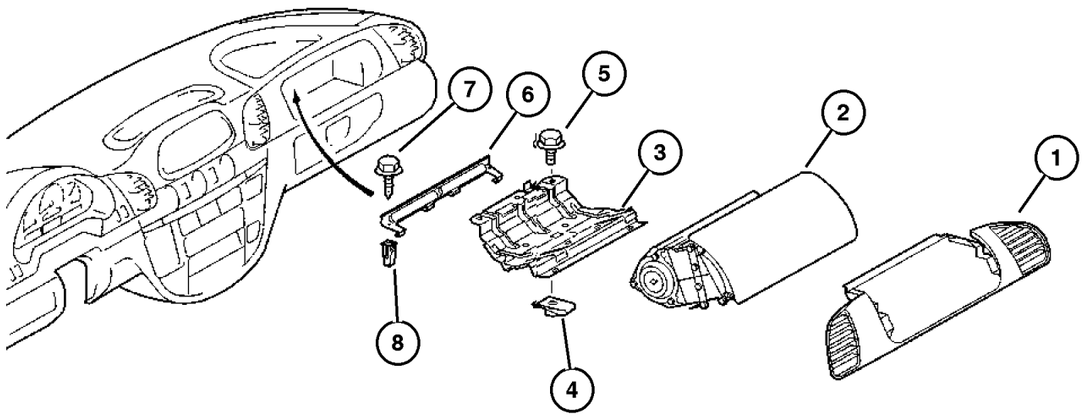

ITEM	PART NUMBER	QTY	LINE	SERIES	BODY	ENGINE	TRANS	TRIM	DESCRIPTION
		1	3, 7	L	02, 06	EX8	DGZ		
		1	3, 7	L	12, 15, 16	EX8	DGZ		
5									SCREW
	6104 565AA	2	2, 6	L	01, 02, 06	EX8	DGZ		
		2	2, 6	L	11, 12, 14, 15, 16	EX8	DGZ		
		2	2, 6	L	51, 52, 54, 55, 56	EX8	DGZ		
		2	3, 7	L	02, 06	EX8	DGZ		
		2	3, 7	L	12, 15, 16	EX8	DGZ		
6									BRACKET, Instrument Panel
	5122 388AA	1	2, 6	L	01, 02, 06	EX8			
		1	2, 6	L	11, 12, 14, 15, 16	EX8			
		1	2, 6	L	51, 52, 54, 55, 56	EX8			
		1	3, 7	L	02, 06	EX8			
		1	3, 7	L	12, 15, 16	EX8			
7									SCREW, (NOT SERVICED) (Not Serviced)
8									NUT, Plastic Snap-in
	5125 576AA	2	2, 6	L	01, 02, 06	EX8	DGZ		
		2	2, 6	L	11, 12, 14, 15, 16	EX8	DGZ		
		2	2, 6	L	51, 52, 54, 55, 56	EX8	DGZ		
		2	3, 7	L	02, 06	EX8	DGZ		
		2	3, 7	L	12, 15, 16	EX8	DGZ		

Refer to Model Legend Information Bookmark

Park Assist, Back up Detection System
Figure 008-1805

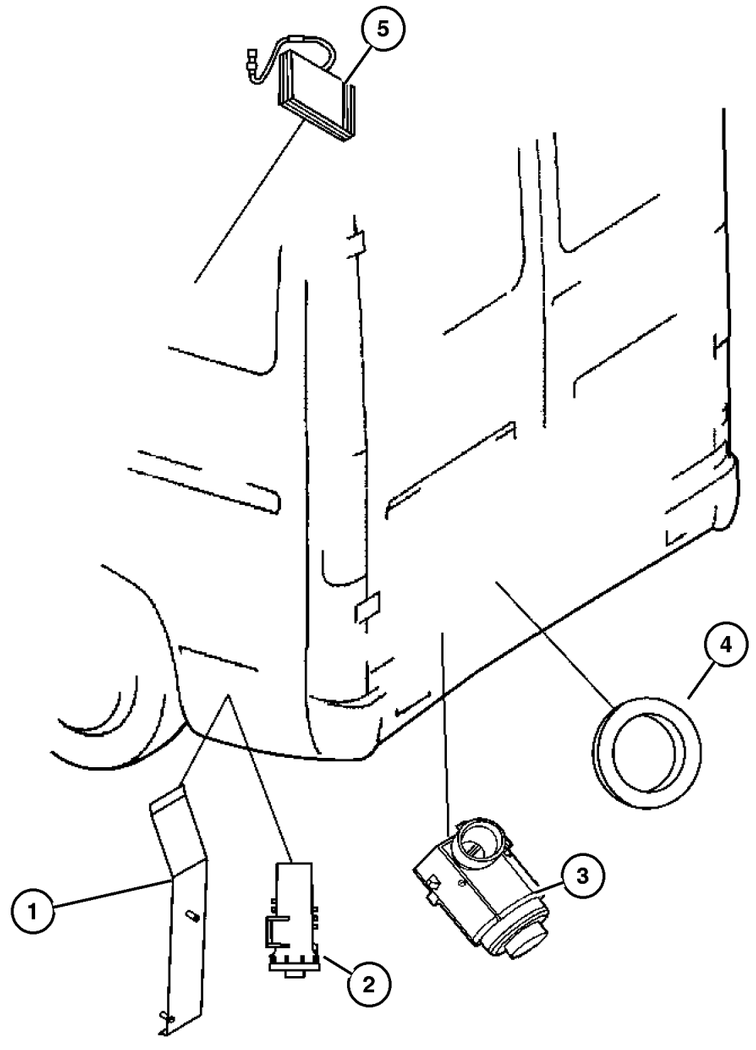

ITEM	PART NUMBER	QTY	LINE	SERIES	BODY	ENGINE	TRANS	TRIM	DESCRIPTION
1									BRACKET, Parktronics
	5121 731AA	1	2, 6	L	11, 12, 14, 15, 16	EX8	DGZ		
		1	2, 6	L	51, 52, 54, 55, 56	EX8	DGZ		
		1	3, 7	L	12, 15, 16	EX8	DGZ		
2									MODULE, Parking Assist
	5120 828AA	1	2, 6	L	11, 12, 14, 15, 16	EX8	DGZ		
		1	2, 6	L	51, 52, 54, 55, 56	EX8	DGZ		
		1	3, 7	L	12, 15, 16	EX8	DGZ		
3									SENSOR, Park Assist
	5120 341AA	4	2, 6	L	11, 12, 14, 15, 16	EX8	DGZ		
		4	2, 6	L	51, 52, 54, 55, 56	EX8	DGZ		
		4	3, 7	L	12, 15, 16	EX8	DGZ		
4									SPACER, Sensor
	5120 375AA	4	2, 6	L	11, 12, 14, 15, 16	EX8	DGZ		
		4	2, 6	L	51, 52, 54, 55, 56	EX8	DGZ		
		4	3, 7	L	12, 15, 16	EX8	DGZ		
5									DISPLAY, Parking Assist, AUDIOVOX SPECIALIZED APPLICATIONS, INC (ASA) ~~23319 COOPER DRIVE ~~ELKHART, IN 48514 ~~(219) 254-3135, (NOT SERVICED) (Not Serviced)
-6									ALARM

Refer to Model Legend Information Bookmark

AR = Use as required - = Non illustrated part # = New this model year

March 3, 2006

« RETURN TO GROUP INDEX »

Park Assist, Back up Detection System
Figure 008-1805

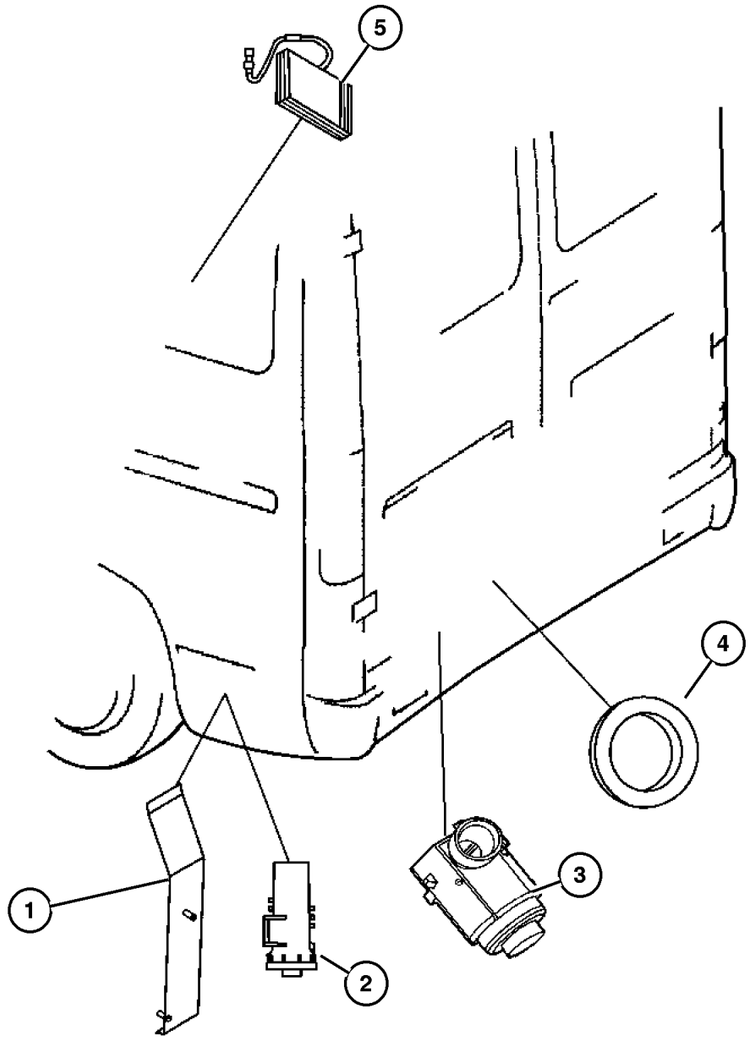

ITEM	PART NUMBER	QTY	LINE	SERIES	BODY	ENGINE	TRANS	TRIM	DESCRIPTION
	5135 946AA-	1	2, 6	L	01, 02, 06	EX8	DGZ		
		1	2, 6	L	11, 12, 14, 15, 16	EX8	DGZ		
		1	2, 6	L	51, 52, 54, 55, 56	EX8	DGZ		
		1	3, 7	L	02, 06	EX8	DGZ		
		1	3, 7	L	12, 15, 16	EX8	DGZ		

Refer to Model Legend Information Bookmark

Glow Plugs
Figure 008-1910

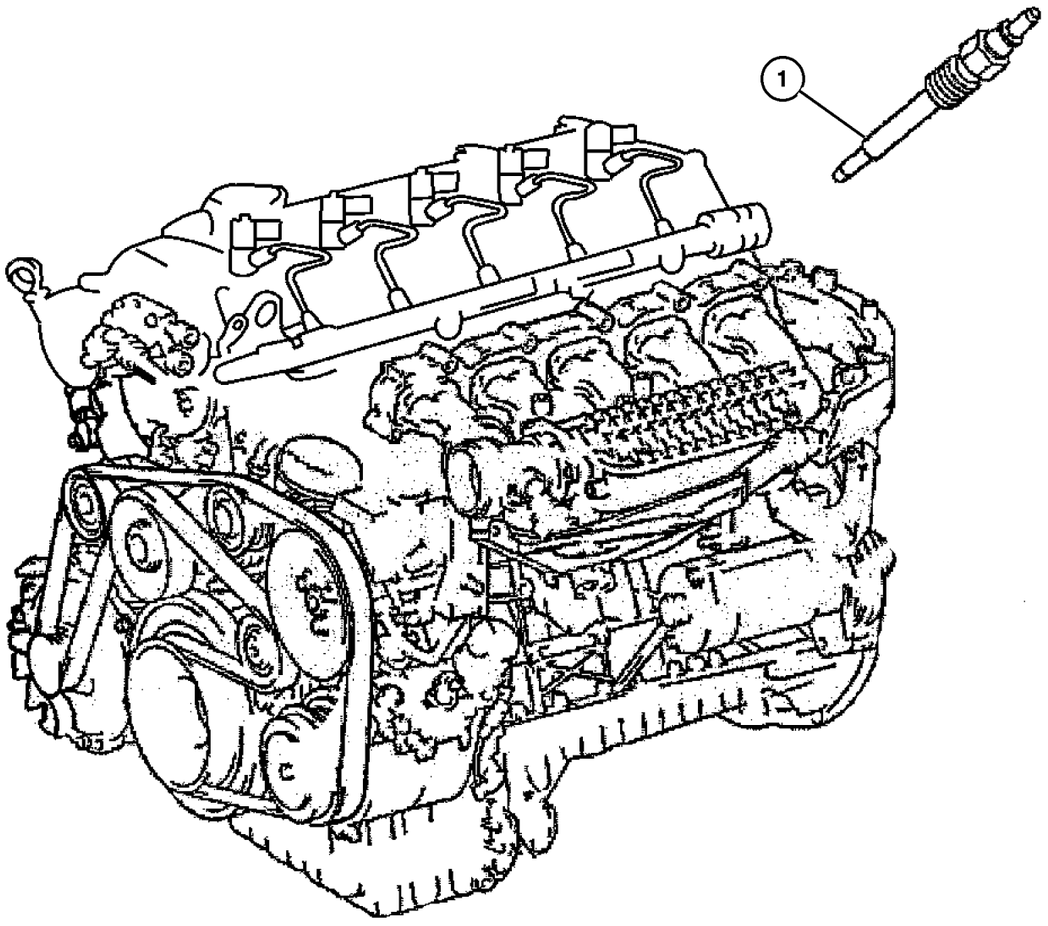

ITEM	PART NUMBER	QTY	LINE	SERIES	BODY	ENGINE	TRANS	TRIM	DESCRIPTION
1	5117 592AA	5	2, 3, 6, 7	L		EX8	DGZ		PLUG, Glow
-2									RELAY, Electrical
	5170 859AA-	1	2, 6	L	01, 02, 06	EX8	DGZ		
		1	2, 6	L	11, 12, 14, 15, 16	EX8	DGZ		
		1	2, 6	L	51, 52, 54, 55, 56	EX8	DGZ		
		1	3, 7	L	02, 06	EX8	DGZ		
		1	3, 7	L	12, 15, 16	EX8	DGZ		

Refer to Model Legend Information Bookmark

AR = Use as required - = Non illustrated part # = New this model year

March 3, 2006

« RETURN TO GROUP INDEX

Group – 08A

Instrument Panel and Radios and Consoles

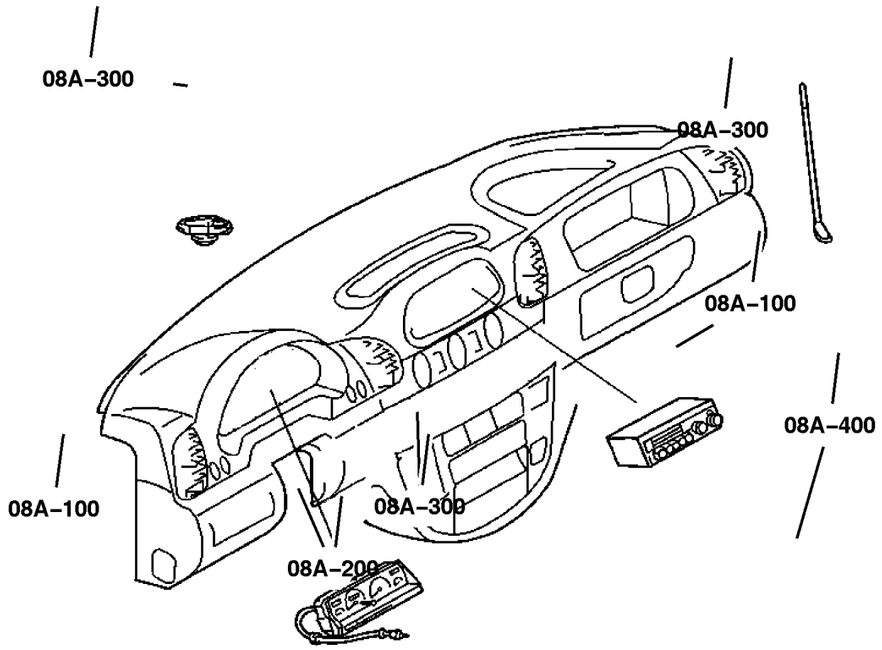

08A–100	08A–200	08A–300	08A–400
Instrument Panel	Instrument Panel Cluster	Radio, Antenna, and Speakers	Consoles
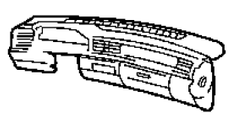	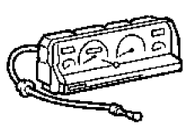	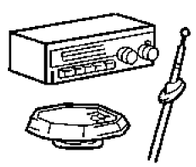	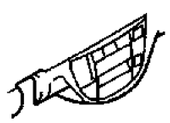

GROUP 8A - Instrument Panel and Radios and Consoles

Illustration Title	Group-Fig. No.
Instrument Panel	
Instrument Panel	Fig. 08A-105
Instrument Panel Bezel and Related Parts	Fig. 08A-110
Ash Reciever and Glove Box	Fig. 08A-115
Instrument Panel Cover and Related Parts	Fig. 08A-120
Instrument Panel Reinforcement	Fig. 08A-125
Instrument Panel Cluster	
Instrument Panel Cluster	Fig. 08A-205
Radio, Antenna, and Speakers	
Radio	Fig. 08A-305
Antenna	Fig. 08A-310
Speakers	Fig. 08A-315
Consoles	
Console Cup Holder	Fig. 08A-405

Instrument Panel
Figure 08A-105

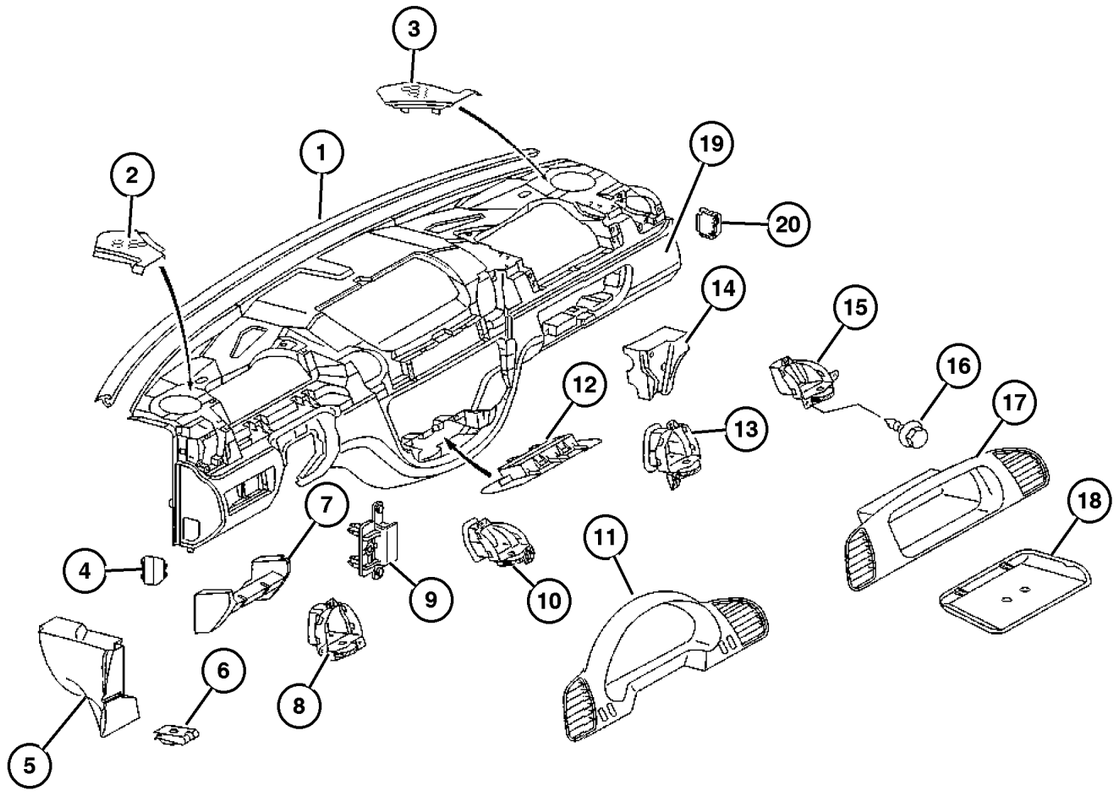

ITEM	PART NUMBER	QTY	LINE	SERIES	BODY	ENGINE	TRANS	TRIM	DESCRIPTION
1									SEAL, Windshield
	5122 955AA	1	2, 6	L	01, 02, 06	EX8	DGZ		
		1	2, 6	L	11, 12, 14, 15, 16	EX8	DGZ		
		1	2, 6	L	51, 52, 54, 55, 56	EX8	DGZ		
		1	3, 7	L	02, 06	EX8	DGZ		
		1	3, 7	L	12, 15, 16	EX8	DGZ		
2									COVER, Speaker Opening
	5104 270AA	1	2, 6	L	01, 02, 06	EX8	DGZ		
		1	2, 6	L	11, 12, 14, 15, 16	EX8	DGZ		
		1	2, 6	L	51, 52, 54, 55, 56	EX8	DGZ		
		1	3, 7	L	02, 06	EX8	DGZ		
		1	3, 7	L	12, 15, 16	EX8	DGZ		
3									COVER, Speaker Opening
	5104 269AA	1	2, 6	L	01, 02, 06	EX8	DGZ		
		1	2, 6	L	11, 12, 14, 15, 16	EX8	DGZ		
		1	2, 6	L	51, 52, 54, 55, 56	EX8	DGZ		
		1	3, 7	L	02, 06	EX8	DGZ		
		1	3, 7	L	12, 15, 16	EX8	DGZ		
4									PLUG, Instrument Panel
	5103 919AA	2	2, 6	L	01, 02, 06	EX8	DGZ		
		2	2, 6	L	11, 12, 14, 15, 16	EX8	DGZ		
		2	2, 6	L	51, 52, 54, 55, 56	EX8	DGZ		

Refer to Model Legend Information Bookmark

Instrument Panel
Figure 08A-105

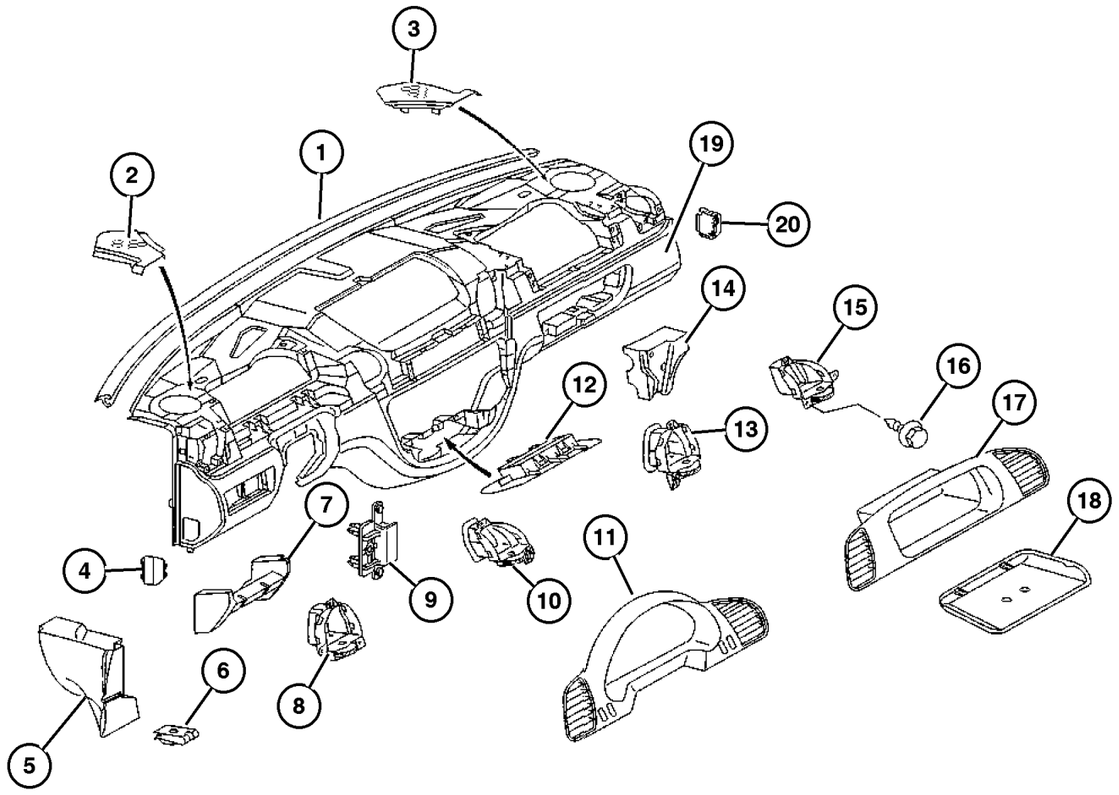

ITEM	PART NUMBER	QTY	LINE	SERIES	BODY	ENGINE	TRANS	TRIM	DESCRIPTION
		2	3, 7	L	02, 06	EX8	DGZ		
		2	3, 7	L	12, 15, 16	EX8	DGZ		
5									END CAP, Instrument Panel
	5122 934AA	1	2, 6	L	01, 02, 06	EX8	DGZ		
		1	2, 6	L	11, 12, 14, 15, 16	EX8	DGZ		
		1	2, 6	L	51, 52, 54, 55, 56	EX8	DGZ		
		1	3, 7	L	02, 06	EX8	DGZ		
		1	3, 7	L	12, 15, 16	EX8	DGZ		
6									NUT, Spring U Type
	5133 416AA	99	2, 6	L	01, 02, 06	EX8	DGZ		
		99	2, 6	L	11, 12, 14, 15, 16	EX8	DGZ		
		99	2, 6	L	51, 52, 54, 55, 56	EX8	DGZ		
		4	3, 7	L	02, 06	EX8	DGZ		
		4	3, 7	L	12, 15, 16	EX8	DGZ		
7									PAD, Instrument Panel
	5122 933AA	1	2, 6	L	01, 02, 06	EX8	DGZ		
		1	2, 6	L	11, 12, 14, 15, 16	EX8	DGZ		
		1	2, 6	L	51, 52, 54, 55, 56	EX8	DGZ		
		1	3, 7	L	02, 06	EX8	DGZ		
		1	3, 7	L	12, 15, 16	EX8	DGZ		
8									OUTLET, Air
	5104 252AA	1	2, 6	L	01, 02, 06	EX8	DGZ		Cluster Bezel, Left
		1	2, 6	L	11, 12, 14, 15, 16	EX8	DGZ		Cluster Bezel, Left

Refer to Model Legend Information Bookmark

AR = Use as required - = Non illustrated part # = New this model year

March 3, 2006

« RETURN TO GROUP INDEX

Instrument Panel
Figure 08A-105

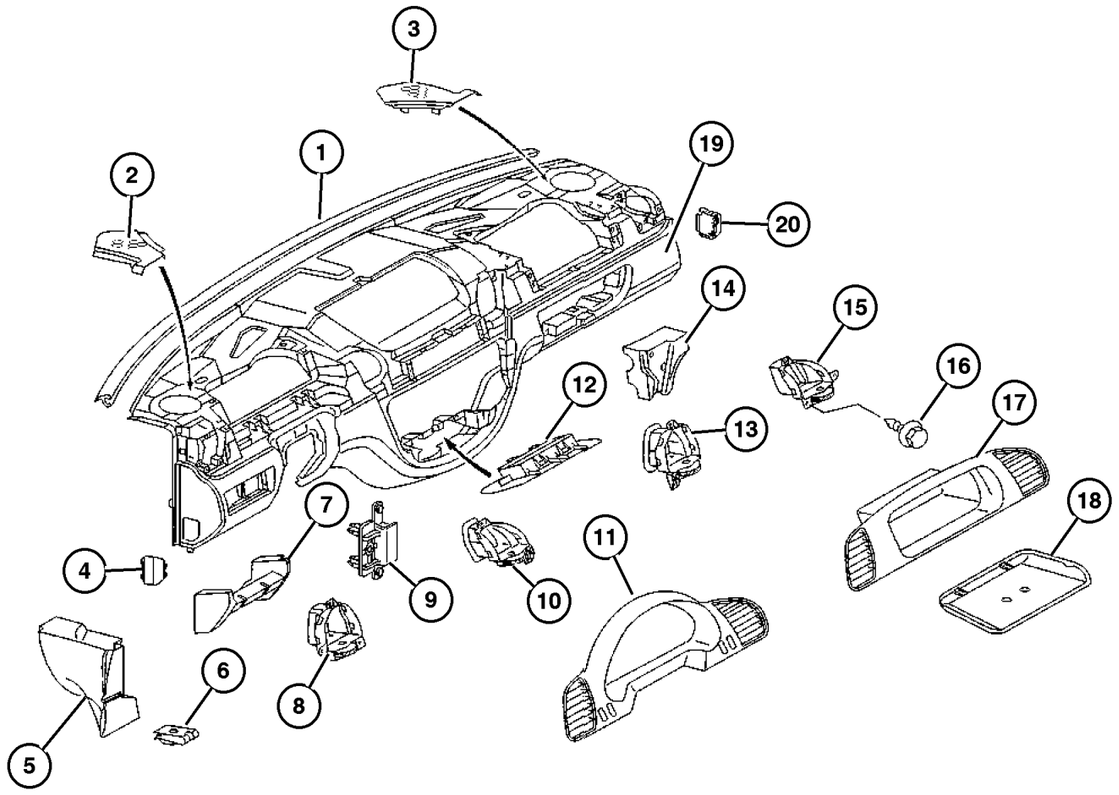

ITEM	PART NUMBER	QTY	LINE	SERIES	BODY	ENGINE	TRANS	TRIM	DESCRIPTION
		1	2, 6	L	51, 52, 54, 55, 56	EX8	DGZ		Cluster Bezel, Left
		1	3, 7	L	02, 06	EX8	DGZ		Cluster Bezel, Left
		1	3, 7	L	12, 15, 16	EX8	DGZ		Cluster Bezel, Left
9	5122 891AA	2	2, 6	L	01, 02, 06	EX8	DGZ		BRACKET, Mounting Heater Control
		2	2, 6	L	11, 12, 14, 15, 16	EX8	DGZ		Heater Control
		2	2, 6	L	51, 52, 54, 55, 56	EX8	DGZ		Heater Control
		2	3, 7	L	02, 06	EX8	DGZ		Heater Control
		2	3, 7	L	12, 15, 16	EX8	DGZ		Heater Control
10	5104 253AA	1	2, 6	L	01, 02, 06	EX8	DGZ		OUTLET, Air Cluster Bezel, Right
		1	2, 6	L	11, 12, 14, 15, 16	EX8	DGZ		Cluster Bezel, Right
		1	2, 6	L	51, 52, 54, 55, 56	EX8	DGZ		Cluster Bezel, Right
		1	3, 7	L	02, 06	EX8	DGZ		Cluster Bezel, Right
		1	3, 7	L	12, 15, 16	EX8	DGZ		Cluster Bezel, Right
11	5104 262AA	1	2, 6	L	01, 02, 06	EX8	DGZ		BEZEL, Cluster
		1	2, 6	L	11, 12, 14, 15, 16	EX8	DGZ		
		1	2, 6	L	51, 52, 54, 55, 56	EX8	DGZ		
		1	3, 7	L	02, 06	EX8	DGZ		
		1	3, 7	L	12, 15, 16	EX8	DGZ		
12	5122 927AA	1	2, 6	L	01, 02, 06	EX8	DGZ		COVER, Instrument Panel End Cap

Refer to Model Legend Information Bookmark

AR = Use as required - = Non illustrated part # = New this model year

March 3, 2006

Instrument Panel
Figure 08A-105

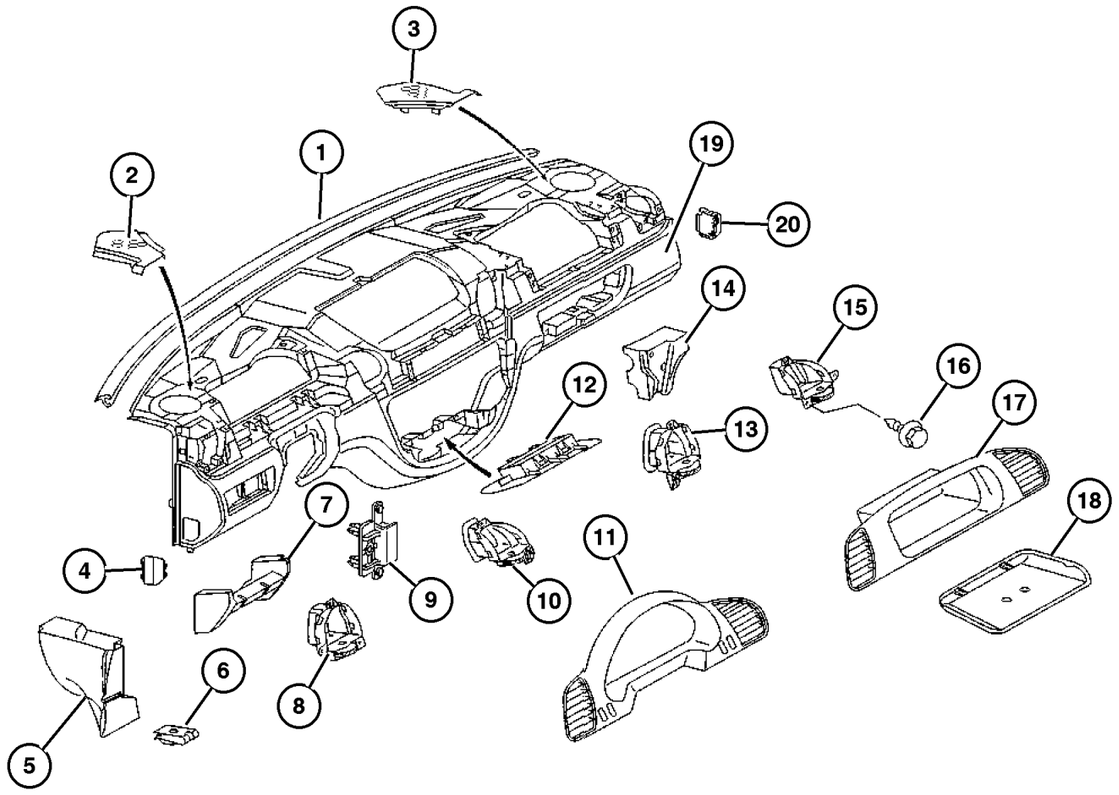

ITEM	PART NUMBER	QTY	LINE	SERIES	BODY	ENGINE	TRANS	TRIM	DESCRIPTION
		1	2, 6	L	11, 12, 14, 15, 16	EX8	DGZ		End Cap
		1	2, 6	L	51, 52, 54, 55, 56	EX8	DGZ		End Cap
		1	3, 7	L	02, 06	EX8	DGZ		End Cap
		1	3, 7	L	12, 15, 16	EX8	DGZ		End Cap
13									OUTLET, Air
	5104 256AA	1	2, 6	L	01, 02, 06	EX8	DGZ		
		1	2, 6	L	11, 12, 14, 15, 16	EX8	DGZ		
		1	2, 6	L	51, 52, 54, 55, 56	EX8	DGZ		
		1	3, 7	L	02, 06	EX8	DGZ		
		1	3, 7	L	12, 15, 16	EX8	DGZ		
14									PAD, Instrument Panel
	5122 932AA	1	2, 6	L	01, 02, 06	EX8	DGZ		
		1	2, 6	L	11, 12, 14, 15, 16	EX8	DGZ		
		1	2, 6	L	51, 52, 54, 55, 56	EX8	DGZ		
		1	3, 7	L	02, 06	EX8	DGZ		
		1	3, 7	L	12, 15, 16	EX8	DGZ		
15									OUTLET, Air
	5104 258AA	1	2, 6	L	01, 02, 06	EX8	DGZ		
		1	2, 6	L	11, 12, 14, 15, 16	EX8	DGZ		
		1	2, 6	L	51, 52, 54, 55, 56	EX8	DGZ		
		1	3, 7	L	02, 06	EX8	DGZ		
		1	3, 7	L	12, 15, 16	EX8	DGZ		
16									SCREW

Refer to Model Legend Information Bookmark

Instrument Panel
Figure 08A-105

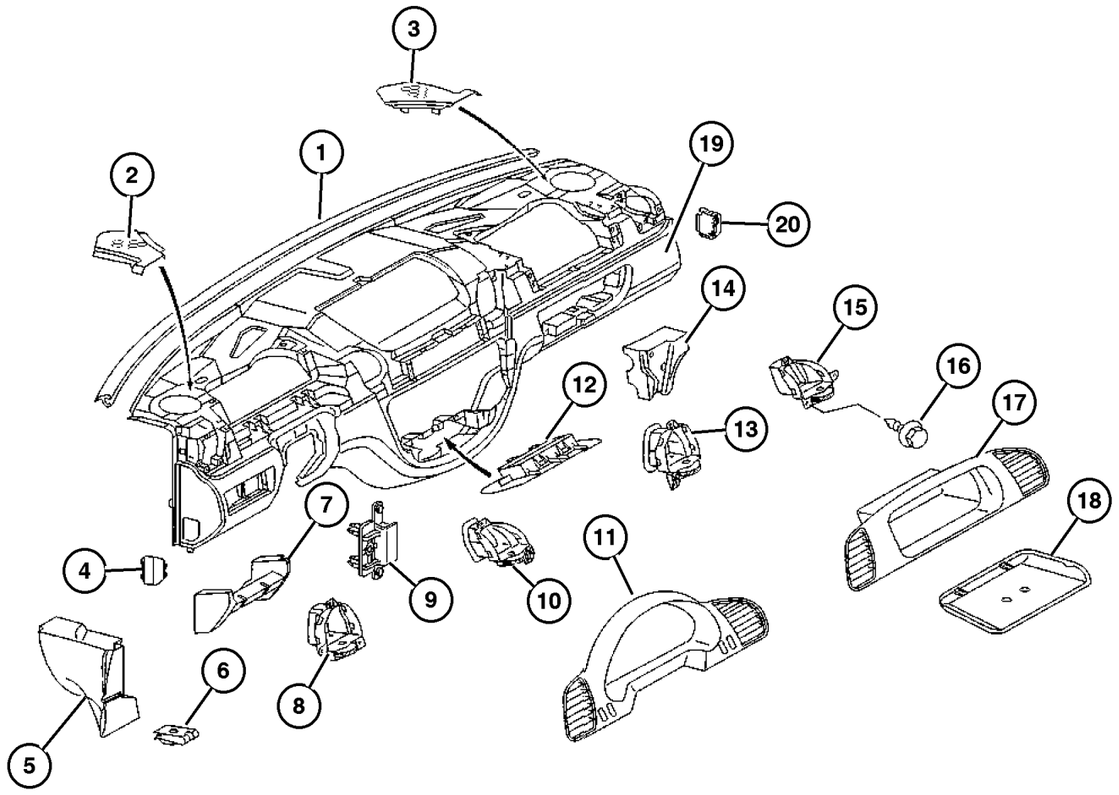

ITEM	PART NUMBER	QTY	LINE	SERIES	BODY	ENGINE	TRANS	TRIM	DESCRIPTION
	6104 610AA	2	2, 6	L	01, 02, 06	EX8	DGZ		
		2	2, 6	L	11, 12, 14, 15, 16	EX8	DGZ		
		2	2, 6	L	51, 52, 54, 55, 56	EX8	DGZ		
		2	3, 7	L	02, 06	EX8	DGZ		
		2	3, 7	L	12, 15, 16	EX8	DGZ		
17									DOOR, Passenger Air Bag
	5104 261AA	1	2, 6	L	01, 02, 06	EX8	DGZ		
		1	2, 6	L	11, 12, 14, 15, 16	EX8	DGZ		
		1	2, 6	L	51, 52, 54, 55, 56	EX8	DGZ		
		1	3, 7	L	02, 06	EX8	DGZ		
		1	3, 7	L	12, 15, 16	EX8	DGZ		
18									TRAY, Instrument Panel
	5122 952AA	1	2, 6	L	01, 02, 06	EX8	DGZ		
		1	2, 6	L	11, 12, 14, 15, 16	EX8	DGZ		
		1	2, 6	L	51, 52, 54, 55, 56	EX8	DGZ		
		1	3, 7	L	02, 06	EX8	DGZ		
		1	3, 7	L	12, 15, 16	EX8	DGZ		
19									PANEL, Instrument
	5122 362AA	1	2, 6	L	01, 02, 06	EX8	DGZ		
		1	2, 6	L	11, 12, 14, 15, 16	EX8	DGZ		
		1	2, 6	L	51, 52, 54, 55, 56	EX8	DGZ		
		1	3, 7	L	02, 06	EX8	DGZ		

Refer to Model Legend Information Bookmark

AR = Use as required - = Non illustrated part # = New this model year

March 3, 2006

Instrument Panel
Figure 08A-105

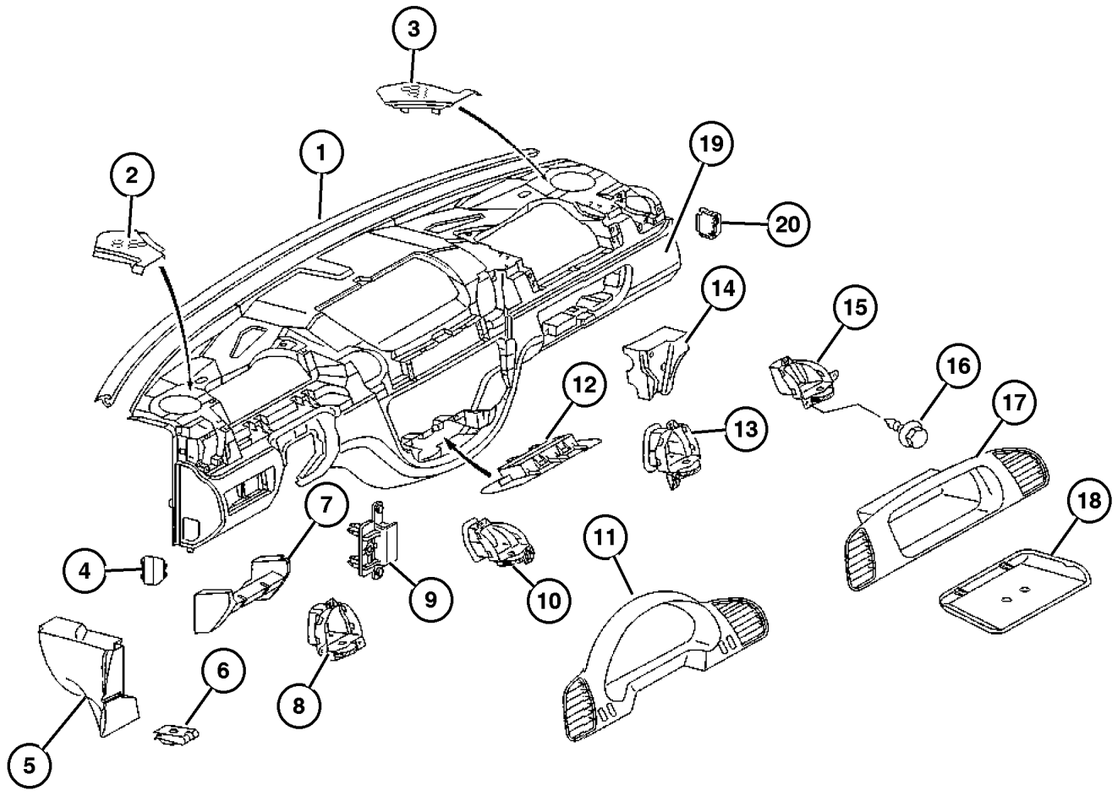

ITEM	PART NUMBER	QTY	LINE	SERIES	BODY	ENGINE	TRANS	TRIM	DESCRIPTION
		1	3, 7	L	12, 15, 16	EX8	DGZ		
20	5103 919AA	2	2, 6	L	01, 02, 06	EX8	DGZ		PLUG, Instrument Panel
		2	2, 6	L	11, 12, 14, 15, 16	EX8	DGZ		
		2	2, 6	L	51, 52, 54, 55, 56	EX8	DGZ		
		2	3, 7	L	02, 06	EX8	DGZ		
		2	3, 7	L	12, 15, 16	EX8	DGZ		

Refer to Model Legend Information Bookmark

Instrument Panel Bezel and Related Parts
Figure 08A-110

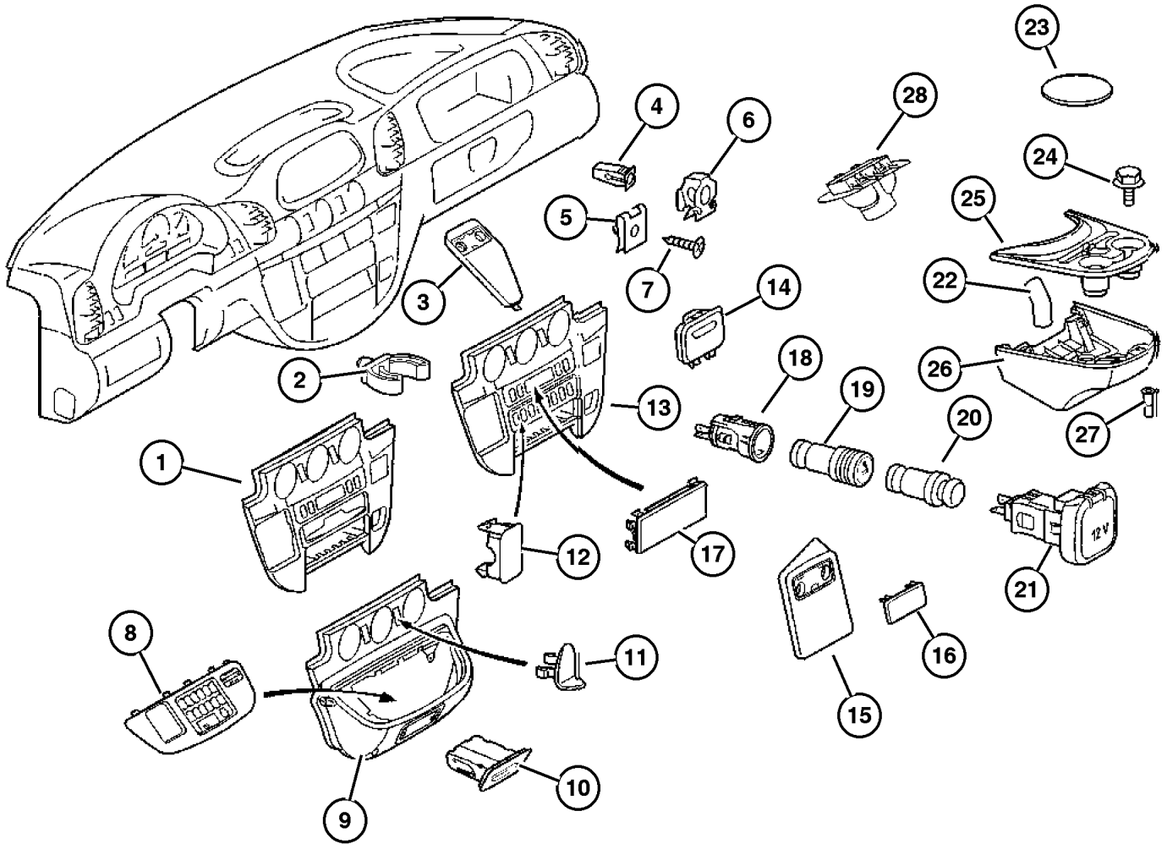

ITEM	PART NUMBER	QTY	LINE	SERIES	BODY	ENGINE	TRANS	TRIM	DESCRIPTION
1									BEZEL, Instrument Panel, Center
	5122 372AA	1	2, 6	L	01, 02, 06		DGZ		
		1	2, 6	L	11, 12, 14, 15, 16		DGZ		
		1	2, 6	L	51, 52, 54, 55, 56		DGZ		
		1	3, 7	L	02, 06		DGZ		
		1	3, 7	L	12, 15, 16		DGZ		
2									CLIP, U Type
	5125 582AA	6	2, 6	L	01, 02, 06	EX8	DGZ		Paneling to Right B Pillar
		6	2, 6	L	11, 12, 14, 15, 16	EX8	DGZ		Paneling to Right B Pillar
		6	2, 6	L	51, 52, 54, 55, 56	EX8	DGZ		Paneling to Right B Pillar
		6	3, 7	L	02, 06	EX8	DGZ		Paneling to Right B Pillar
		6	3, 7	L	12, 15, 16	EX8	DGZ		Paneling to Right B Pillar
3									BRACKET, Instrument Panel
	5122 388AA	1	2, 6	L	01, 02, 06	EX8			
		1	2, 6	L	11, 12, 14, 15, 16	EX8			
		1	2, 6	L	51, 52, 54, 55, 56	EX8			
		1	3, 7	L	02, 06	EX8			
		1	3, 7	L	12, 15, 16	EX8			
4									NUT, Plastic Snap-in
	5125 576AA	2	2, 6	L	01, 02, 06	EX8	DGZ		
		2	2, 6	L	11, 12, 14, 15, 16	EX8	DGZ		
		2	2, 6	L	51, 52, 54, 55, 56	EX8	DGZ		

Refer to Model Legend Information Bookmark

AR = Use as required - = Non illustrated part # = New this model year

March 3, 2006

« RETURN TO GROUP INDEX

»

Instrument Panel Bezel and Related Parts
Figure 08A-110

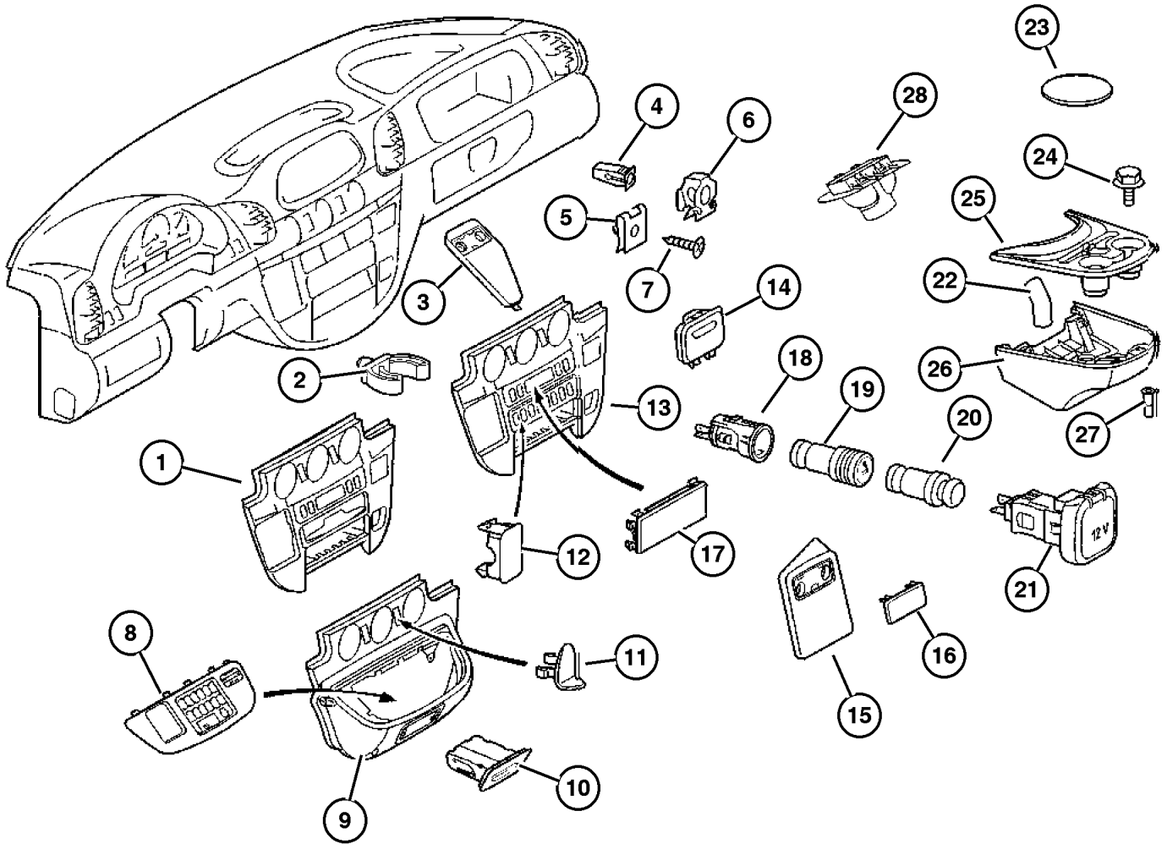

ITEM	PART NUMBER	QTY	LINE	SERIES	BODY	ENGINE	TRANS	TRIM	DESCRIPTION
		2	3, 7	L	02, 06	EX8	DGZ		
		2	3, 7	L	12, 15, 16	EX8	DGZ		
5									NUT, Clip-On
	5125 857AA	2	2, 6	L	01, 02, 06	EX8	DGZ		
		2	2, 6	L	11, 12, 14, 15, 16	EX8	DGZ		
		2	2, 6	L	51, 52, 54, 55, 56	EX8	DGZ		
		2	3, 7	L	02, 06	EX8	DGZ		
		2	3, 7	L	12, 15, 16	EX8	DGZ		
6									NUT, Spring
	5125 861AA	2	2, 6	L	01, 02, 06	EX8	DGZ		
		2	2, 6	L	11, 12, 14, 15, 16	EX8	DGZ		
		2	2, 6	L	51, 52, 54, 55, 56	EX8	DGZ		
		2	3, 7	L	02, 06	EX8	DGZ		
		2	3, 7	L	12, 15, 16	EX8	DGZ		
7									SCREW
	6104 610AA	5	2, 6	L	01, 02, 06	EX8	DGZ		
		5	2, 6	L	11, 12, 14, 15, 16	EX8	DGZ		
		5	2, 6	L	51, 52, 54, 55, 56	EX8	DGZ		
		5	3, 7	L	02, 06	EX8	DGZ		
		5	3, 7	L	12, 15, 16	EX8	DGZ		
8									BEZEL, Center Console
	5122 928AA	1	2, 6	L	01, 02, 06	EX8	DGZ		
		1	2, 6	L	11, 12, 14, 15, 16	EX8	DGZ		

Refer to Model Legend Information Bookmark

Instrument Panel Bezel and Related Parts
Figure 08A-110

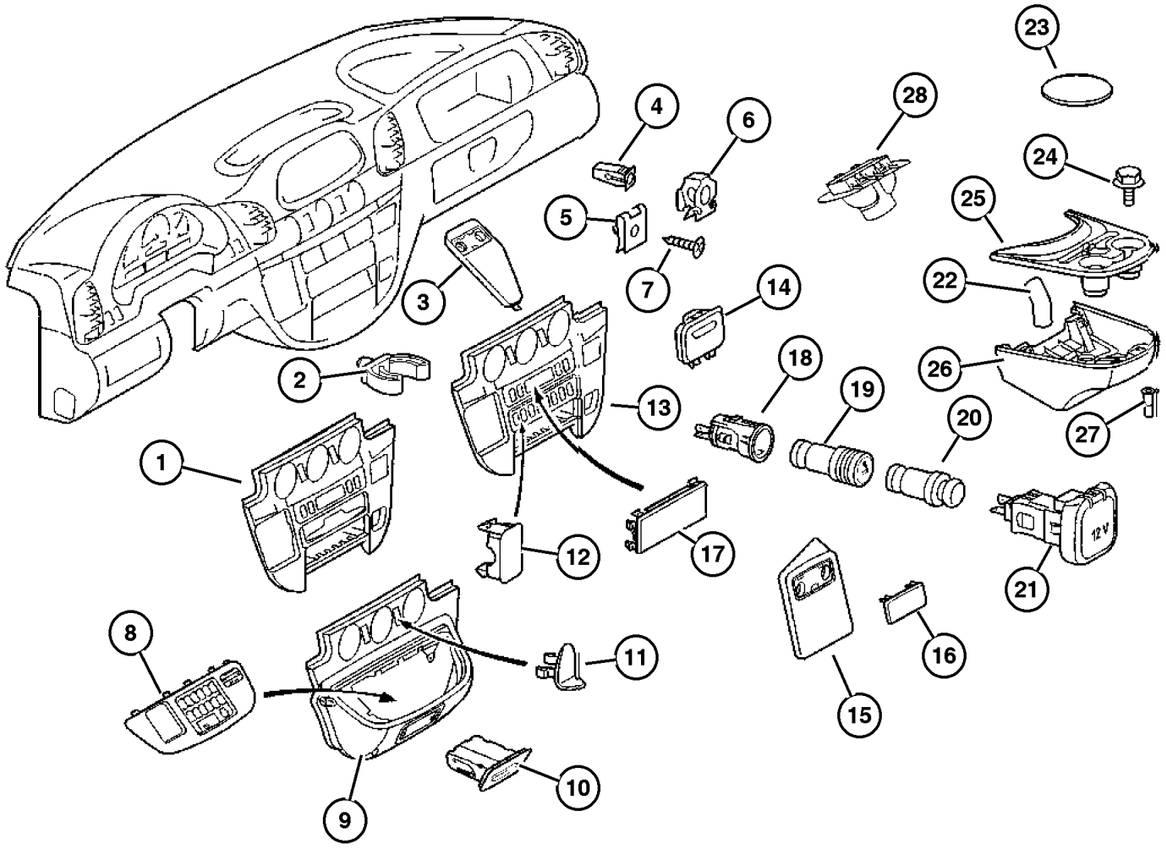

ITEM	PART NUMBER	QTY	LINE	SERIES	BODY	ENGINE	TRANS	TRIM	DESCRIPTION
		1	2, 6	L	51, 52, 54, 55, 56	EX8	DGZ		
		1	3, 7	L	02, 06	EX8	DGZ		
		1	3, 7	L	12, 15, 16	EX8	DGZ		
9	5122 880AA	1	2, 6	L	01, 02, 06	EX8	DGZ		CONSOLE, Instrument Panel
		1	2, 6	L	11, 12, 14, 15, 16	EX8	DGZ		
		1	2, 6	L	51, 52, 54, 55, 56	EX8	DGZ		
		1	3, 7	L	02, 06	EX8	DGZ		
		1	3, 7	L	12, 15, 16	EX8	DGZ		
10	5124 226AA	1	2, 6	L	01, 02, 06	EX8	DGZ		ASH RECEIVER, Instrument Panel
		1	2, 6	L	11, 12, 14, 15, 16	EX8	DGZ		
		1	2, 6	L	51, 52, 54, 55, 56	EX8	DGZ		
		1	3, 7	L	02, 06	EX8	DGZ		
		1	3, 7	L	12, 15, 16	EX8	DGZ		
11	5122 885AA	1	2, 6	L	01, 02, 06	EX8	DGZ		COVER, Center Console
		1	2, 6	L	11, 12, 14, 15, 16	EX8	DGZ		
		1	2, 6	L	51, 52, 54, 55, 56	EX8	DGZ		
		1	3, 7	L	02, 06	EX8	DGZ		
		1	3, 7	L	12, 15, 16	EX8	DGZ		
12	5122 925AA	3	2, 6	L	01, 02, 06	EX8	DGZ		COVER, Switch Opening

Refer to Model Legend Information Bookmark

AR = Use as required - = Non illustrated part # = New this model year

March 3, 2006

Instrument Panel Bezel and Related Parts
Figure 08A-110

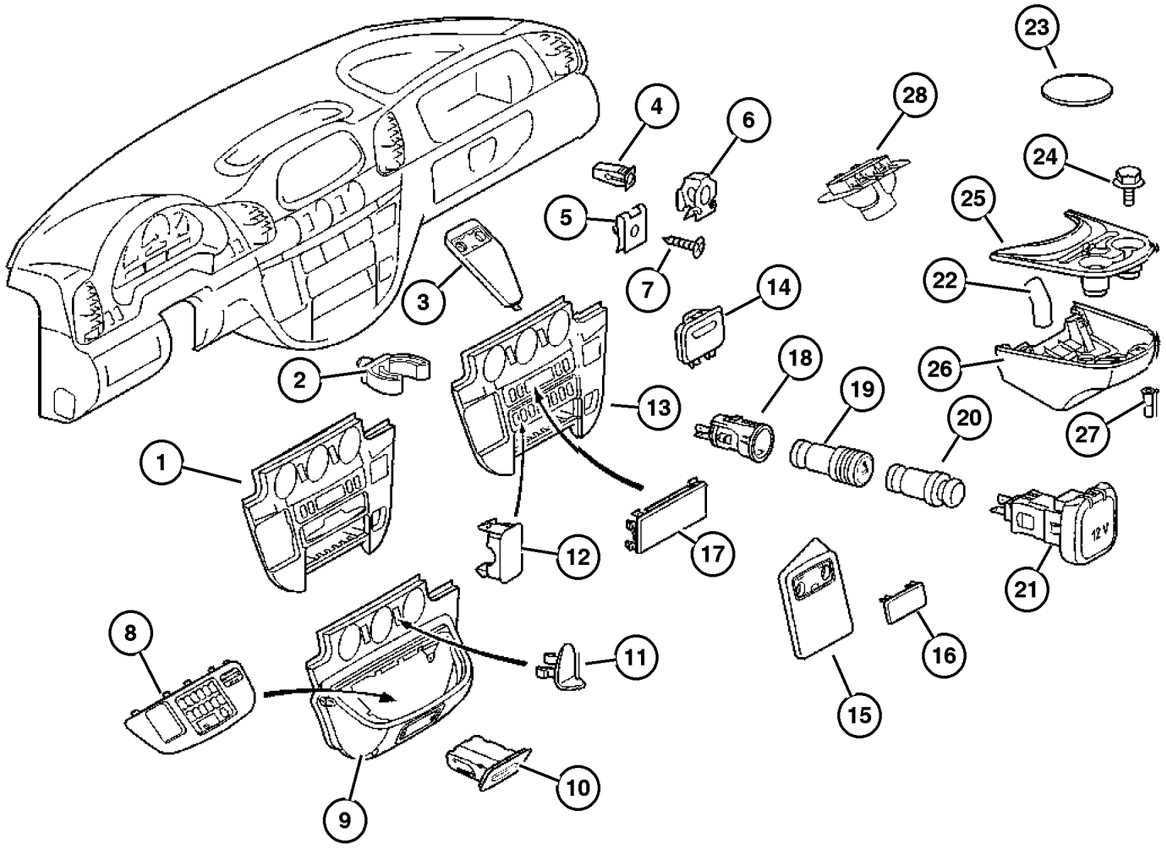

ITEM	PART NUMBER	QTY	LINE	SERIES	BODY	ENGINE	TRANS	TRIM	DESCRIPTION
		3	2, 6	L	11, 12, 14, 15, 16	EX8	DGZ		
		3	2, 6	L	51, 52, 54, 55, 56	EX8	DGZ		
		3	3, 7	L	02, 06	EX8	DGZ		
		3	3, 7	L	12, 15, 16	EX8	DGZ		
13									BEZEL, Instrument Panel, Center
	5122 873AA	1	2, 6	L	01, 02, 06		DGZ		
		1	2, 6	L	11, 12, 14, 15, 16		DGZ		
		1	2, 6	L	51, 52, 54, 55, 56		DGZ		
		1	3, 7	L	02, 06		DGZ		
		1	3, 7	L	12, 15, 16		DGZ		
14									COVER, Instrument Panel
	5122 391AA	1	2, 6	L	01, 02, 06	EX8	DGZ		Paper clip
		1	2, 6	L	11, 12, 14, 15, 16	EX8	DGZ		Paper clip
		1	2, 6	L	51, 52, 54, 55, 56	EX8	DGZ		Paper clip
		1	3, 7	L	02, 06	EX8	DGZ		Paper clip
		1	3, 7	L	12, 15, 16	EX8	DGZ		Paper clip
15									BEZEL, Instrument Panel
	5122 939AA	1	2, 6	L	01, 02, 06	EX8	DGZ		
		1	2, 6	L	11, 12, 14, 15, 16	EX8	DGZ		
		1	2, 6	L	51, 52, 54, 55, 56	EX8	DGZ		
		1	3, 7	L	02, 06	EX8	DGZ		
		1	3, 7	L	12, 15, 16	EX8	DGZ		
16									COVER, Instrument Panel

Refer to Model Legend Information Bookmark

AR = Use as required - = Non illustrated part # = New this model year

March 3, 2006

« RETURN TO GROUP INDEX

Instrument Panel Bezel and Related Parts
Figure 08A-110

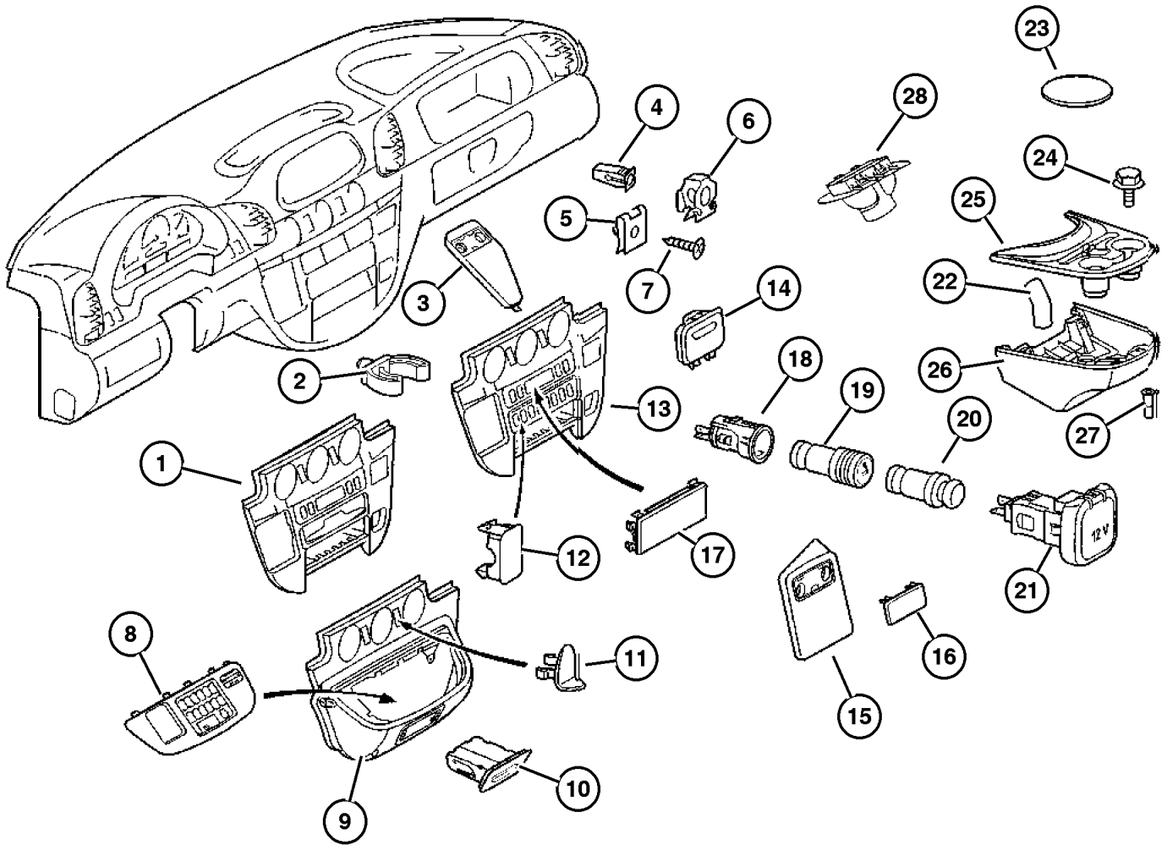

ITEM	PART NUMBER	QTY	LINE	SERIES	BODY	ENGINE	TRANS	TRIM	DESCRIPTION
	5122 878AA	1	2, 6	L	01, 02, 06	EX8	DGZ		
		1	2, 6	L	11, 12, 14, 15, 16	EX8	DGZ		
		1	2, 6	L	51, 52, 54, 55, 56	EX8	DGZ		
		1	3, 7	L	02, 06	EX8	DGZ		
		1	3, 7	L	12, 15, 16	EX8	DGZ		
17									COVER, Radio Opening
	5103 928AA	1	2, 6	L	01, 02, 06	EX8	DGZ		
		1	2, 6	L	11, 12, 14, 15, 16	EX8	DGZ		
		1	2, 6	L	51, 52, 54, 55, 56	EX8	DGZ		
		1	3, 7	L	02, 06	EX8	DGZ		
		1	3, 7	L	12, 15, 16	EX8	DGZ		
18									BASE, Cigar Lighter
	5124 456AA	1	2, 6	L	01, 02, 06	EX8	DGZ		
		1	2, 6	L	11, 12, 14, 15, 16	EX8	DGZ		
		1	2, 6	L	51, 52, 54, 55, 56	EX8	DGZ		
		1	3, 7	L	02, 06	EX8	DGZ		
		1	3, 7	L	12, 15, 16	EX8	DGZ		
19									ELEMENT, Cigar Lighter
	5103 679AA	1	2, 6	L	01, 02, 06	EX8	DGZ		
		1	2, 6	L	11, 12, 14, 15, 16	EX8	DGZ		
		1	2, 6	L	51, 52, 54, 55, 56	EX8	DGZ		
		1	3, 7	L	02, 06	EX8	DGZ		

Refer to Model Legend Information Bookmark

AR = Use as required - = Non illustrated part # = New this model year

March 3, 2006

« RETURN TO GROUP INDEX

Instrument Panel Bezel and Related Parts
Figure 08A-110

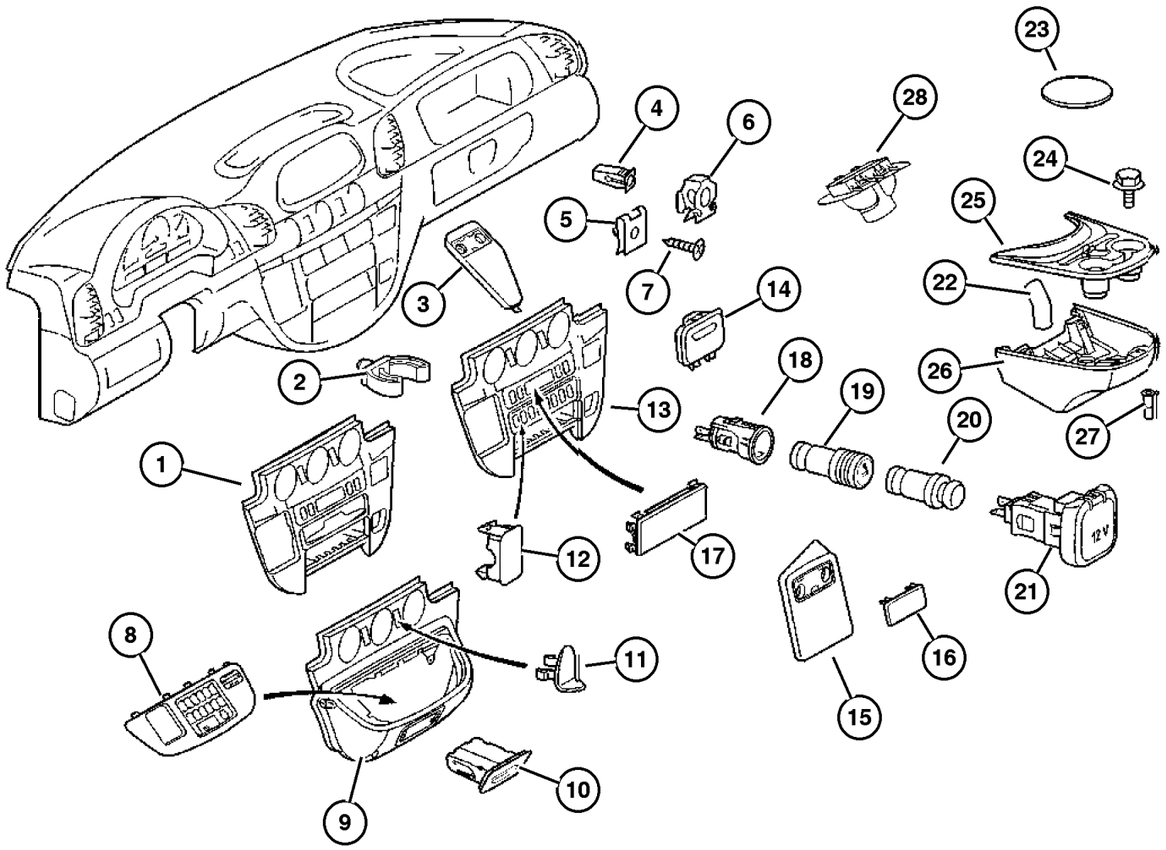

ITEM	PART NUMBER	QTY	LINE	SERIES	BODY	ENGINE	TRANS	TRIM	DESCRIPTION
		1	3, 7	L	12, 15, 16	EX8	DGZ		
20									SOCKET, Accessory
	5124 598AA	1	2, 6	L	01, 02, 06	EX8	DGZ		
		1	2, 6	L	11, 12, 14, 15, 16	EX8	DGZ		
		1	2, 6	L	51, 52, 54, 55, 56	EX8	DGZ		
		1	3, 7	L	02, 06	EX8	DGZ		
		1	3, 7	L	12, 15, 16	EX8	DGZ		
21									POWER OUTLET
	5124 458AA	1	2, 6	L	01, 02, 06	EX8	DGZ		
		1	2, 6	L	11, 12, 14, 15, 16	EX8	DGZ		
		1	2, 6	L	51, 52, 54, 55, 56	EX8	DGZ		
		1	3, 7	L	02, 06	EX8	DGZ		
		1	3, 7	L	12, 15, 16	EX8	DGZ		
	5183 902AA	1	2, 6	L	11, 12, 14, 15, 16	EX8	DGZ	[XAH]	
22									HOSE
	5104 488AA	1	2, 6	L	01, 02, 06	EX8	DGZ		Air Duct Adapter
		1	2, 6	L	11, 12, 14, 15, 16	EX8	DGZ		Air Duct Adapter
		1	2, 6	L	51, 52, 54, 55, 56	EX8	DGZ		Air Duct Adapter
		1	3, 7	L	02, 06	EX8	DGZ		Air Duct Adapter
		1	3, 7	L	12, 15, 16	EX8	DGZ		Air Duct Adapter
23									MAT, Single Cup
	5122 953AA	2	2, 6	L	01, 02, 06	EX8	DGZ		

Refer to Model Legend Information Bookmark

Instrument Panel Bezel and Related Parts
Figure 08A-110

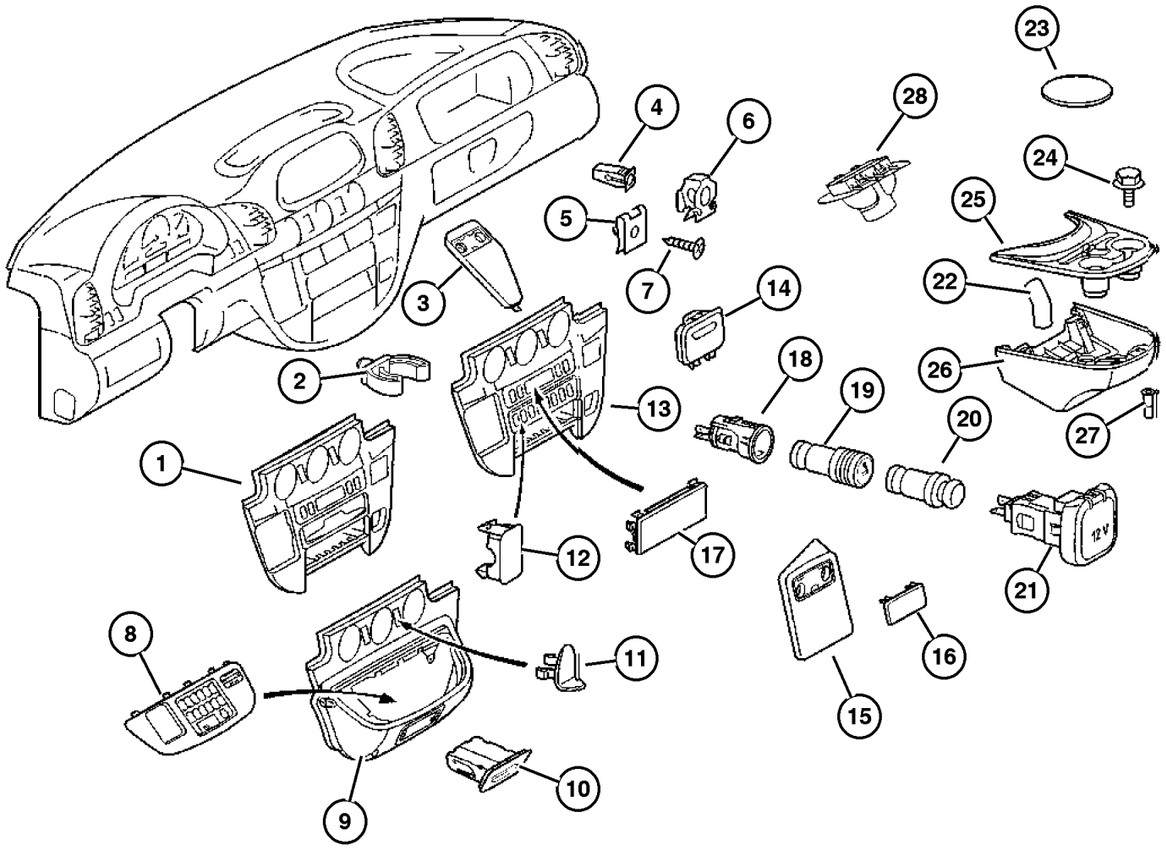

ITEM	PART NUMBER	QTY	LINE	SERIES	BODY	ENGINE	TRANS	TRIM	DESCRIPTION
		2	2, 6	L	11, 12, 14, 15, 16	EX8	DGZ		
		2	2, 6	L	51, 52, 54, 55, 56	EX8	DGZ		
		2	3, 7	L	02, 06	EX8	DGZ		
		2	3, 7	L	12, 15, 16	EX8	DGZ		
24									SCREW, Hex Flange Head
	6104 121AA	4	2, 6	L	01, 02, 06	EX8	DGZ		
		4	2, 6	L	11, 12, 14, 15, 16	EX8	DGZ		
		4	2, 6	L	51, 52, 54, 55, 56	EX8	DGZ		
		4	3, 7	L	02, 06	EX8	DGZ		
		4	3, 7	L	12, 15, 16	EX8	DGZ		
25									CUP HOLDER, Lid
	5104 254AA	1	2, 6	L	01, 02, 06	EX8	DGZ		
		1	2, 6	L	11, 12, 14, 15, 16	EX8	DGZ		
		1	2, 6	L	51, 52, 54, 55, 56	EX8	DGZ		
		1	3, 7	L	02, 06	EX8	DGZ		
		1	3, 7	L	12, 15, 16	EX8	DGZ		
26									HOUSING, Cup Holder
	5104 255AA	1	2, 6	L	01, 02, 06	EX8	DGZ		
		1	2, 6	L	11, 12, 14, 15, 16	EX8	DGZ		
		1	2, 6	L	51, 52, 54, 55, 56	EX8	DGZ		
		1	3, 7	L	02, 06	EX8	DGZ		
		1	3, 7	L	12, 15, 16	EX8	DGZ		
27									NUT, Rivet

Refer to Model Legend Information Bookmark

Instrument Panel Bezel and Related Parts
Figure 08A-110

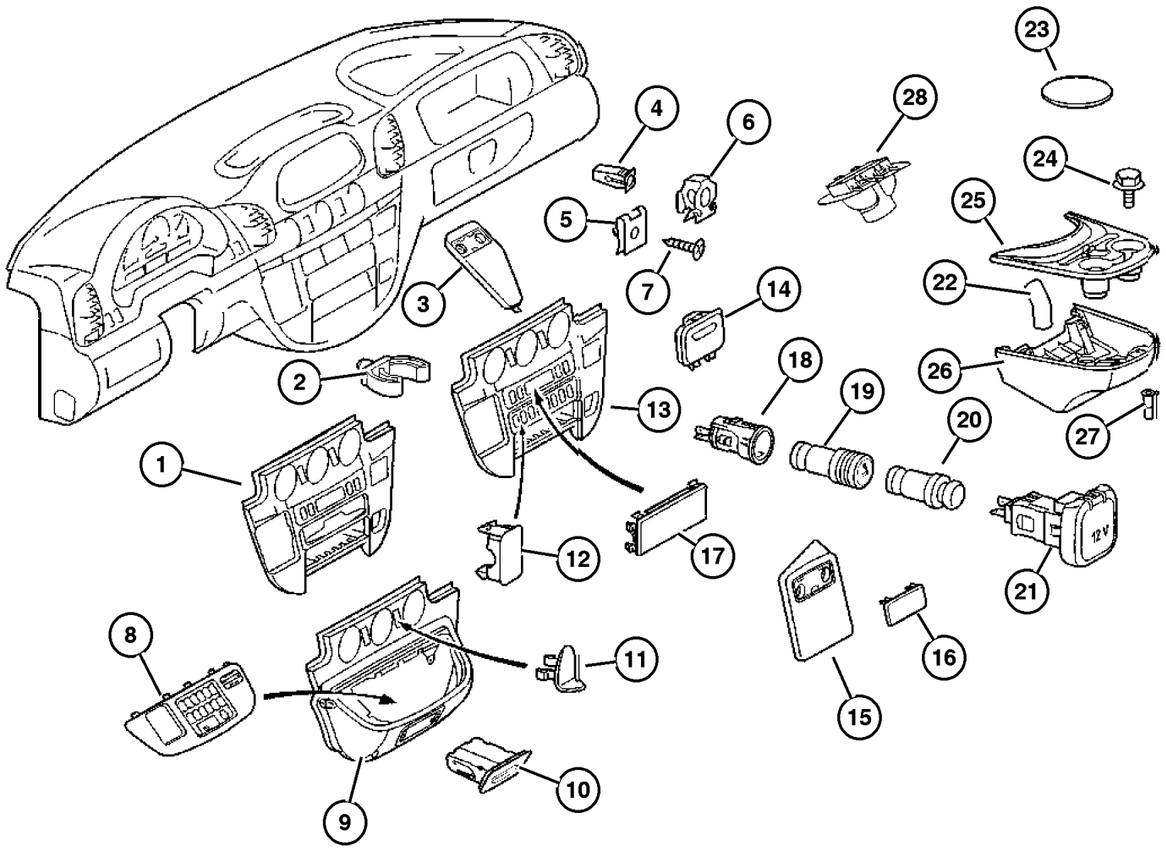

ITEM	PART NUMBER	QTY	LINE	SERIES	BODY	ENGINE	TRANS	TRIM	DESCRIPTION
	5133 975AA	4	2, 6	L	01, 02, 06	EX8	DGZ		
		4	2, 6	L	11, 12, 14, 15, 16	EX8	DGZ		
		4	2, 6	L	51, 52, 54, 55, 56	EX8	DGZ		
		4	3, 7	L	02, 06	EX8	DGZ		
		4	3, 7	L	12, 15, 16	EX8	DGZ		
28									ADAPTER, Air Duct
	5104 267AA	1	2, 6	L	01, 02, 06	EX8	DGZ		
		1	2, 6	L	11, 12, 14, 15, 16	EX8	DGZ		
		1	2, 6	L	51, 52, 54, 55, 56	EX8	DGZ		
		1	3, 7	L	02, 06	EX8	DGZ		
		1	3, 7	L	12, 15, 16	EX8	DGZ		

Refer to Model Legend Information Bookmark

Ash Reciever and Glove Box
Figure 08A-115

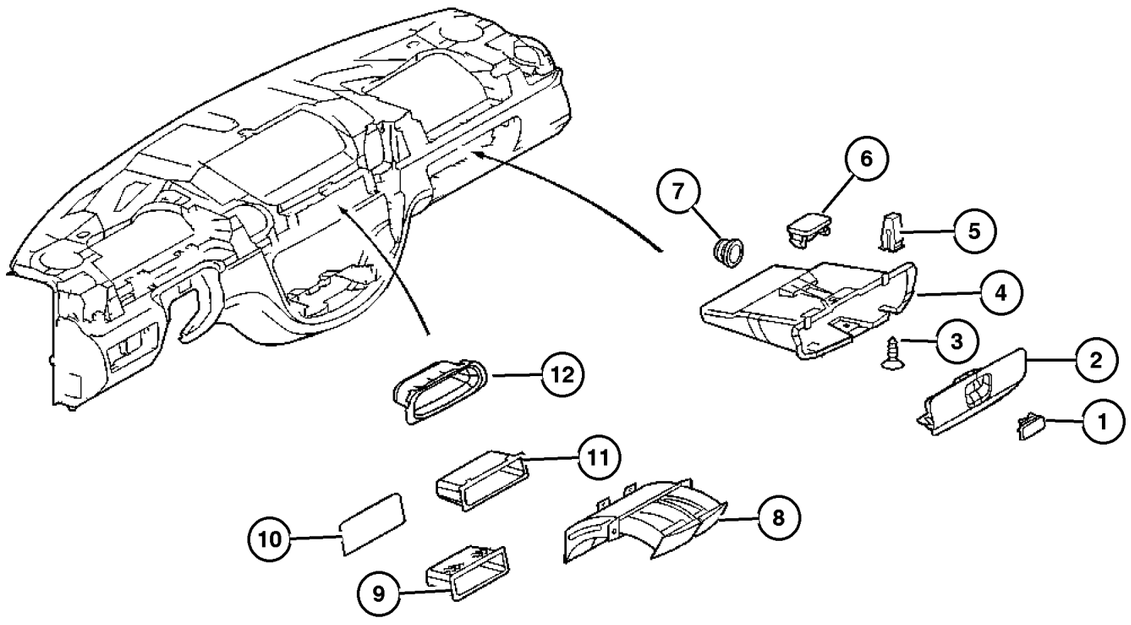

ITEM	PART NUMBER	QTY	LINE	SERIES	BODY	ENGINE	TRANS	TRIM	DESCRIPTION
1									LATCH, Glovebox
	5104 257AA	1	2, 6	L	01, 02, 06	EX8	DGZ		
		1	2, 6	L	11, 12, 14, 15, 16	EX8	DGZ		
		1	2, 6	L	51, 52, 54, 55, 56	EX8	DGZ		
		1	3, 7	L	02, 06	EX8	DGZ		
		1	3, 7	L	12, 15, 16	EX8	DGZ		
2									DOOR, Glove Box
	5104 260AA	1	2, 6	L	01, 02, 06	EX8	DGZ		
		1	2, 6	L	11, 12, 14, 15, 16	EX8	DGZ		
		1	2, 6	L	51, 52, 54, 55, 56	EX8	DGZ		
		1	3, 7	L	02, 06	EX8	DGZ		
		1	3, 7	L	12, 15, 16	EX8	DGZ		
3									SCREW
	6104 610AA	5	2, 6	L	01, 02, 06	EX8	DGZ		
		5	2, 6	L	11, 12, 14, 15, 16	EX8	DGZ		
		5	2, 6	L	51, 52, 54, 55, 56	EX8	DGZ		
		5	3, 7	L	02, 06	EX8	DGZ		
		5	3, 7	L	12, 15, 16	EX8	DGZ		
4									GLOVE BOX, Instrument Panel
	5122 413AA	1	2, 6	L	01, 02, 06	EX8	DGZ		
		1	2, 6	L	11, 12, 14, 15, 16	EX8	DGZ		
		1	2, 6	L	51, 52, 54, 55, 56	EX8	DGZ		

Refer to Model Legend Information Bookmark

Ash Reciever and Glove Box
Figure 08A-115

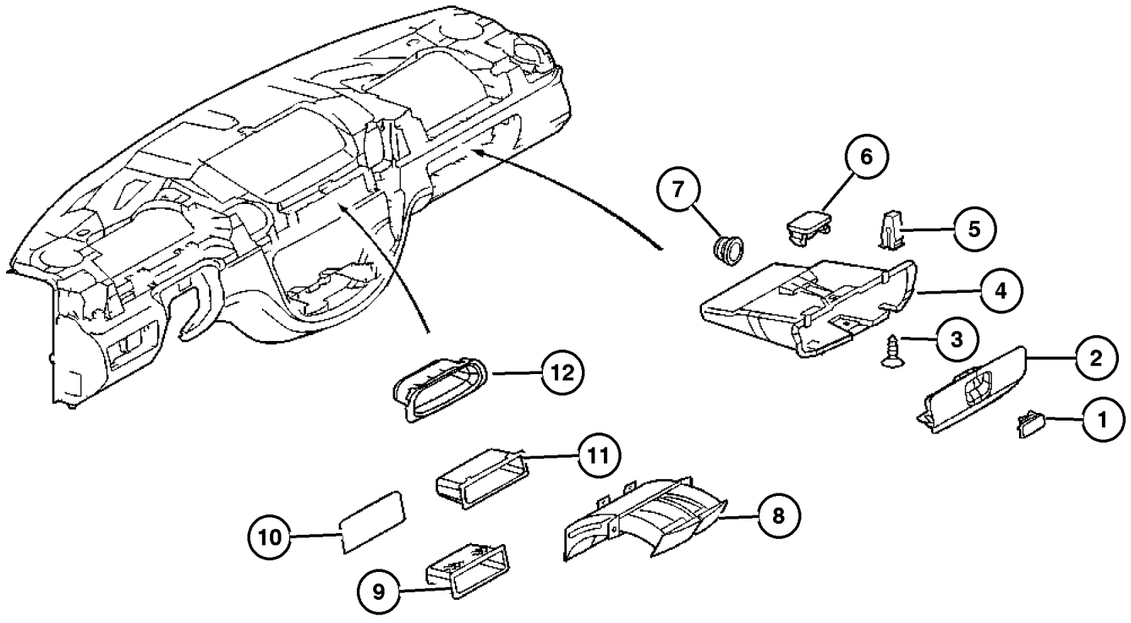

ITEM	PART NUMBER	QTY	LINE	SERIES	BODY	ENGINE	TRANS	TRIM	DESCRIPTION
		1	3, 7	L	02, 06	EX8	DGZ		
		1	3, 7	L	12, 15, 16	EX8	DGZ		
5									NUT, Plastic Snap-in
	5125 576AA	2	2, 6	L	01, 02, 06	EX8	DGZ		
		2	2, 6	L	11, 12, 14, 15, 16	EX8	DGZ		
		2	2, 6	L	51, 52, 54, 55, 56	EX8	DGZ		
		2	3, 7	L	02, 06	EX8	DGZ		
		2	3, 7	L	12, 15, 16	EX8	DGZ		
6									PLUG
	5125 551AA	2	2, 6	L	01, 02, 06	EX8	DGZ		
		2	2, 6	L	11, 12, 14, 15, 16	EX8	DGZ		
		2	2, 6	L	51, 52, 54, 55, 56	EX8	DGZ		
		2	3, 7	L	02, 06	EX8	DGZ		
		2	3, 7	L	12, 15, 16	EX8	DGZ		
7									PLUG, Instrument Panel
	5103 919AA	2	2, 6	L	01, 02, 06	EX8	DGZ		
		2	2, 6	L	11, 12, 14, 15, 16	EX8	DGZ		
		2	2, 6	L	51, 52, 54, 55, 56	EX8	DGZ		
		2	3, 7	L	02, 06	EX8	DGZ		
		2	3, 7	L	12, 15, 16	EX8	DGZ		
8									ASH RECEIVER, Instrument Panel
	5124 226AA	1	2, 6	L	01, 02, 06	EX8	DGZ		
		1	2, 6	L	11, 12, 14, 15, 16	EX8	DGZ		

Refer to Model Legend Information Bookmark

Ash Reciever and Glove Box
Figure 08A-115

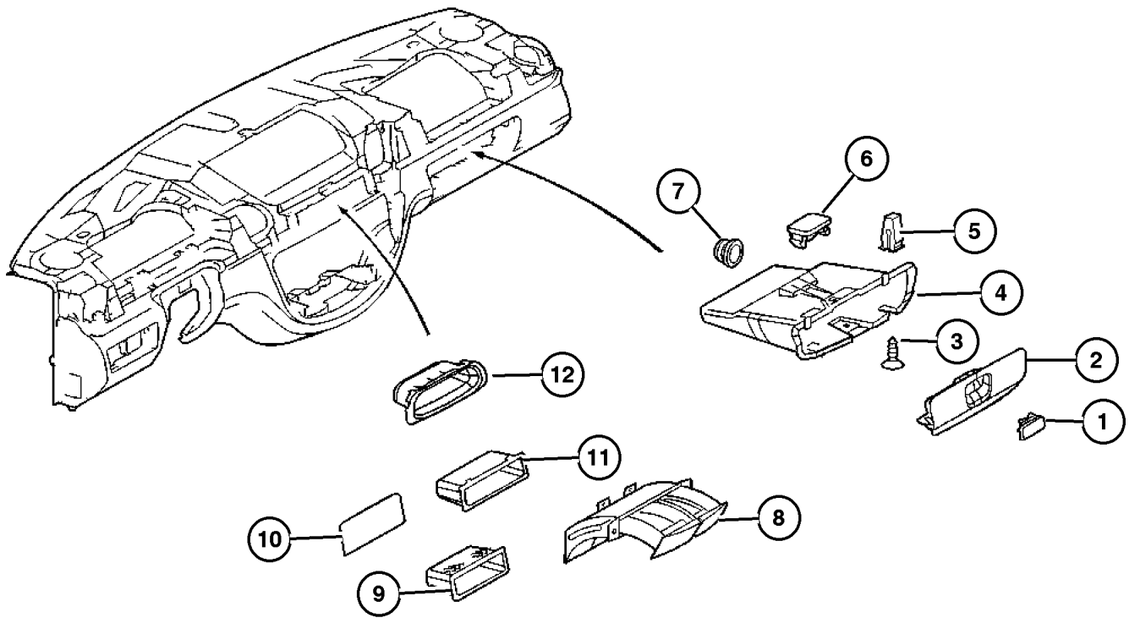

ITEM	PART NUMBER	QTY	LINE	SERIES	BODY	ENGINE	TRANS	TRIM	DESCRIPTION
		1	2, 6	L	51, 52, 54, 55, 56	EX8	DGZ		
		1	3, 7	L	02, 06	EX8	DGZ		
		1	3, 7	L	12, 15, 16	EX8	DGZ		
9	5122 945AA	1	2, 6	L	01, 02, 06	EX8	DGZ		CUBBY BOX, Instrument Panel
		1	2, 6	L	11, 12, 14, 15, 16	EX8	DGZ		
		1	2, 6	L	51, 52, 54, 55, 56	EX8	DGZ		
		1	3, 7	L	02, 06	EX8	DGZ		
		1	3, 7	L	12, 15, 16	EX8	DGZ		
10	5122 951AA	1	2, 6	L	01, 02, 06	EX8	DGZ		PAD, Backing
		1	2, 6	L	11, 12, 14, 15, 16	EX8	DGZ		
		1	2, 6	L	51, 52, 54, 55, 56	EX8	DGZ		
		1	3, 7	L	02, 06	EX8	DGZ		
		1	3, 7	L	12, 15, 16	EX8	DGZ		
11	5122 948AA	1	2, 6	L	01, 02, 06	EX8	DGZ		CUBBY BOX, Instrument Panel
		1	2, 6	L	11, 12, 14, 15, 16	EX8	DGZ		
		1	2, 6	L	51, 52, 54, 55, 56	EX8	DGZ		
		1	3, 7	L	02, 06	EX8	DGZ		
		1	3, 7	L	12, 15, 16	EX8	DGZ		
12	5122 943AA	1	3, 7	L	02, 06	EX8	DGZ		CUBBY BOX, Instrument Panel

Refer to Model Legend Information Bookmark

Ash Reciever and Glove Box
Figure 08A-115

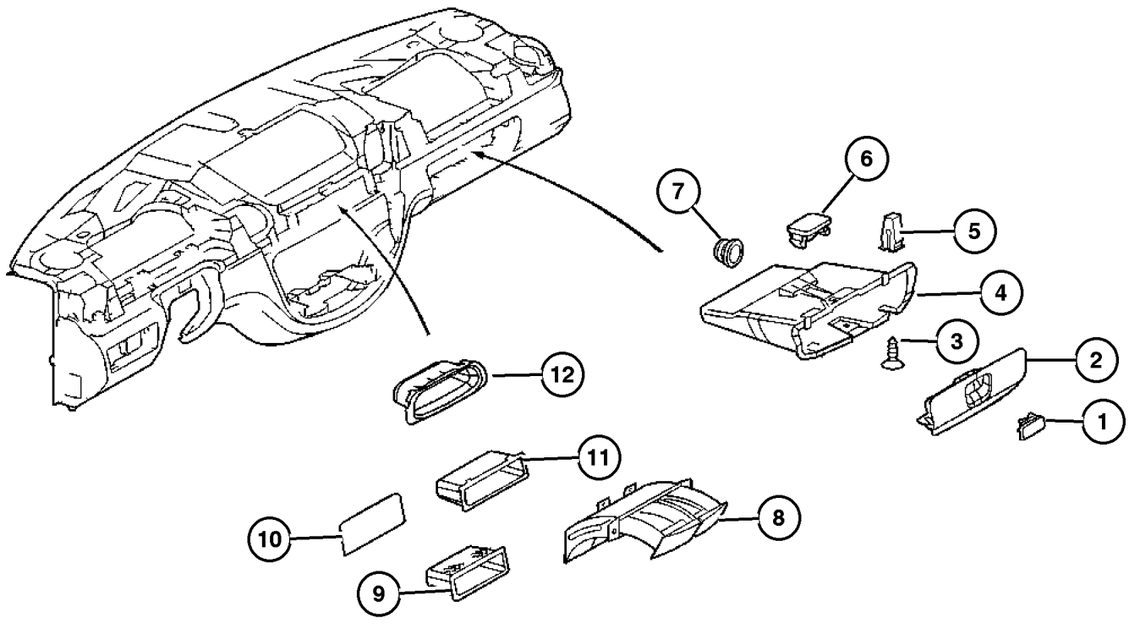

ITEM	PART NUMBER	QTY	LINE	SERIES	BODY	ENGINE	TRANS	TRIM	DESCRIPTION
		1	3, 7	L	12, 15, 16	EX8	DGZ		

Refer to Model Legend Information Bookmark

Instrument Panel Cover and Related Parts
Figure 08A-120

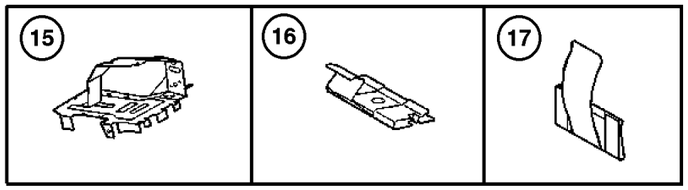

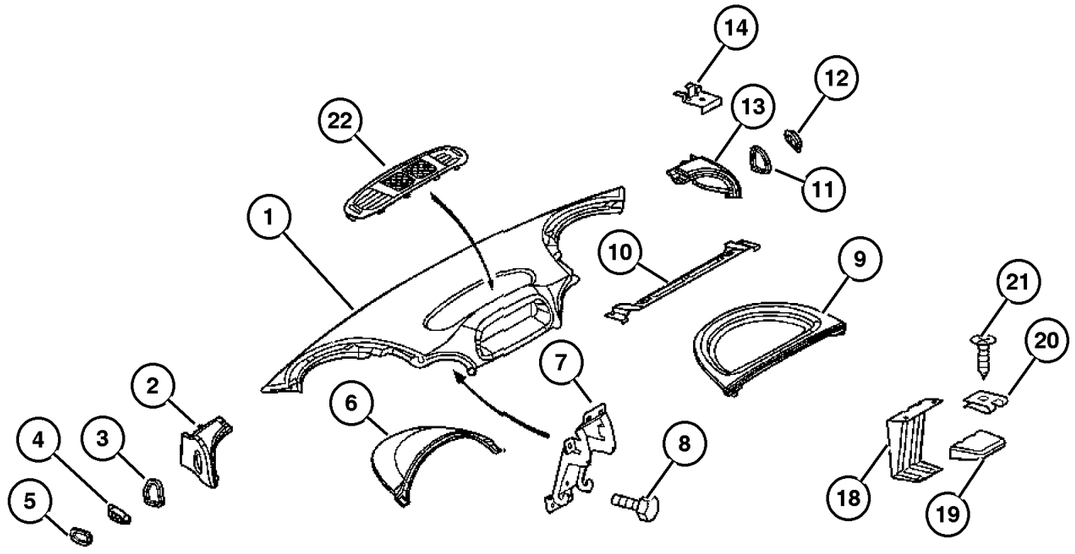

ITEM	PART NUMBER	QTY	LINE	SERIES	BODY	ENGINE	TRANS	TRIM	DESCRIPTION
1									COVER, Instrument Panel
	5122 364AA	1	2, 6	L	01, 02, 06	EX8	DGZ		With Comfort/Soft Look Dash
		1	2, 6	L	11, 12, 14, 15, 16	EX8	DGZ		With Comfort/Soft Look Dash
		1	2, 6	L	51, 52, 54, 55, 56	EX8	DGZ		With Comfort/Soft Look Dash
		1	3, 7	L	02, 06	EX8	DGZ		With Comfort/Soft Look Dash
		1	3, 7	L	12, 15, 16	EX8	DGZ		With Comfort/Soft Look Dash
2									HOUSING, Air Outlet
	5122 876AA	1	2, 6	L	01, 02, 06	EX8	DGZ		Left
		1	2, 6	L	11, 12, 14, 15, 16	EX8	DGZ		Left
		1	3, 7	L	02, 06	EX8	DGZ		Left
		1	3, 7	L	12, 15, 16	EX8	DGZ		Left
3									SEAL
	5124 784AA	1	2, 6	L	01, 02, 06	EX8	DGZ		Left Demister to Instrument Panel
		1	2, 6	L	11, 12, 14, 15, 16	EX8	DGZ		Left Demister to Instrument Panel
		1	2, 6	L	51, 52, 54, 55, 56	EX8	DGZ		Left Demister to Instrument Panel
		1	3, 7	L	02, 06	EX8	DGZ		Left Demister to Instrument Panel
		1	3, 7	L	12, 15, 16	EX8	DGZ		Left Demister to Instrument Panel
4									GRILLE, Demister
	5124 910AA	1	2, 6	L	01, 02, 06	EX8	DGZ		Left
		1	2, 6	L	11, 12, 14, 15, 16	EX8	DGZ		Left
		1	2, 6	L	51, 52, 54, 55, 56	EX8	DGZ		Left
		1	3, 7	L	02, 06	EX8	DGZ		Left
		1	3, 7	L	12, 15, 16	EX8	DGZ		Left
5									SEAL

Refer to Model Legend Information Bookmark

AR = Use as required - = Non illustrated part # = New this model year

March 3, 2006

« RETURN TO GROUP INDEX

»

Instrument Panel Cover and Related Parts
Figure 08A-120

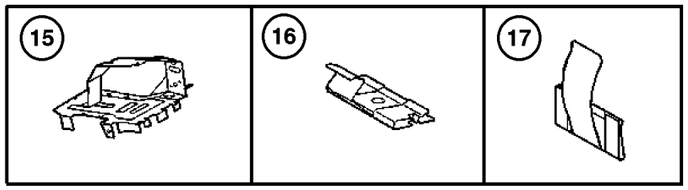

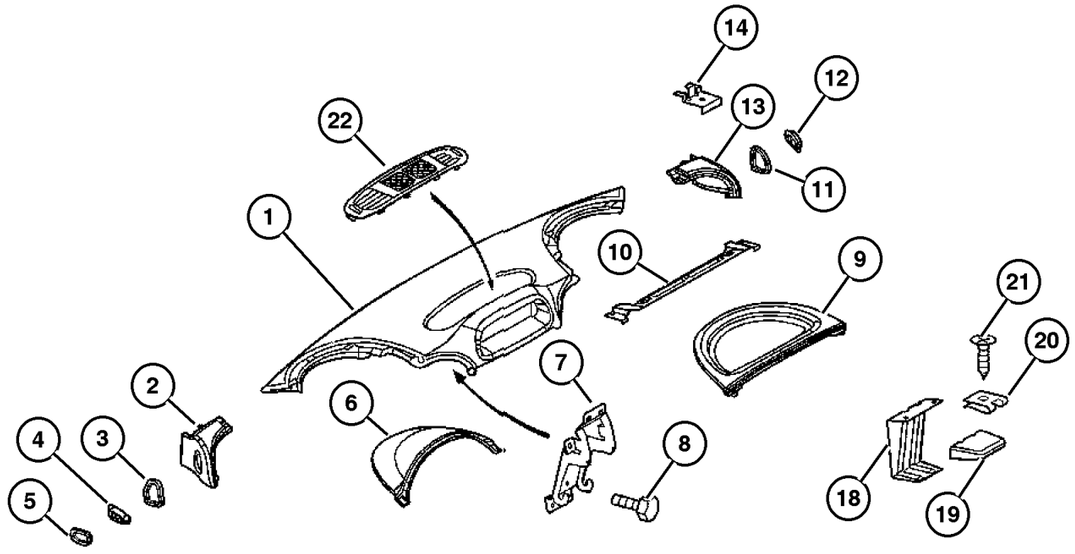

ITEM	PART NUMBER	QTY	LINE	SERIES	BODY	ENGINE	TRANS	TRIM	DESCRIPTION
	5124 781AA	1	2, 6	L	01, 02, 06	EX8	DGZ		
		1	2, 6	L	11, 12, 14, 15, 16	EX8	DGZ		
		1	2, 6	L	51, 52, 54, 55, 56	EX8	DGZ		
		1	3, 7	L	02, 06	EX8	DGZ		
		1	3, 7	L	12, 15, 16	EX8	DGZ		
6									COVER
	5122 369AA	1	2, 6	L	01, 02, 06	EX8	DGZ		Left
		1	2, 6	L	11, 12, 14, 15, 16	EX8	DGZ		Left
		1	2, 6	L	51, 52, 54, 55, 56	EX8	DGZ		Left
		1	3, 7	L	02, 06	EX8	DGZ		Left
		1	3, 7	L	12, 15, 16	EX8	DGZ		Left
7									BRACKET, Instrument Panel
	5122 906AA	1	2, 6	L	01, 02, 06	EX8	DGZ		Struts/KT/Ablage
		1	2, 6	L	11, 12, 14, 15, 16	EX8	DGZ		Struts/KT/Ablage
		1	2, 6	L	51, 52, 54, 55, 56	EX8	DGZ		Struts/KT/Ablage
		1	3, 7	L	02, 06	EX8	DGZ		Struts/KT/Ablage
		1	3, 7	L	12, 15, 16	EX8	DGZ		Struts/KT/Ablage
8									SCREW
	5104 663AA	4	2, 6	L	01, 02, 06	EX8	DGZ		
		4	2, 6	L	11, 12, 14, 15, 16	EX8	DGZ		
		4	2, 6	L	51, 52, 54, 55, 56	EX8	DGZ		
		4	3, 7	L	02, 06	EX8	DGZ		

Refer to Model Legend Information Bookmark

AR = Use as required - = Non illustrated part # = New this model year

March 3, 2006

« RETURN TO GROUP INDEX

Instrument Panel Cover and Related Parts
Figure 08A-120

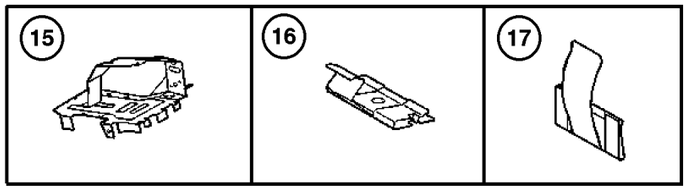

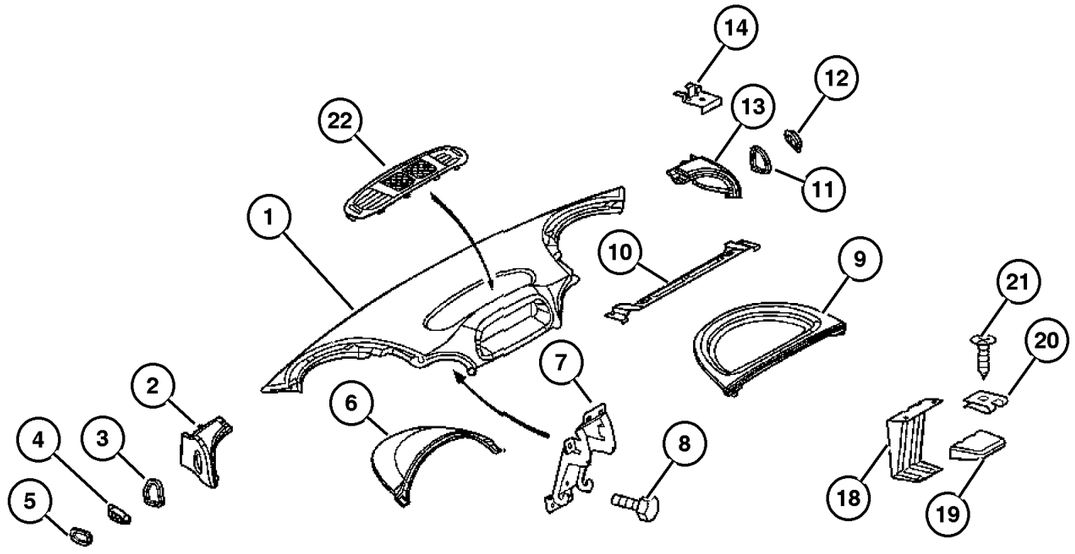

ITEM	PART NUMBER	QTY	LINE	SERIES	BODY	ENGINE	TRANS	TRIM	DESCRIPTION
		4	3, 7	L	12, 15, 16	EX8	DGZ		
9	5104 268AA	1	2, 6	L	01, 02, 06	EX8	DGZ		BEZEL, Instrument Panel Pigeon Hole Top, Right
		1	2, 6	L	11, 12, 14, 15, 16	EX8	DGZ		Pigeon Hole Top, Right
		1	2, 6	L	51, 52, 54, 55, 56	EX8	DGZ		Pigeon Hole Top, Right
		1	3, 7	L	02, 06	EX8	DGZ		Pigeon Hole Top, Right
		1	3, 7	L	12, 15, 16	EX8	DGZ		Pigeon Hole Top, Right
10	5122 390AA	1	2, 6	L	01, 02, 06	EX8	DGZ		BRACKET, Instrument Panel
		1	2, 6	L	11, 12, 14, 15, 16	EX8	DGZ		
		1	2, 6	L	51, 52, 54, 55, 56	EX8	DGZ		
		1	3, 7	L	02, 06	EX8	DGZ		
		1	3, 7	L	12, 15, 16	EX8	DGZ		
11	5124 784AA	1	2, 6	L	01, 02, 06	EX8	DGZ		SEAL Demister to Instrument Panel, Right
		1	2, 6	L	11, 12, 14, 15, 16	EX8	DGZ		Demister to Instrument Panel, Right
		1	2, 6	L	51, 52, 54, 55, 56	EX8	DGZ		Demister to Instrument Panel, Right
		1	3, 7	L	02, 06	EX8	DGZ		Demister to Instrument Panel, Right
		1	3, 7	L	12, 15, 16	EX8	DGZ		Demister to Instrument Panel, Right
12	5124 911AA	1	2, 6	L	01, 02, 06	EX8	DGZ		GRILLE, Demister Right
		1	2, 6	L	11, 12, 14, 15, 16	EX8	DGZ		Right

Refer to Model Legend Information Bookmark

AR = Use as required - = Non illustrated part # = New this model year

March 3, 2006

« RETURN TO GROUP INDEX

Instrument Panel Cover and Related Parts
Figure 08A-120

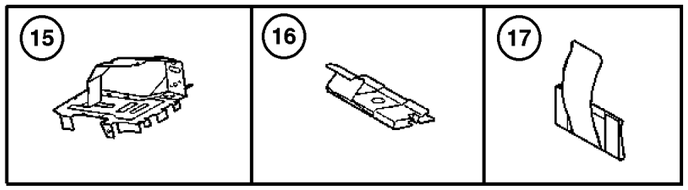

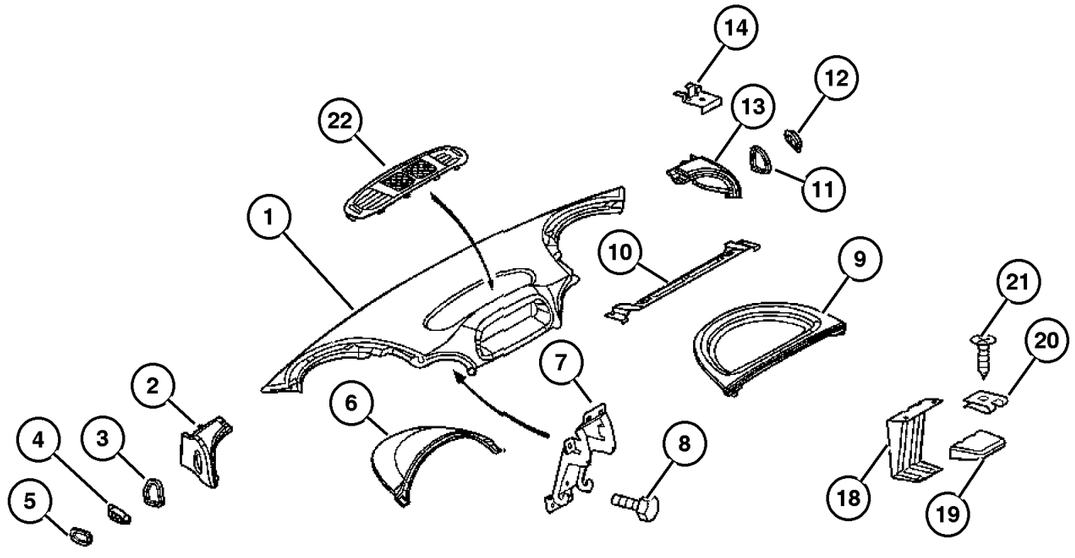

ITEM	PART NUMBER	QTY	LINE	SERIES	BODY	ENGINE	TRANS	TRIM	DESCRIPTION
		1	2, 6	L	51, 52, 54, 55, 56	EX8	DGZ		Right
		1	3, 7	L	02, 06	EX8	DGZ		Right
		1	3, 7	L	12, 15, 16	EX8	DGZ		Right
13	5122 877AA	1	2, 6	L	01, 02, 06	EX8	DGZ		HOUSING, Air Outlet
		1	2, 6	L	11, 12, 14, 15, 16	EX8	DGZ		
		1	3, 7	L	02, 06	EX8	DGZ		
		1	3, 7	L	12, 15, 16	EX8	DGZ		
14	5122 889AA	2	2, 6	L	01, 02, 06	EX8	DGZ		BRACKET, Instrument Panel
		2	2, 6	L	11, 12, 14, 15, 16	EX8	DGZ		
		2	2, 6	L	51, 52, 54, 55, 56	EX8	DGZ		
		2	3, 7	L	02, 06	EX8	DGZ		
		2	3, 7	L	12, 15, 16	EX8	DGZ		
15	5122 388AA	1	2, 6	L	01, 02, 06	EX8			BRACKET, Instrument Panel
		1	2, 6	L	11, 12, 14, 15, 16	EX8			
		1	2, 6	L	51, 52, 54, 55, 56	EX8			
		1	3, 7	L	02, 06	EX8			
		1	3, 7	L	12, 15, 16	EX8			
16	5125 589AA	2	2, 6	L	01, 02, 06	EX8			CLIP, Bracket
		2	2, 6	L	11, 12, 14, 15, 16	EX8			

Refer to Model Legend Information Bookmark

Instrument Panel Cover and Related Parts
Figure 08A-120

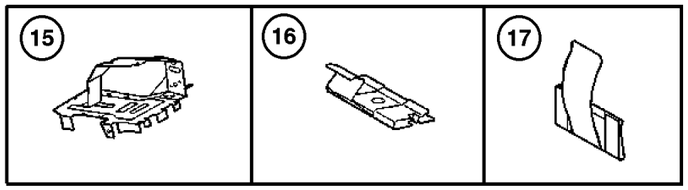

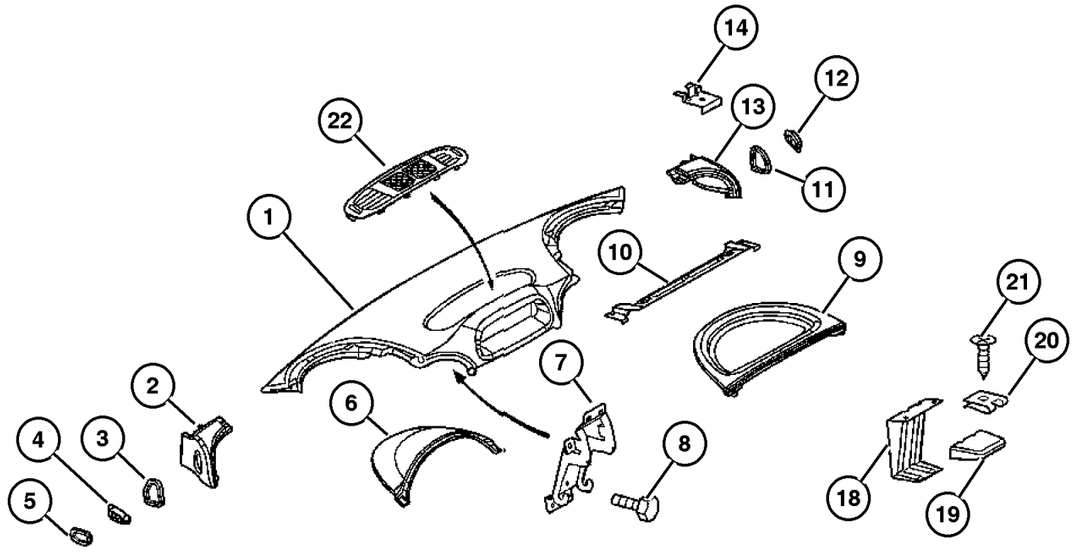

ITEM	PART NUMBER	QTY	LINE	SERIES	BODY	ENGINE	TRANS	TRIM	DESCRIPTION
		2	2, 6	L	51, 52, 54, 55, 56	EX8			
		2	3, 7	L	02, 06	EX8			
		2	3, 7	L	12, 15, 16	EX8			
17	5125 590AA	1	2, 6	L	01, 02, 06	EX8	DGZ		CLIP, Spring
		1	2, 6	L	11, 12, 14, 15, 16	EX8	DGZ		
		1	2, 6	L	51, 52, 54, 55, 56	EX8	DGZ		
		1	3, 7	L	02, 06	EX8	DGZ		
		1	3, 7	L	12, 15, 16	EX8	DGZ		
18	5122 394AA	1	2, 6	L	01, 02, 06	EX8	DGZ		BRACKET, Instrument Panel
		1	2, 6	L	11, 12, 14, 15, 16	EX8	DGZ		
		1	2, 6	L	51, 52, 54, 55, 56	EX8	DGZ		
		1	3, 7	L	02, 06	EX8	DGZ		
		1	3, 7	L	12, 15, 16	EX8	DGZ		
19	5122 942AA	1	2, 6	L	01, 02, 06	EX8	DGZ		PAD, Console Intermediate
		1	2, 6	L	11, 12, 14, 15, 16	EX8	DGZ		Intermediate
		1	2, 6	L	51, 52, 54, 55, 56	EX8	DGZ		Intermediate
		1	3, 7	L	02, 06	EX8	DGZ		Intermediate
		1	3, 7	L	12, 15, 16	EX8	DGZ		Intermediate
20	5125 867AA	2	2, 6	L	01, 02, 06	EX8	DGZ		NUT, Clip-On

Refer to Model Legend Information Bookmark

AR = Use as required - = Non illustrated part # = New this model year

March 3, 2006

Instrument Panel Cover and Related Parts
Figure 08A-120

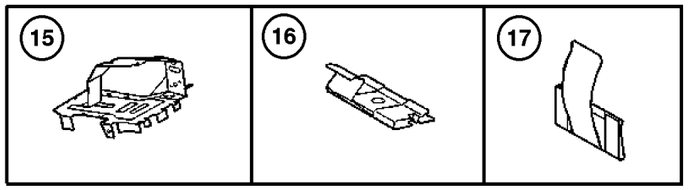

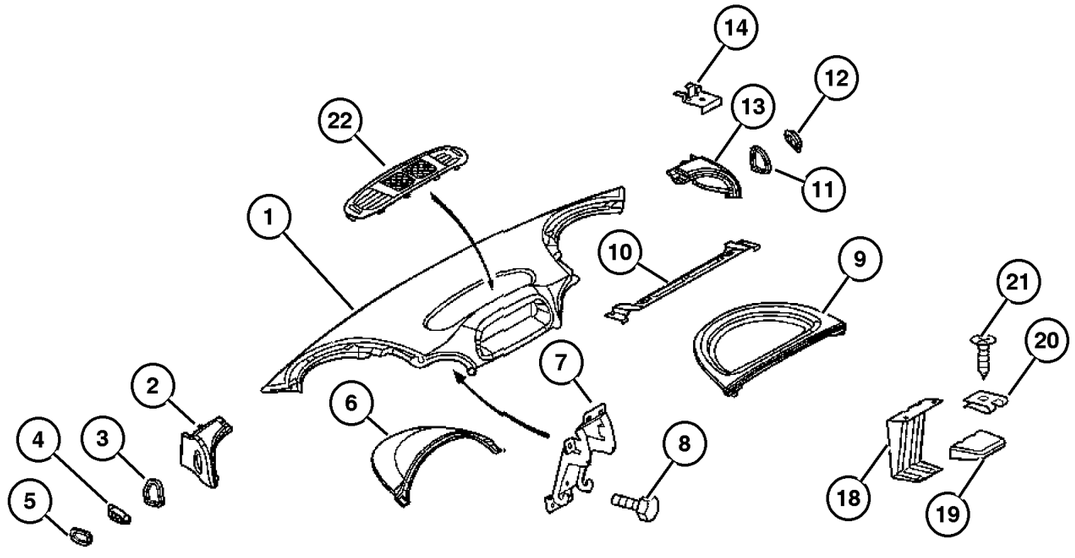

ITEM	PART NUMBER	QTY	LINE	SERIES	BODY	ENGINE	TRANS	TRIM	DESCRIPTION
		2	2, 6	L	11, 12, 14, 15, 16	EX8	DGZ		
		2	2, 6	L	51, 52, 54, 55, 56	EX8	DGZ		
		2	3, 7	L	02, 06	EX8	DGZ		
		2	3, 7	L	12, 15, 16	EX8	DGZ		
21									SCREW
	6104 610AA	5	2, 6	L	01, 02, 06	EX8	DGZ		
		2	2, 6	L	11, 12, 14, 15, 16	EX8	DGZ		
		2	2, 6	L	51, 52, 54, 55, 56	EX8	DGZ		
		2	3, 7	L	02, 06	EX8	DGZ		
		2	3, 7	L	12, 15, 16	EX8	DGZ		
22									GRILLE, Defroster
	5104 271AA	1	2, 6	L	01, 02, 06	EX8	DGZ		
		1	2, 6	L	11, 12, 14, 15, 16	EX8	DGZ		
		1	2, 6	L	51, 52, 54, 55, 56	EX8	DGZ		
		1	3, 7	L	02, 06	EX8	DGZ		
		1	3, 7	L	12, 15, 16	EX8	DGZ		

Refer to Model Legend Information Bookmark

AR = Use as required - = Non illustrated part # = New this model year

March 3, 2006

« RETURN TO GROUP INDEX

Instrument Panel Reinforcement
Figure 08A-125

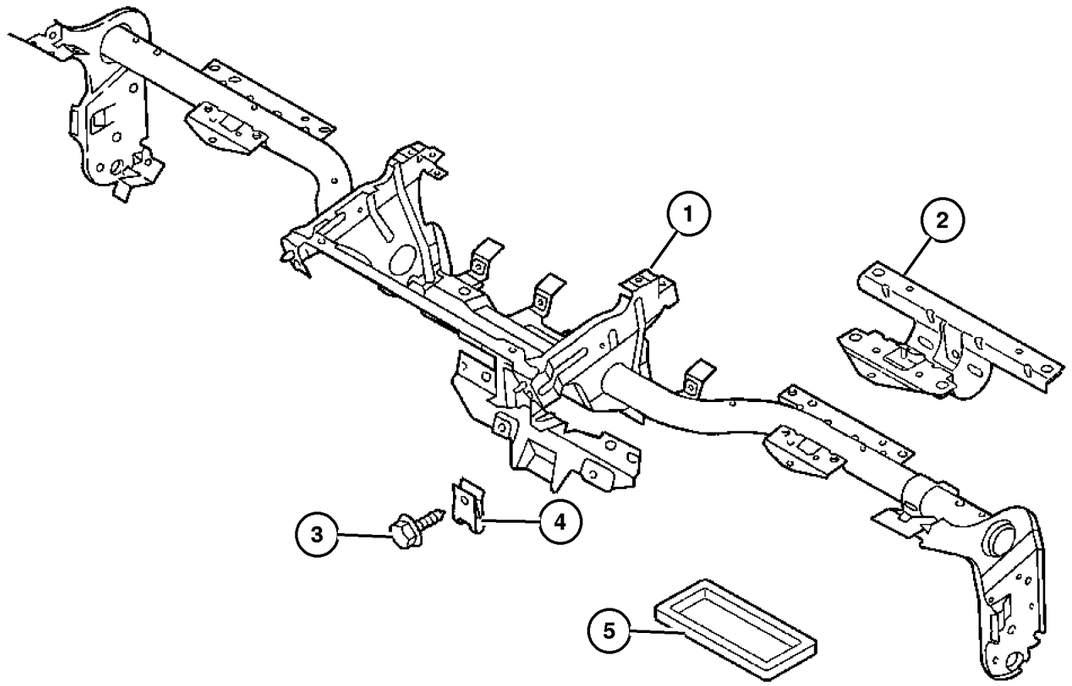

ITEM	PART NUMBER	QTY	LINE	SERIES	BODY	ENGINE	TRANS	TRIM	DESCRIPTION
1									FRAME, Instrument Panel
	5133 470AA	1	2, 6	L	01, 02, 06	EX8	DGZ		
		1	2, 6	L	11, 12, 14, 15, 16	EX8	DGZ		
		1	2, 6	L	51, 52, 54, 55, 56	EX8	DGZ		
		1	3, 7	L	02, 06	EX8	DGZ		
		1	3, 7	L	12, 15, 16	EX8	DGZ		
2									SUPPORT, Instrument Panel
	5122 400AA	1	2, 6	L	01, 02, 06	EX8	DGZ		
		1	2, 6	L	11, 12, 14, 15, 16	EX8	DGZ		
		1	2, 6	L	51, 52, 54, 55, 56	EX8	DGZ		
		1	3, 7	L	02, 06	EX8	DGZ		
		1	3, 7	L	12, 15, 16	EX8	DGZ		
3									SCREW
	6104 567AA	4	2, 6	L	01, 02, 06	EX8	DGZ		
		4	2, 6	L	11, 12, 14, 15, 16	EX8	DGZ		
		4	2, 6	L	51, 52, 54, 55, 56	EX8	DGZ		
		4	3, 7	L	02, 06	EX8	DGZ		
		4	3, 7	L	12, 15, 16	EX8	DGZ		
4									NUT, Clip-On
	5125 853AA	8	2, 6	L	11, 12, 14, 15, 16	EX8	DGZ		
		8	2, 6	L	51, 52, 54, 55, 56	EX8	DGZ		
		8	3, 7	L	12, 15, 16	EX8	DGZ		

Refer to Model Legend Information Bookmark

Instrument Panel Reinforcement
Figure 08A-125

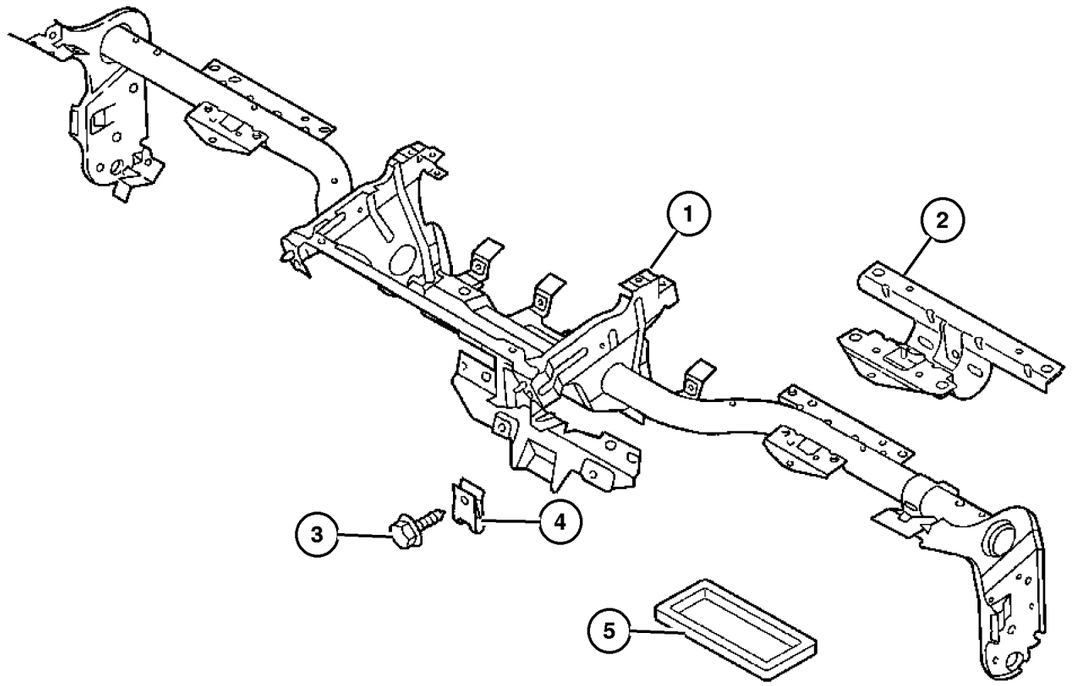

ITEM	PART NUMBER	QTY	LINE	SERIES	BODY	ENGINE	TRANS	TRIM	DESCRIPTION
	5125 855AA	6	2, 6	L	01, 02, 06	EX8	DGZ		
5		6	3, 7	L	02, 06	EX8	DGZ		SEAL
	5124 783AA	2	2, 6	L	01, 02, 06	EX8	DGZ		
		2	2, 6	L	11, 12, 14, 15, 16	EX8	DGZ		
		2	2, 6	L	51, 52, 54, 55, 56	EX8	DGZ		
		2	3, 7	L	02, 06	EX8	DGZ		
		2	3, 7	L	12, 15, 16	EX8	DGZ		

Refer to Model Legend Information Bookmark

Instrument Panel Cluster
Figure 08A-205

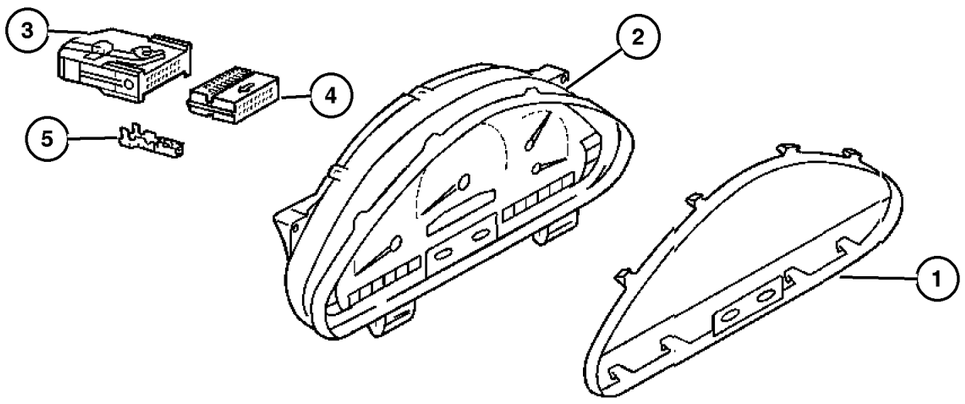

ITEM	PART NUMBER	QTY	LINE	SERIES	BODY	ENGINE	TRANS	TRIM	DESCRIPTION
1									LENS, Cluster
	5103 657AA	1	2, 6	L	01, 02, 06	EX8	DGZ		
		1	2, 6	L	11, 12, 14, 15, 16	EX8	DGZ		
		1	2, 6	L	51, 52, 54, 55, 56	EX8	DGZ		
		1	3, 7	L	02, 06	EX8	DGZ		
		1	3, 7	L	12, 15, 16	EX8	DGZ		
2									CLUSTER, Instrument Panel
	5174 082AC	1	2, 6	L	01, 02, 06	EX8	DGZ		[4Z2,4Z1]
		1	2, 6	L	11, 12, 14, 15, 16	EX8	DGZ		[4Z2,4Z1]
		1	2, 6	L	51, 52, 54, 55, 56	EX8	DGZ		[4Z2,4Z1]
		1	3, 7	L	02, 06	EX8	DGZ		[4Z2,4Z1]
		1	3, 7	L	12, 15, 16	EX8	DGZ		[4Z2,4Z1]
	5174 083AA	1	2, 6	L	01, 02, 06	EX8	DGZ		[3SL,4XS]
		1	2, 6	L	11, 12, 14, 15, 16	EX8	DGZ		[3SL,4XS]
		1	2, 6	L	51, 52, 54, 55, 56	EX8	DGZ		[3SL,4XS]
		1	3, 7	L	02, 06	EX8	DGZ		[3SL,4XS]
		1	3, 7	L	12, 15, 16	EX8	DGZ		[3SL,4XS]
3									CONNECTOR, Wiring
	5120 662AA	1	2, 6	L	01, 02, 06	EX8	DGZ		
		1	2, 6	L	11, 12, 14, 15, 16	EX8	DGZ		
		1	2, 6	L	51, 52, 54, 55, 56	EX8	DGZ		
		1	3, 7	L	02, 06	EX8	DGZ		

Refer to Model Legend Information Bookmark

Instrument Panel Cluster
Figure 08A-205

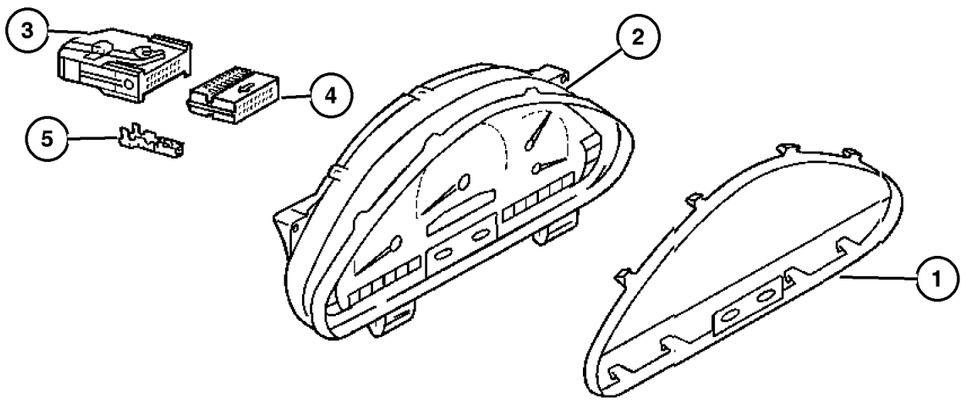

ITEM	PART NUMBER	QTY	LINE	SERIES	BODY	ENGINE	TRANS	TRIM	DESCRIPTION
		1	3, 7	L	12, 15, 16	EX8	DGZ		
4									CONNECTOR
	5103 750AA	1	2, 6	L	01, 02, 06	EX8	DGZ		
		1	2, 6	L	11, 12, 14, 15, 16	EX8	DGZ		
		1	2, 6	L	51, 52, 54, 55, 56	EX8	DGZ		
		1	3, 7	L	12, 15, 16	EX8	DGZ		
		1	3, 7	L	02, 06	EX8	DGZ		
5									TERMINAL
	5103 873AA	99	2, 6	L	01, 02, 06	EX8	DGZ		
		99	2, 6	L	11, 12, 14, 15, 16	EX8	DGZ		
		99	2, 6	L	51, 52, 54, 55, 56	EX8	DGZ		
		99	3, 7	L	02, 06	EX8	DGZ		
		99	3, 7	L	12, 15, 16	EX8	DGZ		

Refer to Model Legend Information Bookmark

Radio
Figure 08A-305

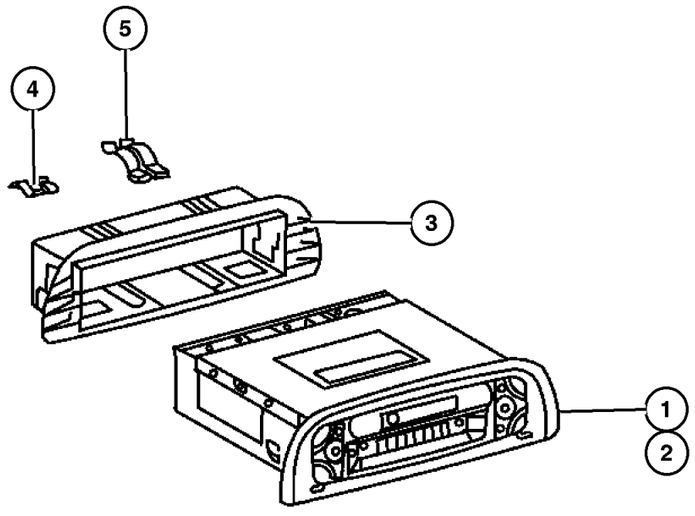

ITEM	PART NUMBER	QTY	LINE	SERIES	BODY	ENGINE	TRANS	TRIM	DESCRIPTION
1									RADIO
	5124 583AA	1	2, 6	L	01, 02, 06	EX8	DGZ		[RAF]
		1	2, 6	L	11, 12, 14, 15, 16	EX8	DGZ		[RAF]
		1	2, 6	L	51, 52, 54, 55, 56	EX8	DGZ		[RAF]
		1	3, 7	L	02, 06	EX8	DGZ		[RAF]
		1	3, 7	L	12, 15, 16	EX8	DGZ		[RAF]
2									RADIO, AM/FM with CD
	5124 585AA	1	2, 6	L	01, 02, 06	EX8	DGZ		[RBE]
		1	2, 6	L	11, 12, 14, 15, 16	EX8	DGZ		[RBE]
		1	2, 6	L	51, 52, 54, 55, 56	EX8	DGZ		[RBE]
		1	3, 7	L	02, 06	EX8	DGZ		[RBE]
		1	3, 7	L	12, 15, 16	EX8	DGZ		[RBE]
3									BEZEL, Instrument Panel, Radio Housing
	5122 939AA	1	2, 6	L	01, 02, 06	EX8	DGZ		
		1	2, 6	L	11, 12, 14, 15, 16	EX8	DGZ		
		1	2, 6	L	51, 52, 54, 55, 56	EX8	DGZ		
		1	3, 7	L	02, 06	EX8	DGZ		
		1	3, 7	L	12, 15, 16	EX8	DGZ		
4									CLIP, Spring
	5124 612AA	2	2, 6	L	01, 02, 06	EX8	DGZ		
		2	2, 6	L	11, 12, 14, 15, 16	EX8	DGZ		

Refer to Model Legend Information Bookmark

Radio
Figure 08A-305

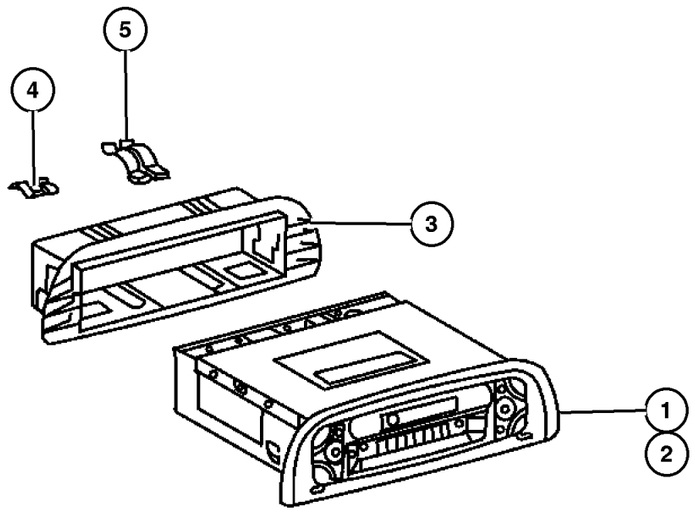

ITEM	PART NUMBER	QTY	LINE	SERIES	BODY	ENGINE	TRANS	TRIM	DESCRIPTION
		2	2, 6	L	51, 52, 54, 55, 56	EX8	DGZ		
		2	3, 7	L	02, 06	EX8	DGZ		
		2	3, 7	L	12, 15, 16	EX8	DGZ		
5	5124 613AA	2	2, 6	L	01, 02, 06	EX8	DGZ		CLIP, Spring
		2	2, 6	L	11, 12, 14, 15, 16	EX8	DGZ		
		2	2, 6	L	51, 52, 54, 55, 56	EX8	DGZ		
		2	3, 7	L	02, 06	EX8	DGZ		
		2	3, 7	L	12, 15, 16	EX8	DGZ		

Refer to Model Legend Information Bookmark

Antenna
Figure 08A-310

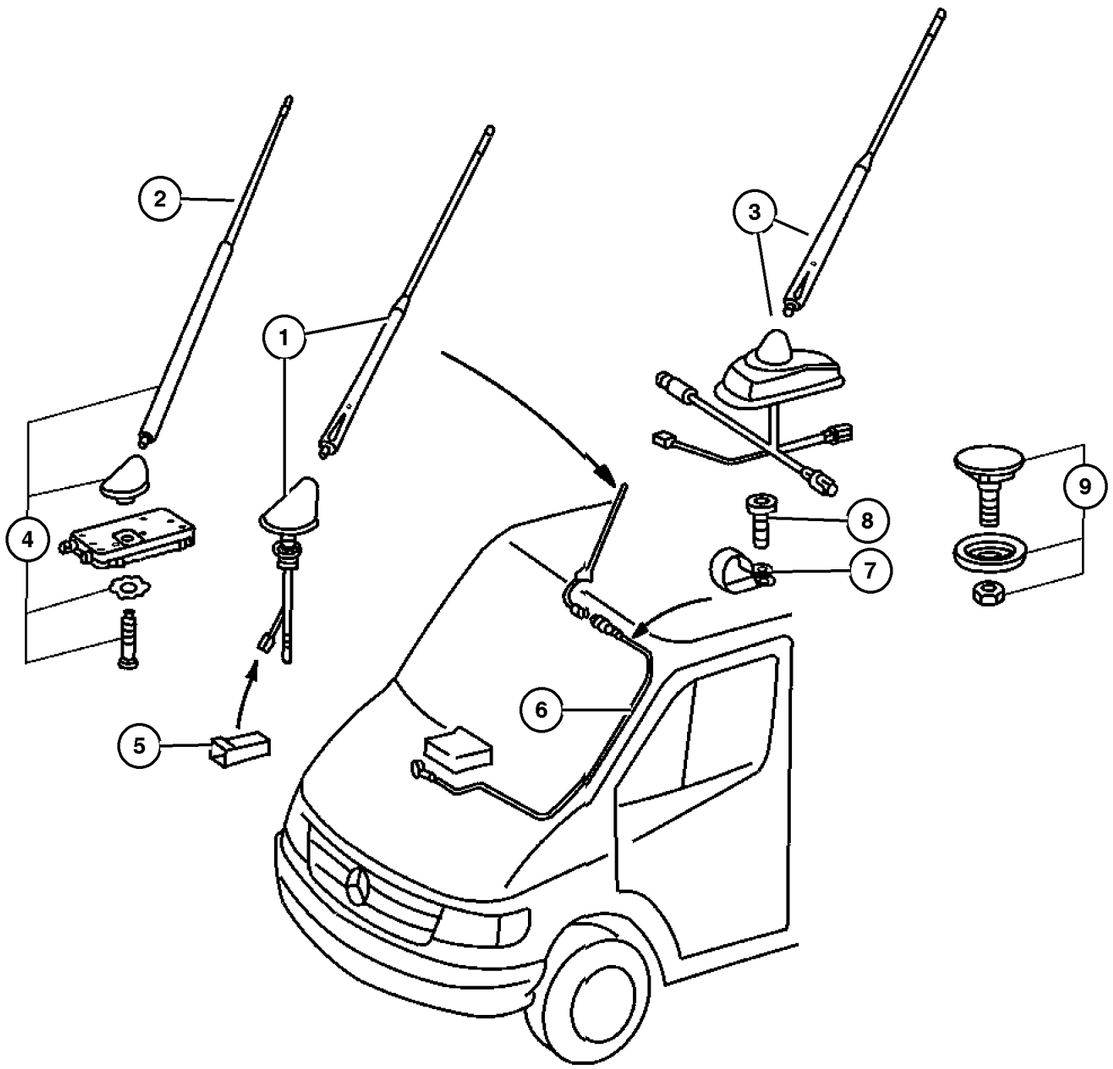

ITEM	PART NUMBER	QTY	LINE	SERIES	BODY	ENGINE	TRANS	TRIM	DESCRIPTION
1									ANTENNA
	5124 563AA	1	2, 6	L	01, 02, 06	EX8	DGZ		
		1	2, 6	L	11, 12, 14, 15, 16	EX8	DGZ		
		1	2, 6	L	51, 52, 54, 55, 56	EX8	DGZ		
		1	3, 7	L	02, 06	EX8	DGZ		
		1	3, 7	L	12, 15, 16	EX8	DGZ		
2									ANTENNA
	5124 561AA	1	2, 6	L	01, 02, 06	EX8	DGZ		
		1	2, 6	L	11, 12, 14, 15, 16	EX8	DGZ		
		1	2, 6	L	51, 52, 54, 55, 56	EX8	DGZ		
		1	3, 7	L	02, 06	EX8	DGZ		
		1	3, 7	L	12, 15, 16	EX8	DGZ		
3									ANTENNA
	5124 561AA	1	2, 6	L	01, 02, 06	EX8	DGZ		
		1	2, 6	L	11, 12, 14, 15, 16	EX8	DGZ		
		1	2, 6	L	51, 52, 54, 55, 56	EX8	DGZ		
		1	3, 7	L	02, 06	EX8	DGZ		
		1	3, 7	L	12, 15, 16	EX8	DGZ		
4									ANTENNA
	5133 980AA	1	2, 6	L	01, 02, 06	EX8	DGZ		
		1	2, 6	L	11, 12, 14, 15, 16	EX8	DGZ		
		1	2, 6	L	51, 52, 54, 55, 56	EX8	DGZ		

Refer to Model Legend Information Bookmark

Antenna
Figure 08A-310

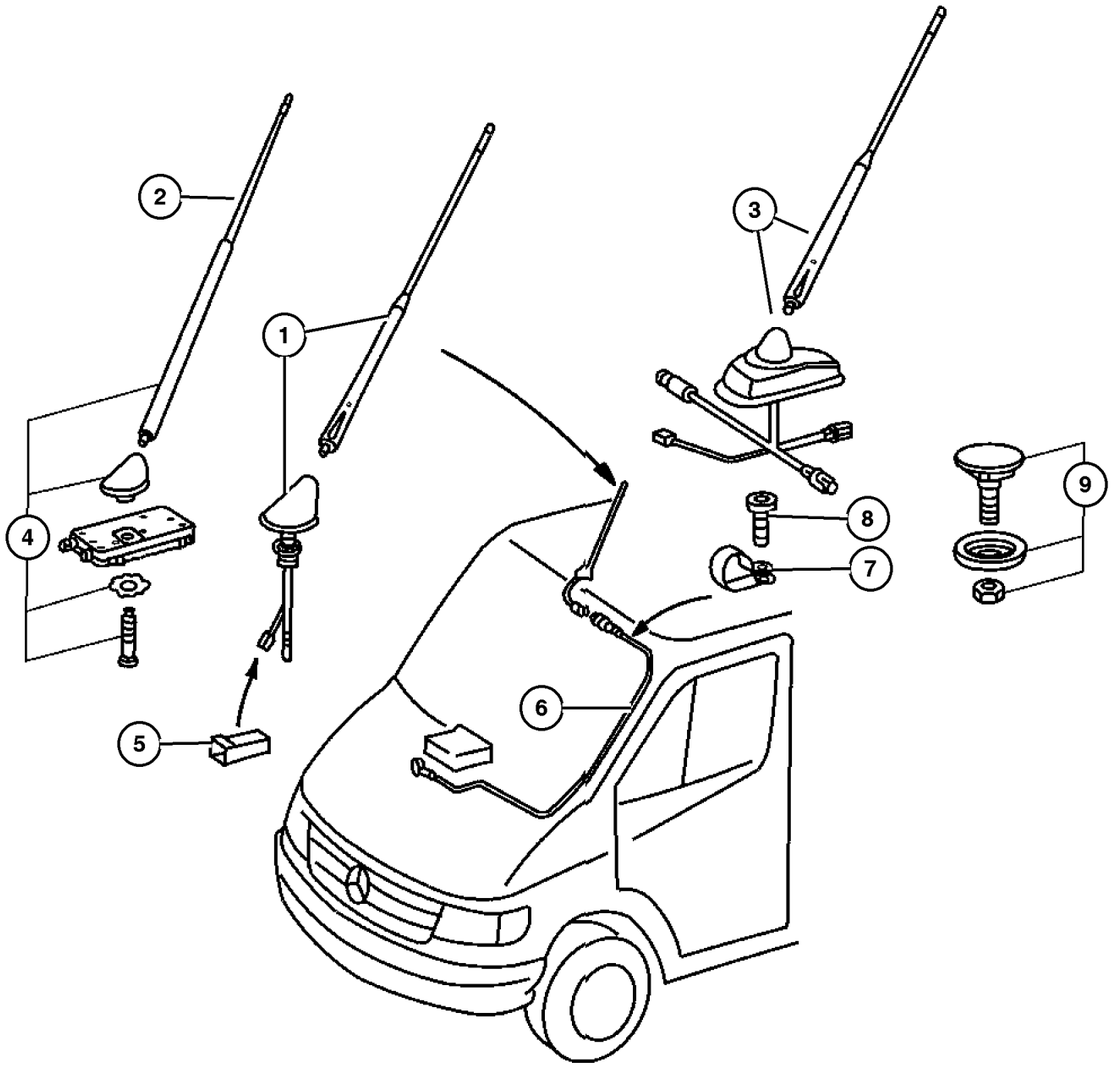

ITEM	PART NUMBER	QTY	LINE	SERIES	BODY	ENGINE	TRANS	TRIM	DESCRIPTION
		1	3, 7	L	02, 06	EX8	DGZ		
		1	3, 7	L	12, 15, 16	EX8	DGZ		
5									CONNECTOR
	5120 596AA	1	2, 6	L	11, 12, 14, 15, 16	EX8	DGZ		
		2	2, 6	L	11, 12, 14, 15, 16	EX8	DGZ		
		2	3, 7	L	12, 15, 16	EX8	DGZ		
6									CABLE, Antenna
	5133 983AA	1	2, 6	L	01, 02, 06	EX8	DGZ		
		1	2, 6	L	11, 12, 14, 15, 16	EX8	DGZ		
		1	2, 6	L	51, 52, 54, 55, 56	EX8	DGZ		
		1	3, 7	L	02, 06	EX8	DGZ		
		1	3, 7	L	12, 15, 16	EX8	DGZ		
7									CLAMP, Mounting
	5125 874AA	1	2, 6	L	01, 02, 06	EX8	DGZ		
		1	2, 6	L	11, 12, 14, 15, 16	EX8	DGZ		
		1	2, 6	L	51, 52, 54, 55, 56	EX8	DGZ		
		1	3, 7	L	02, 06	EX8	DGZ		
		1	3, 7	L	12, 15, 16	EX8	DGZ		
8									SCREW
	6104 504AA	1	2, 6	L	01, 02, 06	EX8	DGZ		
		1	2, 6	L	11, 12, 14, 15, 16	EX8	DGZ		
		1	2, 6	L	51, 52, 54, 55, 56	EX8	DGZ		

Refer to Model Legend Information Bookmark

Antenna
Figure 08A-310

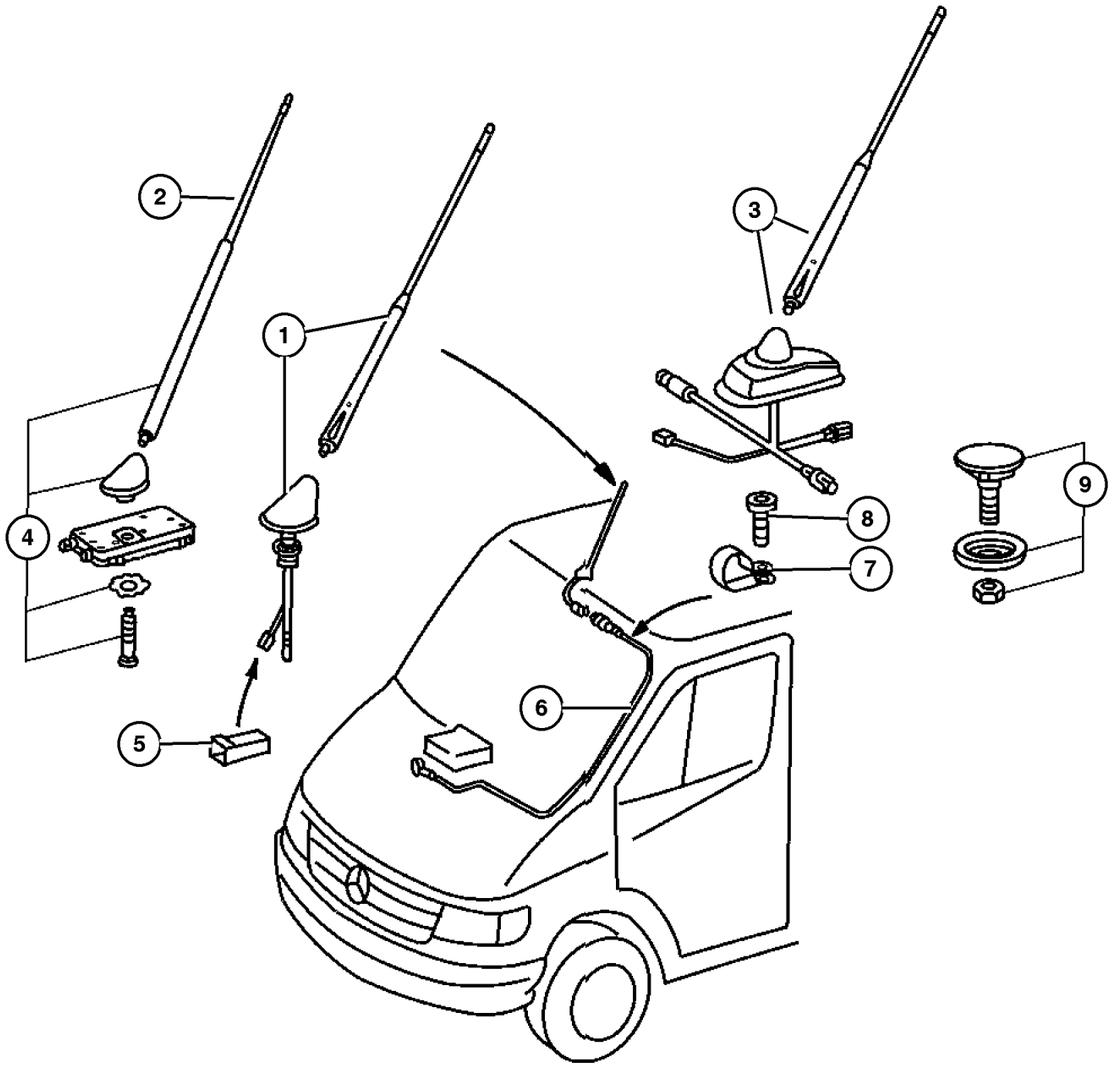

ITEM	PART NUMBER	QTY	LINE	SERIES	BODY	ENGINE	TRANS	TRIM	DESCRIPTION
		1	3, 7	L	02, 06	EX8	DGZ		
		1	3, 7	L	12, 15, 16	EX8	DGZ		
9									PANEL
	5124 422AA	1	2, 6	L	01, 02, 06	EX8	DGZ		
		1	2, 6	L	11, 12, 14, 15, 16	EX8	DGZ		
		1	2, 6	L	51, 52, 54, 55, 56	EX8	DGZ		
		1	3, 7	L	02, 06	EX8	DGZ		
		1	3, 7	L	12, 15, 16	EX8	DGZ		

Refer to Model Legend Information Bookmark

AR = Use as required - = Non illustrated part # = New this model year

March 3, 2006

« RETURN TO GROUP INDEX

Speakers
Figure 08A-315

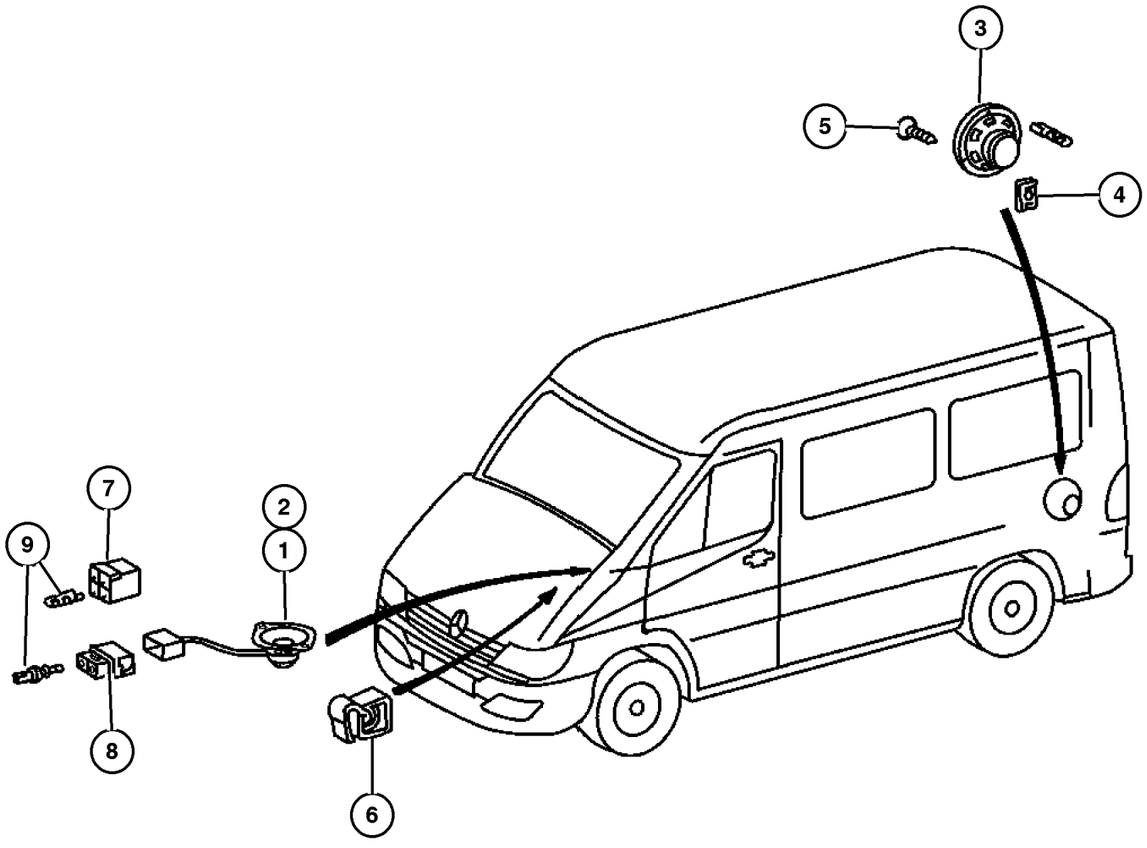

ITEM	PART NUMBER	QTY	LINE	SERIES	BODY	ENGINE	TRANS	TRIM	DESCRIPTION
1									SPEAKER, Front
	5103 762AC	2	2, 6	L	01, 02, 06				
		2	2, 6	L	11, 12, 14, 15, 16				
		2	2, 6	L	51, 52, 54, 55, 56				
		2	3, 7	L	12, 15, 16				
2									SPEAKER
	5142 455AA	1	2, 6	L	01, 02, 06	EX8	DGZ		
		1	2, 6	L	11, 12, 14, 15, 16	EX8	DGZ		
		1	2, 6	L	51, 52, 54, 55, 56	EX8	DGZ		
		1	3, 7	L	02, 06	EX8	DGZ		
		1	3, 7	L	12, 15, 16	EX8	DGZ		
3									SPEAKER
	5142 456AA	2	2, 6	L	11, 12, 14, 15, 16	EX8	DGZ		
		2	2, 6	L	51, 52, 54, 55, 56	EX8	DGZ		
		2	3, 7	L	12, 15, 16	EX8	DGZ		
4									NUT, Clip-On
	5125 853AA	8	2, 6	L	11, 12, 14, 15, 16	EX8	DGZ		
		8	2, 6	L	51, 52, 54, 55, 56	EX8	DGZ		
		8	3, 7	L	12, 15, 16	EX8	DGZ		
5									SCREW, Tapping
	6104 615AA	4	2, 6	L	01, 02, 06	EX8	DGZ		

Refer to Model Legend Information Bookmark

Speakers
Figure 08A-315

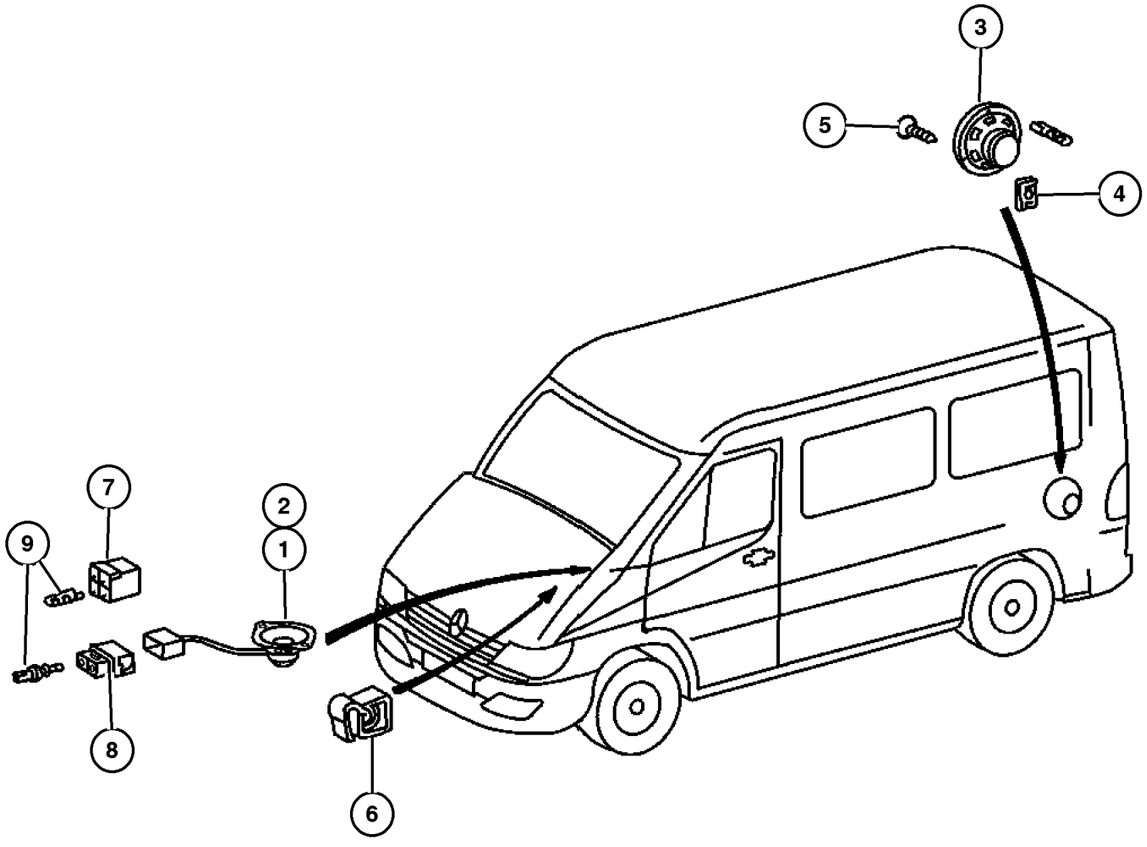

ITEM	PART NUMBER	QTY	LINE	SERIES	BODY	ENGINE	TRANS	TRIM	DESCRIPTION
		4	2, 6	L	11, 12, 14, 15, 16	EX8	DGZ		
		4	2, 6	L	51, 52, 54, 55, 56	EX8	DGZ		
		4	3, 7	L	02, 06	EX8	DGZ		
		4	3, 7	L	12, 15, 16	EX8	DGZ		
6									RETAINER, Wiring Harness
	5126 041AA	99	2, 6	L	01, 02, 06	EX8	DGZ		
		99	2, 6	L	11, 12, 14, 15, 16	EX8	DGZ		
		99	2, 6	L	51, 52, 54, 55, 56	EX8	DGZ		
		99	3, 7	L	02, 06	EX8	DGZ		
		99	3, 7	L	12, 15, 16	EX8	DGZ		
7									CONNECTOR
	5103 753AA	99	2, 6	L	01, 02, 06	EX8	DGZ		
		99	2, 6	L	11, 12, 14, 15, 16	EX8	DGZ		
		99	2, 6	L	51, 52, 54, 55, 56	EX8	DGZ		
		99	3, 7	L	02, 06	EX8	DGZ		
		99	3, 7	L	12, 15, 16	EX8	DGZ		
8									CONNECTOR
	5120 694AA	1	2, 6	L	01, 02, 06	EX8	DGZ		
		1	2, 6	L	11, 12, 14, 15, 16	EX8	DGZ		
		1	2, 6	L	51, 52, 54, 55, 56	EX8	DGZ		
		1	3, 7	L	02, 06	EX8	DGZ		
		1	3, 7	L	12, 15, 16	EX8	DGZ		
9									TERMINAL

Refer to Model Legend Information Bookmark

Speakers
Figure 08A-315

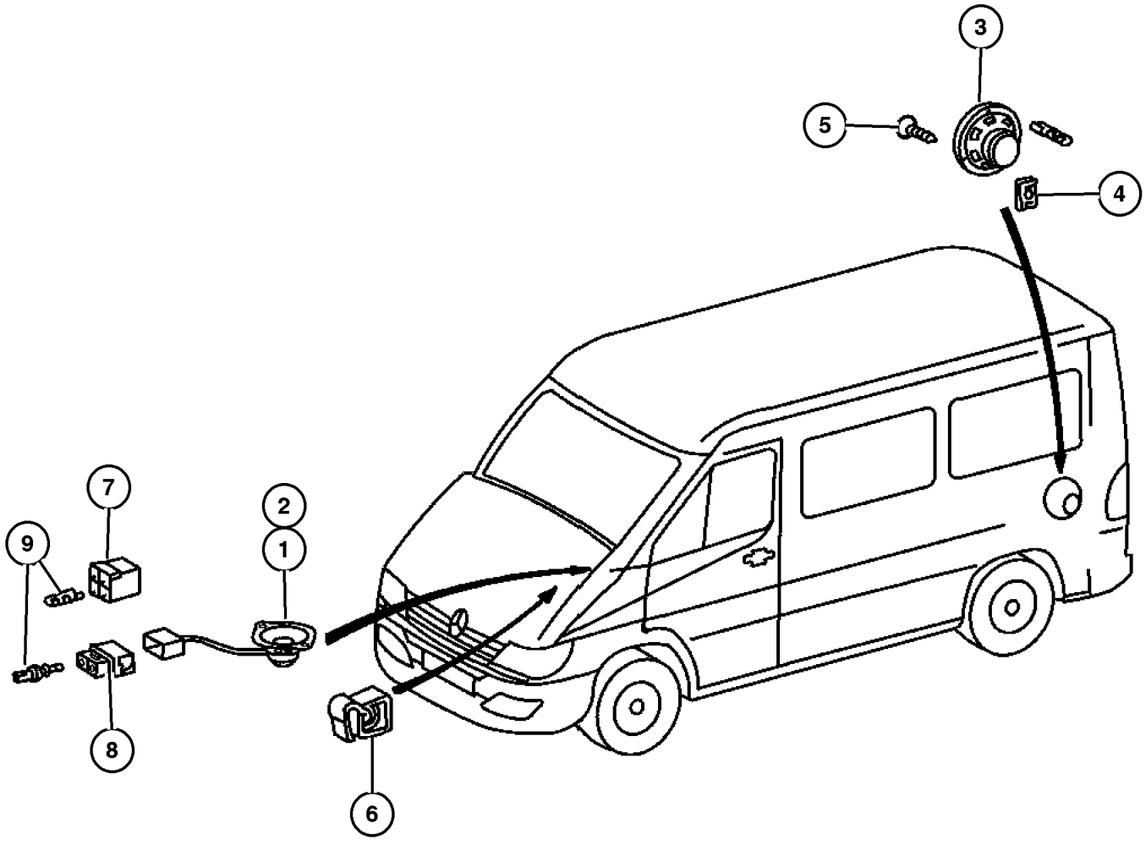

ITEM	PART NUMBER	QTY	LINE	SERIES	BODY	ENGINE	TRANS	TRIM	DESCRIPTION
	5103 828AA	99	2, 6	L	01, 02, 06	EX8	DGZ		
		99	2, 6	L	11, 12, 14, 15, 16	EX8	DGZ		
		99	2, 6	L	51, 52, 54, 55, 56	EX8	DGZ		
		99	3, 7	L	02, 06	EX8	DGZ		
		99	3, 7	L	12, 15, 16	EX8	DGZ		

Refer to Model Legend Information Bookmark

Console Cup Holder
Figure 08A-405

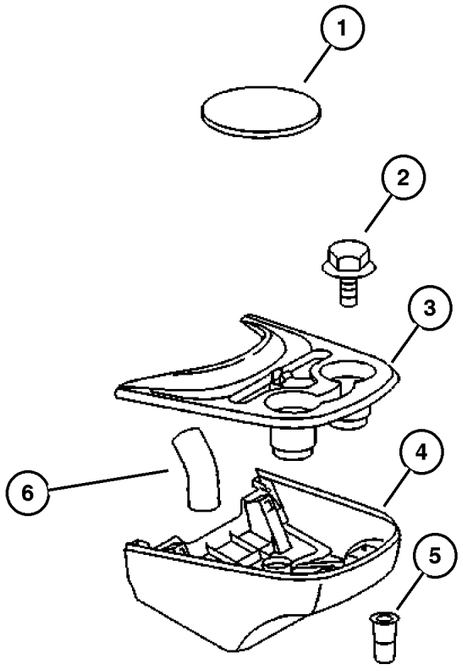

ITEM	PART NUMBER	QTY	LINE	SERIES	BODY	ENGINE	TRANS	TRIM	DESCRIPTION
1									MAT, Single Cup
	5122 953AA	2	2, 6	L	01, 02, 06	EX8	DGZ		
		2	2, 6	L	11, 12, 14, 15, 16	EX8	DGZ		
		2	2, 6	L	51, 52, 54, 55, 56	EX8	DGZ		
		2	3, 7	L	02, 06	EX8	DGZ		
		2	3, 7	L	12, 15, 16	EX8	DGZ		
2									SCREW, Hex Flange Head
	6104 121AA	4	2, 6	L	01, 02, 06	EX8	DGZ		Lid Lock, Rear
		4	2, 6	L	11, 12, 14, 15, 16	EX8	DGZ		Lid Lock, Rear
		4	2, 6	L	51, 52, 54, 55, 56	EX8	DGZ		Lid Lock, Rear
		4	3, 7	L	02, 06	EX8	DGZ		Lid Lock, Rear
		4	3, 7	L	12, 15, 16	EX8	DGZ		Lid Lock, Rear
3									CUP HOLDER, Lid
	5104 254AA	1	2, 6	L	01, 02, 06	EX8	DGZ		
		1	2, 6	L	11, 12, 14, 15, 16	EX8	DGZ		
		1	2, 6	L	51, 52, 54, 55, 56	EX8	DGZ		
		1	3, 7	L	02, 06	EX8	DGZ		
		1	3, 7	L	12, 15, 16	EX8	DGZ		
4									HOUSING, Cup Holder
	5104 255AA	1	2, 6	L	01, 02, 06	EX8	DGZ		
		1	2, 6	L	11, 12, 14, 15, 16	EX8	DGZ		
		1	2, 6	L	51, 52, 54, 55, 56	EX8	DGZ		

Refer to Model Legend Information Bookmark

Console Cup Holder
Figure 08A-405

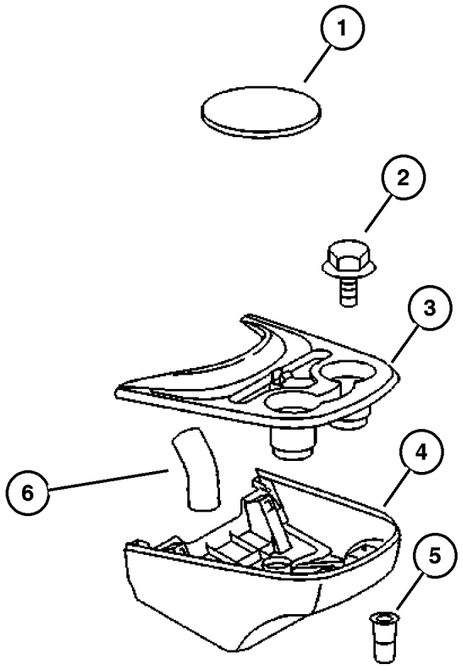

ITEM	PART NUMBER	QTY	LINE	SERIES	BODY	ENGINE	TRANS	TRIM	DESCRIPTION
		1	3, 7	L	02, 06	EX8	DGZ		
		1	3, 7	L	12, 15, 16	EX8	DGZ		
5									NUT, Rivet
	5133 975AA	4	2, 6	L	01, 02, 06	EX8	DGZ		
		4	2, 6	L	11, 12, 14, 15, 16	EX8	DGZ		
		4	2, 6	L	51, 52, 54, 55, 56	EX8	DGZ		
		4	3, 7	L	02, 06	EX8	DGZ		
		4	3, 7	L	12, 15, 16	EX8	DGZ		
6									HOSE
	5104 488AA	1	2, 6	L	01, 02, 06	EX8	DGZ		
		1	2, 6	L	11, 12, 14, 15, 16	EX8	DGZ		
		1	2, 6	L	51, 52, 54, 55, 56	EX8	DGZ		
		1	3, 7	L	02, 06	EX8	DGZ		
		1	3, 7	L	12, 15, 16	EX8	DGZ		

Refer to Model Legend Information Bookmark

AR = Use as required - = Non illustrated part # = New this model year

March 3, 2006

« RETURN TO GROUP INDEX

«

Group – 009
Engine Mounting

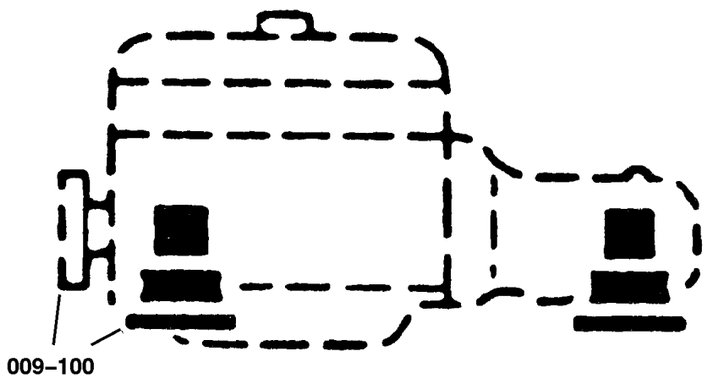

GROUP 9 - Engine Mounting

Illustration Title	Group-Fig. No.
Engine Mounting	
Engine Mounting	Fig. 009-110
Transmission Mounting	Fig. 009-120

009–100 **Engine Mounting** 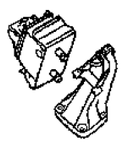			

Engine Mounting
Figure 009-110

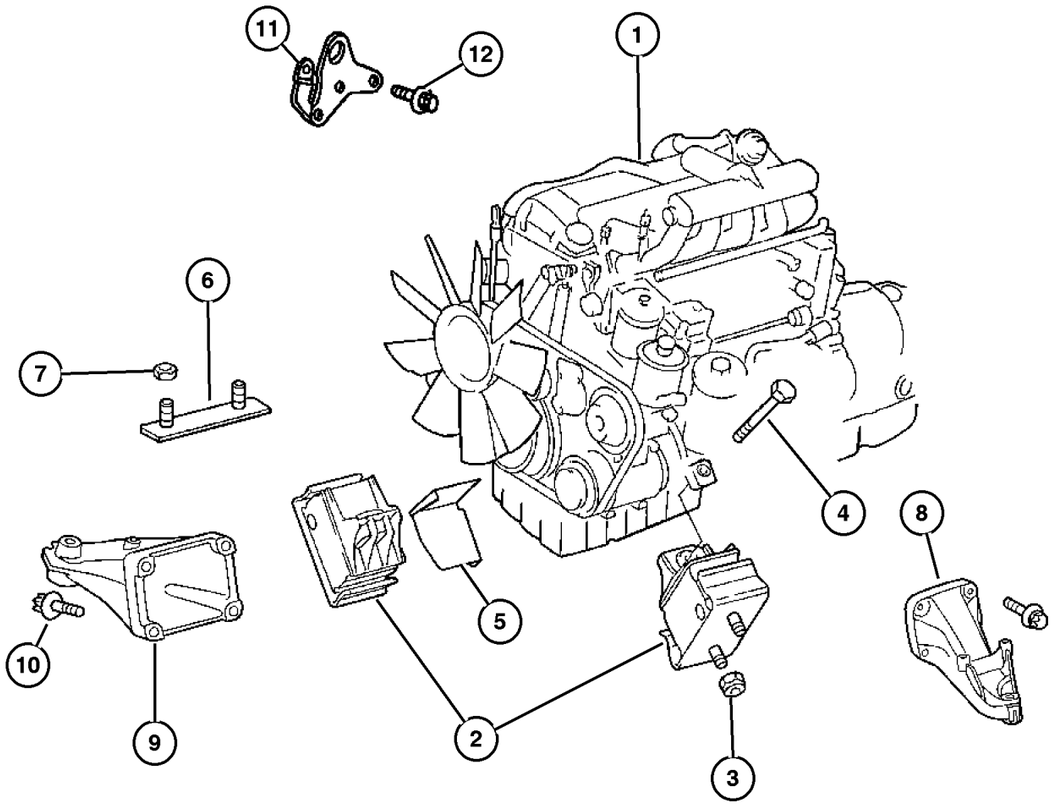

ITEM	PART NUMBER	QTY	LINE	SERIES	BODY	ENGINE	TRANS	TRIM	DESCRIPTION
NOTE:									
Sales Codes:									
[DGZ]=5 Speed Automatic [W5A380] Transmission									
[EX8]=2.7L I5 Turbo Diesel Engine									
1									ENGINE, Complete, See Group [2. 7LD-HO], (NOT SERVICED) (Not Serviced)
2									RUBBER, RUBBER-MOUNT
	5104 035AA	2	2, 6			EX8	DGZ		
		2	3, 7			EX8	DGZ		
3									NUT, [M10X1.5]
	6104 717AA	4	2, 6			EX8	DGZ		
		4	3, 7			EX8	DGZ		
4									BOLT, [M12X1.5X55.0]
	6104 239AA	2	2, 6			EX8	DGZ		
		2	3, 7			EX8	DGZ		
5									SHIELD, Engine Mount
	5117 714AA	1	2, 6			EX8	DGZ		
		1	3, 7			EX8	DGZ		
6									PLATE, Engine Mount
	5117 695AA	1	2, 6			EX8	DGZ		
		1	3, 7			EX8	DGZ		
7									NUT, M6x1.00
	5127 449AA	2	2, 6			EX8	DGZ		
		2	3, 7			EX8	DGZ		
8	5117 659AA	1	2, 3, 6, 7			EX8	DGZ		BRACKET, Engine Mount
9	5103 988AA	1	2, 3, 6, 7			EX8	DGZ		SUPPORT, Engine
10									SCREW, [M8X1.25X40.00]
	6104 027AA	1	2, 6			EX8	DGZ		
		1	3, 7			EX8	DGZ		
11	5136 757AA	1	2, 3, 6, 7			EX8	DGZ		BRACKET, Engine Lift
12	5073 723AB	3	2, 3, 6, 7			EX8	DGZ		SCREW

Refer to Model Legend Information Bookmark

Transmission Mounting
Figure 009-120

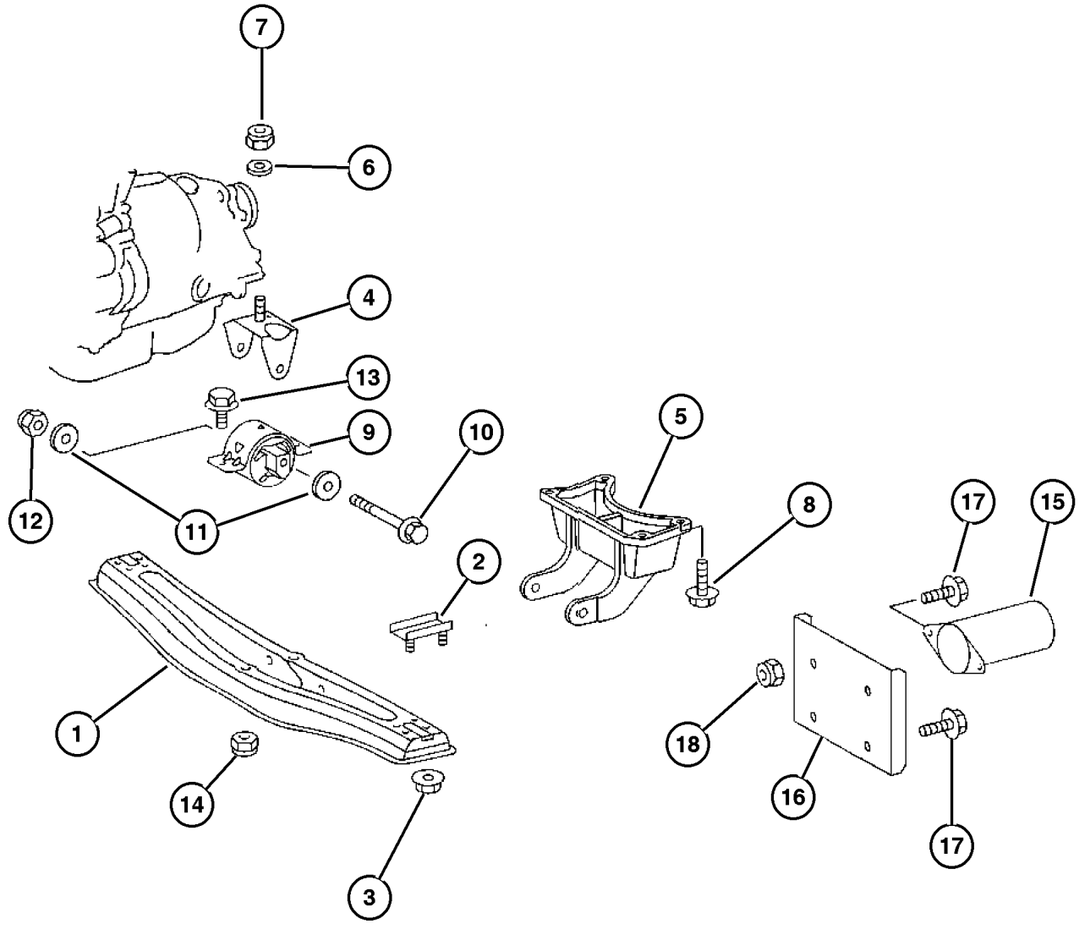

ITEM	PART NUMBER	QTY	LINE	SERIES	BODY	ENGINE	TRANS	TRIM	DESCRIPTION
NOTE:									
Sales Codes:									
[DGZ]=5 Speed Automatic [W5A380] Transmission									
[EX8]=2.7L I5 Turbo Diesel Engine									
1									SUPPORT, Engine
	5104 036AA	1	2, 6			EX8	DGZ		
		1	3, 7			EX8	DGZ		
2									BRACKET, Engine Mount
	5117 698AA	1	2, 6			EX8	DGZ		
		1	3, 7			EX8	DGZ		
3									NUT, [M10X1.5]
	6104 717AA	4	2, 6			EX8	DGZ		
		4	3, 7			EX8	DGZ		
4									BRACKET, Engine Mount
	5117 712AA	1	2, 6			EX8	DGZ		
		1	3, 7			EX8	DGZ		
5									BRACKET, Transmission Mount
	5104 037AA	1	2, 6			EX8	DGZ		
		1	3, 7			EX8	DGZ		
6	5104 614AA	1	3, 7			EX8	DGZ		WASHER
7									NUT, [M12X1.5]
	6104 718AA	1	2, 6			EX8	DGZ		
		1	3, 7			EX8	DGZ		
		1	3, 7			EX8	DGZ		W/O 4XS
8									BOLT, Hex Head, [M8X1.25X30.0]
	6104 198AA	4	2, 6			EX8	DGZ		
		4	3, 7			EX8	DGZ		
9									RUBBER, RUBBER-MOUNT
	5104 038AA	1	2, 6			EX8	DGZ		
		1	3, 7			EX8	DGZ		
10									BOLT, [M6.0X1.0X23.0]
	6104 229AA	1	2, 6			EX8	DGZ		
		1	3, 7			EX8	DGZ		
11									WASHER, Flat
	5104 641AA	2	2, 6			EX8	DGZ		
		2	3, 7			EX8	DGZ		
12									NUT, [M10X1.5]
	6104 717AA	1	2, 6			EX8	DGZ		
		1	3, 7			EX8	DGZ		
13									BOLT, Hex Flange Head, M10x1.50x25
	6104 215AA	2	2, 6			EX8	DGZ		
		2	3, 7			EX8	DGZ		
14									NUT, [M10X1.5]
	6104 717AA	2	2, 6			EX8	DGZ		

Refer to Model Legend Information Bookmark

AR = Use as required - = Non illustrated part # = New this model year

March 3, 2006

« RETURN TO GROUP INDEX

»

Transmission Mounting
Figure 009-120

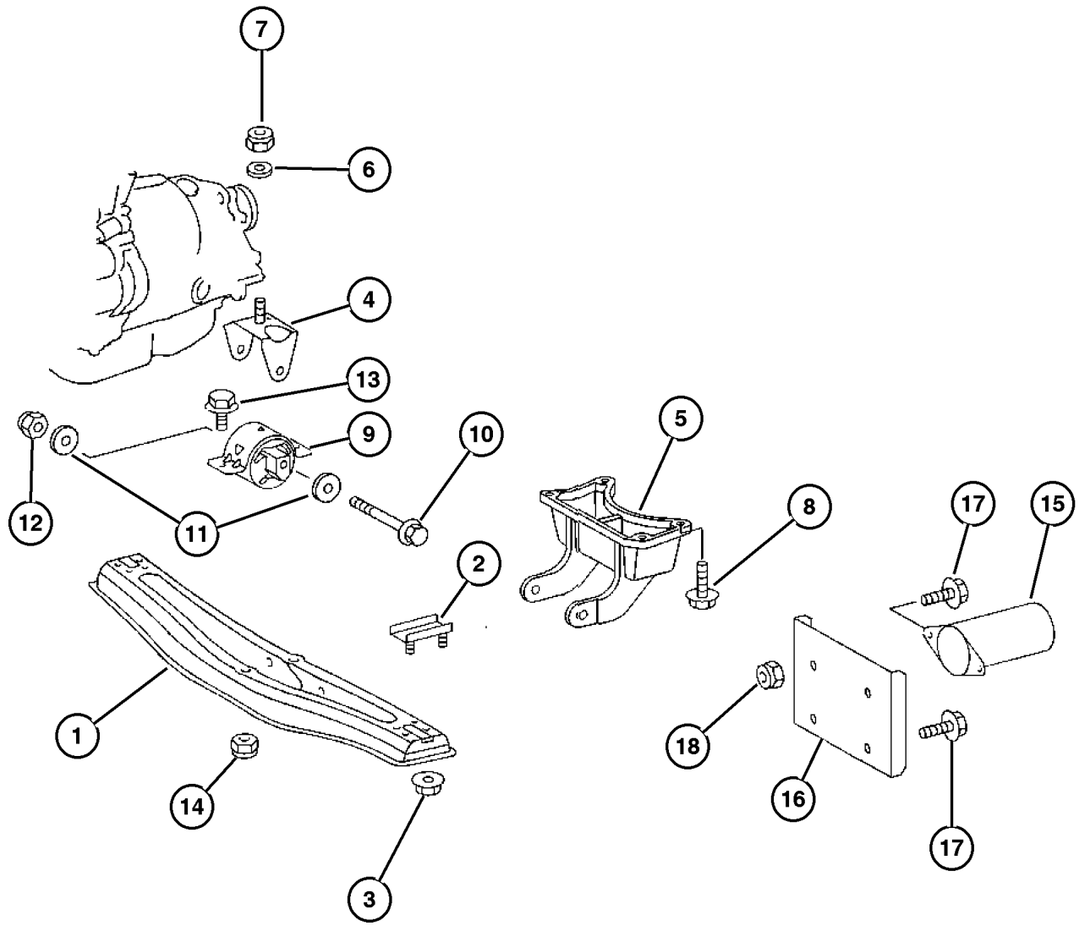

ITEM	PART NUMBER	QTY	LINE	SERIES	BODY	ENGINE	TRANS	TRIM	DESCRIPTION
		2	3, 7			EX8	DGZ		
15									ISOLATOR, Engine Mount
	5117 716AA	1	2, 6			EX8	DGZ		
		1	3, 7			EX8	DGZ		
16									BRACKET, Engine Roll Dampener
	5133 781AA	1	2, 6			EX8	DGZ		
		1	3, 7			EX8	DGZ		
17									SCREW, [M8X1.25X16.0]
	6104 195AA	2	2, 6			EX8	DGZ		
		2	3, 7			EX8	DGZ		
18									NUT, [M8X1.25]
	6104 716AA	2	2, 6			EX8	DGZ		
		2	3, 7			EX8	DGZ		

Refer to Model Legend Information Bookmark

AR = Use as required - = Non illustrated part # = New this model year

March 3, 2006

« RETURN TO GROUP INDEX

«

Group – 2.7LD–HO

2.7L Diesel – Mercedes Benz [EX8]

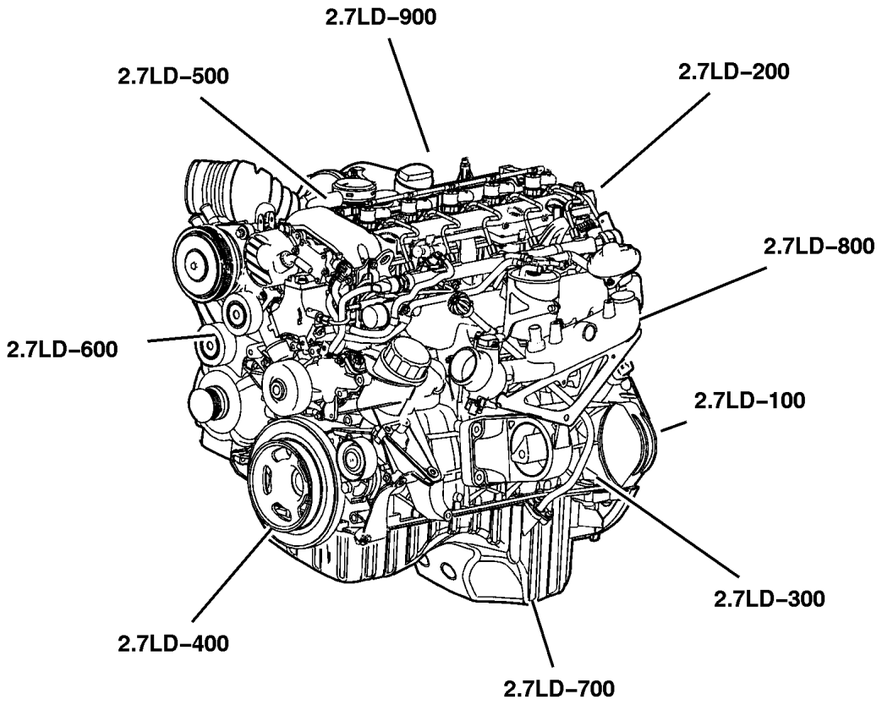

2.7LD–HO–100 Engine Identification 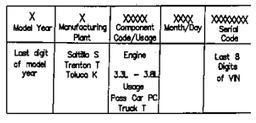 X Model Year: Last digit of model year X Manufacturing Plant: Saltillo S, Trenton T, Toluca K XXXXX Component Code/Usage: Engine 3.3L – 3.8L Usage Pass Car PC Truck T XXXX Month/Day XXXXXXXX Serial Code: Last 8 Digits of VIN	**2.7LD–HO–200** Cylinder Head 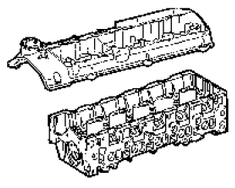	**2.7LD–HO–300** Cylinder Block 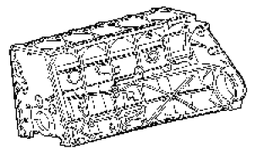	**2.7LD–HO–400** Crankshaft, Piston and Drive Plate 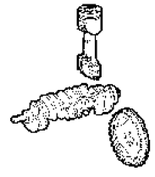
2.7LD–HO–500 Camshafts and Valves 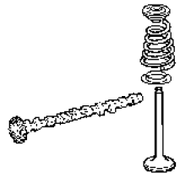	**2.7LD–HO–600** Timing Belt and Cover 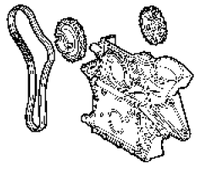	**2.7LD–HO–700** Engine Oiling 	**2.7LD–HO–800** Manifolds 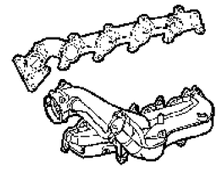

Group – 2.7LD–HO

2.7L Diesel – Mercedes Benz [EX8]

2.7LD–HO–900 Crankcase Ventilation 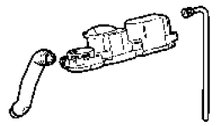			

GROUP 2.7LD-HO - 2.7L Diesel - Mercedes Benz [EX8]

Illustration Title	Group-Fig. No.
Engine Identification	
Engine Complete 2.7L Diesel [EX8]	Fig. 2.7LD-HO-105
Cylinder Head	
Cylinder Head 2.7L Diesel [EX8]	Fig. 2.7LD-HO-205
Cylinder Head Cover 2.7L Diesel [EX8]	Fig. 2.7LD-HO-210
Cylinder Block	
Cylinder Block And Related Parts 2.7L Diesel [EX8]	Fig. 2.7LD-HO-305
Crankshaft, Piston and Drive Plate	
Crankshaft And Pistons 2.7L Diesel [EX8]	Fig. 2.7LD-HO-405
Camshafts and Valves	
Camshaft And Valves 2.7L Diesel [EX8]	Fig. 2.7LD-HO-505
Timing Belt and Cover	
Timing Cover And Chain 2.7L Diesel [EX8]	Fig. 2.7LD-HO-605
Vaccum Pump 2.7L Diesel [EX8]	Fig. 2.7LD-HO-610
Engine Oiling	
Oil Pump 2.7L Diesel [EX8]	Fig. 2.7LD-HO-705
Oil Cooler And Filter 2.7L Diesel [EX8]	Fig. 2.7LD-HO-710
Oil Pan 2.7L Diesel [EX8]	Fig. 2.7LD-HO-715
Turbo, Oil Feed And Return Lines 2.7L Diesel [EX8]	Fig. 2.7LD-HO-720
Manifolds	
Intake Manifold 2.7L Diesel [EX8]	Fig. 2.7LD-HO-805
Exhaust Manifold 2.7L Diesel [EX8]	Fig. 2.7LD-HO-810
Crankcase Ventilation	
Crankcase Ventilation 2.7L Diesel [EX8]	Fig. 2.7LD-HO-905

Engine Complete 2.7L Diesel [EX8]
Figure 2.7LD-HO-105

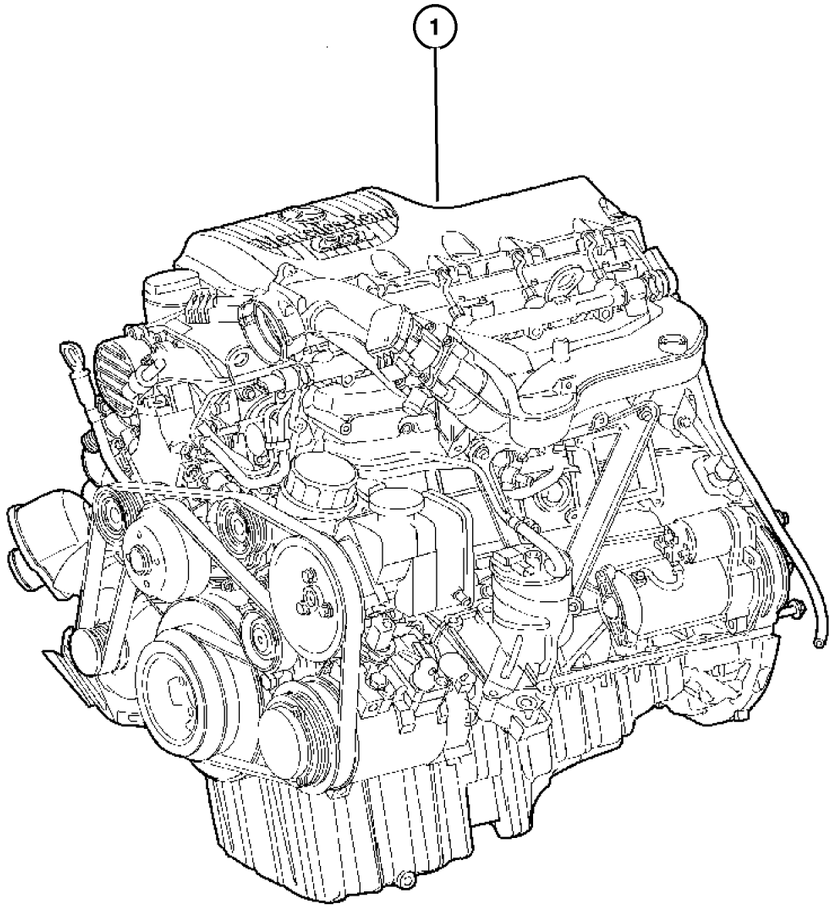

ITEM	PART NUMBER	QTY	LINE	SERIES	BODY	ENGINE	TRANS	TRIM	DESCRIPTION
NOTE:									
Sales Codes:									
[EX8] = 2.7L Inline 5 Cylinder Turbo Diesel Engine									
[NAS] = 50 State Emissions									
1	5117 145AA	1	2, 3, 6, 7			EX8	DGZ		ENGINE, Complete, Diesel

Refer to Model Legend Information Bookmark

AR = Use as required - = Non illustrated part # = New this model year

March 3, 2006

RETURN TO GROUP INDEX

Cylinder Head 2.7L Diesel [EX8]
Figure 2.7LD-HO-205

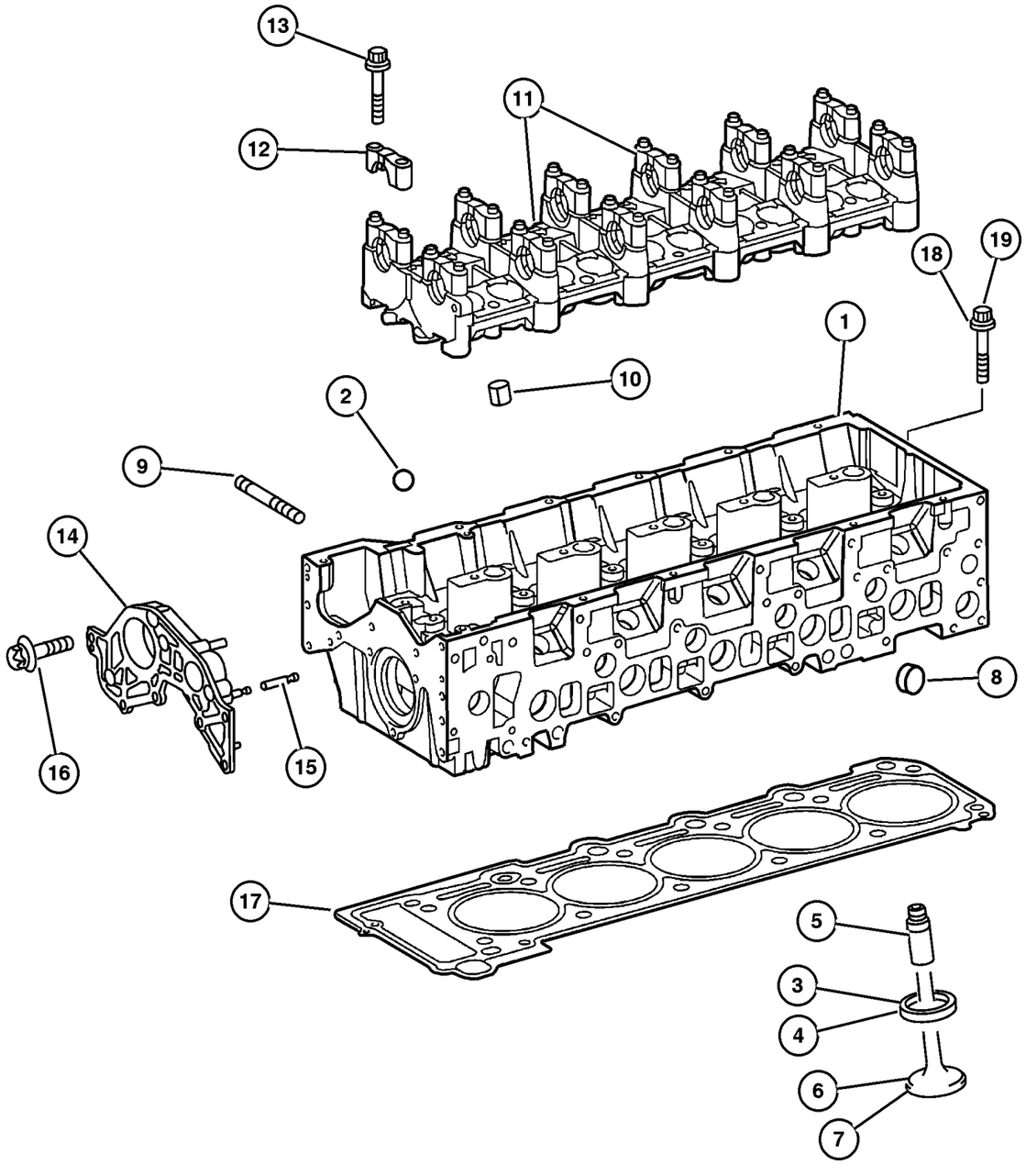

ITEM	PART NUMBER	QTY	LINE	SERIES	BODY	ENGINE	TRANS	TRIM	DESCRIPTION
NOTE:									
Sales Codes:									
[EX8] = 2.7L Inline 5 Cylinder Turbo Diesel Engine									
[NAS] = 50 State Emissions									
1	5136 759AA	1	2, 3, 6, 7			EX8	DGZ		HEAD, Cylinder
2	5080 045AA	5	2, 3, 6, 7			EX8	DGZ		BALL
3									SEAT, Intake Valve
	5117 407AA	1	2, 3, 6, 7			EX8	DGZ		[29.47mm]
	5135 830AA	10	2, 3, 6, 7			EX8	DGZ		[31.22mm]
4									SEAT, Exhaust Valve
	5117 410AA	10	2, 3, 6, 7			EX8	DGZ		[27.67mm]
	5135 831AA	10	2, 3, 6, 7			EX8	DGZ		[30.12mm]
5	5080 044AB	20	2, 3, 6, 7			EX8	DGZ		GUIDE, Intake/Exhaust Valve, Standard Size, Valve
6	5117 399AA	10	2, 3, 6, 7			EX8	DGZ		VALVE, Intake, Standard
7	5117 402AA	10	2, 3, 6, 7			EX8	DGZ		VALVE, Engine Exhaust
8									PLUG, Expansion
	5080 071AA	1	2, 3, 6, 7			EX8	DGZ		[18mm]
	5080 026AB	8	2, 3, 6, 7			EX8	DGZ		[22mm]
9	5080 027AA	11	2, 3, 6, 7			EX8	DGZ		STUD
10	5073 868AA	2	2, 3, 6, 7			EX8	DGZ		SLEEVE
11	5080 072AA	1	2, 3, 6, 7			EX8	DGZ		HOUSING, Camshaft Bearing, With Camshaft Bearing Caps
12									COVER, Serviced In Item 12 Housing, (NOT SERVICED) (Not Serviced)
13	5073 921AA	24	2, 3, 6, 7			EX8	DGZ		SCREW, Camshaft Bearing Cap To Cylinder Head, Mounting
14									CAP, Serviced In Item 2, (NOT SERVICED) (Not Serviced)
15	5080 080AA	1	2, 3, 6, 7			EX8	DGZ		PIN
16	5073 701AA	6	2, 3, 6, 7			EX8	DGZ		SCREW, End Cap To Cylinder Head, Mounting
17	5134 783AA	1	2, 3, 6, 7			EX8	DGZ		GASKET, Cylinder Head
18	5073 703AA	12	2, 3, 6, 7			EX8	DGZ		BOLT, Cylinder Head, Cylinder Head To Engine Block, Mounting
19	6104 035AA	2	2, 3, 6, 7			EX8	DGZ		SCREW, [M8X1.25X90.00], Cylinder Head, Mounting

Refer to Model Legend Information Bookmark

Cylinder Head Cover 2.7L Diesel [EX8]
Figure 2.7LD-HO-210

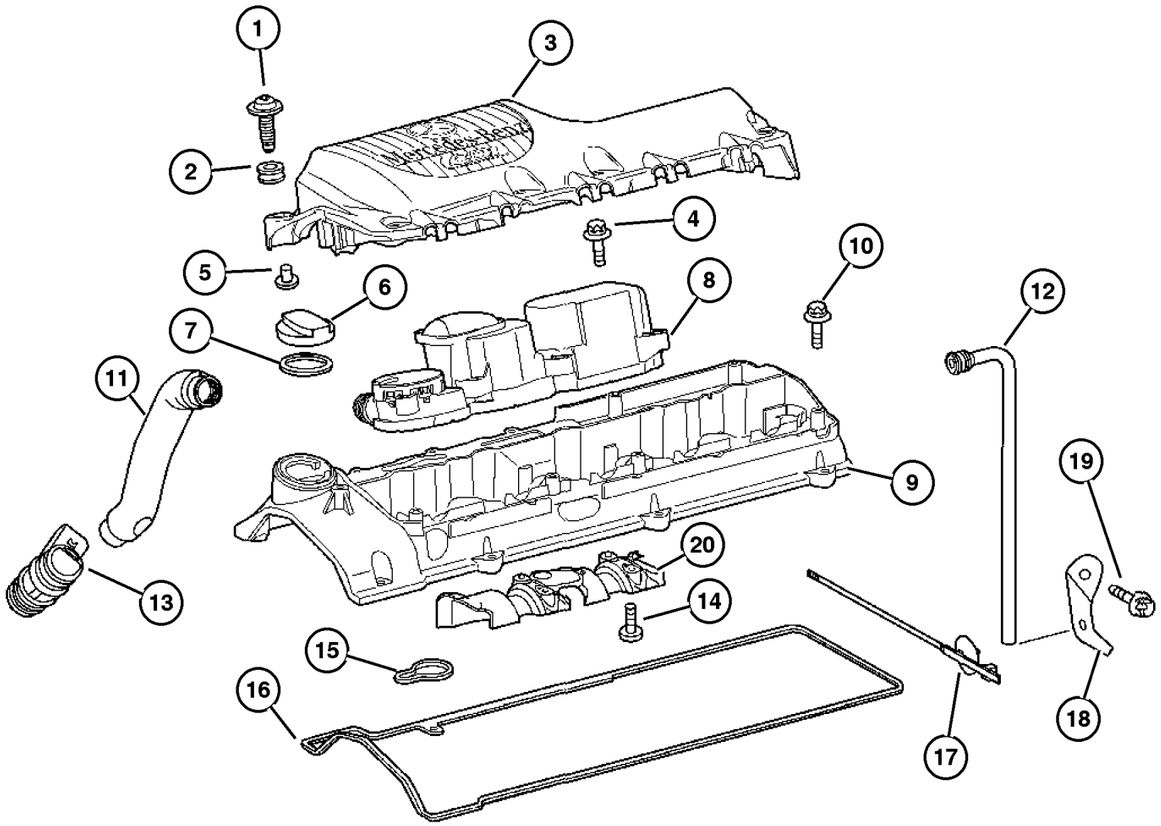

ITEM	PART NUMBER	QTY	LINE	SERIES	BODY	ENGINE	TRANS	TRIM	DESCRIPTION
NOTE:									
Sales Codes:									
[EX8] = 2.7L Inline 5 Cylinder Turbo Diesel Engine									
[NAS] = 50 State Emissions									
1	5103 968AA	7	2, 3, 6, 7			EX8	DGZ		SCREW, Engine Cover To Cylinder Head Cover, Mounting
2	5125 943AA	7	2, 3, 6, 7			EX8	DGZ		GROMMET, Engine Cover To Cylinder Head Cover, Mounting
3									COVER, Engine
	5117 287AA	1	2, 3, 6, 7			EX8	DGZ		
	5137 002AB	1	2, 3, 6, 7			EX8	DGZ		Intake Runner Cover
4	6104 684AA	7	2, 3, 6, 7			EX8	DGZ		SCREW, [M6.0X1.0X28.0], Oil Seperator, Mounting
5	5125 840AA	7	2, 3, 6, 7			EX8	DGZ		SLEEVE, Engine Cover, Mounting
6	5080 172AA	1	2, 3, 6, 7			EX8	DGZ		CAP, Oil Filler
7	5080 088AA	1	2, 3, 6, 7			EX8	DGZ		GASKET, Oil Filler Cap
8	5137 030AA	1	2, 3, 6, 7			EX8	DGZ		SEPERATOR, Oil
9	5117 166AA	1	2, 3, 6, 7			EX8	DGZ		COVER, Cylinder Head
10	6104 008AA	8	2, 3, 6, 7			EX8	DGZ		SCREW, [M6X1.00X30.00], Cylinder Head Cover, Mounting
11	5117 234AB	1	2, 3, 6, 7			EX8	DGZ		HOSE, Air Induction
12	5117 291AA	1	2, 3, 6, 7			EX8	DGZ		HOSE
13	5117 289AA	1	2, 3, 6, 7			EX8	DGZ		TUBE, Crankcase Vent Valve
14	6104 670AA	2	2, 3, 6, 7			EX8	DGZ		SCREW, [M5.0X0.8X9.0], Cylinder Head Cover, Mounting
15	5080 083AA	5	2, 3, 6, 7			EX8	DGZ		GASKET, Fuel Injector
16	5117 284AA	1	2, 3, 6, 7			EX8	DGZ		GASKET, Cylinder Head Cover
17	5126 078AA	99	2, 3, 6, 7			EX8	DGZ		TIE STRAP, Push In
18	5080 302AB	5	2, 3, 6, 7			EX8	DGZ		RETAINER, Fuel Injector
19	5073 824AA	1	2, 3, 6, 7			EX8	DGZ		SCREW, Injector Line, Mounting
20	5117 223AA	1	2, 3, 6, 7			EX8	DGZ		RETAINER, Crankshaft Rear Oil Seal

Refer to Model Legend Information Bookmark

Cylinder Block And Related Parts 2.7L Diesel [EX8]
Figure 2.7LD-HO-305

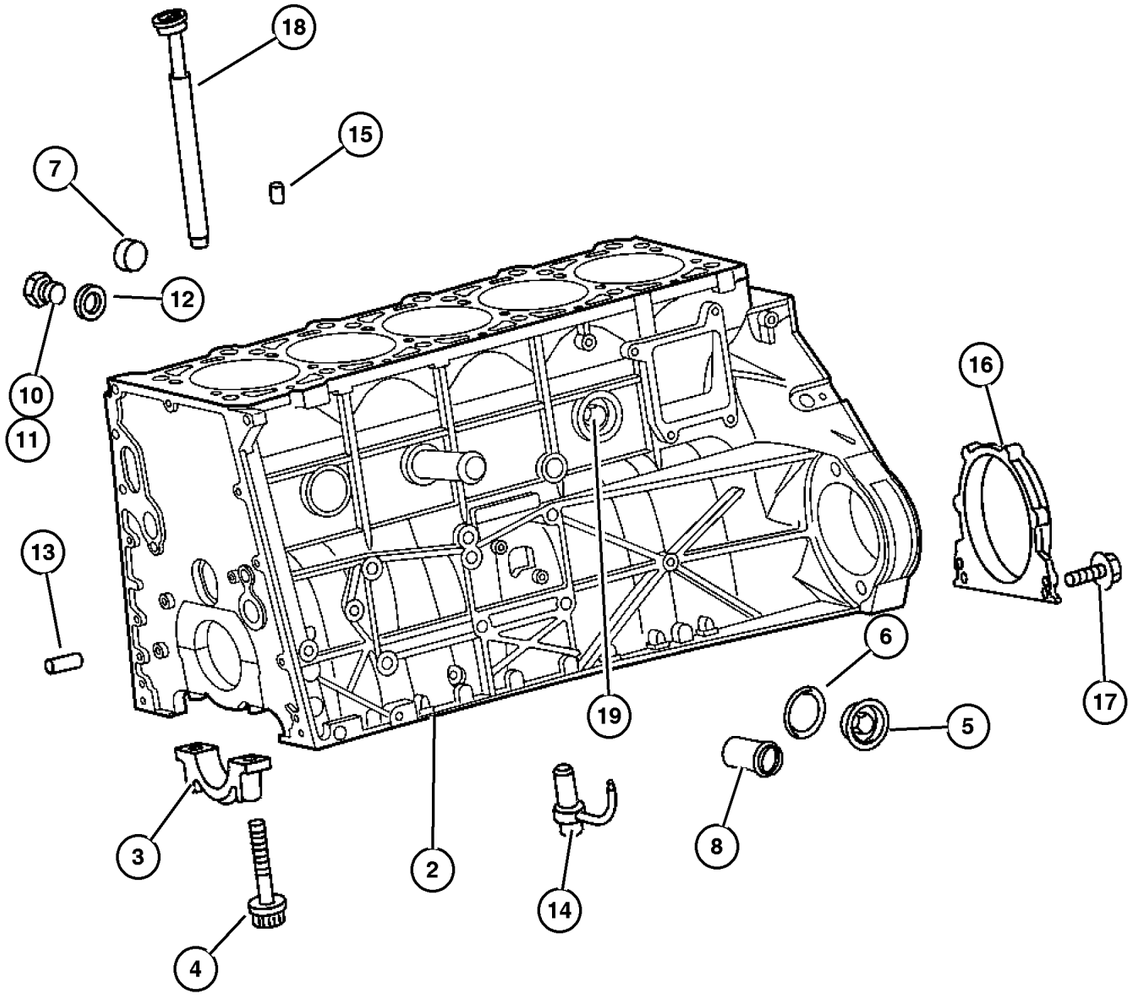

ITEM	PART NUMBER	QTY	LINE	SERIES	BODY	ENGINE	TRANS	TRIM	DESCRIPTION
NOTE:									
Sales Codes:									
[EX8] = 2.7L Inline 5 Cylinder Turbo Diesel Engine									
[NAS] = 50 State Emissions									
-1	5103 994AA-	1	2, 3, 6, 7			EX8	DGZ		GASKET KIT, Engine, Lower
2	5073 918AB	1	2, 3, 6, 7			EX8	DGZ		BLOCK, Cylinder, Bare Engine Block
3									CAP, Main, Serviced With Item 2, (NOT SERVICED) (Not Serviced)
4									BOLT, Main Bearing Cap, Serviced With Item 2, (NOT SERVICED) (Not Serviced)
5	5073 837AA	2	2, 3, 6, 7			EX8	DGZ		PLUG, Screw, Cylinder Block
6	5073 850AA	2	2, 3, 6, 7			EX8	DGZ		O RING
7	5073 860AA	3	2, 3, 6, 7			EX8	DGZ		PLUG, Expansion
8	5073 861AA	1	2, 3, 6, 7			EX8	DGZ		CONNECTOR
-9	5073 864AA-	1	2, 3, 6, 7			EX8	DGZ		BALL
10	6104 463AA	1	2, 3, 6, 7			EX8	DGZ		PLUG, [M12X1.5X15.0]
11	5073 890AA	1	2, 3, 6, 7			EX8	DGZ		PLUG
12	5073 891AA	1	2, 3, 6, 7			EX8	DGZ		O RING
13	5073 869AA	2	2, 3, 6, 7			EX8	DGZ		DOWEL
14	5073 895AA	5	2, 3, 6, 7			EX8	DGZ		JET, Piston Oil Cooler
15	5073 868AA	2	2, 3, 6, 7			EX8	DGZ		SLEEVE
16	5073 887AB	1	2, 3, 6, 7			EX8	DGZ		SEAL, Crankshaft Oil, Rear
17	6104 006AA	6	2, 3, 6, 7			EX8	DGZ		BOLT, [M6X1.00X20.00], Rear Seal Retainer, Mounting
18	5073 894AA	1	2, 3, 6, 7			EX8	DGZ		PIPE, Oil Return
19	5174 457AA	1	2, 3, 6, 7			EX8	DGZ		HEATER, Engine Block

Refer to Model Legend Information Bookmark

AR = Use as required - = Non illustrated part # = New this model year

March 3, 2006

RETURN TO GROUP INDEX

Crankshaft And Pistons 2.7L Diesel [EX8]
Figure 2.7LD-HO-405

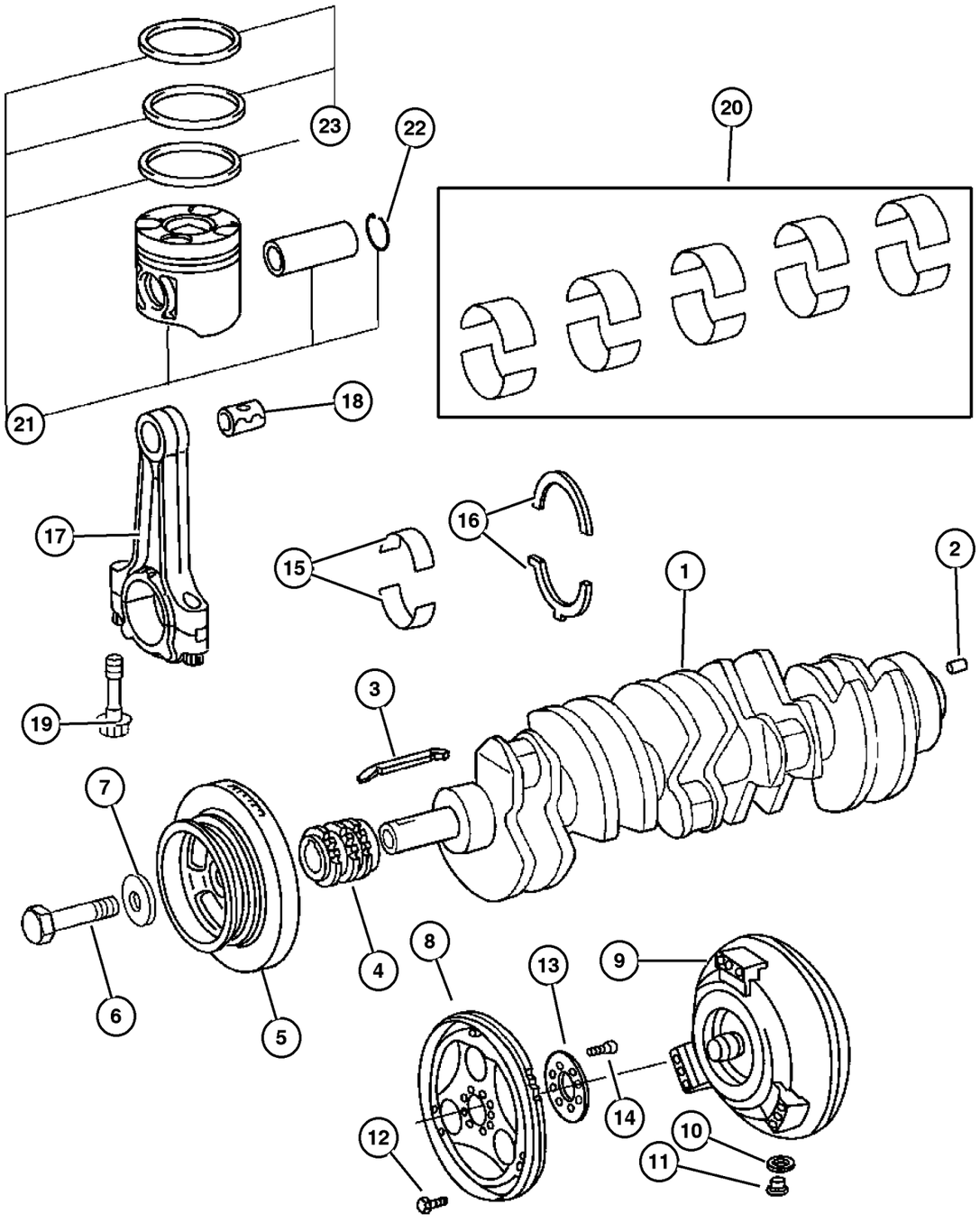

ITEM	PART NUMBER	QTY	LINE	SERIES	BODY	ENGINE	TRANS	TRIM	DESCRIPTION
NOTE:									
Sales Codes:									
[EX8] = 2.7L Inline 5 Cylinder Turbo Diesel Engine									
[NAS] = 50 State Emissions									
1	5080 012AA	1	2, 3, 6, 7			EX8	DGZ		CRANKSHAFT, Engine
2	5080 024AA	1	2, 3, 6, 7			EX8	DGZ		DOWEL
3	5073 998AA	1	2, 3, 6, 7			EX8	DGZ		KEY, Woodruff
4	5117 378AA	1	2, 3, 6, 7			EX8	DGZ		GEAR, Crankshaft
5	5103 972AB	1	2, 3, 6, 7			EX8	DGZ		DAMPER, Crankshaft
6	5073 696AA	1	2, 3, 6, 7			EX8	DGZ		SCREW, Vibration Dampner, Mounting
7	5080 005AA	1	2, 3, 6, 7			EX8	DGZ		WASHER, Vibration Dampner, Mounting
8	5137 274AA	1				EX8			FLEX PLATE
9	5104 567AA	1	2, 3, 6, 7			EX8	DGZ		CONVERTER, Torque
10	5080 014AA	1	2, 3, 6, 7			EX8	DGZ		O RING
11	5080 398AB	1	2, 3, 6, 7			EX8	DGZ		PLUG
12	6507 095AA	6	3, 7			EX8	DGZ		SCREW, [M8X1.25X18.00], Tourque Converter To Flexplate, Mounting
13	5080 066AA	1				EX8	DGZ		WASHER
14	5103 968AA	7	2, 3, 6, 7			EX8	DGZ		SCREW
15	5086 294AA	6	2, 3, 6, 7			EX8	DGZ		BEARING, Crankshaft, Main
16	5086 295AA	2	2, 3, 6, 7			EX8	DGZ		BEARING, Crankshaft
17	5175 613AA	5	2, 3, 6, 7			EX8	DGZ		ROD, Connecting
18	5175 614AA	5	2, 3, 6, 7			EX8	DGZ		BUSHING, Connecting Rod
19	5073 698AA	10	2, 3, 6, 7			EX8	DGZ		BOLT, Connecting Rod
20	5086 153AA	1	2, 3, 6, 7			EX8	DGZ		BEARING, Connecting Rod, STD.
21	5161 392AA	5	2, 3, 6, 7			EX8	DGZ		PISTON
22	5080 034AA	10	2, 3, 6, 7			EX8	DGZ		RING, Piston Pin
23	5138 004AA	5	2, 3, 6, 7			EX8	DGZ		RING KIT, Piston

Refer to Model Legend Information Bookmark

AR = Use as required - = Non illustrated part # = New this model year

March 3, 2006

« RETURN TO GROUP INDEX

Camshaft And Valves 2.7L Diesel [EX8]
Figure 2.7LD-HO-505

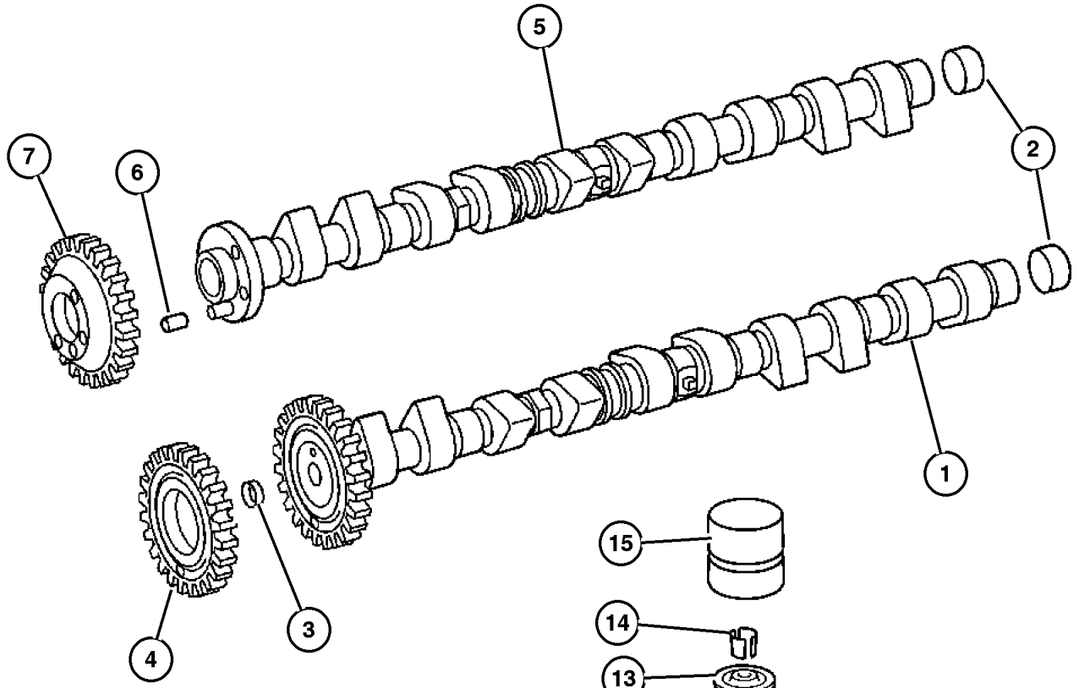

ITEM	PART NUMBER	QTY	LINE	SERIES	BODY	ENGINE	TRANS	TRIM	DESCRIPTION
NOTE:									
Sales Codes:									
[EX8] = 2.7L Inline 5 Cylinder Turbo Diesel Engine									
[NAS] = 50 State Emissions									
1	5117 371AA	1	2, 3, 6, 7			EX8	DGZ		CAMSHAFT, Intake
2	5080 071AA	1	2, 3, 6, 7			EX8	DGZ		PLUG, Expansion
3	5080 188AA	1	2, 3, 6, 7			EX8	DGZ		PLUG, Expansion, Intake
4	5080 110AA	1	2, 3, 6, 7			EX8	DGZ		GEAR, Camshaft, Intake
5	5080 095AA	1	2, 3, 6, 7			EX8	DGZ		CAMSHAFT, Exhaust
6	5080 096AA	1	2, 3, 6, 7			EX8	DGZ		PIN, Dowel
7	5073 814AA	1	2, 3, 6, 7			EX8	DGZ		GEAR, Camshaft, Exhaust
8	5117 399AA	10	2, 3, 6, 7			EX8	DGZ		VALVE, Intake, Standard
9	5117 402AA	10	2, 3, 6, 7			EX8	DGZ		VALVE, Engine Exhaust
10	5086 290AA	5	2, 3, 6, 7			EX8	DGZ		SEAL, Valve Guide, Parts Kit
11	5080 055AA	20	2, 3, 6, 7			EX8	DGZ		RETAINER, Valve Spring, Bottom
12	5117 403AA	10	2, 3, 6, 7			EX8	DGZ		SPRING, Valve
13	5080 052AA	20	2, 3, 6, 7			EX8	DGZ		RETAINER, Valve Spring, Top
14	5080 051AA	40	2, 3, 6, 7			EX8	DGZ		LOCK, Valve Spring Retainer
15	5080 060AB	20	2, 3, 6, 7			EX8	DGZ		TAPPET, Valve

Refer to Model Legend Information Bookmark

Timing Cover And Chain 2.7L Diesel [EX8]
Figure 2.7LD-HO-605

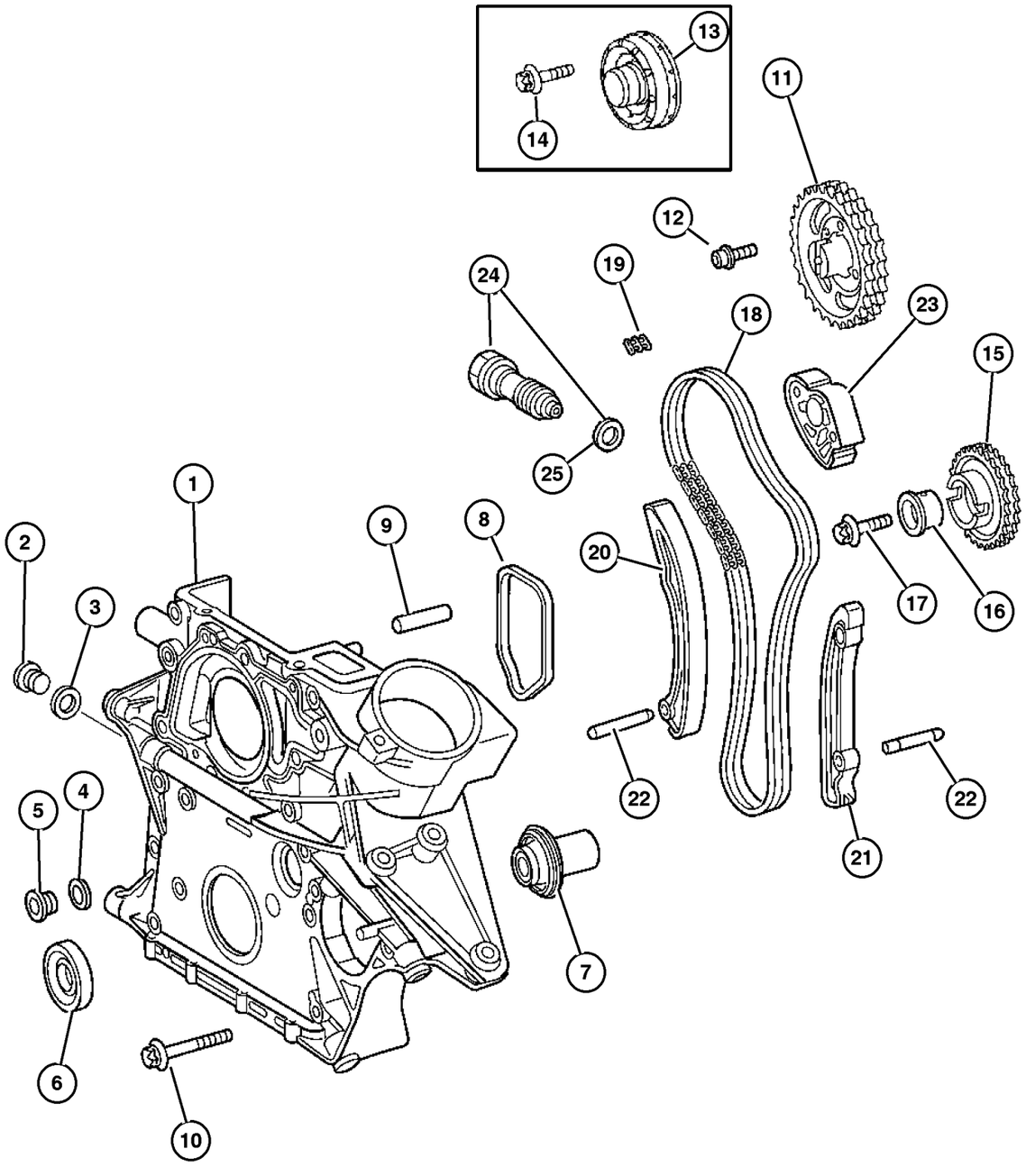

ITEM	PART NUMBER	QTY	LINE	SERIES	BODY	ENGINE	TRANS	TRIM	DESCRIPTION
NOTE:									
Sales Codes:									
[EX8] = 2.7L Inline 5 Cylinder Turbo Diesel Engine									
[NAS] = 50 State Emissions									
1	5103 969AA	1	2, 3, 6, 7			EX8	DGZ		COVER, Timing Case
2	5080 071AA	1	2, 3, 6, 7			EX8	DGZ		PLUG, Expansion
3	5080 015AA	1	2, 3, 6, 7			EX8	DGZ		O RING
4	5080 014AA	1	2, 3, 6, 7			EX8	DGZ		O RING
5	5080 398AB	1	2, 3, 6, 7			EX8	DGZ		PLUG
6	5073 675AB	1	2, 3, 6, 7			EX8	DGZ		OIL SEAL
7	5080 179AA	1	2, 3, 6, 7			EX8	DGZ		VALVE, Pressure Relief
8	5073 677AA	1	2, 3, 6, 7			EX8	DGZ		GASKET, Timing Cover
9	5073 936AA	1	2, 3, 6, 7			EX8	DGZ		DOWEL
10									SCREW
	5137 660AA	3	2, 3, 6, 7			EX8	DGZ		[M8x1.25x80.0] Timing Cover, Mounting
	6104 031AA	10	2, 3, 6, 7			EX8	DGZ		[M8x1.25x60.00] Timing Cover, Mounting
	6104 035AA	1	2, 3, 6, 7			EX8	DGZ		[M8x1.25x90.00] Timing Cover, Mounting
11	5080 110AA	1	2, 3, 6, 7			EX8	DGZ		GEAR, Camshaft
12	5073 901AA	3	2, 3, 6, 7			EX8	DGZ		SCREW, Camshaft Pulley, Mounting
13	5137 030AA	1	2, 3, 6, 7			EX8	DGZ		SEPERATOR, Oil, Camshaft
14	6104 684AA	5	2, 3, 6, 7			EX8	DGZ		SCREW, [M6.0X1.0X28.0], Oil Seperator, Mounting
15	5117 380AA	1	2, 3, 6, 7			EX8	DGZ		GEAR, Intermediate
16	5080 098AA	1	2, 3, 6, 7			EX8	DGZ		BEARING
17	5073 707AA	1	2, 3, 6, 7			EX8	DGZ		SCREW, Intermediate Gear, Mounting
18	5080 209AB	1	2, 3, 6, 7			EX8	DGZ		CHAIN, Timing
19	5086 196AA	1	2, 3, 6, 7			EX8	DGZ		LINK, Chain
20	5080 099AA	1	2, 3, 6, 7			EX8	DGZ		GUIDE, Timing Chain
21	5080 100AA	1	2, 3, 6, 7			EX8	DGZ		GUIDE, Timing Chain
22	5073 870AA	2	2, 3, 6, 7			EX8	DGZ		DOWEL
23	5080 101AA	1	2, 3, 6, 7			EX8	DGZ		GUIDE, Timing Chain
24	5174 768AA	1	2, 3, 6, 7			EX8	DGZ		TENSIONER, Chain
25	5125 905AA	1	2, 3, 6, 7			EX8	DGZ		O RING

Refer to Model Legend Information Bookmark

Vaccum Pump 2.7L Diesel [EX8]
Figure 2.7LD-HO-610

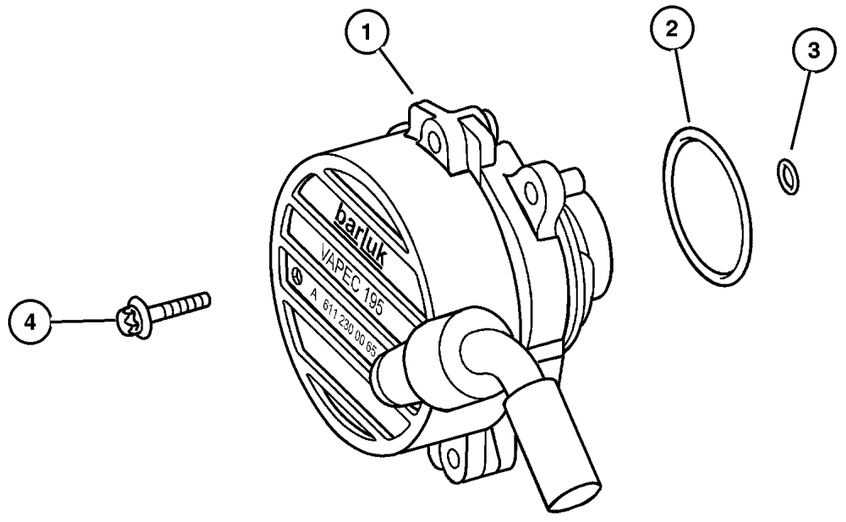

ITEM	PART NUMBER	QTY	LINE	SERIES	BODY	ENGINE	TRANS	TRIM	DESCRIPTION
NOTE:									
Sales Codes:									
[EX8] = 2.7L Inline 5 Cylinder Turbo Diesel Engine									
[NAS] = 50 State Emissions									
1	5117 675AA	1	2, 3, 6, 7			EX8	DGZ		PUMP, Vacuum
2	5080 334AA	1	2, 3, 6, 7			EX8	DGZ		O RING
3	5080 335AA	1	2, 3, 6, 7			EX8	DGZ		O RING
4	5073 702AA	2	2, 3, 6, 7			EX8	DGZ		SCREW, Vacuum Pump, Mounting

Refer to Model Legend Information Bookmark

AR = Use as required - = Non illustrated part # = New this model year

March 3, 2006

« RETURN TO GROUP INDEX

Oil Pump 2.7L Diesel [EX8]
Figure 2.7LD-HO-705

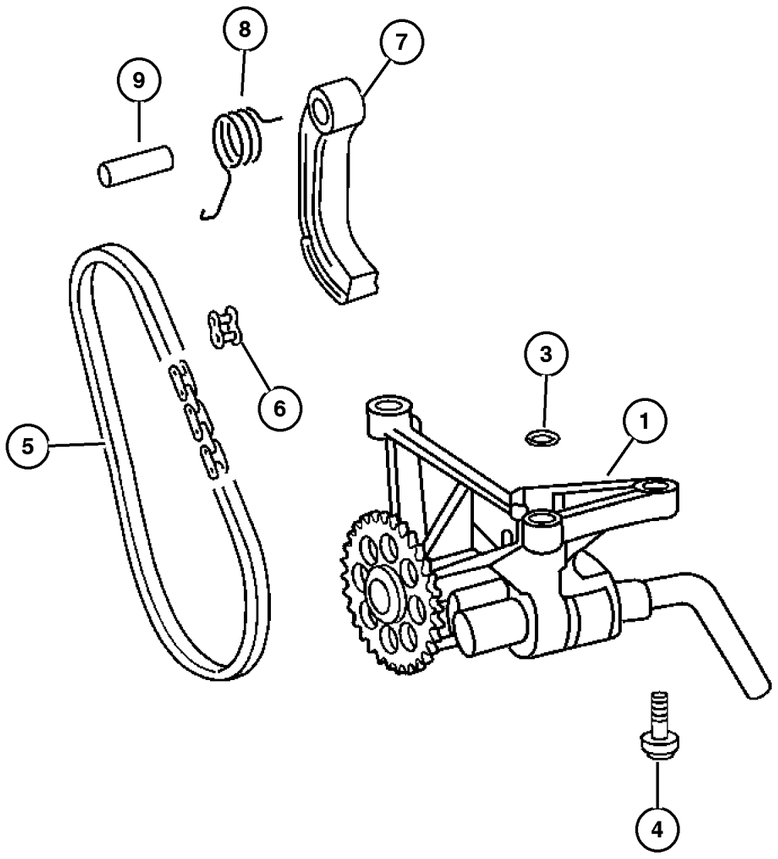

ITEM	PART NUMBER	QTY	LINE	SERIES	BODY	ENGINE	TRANS	TRIM	DESCRIPTION
NOTE:									
Sales Codes:									
[EX8] = 2.7L Inline 5 Cylinder Turbo Diesel Engine									
[NAS] = 50 State Emissions									
1	5117 594AA	1	2, 3, 6, 7			EX8	DGZ		PUMP, Engine Oil
-2	5080 119AA-	1	2, 3, 6, 7			EX8	DGZ		SNAP RING
3	5080 123AB	1	2, 3, 6, 7			EX8	DGZ		O RING
4	5073 710AA	3	2, 3, 6, 7			EX8	DGZ		SCREW, Oil Pump, Mounting
5	5080 128AA	1	2, 3, 6, 7			EX8	DGZ		CHAIN, Pump Drive
6	5080 129AA	1	2, 3, 6, 7			EX8	DGZ		LINK, Chain
7	5080 121AA	1	2, 3, 6, 7			EX8	DGZ		ARM, Tensioner
8	5080 120AA	1	2, 3, 6, 7			EX8	DGZ		SPRING
9	5073 871AA	1	2, 3, 6, 7			EX8	DGZ		DOWEL

Refer to Model Legend Information Bookmark

Oil Cooler And Filter 2.7L Diesel [EX8]
Figure 2.7LD-HO-710

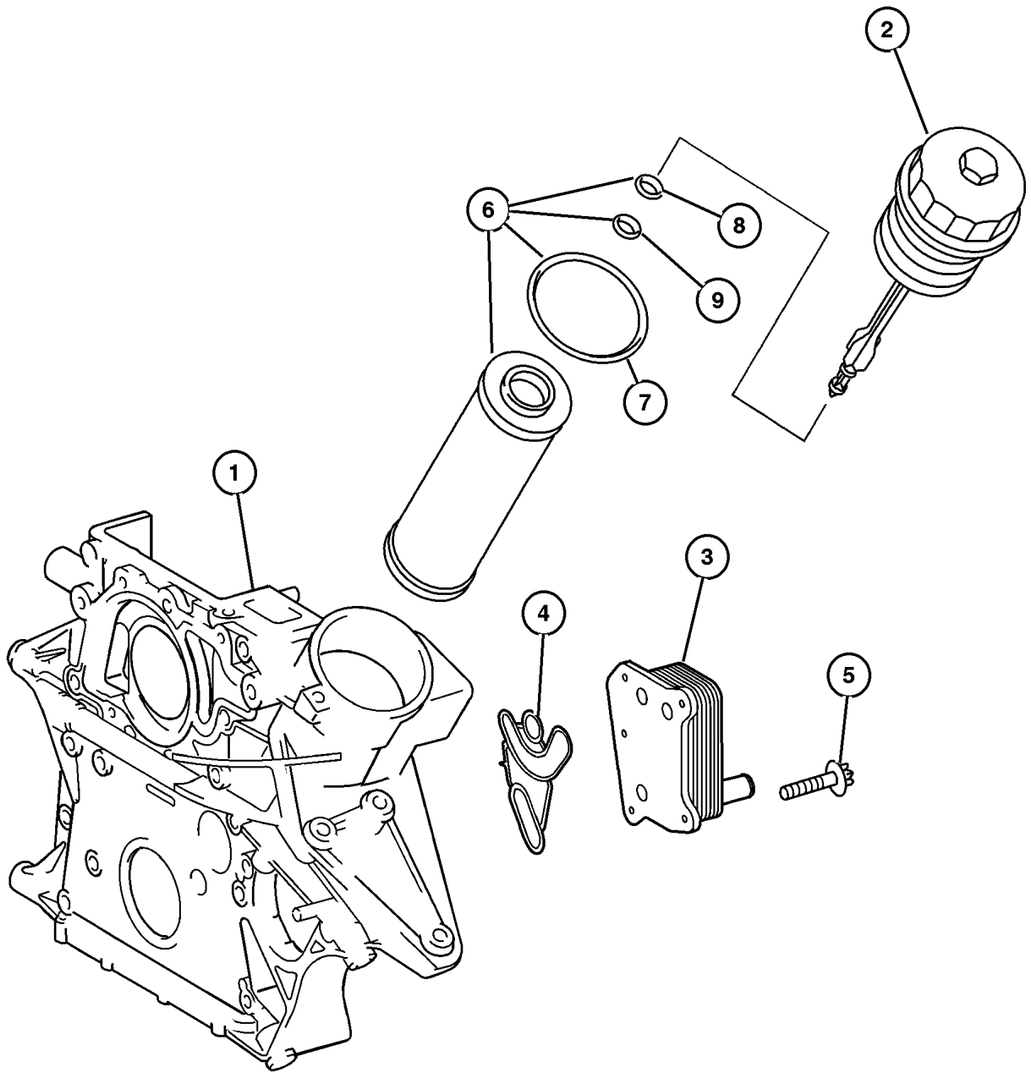

ITEM	PART NUMBER	QTY	LINE	SERIES	BODY	ENGINE	TRANS	TRIM	DESCRIPTION
NOTE:									
Sales Codes:									
[EX8] = 2.7L Inline 5 Cylinder Turbo Diesel Engine									
[NAS] = 50 State Emissions									
1	5103 969AA	1	2, 3, 6, 7			EX8	DGZ		COVER, Timing Case
2	5080 029AA	1	2, 3, 6, 7			EX8	DGZ		HEAD, Oil Filter
3	5080 402AA	1	2, 3, 6, 7			EX8	DGZ		COOLER, Oil
4	5080 141AA	1	2, 3, 6, 7			EX8	DGZ		GASKET, Oil Cooler
5	6104 144AA	3	2, 3, 6, 7			EX8	DGZ		SCREW, [M6X1.0X25.0], Oil Cooler, Mounting
6	5086 301AA	1	2, 3, 6, 7			EX8	DGJ		FILTER, Engine Oil
7	5080 242AA	1	2, 3, 6, 7			EX8	DGZ		O RING
8	5080 242AA	1	2, 3, 6, 7			EX8	DGZ		O RING
9	5086 297AA	1	2, 3, 6, 7			EX8	DGZ		O RING

Refer to Model Legend Information Bookmark

Oil Pan 2.7L Diesel [EX8]
Figure 2.7LD-HO-715

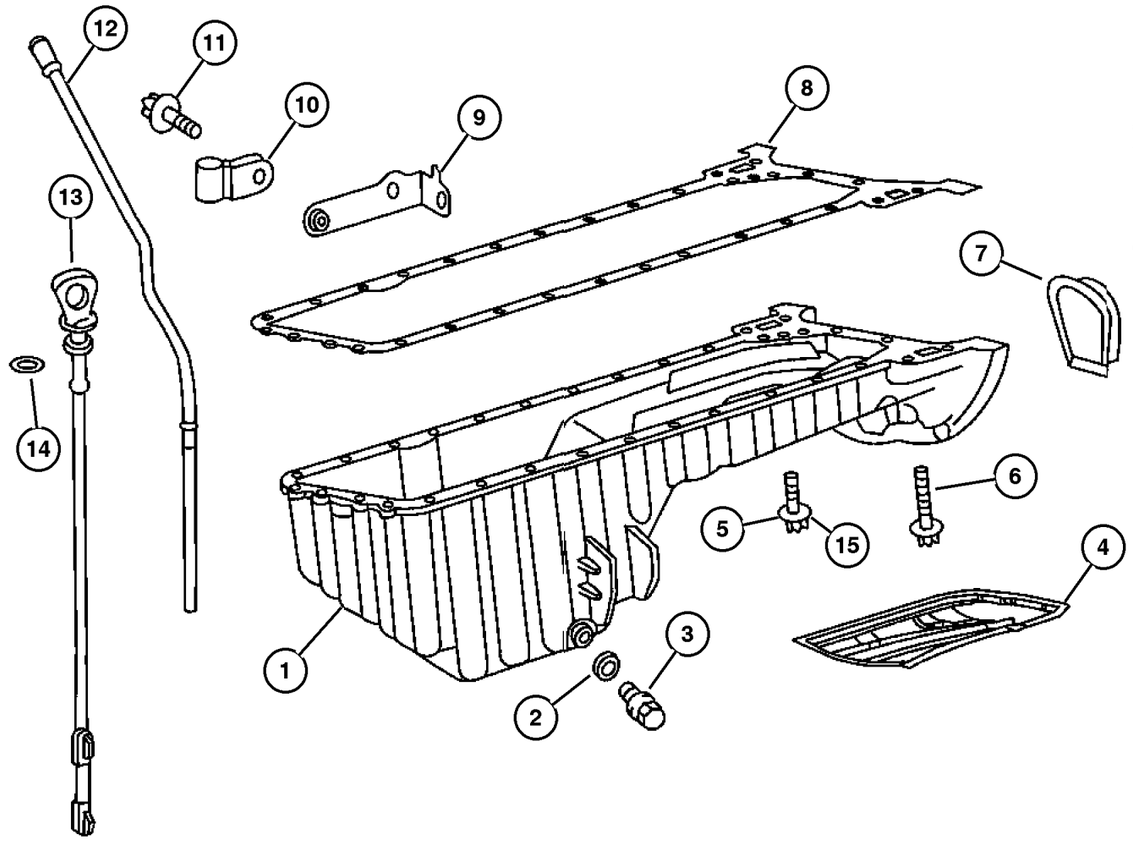

ITEM	PART NUMBER	QTY	LINE	SERIES	BODY	ENGINE	TRANS	TRIM	DESCRIPTION
NOTE:									
Sales Codes:									
[EX8] = 2.7L Inline 5 Cylinder Turbo Diesel Engine									
[NAS] = 50 State Emissions									
1	5117 152AA	1	2, 3, 6, 7			EX8	DGZ		PAN, Oil
2	5073 946AA	1	2, 3, 6, 7			EX8	DGZ		GASKET, Drain Plug
3	5073 945AA	1	2, 3, 6, 7			EX8	DGZ		PLUG, Oil Drain
4	5117 250AA	1	2, 3, 6, 7			EX8	DGZ		PAN, Oil, Windage Tray
5	5126 198AA	4	3, 7			EX8	DGZ		BOLT, M6x20, Mounting
6									BOLT
	6104 006AA	18	2, 3, 6, 7			EX8	DGZ		Oil Pan [M6X1.00X20.00], Mounting
	6104 029AA	2	2, 3, 6, 7			EX8	DGZ		Oil Pan [M8X1.25X50.00], Mounting
7	5103 911AA	1	2, 3, 6, 7			EX8	DGZ		COVER
8	5175 310AA	1	2, 3, 6, 7			EX8	DGZ		GASKET, Oil Pan
9	5117 308AA	1	2, 3, 6, 7			EX8	DGZ		BRACKET
10	5073 938AB	1	2, 3, 6, 7			EX8	DGZ		CLAMP, Tube Retaining
11	5135 828AA	1	2, 3, 6, 7			EX8	DGZ		SCREW, Oil Indicator Tube, Mounting
12	5117 302AA	1	2, 3, 6, 7			EX8	DGZ		TUBE, Engine Oil Indicator
13	5103 962AA	1	2, 3, 6, 7			EX8	DGZ		INDICATOR, Engine Oil Level
14	5073 943AA	1	2, 3, 6, 7			EX8	DGZ		O RING, Engine Oil Level Tube
15	5073 692AA	2	2, 3, 6, 7			EX8	DGZ		SCREW

Refer to Model Legend Information Bookmark

Turbo, Oil Feed And Return Lines 2.7L Diesel [EX8]
Figure 2.7LD-HO-720

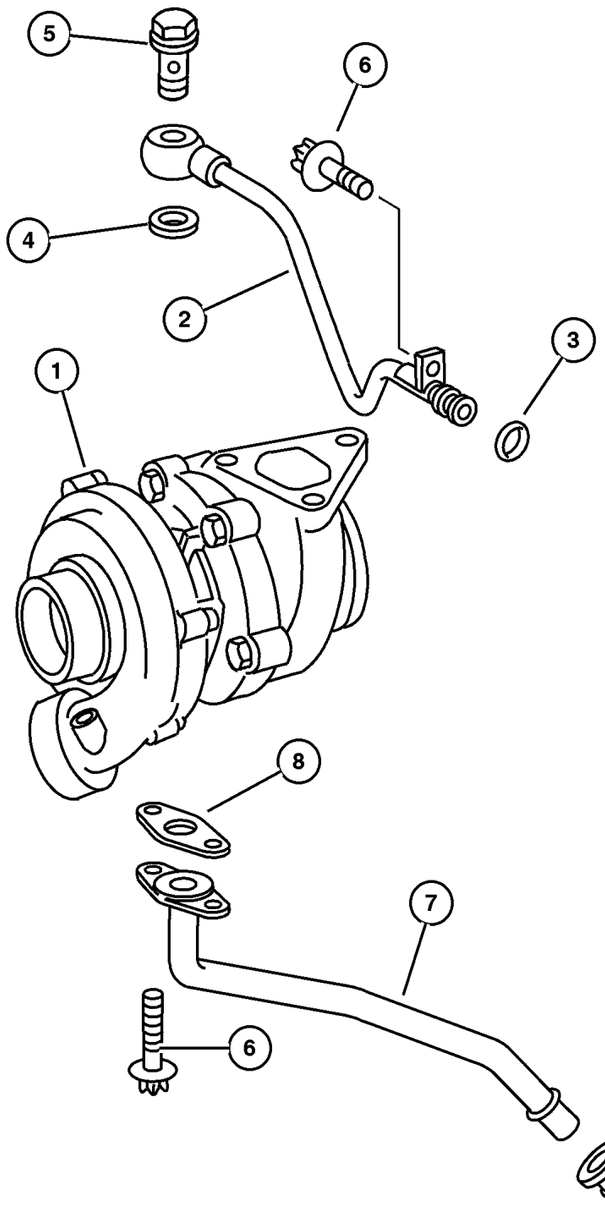

ITEM	PART NUMBER	QTY	LINE	SERIES	BODY	ENGINE	TRANS	TRIM	DESCRIPTION
NOTE:									
Sales Codes:									
[EX8] = 2.7L Inline 5 Cylinder Turbo Diesel Engine									
[NAS] = 50 State Emissions									
1	5142 494AA	1	2, 3, 6, 7			EX8	DGZ		TURBOCHARGER
2	5103 984AA	1	2, 3, 6, 7			EX8	DGZ		TUBE, Turbo Oil Feed
3	5080 135AA	1	2, 3, 6, 7			EX8	DGZ		O RING
4	5080 136AB	2	2, 3, 6, 7			EX8	DGZ		O RING
5	5080 137AA	1	2, 3, 6, 7			EX8	DGZ		SCREW, Oil Line, Mounting
6	6104 005AA	2	2, 3, 6, 7			EX8	DGZ		SCREW, [M6X1.00X16.00], Oil Line, Mounting
7	5103 983AA	1	2, 3, 6, 7			EX8	DGZ		TUBE, Turbo Oil Return
8	5117 624AA	1	2, 3, 6, 7			EX8	DGZ		GASKET, Turbo Oil Return Pipe
9	5080 140AB	1	2, 3, 6, 7			EX8	DGZ		GASKET, Turbo Oil Return Pipe

Refer to Model Legend Information Bookmark

Intake Manifold 2.7L Diesel [EX8]
Figure 2.7LD-HO-805

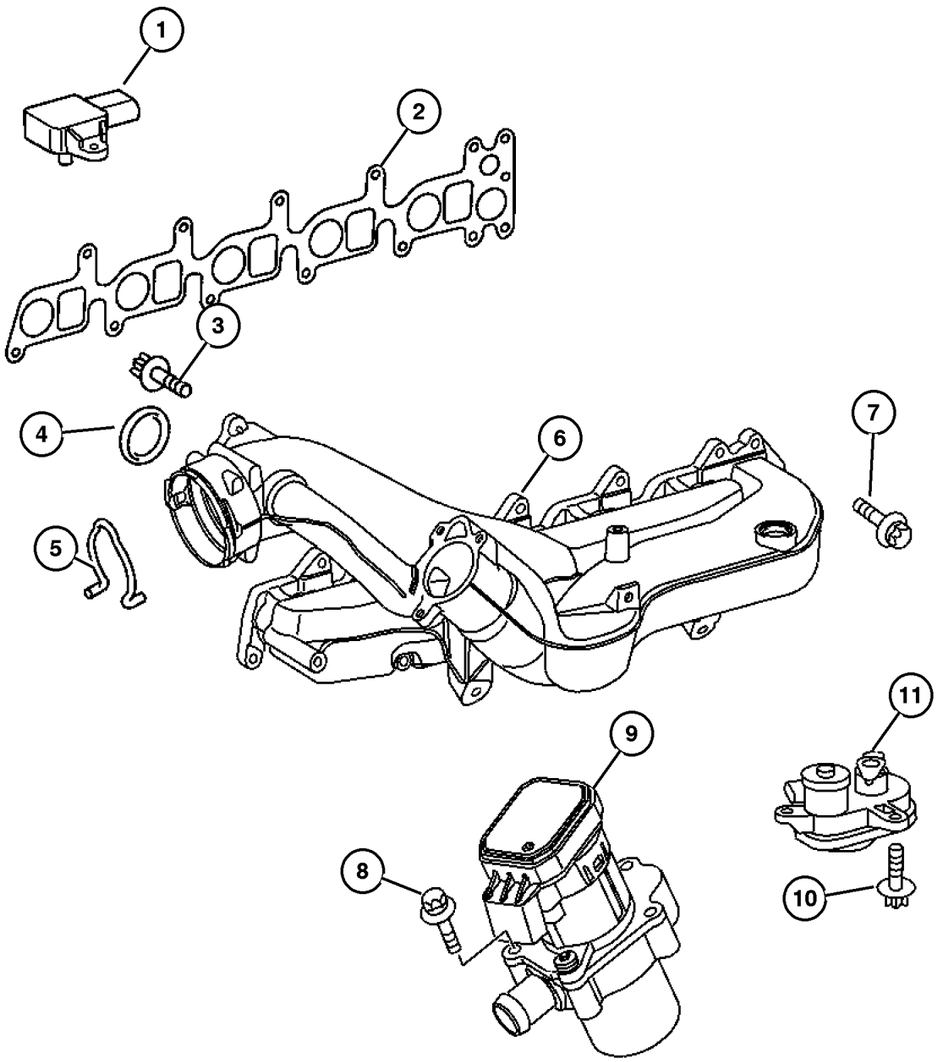

ITEM	PART NUMBER	QTY	LINE	SERIES	BODY	ENGINE	TRANS	TRIM	DESCRIPTION
NOTE:									
Sales Codes:									
[EX8] = 2.7L Inline 5 Cylinder Turbo Diesel Engine									
[NAS] = 50 State Emissions									
1									SENSOR, Coolant Level
	5120 509AA	1	2, 6			EX8	DGZ		
		1	3, 7			EX8	DGZ		
2	5080 324AA	1	2, 3, 6, 7			EX8	DGZ		GASKET, Intake Manifold
3	6104 005AA	2	2, 3, 6, 7			EX8	DGZ		SCREW, [M6X1.00X16.00], Intake Manifold, Mounting
4	5137 197AA	1	2, 3, 6, 7			EX8	DGZ		GASKET, EGR Valve
5	5136 770AA	1	2, 3, 6, 7			EX8	DGZ		SPRING
6	5136 769AA	1	2, 3, 6, 7			EX8	DGZ		MANIFOLD, Intake
7	5073 903AA	8	2, 3, 6, 7			EX8	DGZ		SCREW, Intake Manifold, Mounting
8	6104 008AA	8	2, 3, 6, 7			EX8	DGZ		SCREW, [M6X1.00X30.00], Mounting
9	5166 850AA	1	2, 3, 6, 7			EX8	DGZ		VALVE, EGR
10	6104 005AA	2	2, 3, 6, 7			EX8	DGZ		SCREW, [M6X1.00X16.00], Mounting
11	5135 893AA	1	2, 3, 6, 7			EX8	DGZ		MOTOR, Air Idle Speed

Refer to Model Legend Information Bookmark

Exhaust Manifold 2.7L Diesel [EX8]
Figure 2.7LD-HO-810

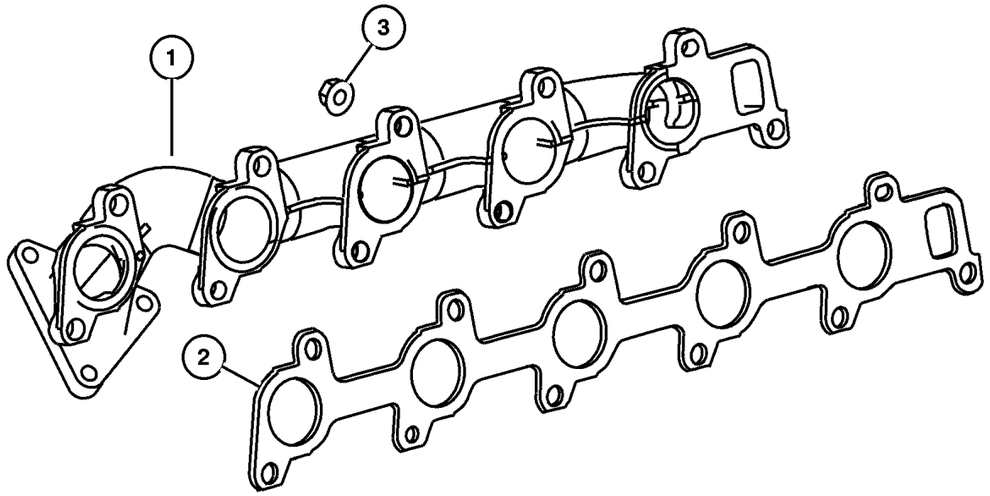

ITEM	PART NUMBER	QTY	LINE	SERIES	BODY	ENGINE	TRANS	TRIM	DESCRIPTION
NOTE:									
Sales Codes:									
[EX8] = 2.7L Inline 5 Cylinder Turbo Diesel Engine									
[NAS] = 50 State Emissions									
1	5117 523AA	1	2, 3, 6, 7			EX8	DGZ		MANIFOLD, Exhaust
2	5117 528AA	1	2, 3, 6, 7			EX8	DGZ		GASKET, Exhaust Manifold
3	6104 729AA	11	2, 3, 6, 7			EX8	DGZ		NUT, [M8X1.25], Exhaust Manifold, Mounting

Refer to Model Legend Information Bookmark

Crankcase Ventilation 2.7L Diesel [EX8]
Figure 2.7LD-HO-905

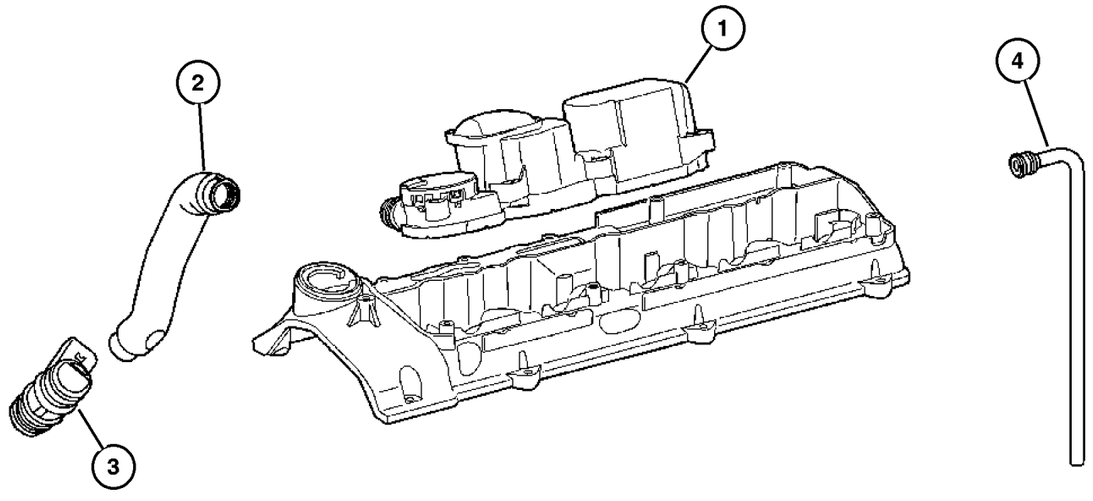

ITEM	PART NUMBER	QTY	LINE	SERIES	BODY	ENGINE	TRANS	TRIM	DESCRIPTION
NOTE:									
Sales Codes:									
[EX8] = 2.7L Inline 5 Cylinder Turbo Diesel Engine									
[NAS] = 50 State Emissions									
1	5137 030AA	1	2, 3, 6, 7			EX8	DGZ		SEPERATOR, Oil
2	5117 234AB	1	2, 3, 6, 7			EX8	DGZ		HOSE, Air Induction
3	5117 289AA	1	2, 3, 6, 7			EX8	DGZ		TUBE, Crankcase Vent Valve
4	5117 291AA	1	2, 3, 6, 7			EX8	DGZ		HOSE

Refer to Model Legend Information Bookmark

Group – 011
Exhaust

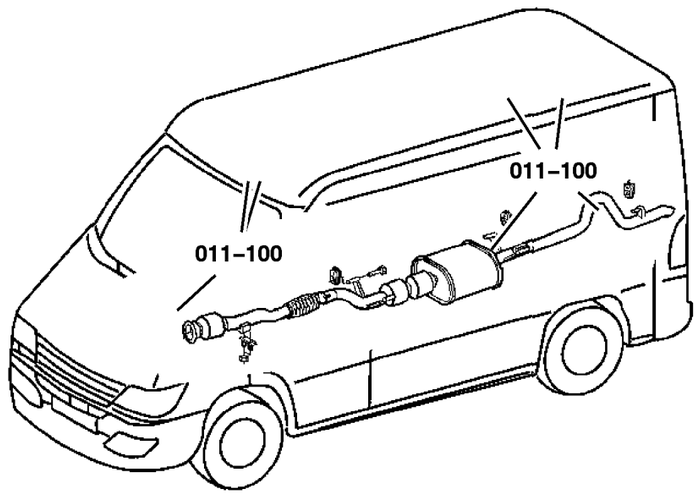

011–100 Exhaust System	011–200 Heat Shields		
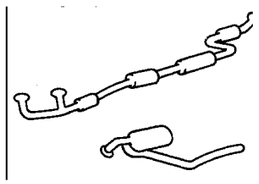	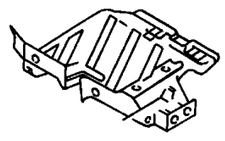		

GROUP 11 - Exhaust

Illustration Title	Group-Fig. No.
Exhaust System	
Exhaust System	Fig. 011-110
Heat Shields	
Heat Shields Exhaust	Fig. 011-210

Exhaust System
Figure 011-110

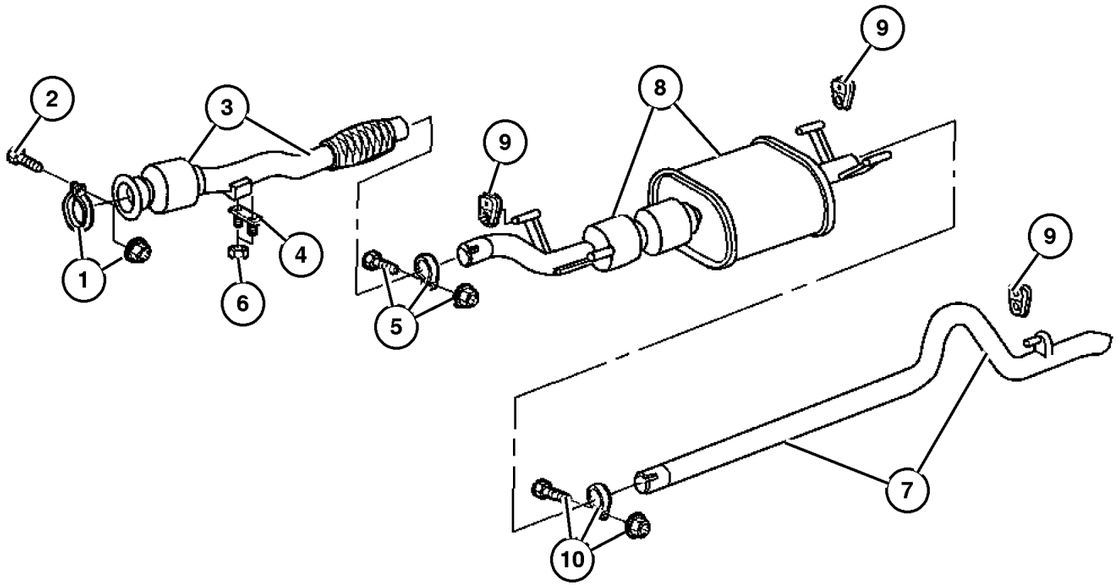

ITEM	PART NUMBER	QTY	LINE	SERIES	BODY	ENGINE	TRANS	TRIM	DESCRIPTION
Note; Sales Codes;									
[EX8] = 2.7L I5 Turbo Diesel Engine									
[5AC] = 118 Inch Wheel Base									
[5AE] = 140 Inch Wheel Base									
[5AF] = 158 Inch Wheel Base									
1									CLAMP, Exhaust, (NOT SERVICED) (Not Serviced)
2									SCREW
	6104 027AA	1	2, 6	L	01, 02, 06	EX8	DGZ		
		1	2, 6	L	11, 12, 14, 15, 16	EX8	DGZ		
		1	2, 6	L	51, 52, 54, 55, 56	EX8	DGZ		
		1	3, 7	L	02, 06	EX8	DGZ		
		1	3, 7	L	12, 15, 16	EX8	DGZ		
3	5136 635AA	1	2, 6	L	06	EX8	DGZ		PIPE, Exhaust
4									BRACKET, Exhaust
	5119 943AA	1	2, 6	L	01, 02, 06	EX8	DGZ		
		1	2, 6	L	11, 12, 14, 15, 16	EX8	DGZ		
		1	2, 6	L	51, 52, 54, 55, 56	EX8	DGZ		
		1	3, 7	L	02, 06	EX8	DGZ		
		1	3, 7	L	12, 15, 16	EX8	DGZ		
5									CLAMP, Exhaust
	5127 230AA	1	2, 6	L	01, 02, 06	EX8	DGZ		
		1	2, 6	L	11, 12, 14, 15, 16	EX8	DGZ		
		1	2, 6	L	51, 52, 54, 55, 56	EX8	DGZ		
		1	3, 7	L	02, 06	EX8	DGZ		
		1	3, 7	L	12, 15, 16	EX8	DGZ		
6									NUT, Catalytic Converter Mounting

Refer to Model Legend Information Bookmark

Exhaust System
Figure 011-110

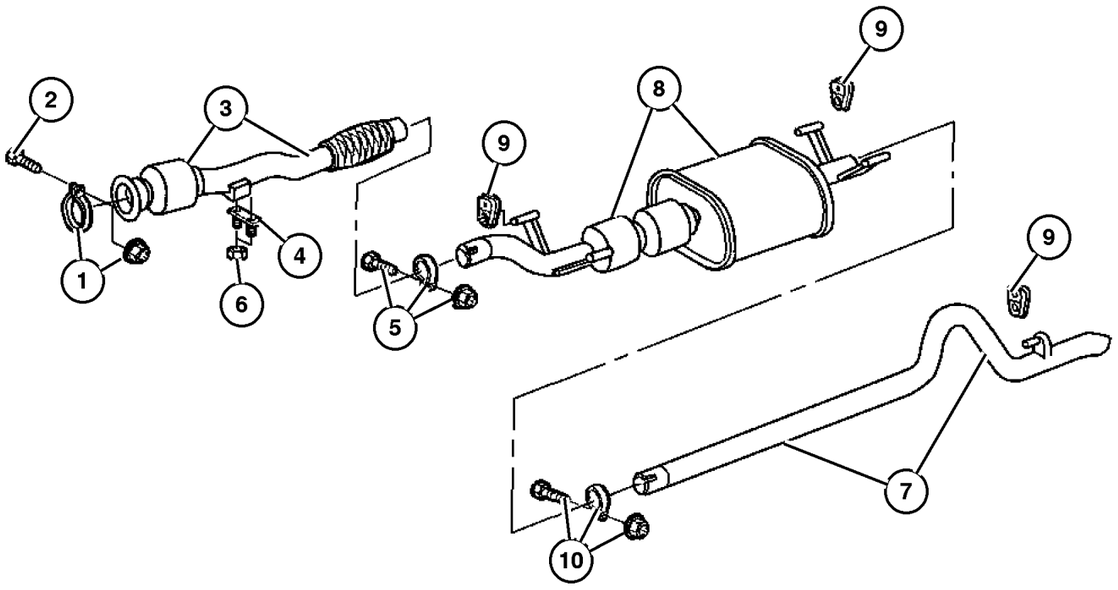

ITEM	PART NUMBER	QTY	LINE	SERIES	BODY	ENGINE	TRANS	TRIM	DESCRIPTION
	5101 226AA	2	2, 6	L	01, 02, 06	EX8	DGZ		
		2	2, 6	L	11, 12, 14, 15, 16	EX8	DGZ		
		2	2, 6	L	51, 52, 54, 55, 56	EX8	DGZ		
		2	3, 7	L	02, 06	EX8	DGZ		
		2	3, 7	L	12, 15, 16	EX8	DGZ		
7									PIPE, Tail
	5104 107AA	1	2, 6	L	02	EX8	DGZ		
		1	2, 6	L	12, 15	EX8	DGZ		
		1	2, 6	L	52, 55	EX8	DGZ		
	5104 108AA	1	2, 6	L	16	EX8	DGZ		
		1	2, 6	L	56	EX8	DGZ		
	5119 778AA	1	2, 6	L	01	EX8	DGZ		
		1	2, 6	L	11, 14	EX8	DGZ		
		1	2, 6	L	51, 54	EX8	DGZ		
	5119 791AA	1	3, 7	L	02	EX8	DGZ		
		1	3, 7	L	12, 15	EX8	DGZ		
8									MUFFLER, Exhaust
	5119 762AA	1	2, 6	L	01, 02, 06	EX8	DGZ		
		1	2, 6	L	11, 12, 14, 15, 16	EX8	DGZ		
		1	2, 6	L	51, 52, 54, 55, 56	EX8	DGZ		
		1	3, 7	L	02, 06	EX8	DGZ		
		1	3, 7	L	12, 15, 16	EX8	DGZ		
9									INSULATOR, Exhaust
	5104 109AA	4	2, 6	L	01, 02, 06	EX8	DGZ		
		4	2, 6	L	11, 12, 14, 15, 16	EX8	DGZ		
		4	2, 6	L	51, 52, 54, 55, 56	EX8	DGZ		
		1	3, 7	L	02, 06	EX8	DGZ		

Refer to Model Legend Information Bookmark

AR = Use as required - = Non illustrated part # = New this model year

March 3, 2006

« RETURN TO GROUP INDEX

« »

Exhaust System
Figure 011-110

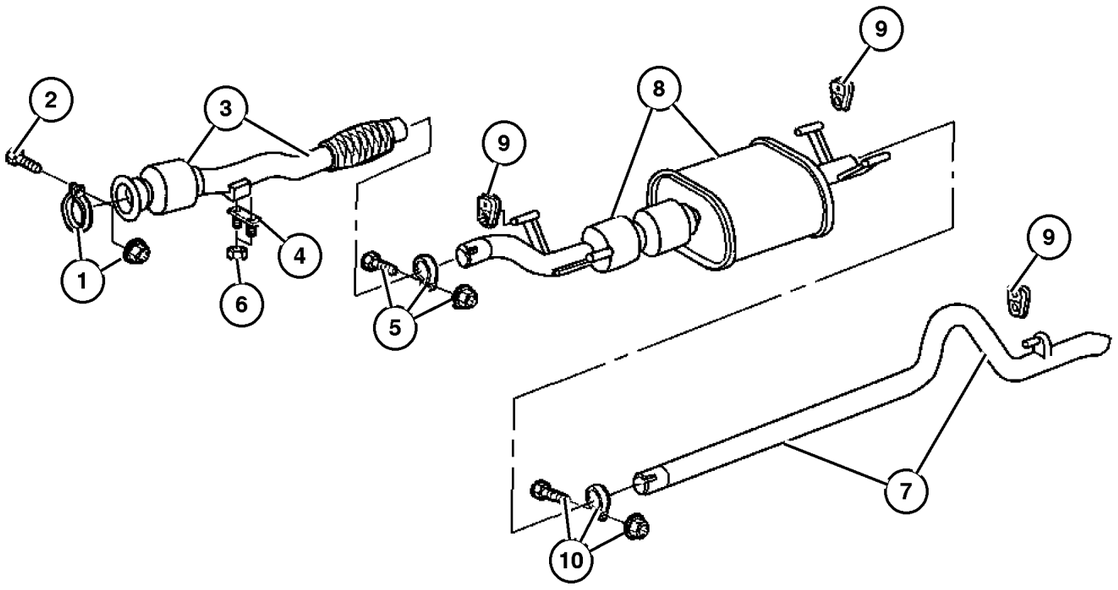

ITEM	PART NUMBER	QTY	LINE	SERIES	BODY	ENGINE	TRANS	TRIM	DESCRIPTION
		4	3, 7	L	12, 15, 16	EX8	DGZ		
10	5127 230AA	1	2, 6	L	01, 02, 06	EX8	DGZ		CLAMP, Exhaust
		1	2, 6	L	11, 12, 14, 15, 16	EX8	DGZ		
		1	2, 6	L	51, 52, 54, 55, 56	EX8	DGZ		
		1	3, 7	L	02, 06	EX8	DGZ		
		1	3, 7	L	12, 15, 16	EX8	DGZ		
-11	5119 807AA-	1	2, 6	L	01, 02, 06	EX8	DGZ		BRACKET, Exhaust
		1	2, 6	L	11, 12, 14, 15, 16	EX8	DGZ		
		1	2, 6	L	51, 52, 54, 55, 56	EX8	DGZ		
	5119 931AA-	1	2, 6	L	01	EX8	DGZ		
		1	3, 7	L	12, 15, 16	EX8	DGZ		
-12	5119 943AA-	1	3, 7	L	02, 06	EX8	DGZ		SEAL, Exhaust
	5135 684AA-	1	2, 6	L	01, 02, 06	EX8	DGZ		
		1	2, 6	L	11, 12, 14, 15, 16	EX8	DGZ		
		1	2, 6	L	51, 52, 54, 55, 56	EX8	DGZ		
		1	3, 7	L	02, 06	EX8	DGZ		
		1	3, 7	L	12, 15, 16	EX8	DGZ		

Refer to Model Legend Information Bookmark

AR = Use as required - = Non illustrated part # = New this model year

March 3, 2006

« RETURN TO GROUP INDEX

«

Heat Shields Exhaust
Figure 011-210

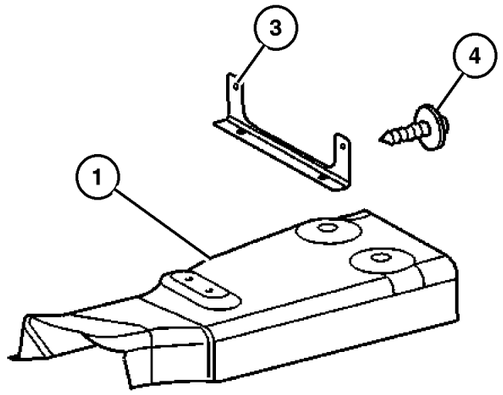

ITEM	PART NUMBER	QTY	LINE	SERIES	BODY	ENGINE	TRANS	TRIM	DESCRIPTION
Sales Codes:EX8=2.7L I5 MERCEDES-BENZ									
DGJ=TRANSMISSION - 5-SPD AUTO									
1									SHIELD, Heat
	5135 681AA	1	2, 6	L	01, 02, 06	EX8	DGZ		
		1	2, 6	L	11, 12, 14, 15, 16	EX8	DGZ		
		1	2, 6	L	51, 52, 54, 55, 56	EX8	DGZ		
		1	3, 7	L	02, 06	EX8	DGZ		
		1	3, 7	L	12, 15, 16	EX8	DGZ		
-2									SCREW, Exhaust Bracket Mounting, Shield Mounting
	5125 748AA-	3	2, 6	L	01, 02, 06	EX8	DGZ		
		4	2, 6	L	11, 12, 14, 15, 16	EX8	DGZ		
		4	2, 6	L	51, 52, 54, 55, 56	EX8	DGZ		
		3	3, 7	L	02, 06	EX8	DGZ		
		4	3, 7	L	12, 15, 16	EX8	DGZ		
3									BRACKET, Exhaust
	5119 848AA	1	2, 6	L	01, 02, 06	EX8	DGZ		
		1	2, 6	L	11, 12, 14, 15, 16	EX8	DGZ		
		1	2, 6	L	51, 52, 54, 55, 56	EX8	DGZ		
		1	3, 7	L	02, 06	EX8	DGZ		
		1	3, 7	L	12, 15, 16	EX8	DGZ		
4									SCREW, Exhaust Bracket Mounting
	5125 748AA	4	2, 6	L	01, 02, 06	EX8	DGZ		
		4	2, 6	L	11, 12, 14, 15, 16	EX8	DGZ		

Refer to Model Legend Information Bookmark

Heat Shields Exhaust
Figure 011-210

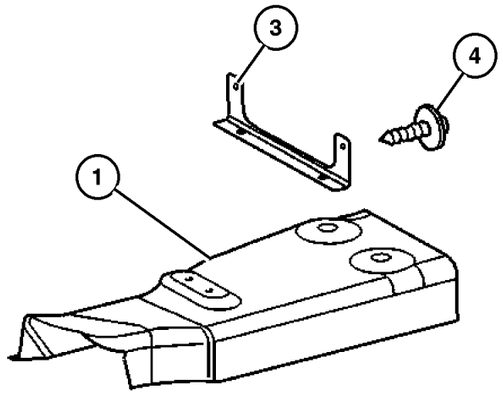

ITEM	PART NUMBER	QTY	LINE	SERIES	BODY	ENGINE	TRANS	TRIM	DESCRIPTION
		4	2, 6	L	51, 52, 54, 55, 56	EX8	DGZ		
		3	3, 7	L	02, 06	EX8	DGZ		
		4	3, 7	L	12, 15, 16	EX8	DGZ		

Refer to Model Legend Information Bookmark

AR = Use as required - = Non illustrated part # = New this model year

March 3, 2006

« RETURN TO GROUP INDEX

«

Group – 013
Frames and Bumpers

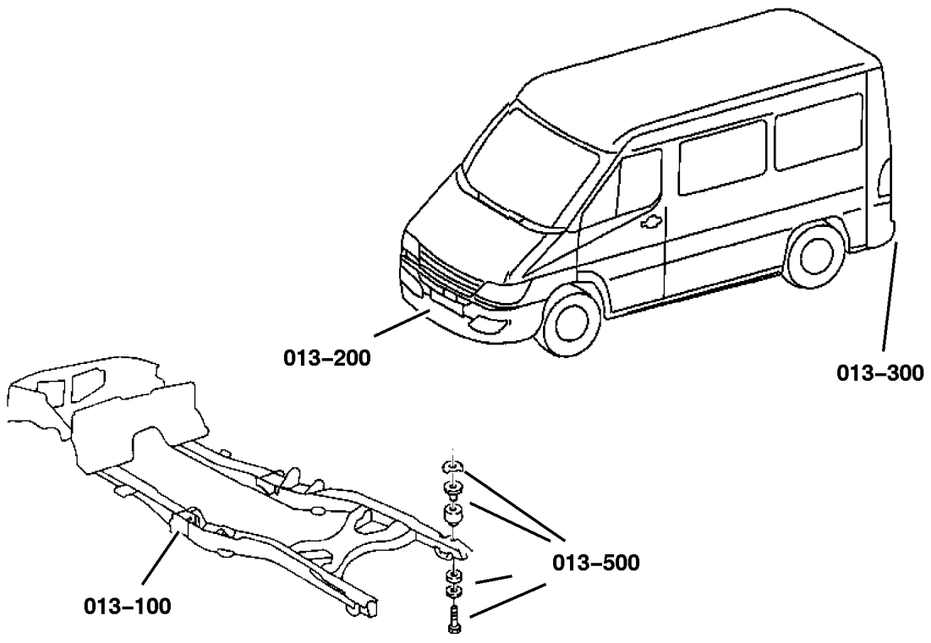

013–100 Frames	013–200 Front Bumper and Fascia	013–300 Rear Bumper and Fascia	013–600 Trailer Tow
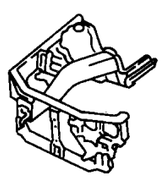	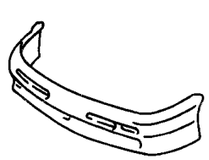	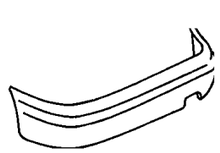	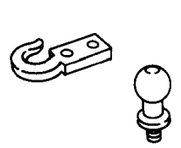

GROUP 13 - Frames and Bumpers

Illustration Title	Group-Fig. No.
Frames	
Front Frame Rails	Fig. 013-105
Side Frame Rails and Crossmembers 2500	Fig. 013-110
Side Frame Rails and Crossmembers 3500	Fig. 013-120
Brackets, Frame To Body Supports	Fig. 013-130
Front Bumper and Fascia	
Bumper, Front	Fig. 013-230
Rear Bumper and Fascia	
Bumper, Rear	Fig. 013-320
Trailer Tow	
Rear Hitch	Fig. 013-610
Trailer Tow	Fig. 013-620

Front Frame Rails
Figure 013-105

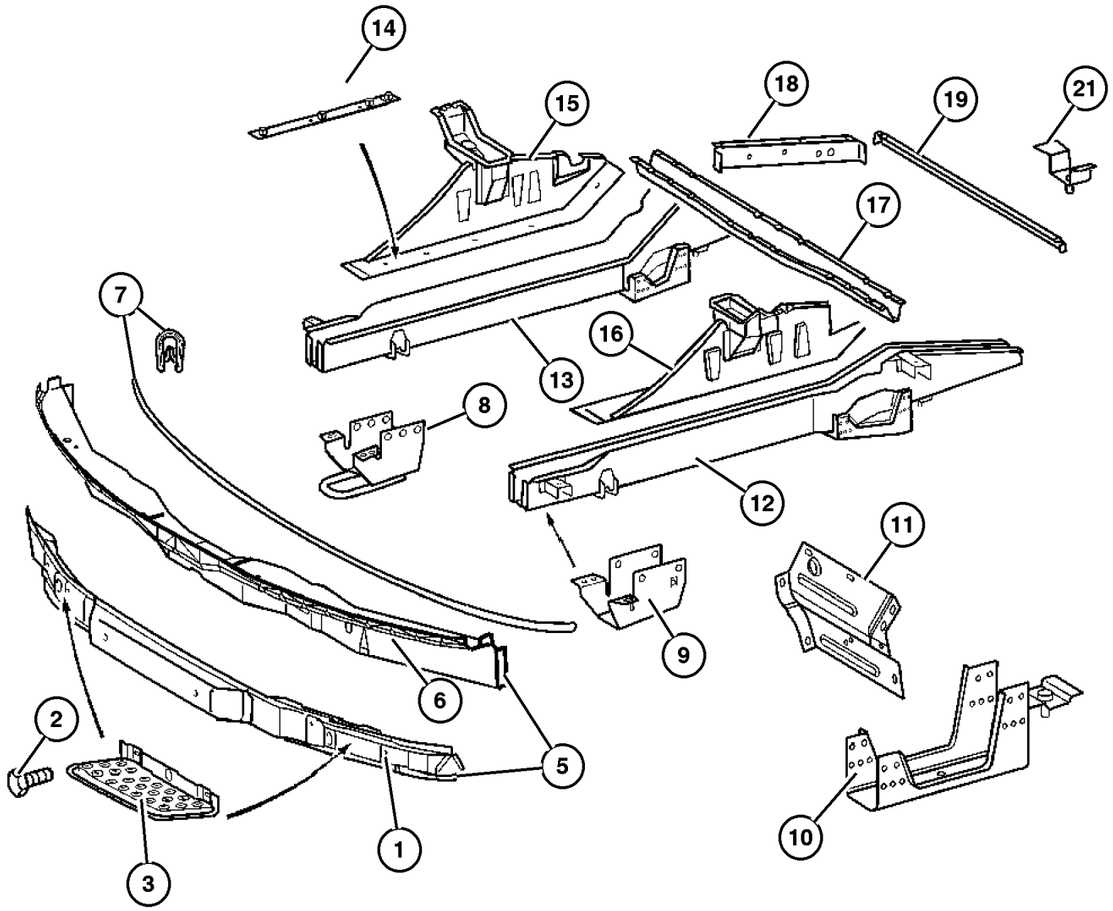

ITEM	PART NUMBER	QTY	LINE	SERIES	BODY	ENGINE	TRANS	TRIM	DESCRIPTION
1									COVER, Crossmember
	5133 848AA	1	2, 6	L	01, 02, 06				
		1	2, 6	L	11, 12, 14, 15, 16				
		1	2, 6	L	51, 52, 54, 55, 56				
		1	3, 7	L	02, 06				
		1	3, 7	L	12, 15, 16				
2									SCREW
	5073 723AB	2	2, 6	L	01, 02, 06				
		2	2, 6	L	11, 12, 14, 15, 16				
		2	2, 6	L	51, 52, 54, 55, 56				
		2	3, 7	L	02, 06				
		2	3, 7	L	12, 15, 16				
3									STEP, Left Side
	5104 136AA	1	2, 6	L	01, 02, 06				
		1	2, 6	L	11, 12, 14, 15, 16				
		1	2, 6	L	51, 52, 54, 55, 56				
		1	3, 7	L	02, 06				
		1	3, 7	L	12, 15, 16				
-4									STEP, Right Side
	5104 137AA-	1	2, 6	L	01, 02, 06				
		1	2, 6	L	11, 12, 14, 15, 16				
		1	2, 6	L	51, 52, 54, 55, 56				

Refer to Model Legend Information Bookmark

AR = Use as required - = Non illustrated part # = New this model year

March 3, 2006

« RETURN TO GROUP INDEX

»

Front Frame Rails
Figure 013-105

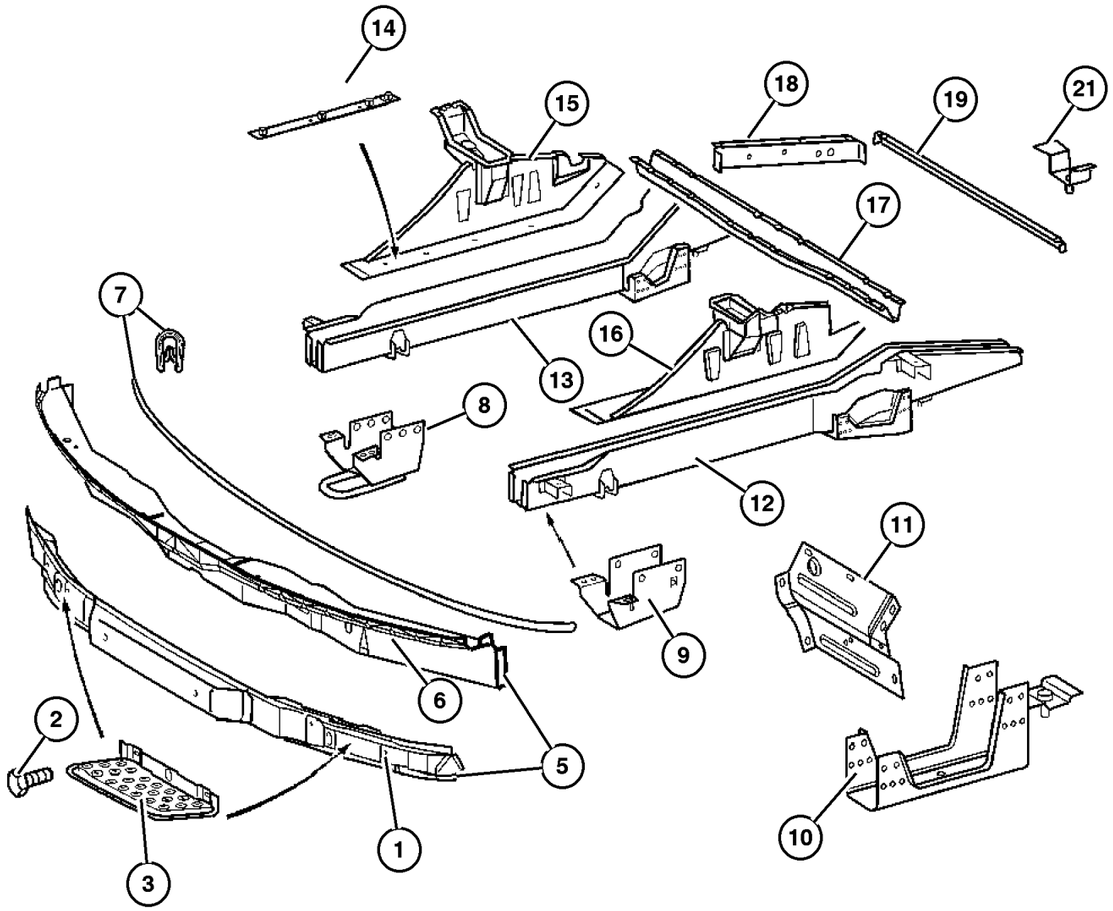

ITEM	PART NUMBER	QTY	LINE	SERIES	BODY	ENGINE	TRANS	TRIM	DESCRIPTION
		1	3, 7	L	02, 06				
		1	3, 7	L	12, 15, 16				
5									REINFORCEMENT, Front Bumper
	5104 054AA	1	2, 6	L	01, 02, 06				
		1	2, 6	L	11, 12, 14, 15, 16				
		1	2, 6	L	51, 52, 54, 55, 56				
		1	3, 7	L	02, 06				
		1	3, 7	L	12, 15, 16				
6									REINFORCEMENT, Front Bumper
	5104 054AA	1	2, 6	L	01, 02, 06				
		1	2, 6	L	11, 12, 14, 15, 16				
		1	2, 6	L	51, 52, 54, 55, 56				
		1	3, 7	L	02, 06				
		1	3, 7	L	12, 15, 16				
7									SEAL, Crossmember
	5123 544AA	1	2, 6	L	01, 02, 06				
		1	2, 6	L	11, 12, 14, 15, 16				
		1	2, 6	L	51, 52, 54, 55, 56				
		1	3, 7	L	02, 06				
		1	3, 7	L	12, 15, 16				
8									HOOK, Tow
	5104 053AA	1	2, 6	L	01, 02, 06				
		1	2, 6	L	11, 12, 14, 15, 16				

Refer to Model Legend Information Bookmark

AR = Use as required - = Non illustrated part # = New this model year

March 3, 2006

« RETURN TO GROUP INDEX

Front Frame Rails
Figure 013-105

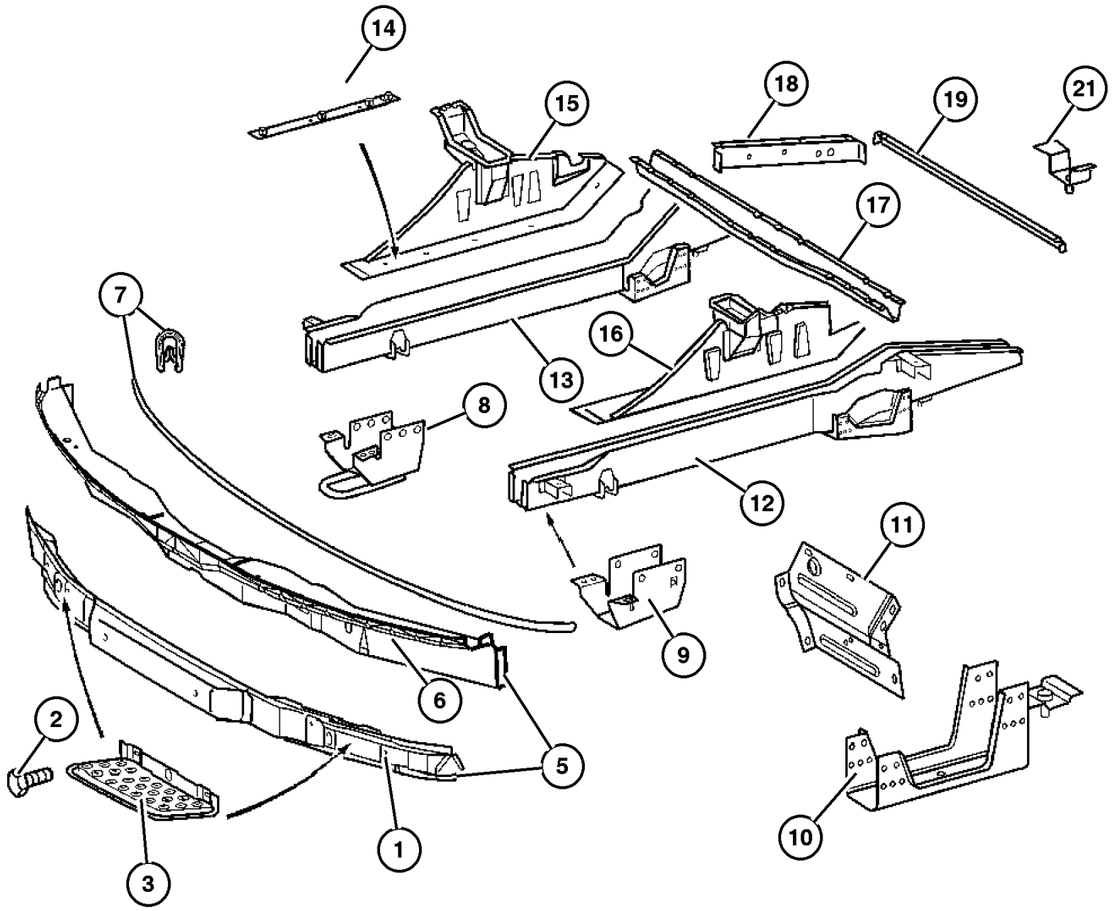

ITEM	PART NUMBER	QTY	LINE	SERIES	BODY	ENGINE	TRANS	TRIM	DESCRIPTION
		1	2, 6	L	51, 52, 54, 55, 56				
		1	3, 7	L	02, 06				
		1	3, 7	L	12, 15, 16				
9	5118 517AA	1	2, 6	L	01, 02, 06				BRACKET, Frame Rail
		1	2, 6	L	11, 12, 14, 15, 16				
		1	2, 6	L	51, 52, 54, 55, 56				
		1	3, 7	L	02, 06				
		1	3, 7	L	12, 15, 16				
10	5104 033AA	1	2, 6	L	01, 02, 06				REINFORCEMENT, Front Side Rail Right
		1	2, 6	L	11, 12, 14, 15, 16				Right
		1	2, 6	L	51, 52, 54, 55, 56				Right
		1	3, 7	L	02, 06				Right
		1	3, 7	L	12, 15, 16				Right
	5117 693AA	1	2, 6	L	01, 02, 06				Left
		1	2, 6	L	11, 12, 14, 15, 16				Left
		1	2, 6	L	51, 52, 54, 55, 56				Left
		1	3, 7	L	02, 06				Left
		1	3, 7	L	12, 15, 16				Left
11	5118 588AA	1	2, 6	L	01, 02, 06				REINFORCEMENT, Front Side Rail

Refer to Model Legend Information Bookmark

AR = Use as required - = Non illustrated part # = New this model year

March 3, 2006

« RETURN TO GROUP INDEX

Front Frame Rails
Figure 013-105

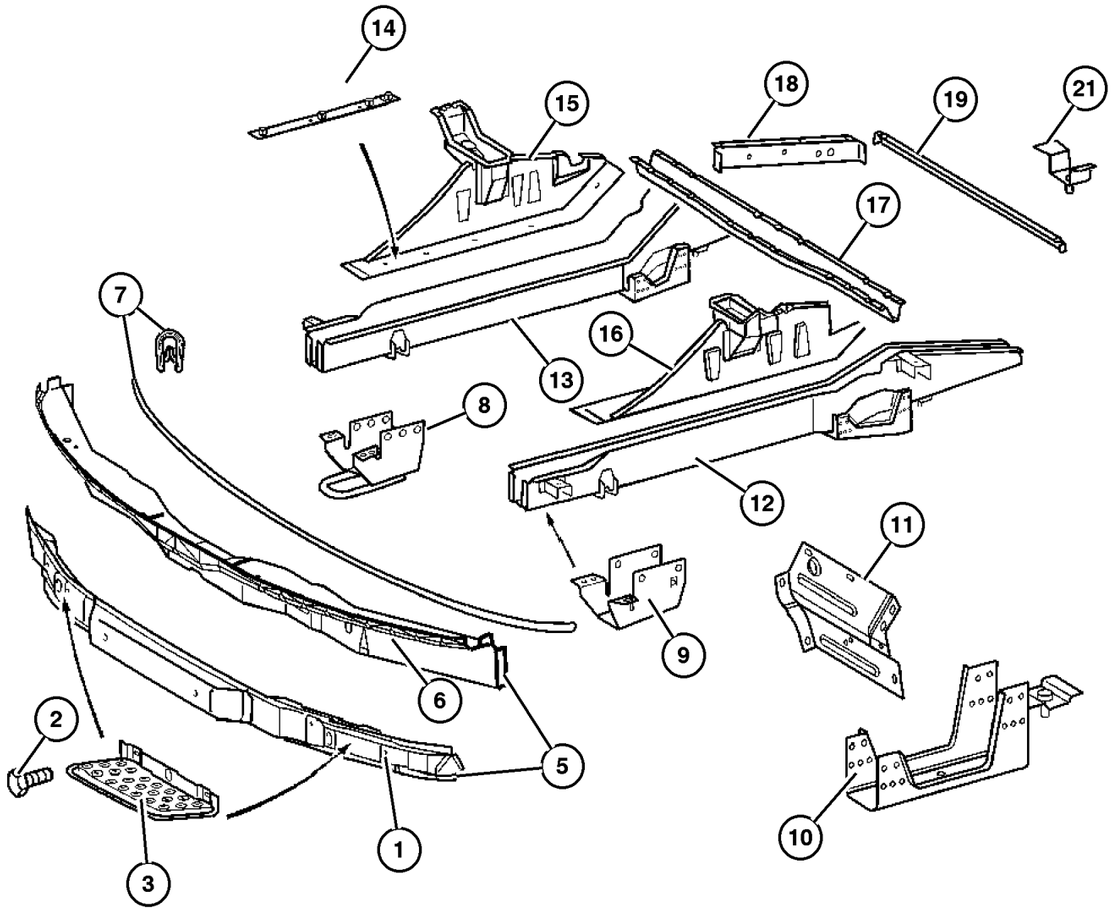

ITEM	PART NUMBER	QTY	LINE	SERIES	BODY	ENGINE	TRANS	TRIM	DESCRIPTION
		1	2, 6	L	11, 12, 14, 15, 16				
		1	2, 6	L	51, 52, 54, 55, 56				
		1	3, 7	L	02, 06				
		1	3, 7	L	12, 15, 16				
12									RAIL, Frame Front
	5104 055AA	1	2, 6	L	01, 02, 06				
		1	2, 6	L	11, 12, 14, 15, 16				
		1	2, 6	L	51, 52, 54, 55, 56				
		1	3, 7	L	02, 06				
		1	3, 7	L	12, 15, 16				
13									RAIL, Frame Front
	5104 052AA	1	2, 6	L	01, 02, 06				
		1	2, 6	L	11, 12, 14, 15, 16				
		1	2, 6	L	51, 52, 54, 55, 56				
		1	3, 7	L	02, 06				
		1	3, 7	L	12, 15, 16				
14									REINFORCEMENT, Rail Front
	5118 290AA	2	2, 6	L	01, 02, 06				
		2	2, 6	L	11, 12, 14, 15, 16				
		2	2, 6	L	51, 52, 54, 55, 56				
		2	3, 7	L	02, 06				
		2	3, 7	L	12, 15, 16				
15									SUPPORT, Under Body Hold Down

Refer to Model Legend Information Bookmark

AR = Use as required - = Non illustrated part # = New this model year

March 3, 2006

« RETURN TO GROUP INDEX

Front Frame Rails
Figure 013-105

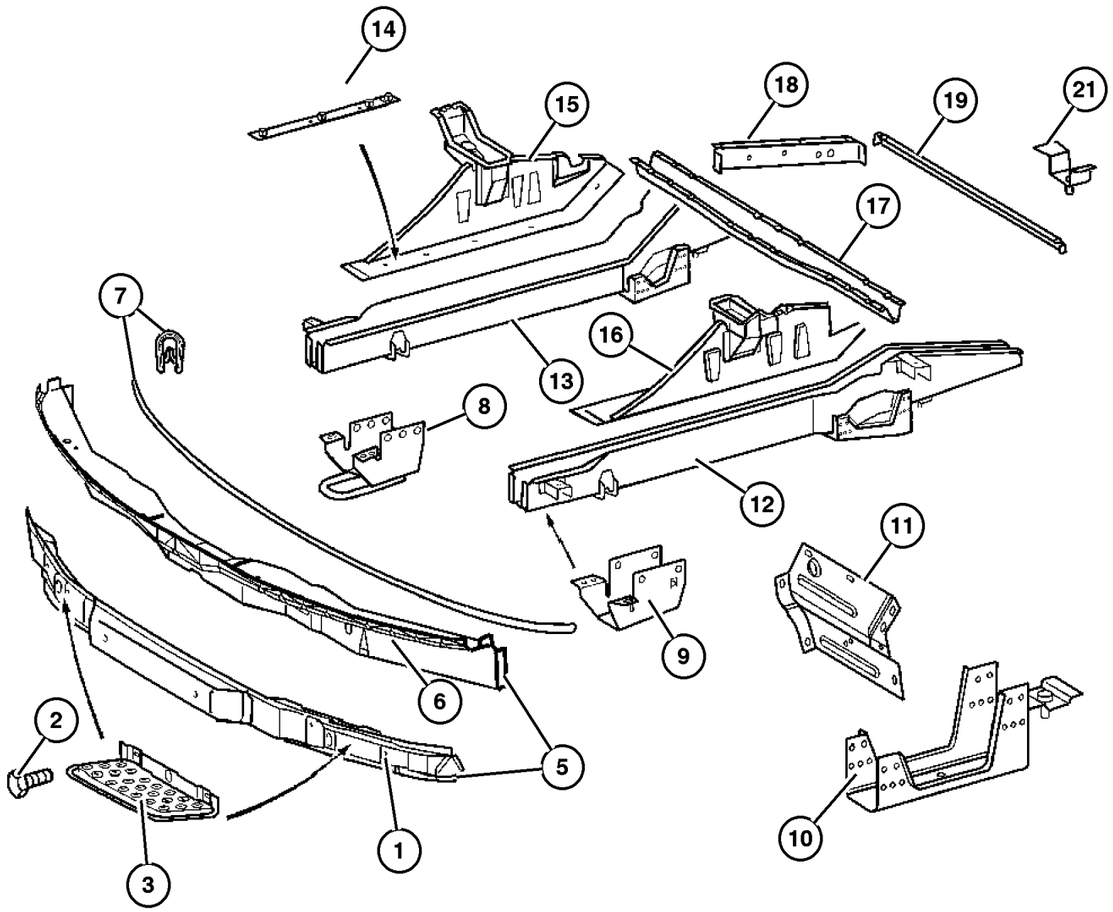

ITEM	PART NUMBER	QTY	LINE	SERIES	BODY	ENGINE	TRANS	TRIM	DESCRIPTION
	5118 252AA	1	2, 6	L	01, 02, 06				Right
		1	2, 6	L	11, 12, 14, 15, 16				Right
		1	2, 6	L	51, 52, 54, 55, 56				Right
		1	3, 7	L	02, 06				Right
		1	3, 7	L	12, 15, 16				Right
16									SUPPORT, Under Body Hold Down
	5104 049AA	1	2, 6	L	01, 02, 06				Left
		1	2, 6	L	11, 12, 14, 15, 16				Left
		1	2, 6	L	51, 52, 54, 55, 56				Left
		1	3, 7	L	02, 06				Left
		1	3, 7	L	12, 15, 16				Left
17									CROSSMEMBER, Front Seat Retention
	5118 385AA	1	2, 6	L	01, 02, 06				
		1	2, 6	L	11, 12, 14, 15, 16				
		1	2, 6	L	51, 52, 54, 55, 56				
		1	3, 7	L	02, 06				
		1	3, 7	L	12, 15, 16				
18									REINFORCEMENT, Wheelhouse
	5118 015AA	2	2, 6	L	01, 02, 06				
		2	2, 6	L	11, 12, 14, 15, 16				
		2	2, 6	L	51, 52, 54, 55, 56				

Refer to Model Legend Information Bookmark

AR = Use as required - = Non illustrated part # = New this model year

March 3, 2006

« RETURN TO GROUP INDEX

Front Frame Rails
Figure 013-105

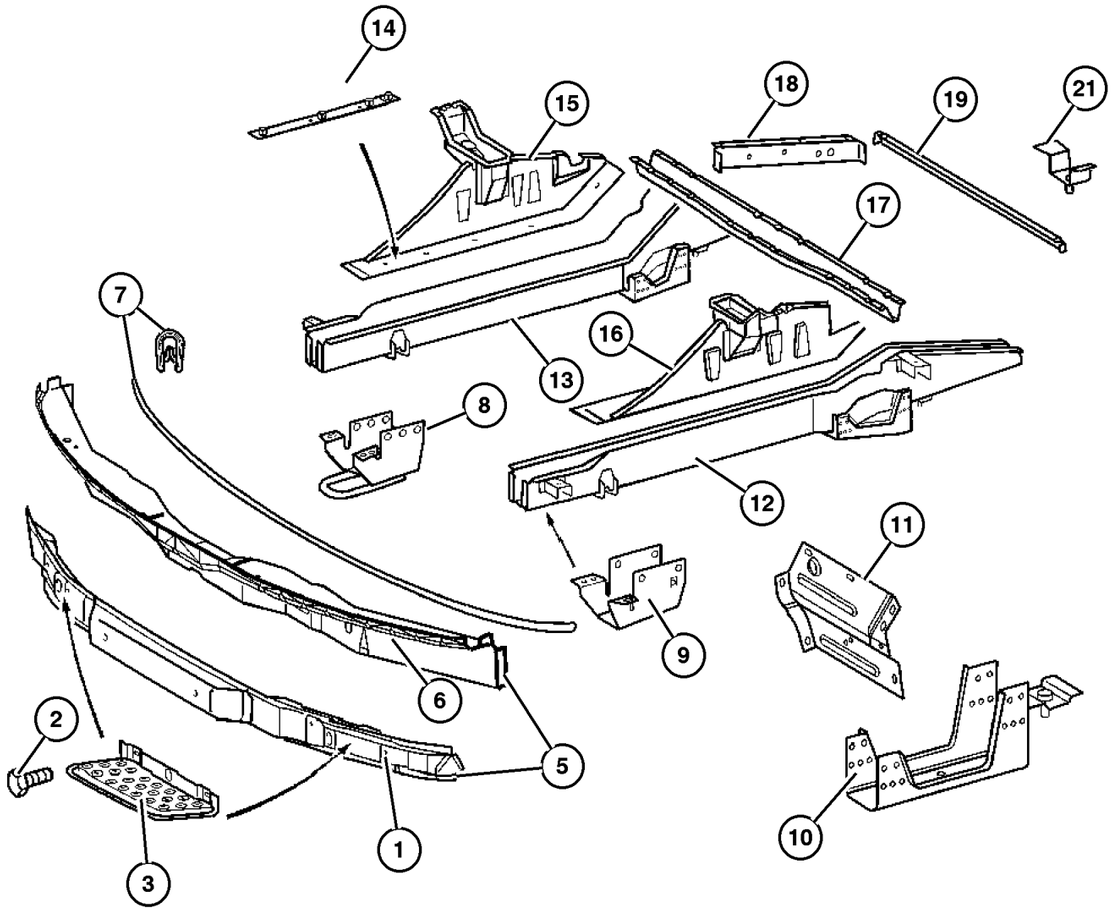

ITEM	PART NUMBER	QTY	LINE	SERIES	BODY	ENGINE	TRANS	TRIM	DESCRIPTION
		2	3, 7	L	02, 06				
		2	3, 7	L	12, 15, 16				
19									CROSSMEMBER, Front Floor
	5118 091AA	1	2, 6	L	01, 02, 06				
		1	2, 6	L	11, 12, 14, 15, 16				
		1	2, 6	L	51, 52, 54, 55, 56				
		1	3, 7	L	02, 06				
		1	3, 7	L	12, 15, 16				
-20									BRACKET, Aux A/C And Heater Line
	5127 245AA-	1	2, 6	L	11, 12, 14, 15, 16				
		1	2, 6	L	51, 52, 54, 55, 56				
		1	3, 7	L	12, 15, 16				
21									BRACKET
	5127 241AA	1	2, 6	L	11, 12, 14, 15, 16				
		1	2, 6	L	51, 52, 54, 55, 56				
		1	3, 7	L	12, 15, 16				

Refer to Model Legend Information Bookmark

AR = Use as required - = Non illustrated part # = New this model year

March 3, 2006

« RETURN TO GROUP INDEX

«

Side Frame Rails and Crossmembers 2500
Figure 013-110

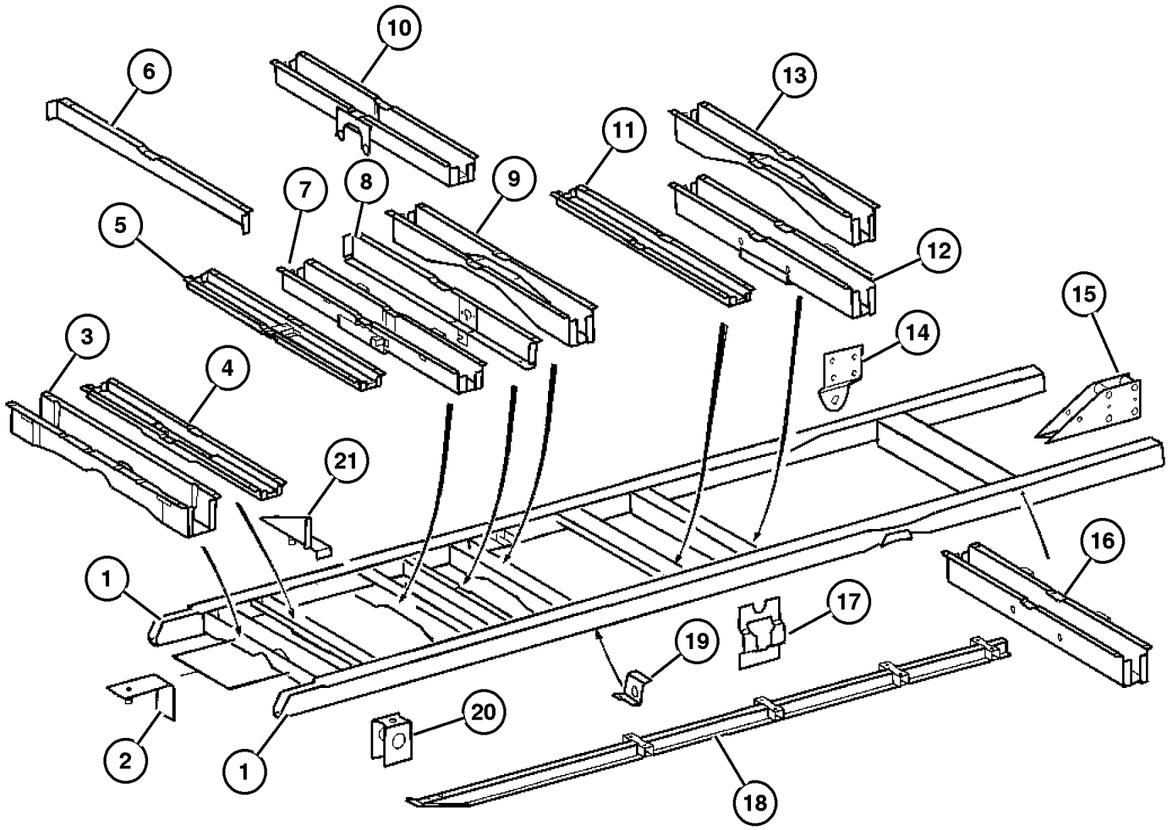

ITEM	PART NUMBER	QTY	LINE	SERIES	BODY	ENGINE	TRANS	TRIM	DESCRIPTION
1									RAIL, Frame Side
	5104 554AA	1	2, 6	L	16				Right
		1	2, 6	L	56				Right
	5104 555AA	1	2, 6	L	16				Left
		1	2, 6	L	56				Left
	5118 059AA	1	3, 7	L	02				Right
	5118 063AA	1	3, 7	L	06				Right
		1	3, 7	L	16				Right
	5118 078AA	1	3, 7	L	02				Left
	5118 082AA	1	3, 7	L	06				Left
		1	3, 7	L	16				Left
2									BRACKET, Frame
	5127 243AA	1	2, 6	L	11, 12, 14, 15, 16				
		1	2, 6	L	51, 52, 54, 55, 56				
		1	3, 7	L	12, 15, 16				
3									CROSSMEMBER, Front Frame
	5118 162AA	1	2, 6	L	01, 02, 06				
		1	2, 6	L	11, 12, 14, 15, 16				
		1	2, 6	L	51, 52, 54, 55, 56				
4									CROSSMEMBER, Front Frame
	5118 152AA	1	2, 6	L	01, 06				
		1	2, 6	L	11, 14				
		1	2, 6	L	51, 54				
		1	3, 7	L	06				
		1	3, 7	L	12, 15, 16				
5									CROSSMEMBER, Front Frame
	5118 142AA	1	2, 6	L	11, 12, 14, 15				
		1	2, 6	L	51, 52, 54, 55, 56				
		1	3, 7	L	12, 15, 16				
6									CROSSMEMBER, Front Frame, (NOT SERVICED) (Not Serviced)

Refer to Model Legend Information Bookmark

AR = Use as required - = Non illustrated part # = New this model year **March 3, 2006**

« RETURN TO GROUP INDEX »

Side Frame Rails and Crossmembers 2500
Figure 013-110

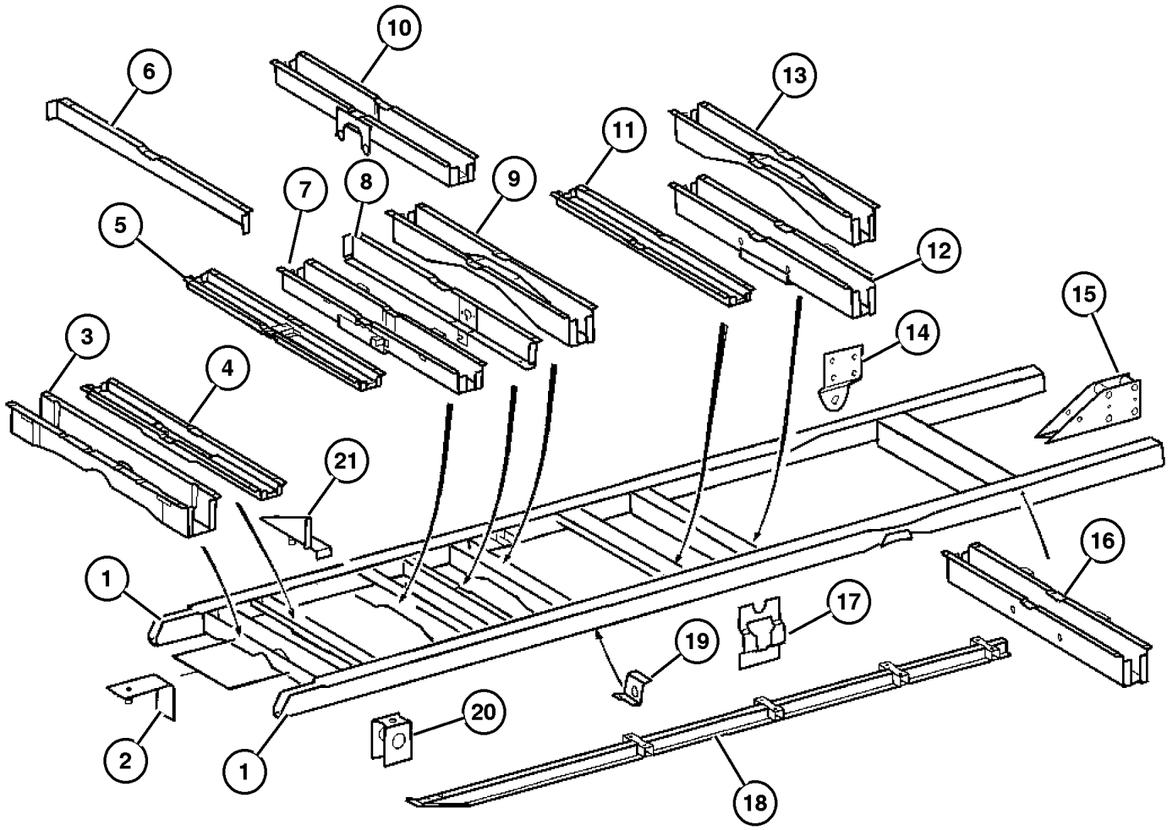

ITEM	PART NUMBER	QTY	LINE	SERIES	BODY	ENGINE	TRANS	TRIM	DESCRIPTION
7									CROSSMEMBER, Front Frame
	5118 097AA	1	2, 6	L	11, 12, 14, 15				
		1	2, 6	L	51, 52, 54, 55				
		1	3, 7	L	12, 15				
8									CROSSMEMBER, Front Frame
	5118 136AA	1	2, 6	L	01, 02				
		1	2, 6	L	11, 12, 14, 15, 16				
		1	2, 6	L	51, 52, 54, 55, 56				
		1	3, 7	L	02				
		1	3, 7	L	12, 15				
9									CROSSMEMBER, Front Frame
	5118 149AA	1	2, 6	L	11, 12, 14, 15				
		1	2, 6	L	51, 54				
10									CROSSMEMBER, Front Frame
	5118 160AA	1	2, 6	L	11, 12, 14, 15, 16				
		1	2, 6	L	51, 52, 54, 55, 56				
11									CROSSMEMBER, Front Frame
	5118 144AA	1	2, 6	L	11, 14				
		1	2, 6	L	51, 54				
		1	3, 7	L	12, 15, 16				
12									CROSSMEMBER, Front Frame
	5118 168AA	1	2, 6	L	11, 12, 14, 15, 16				
		1	2, 6	L	51, 52, 54, 55, 56				
		1	3, 7	L	12, 15, 16				
13									CROSSMEMBER, Front Frame
	5118 170AA	1	2, 6	L	11, 12, 14, 15, 16				

Refer to Model Legend Information Bookmark

AR = Use as required - = Non illustrated part # = New this model year

March 3, 2006

« RETURN TO GROUP INDEX

« »

Side Frame Rails and Crossmembers 2500
Figure 013-110

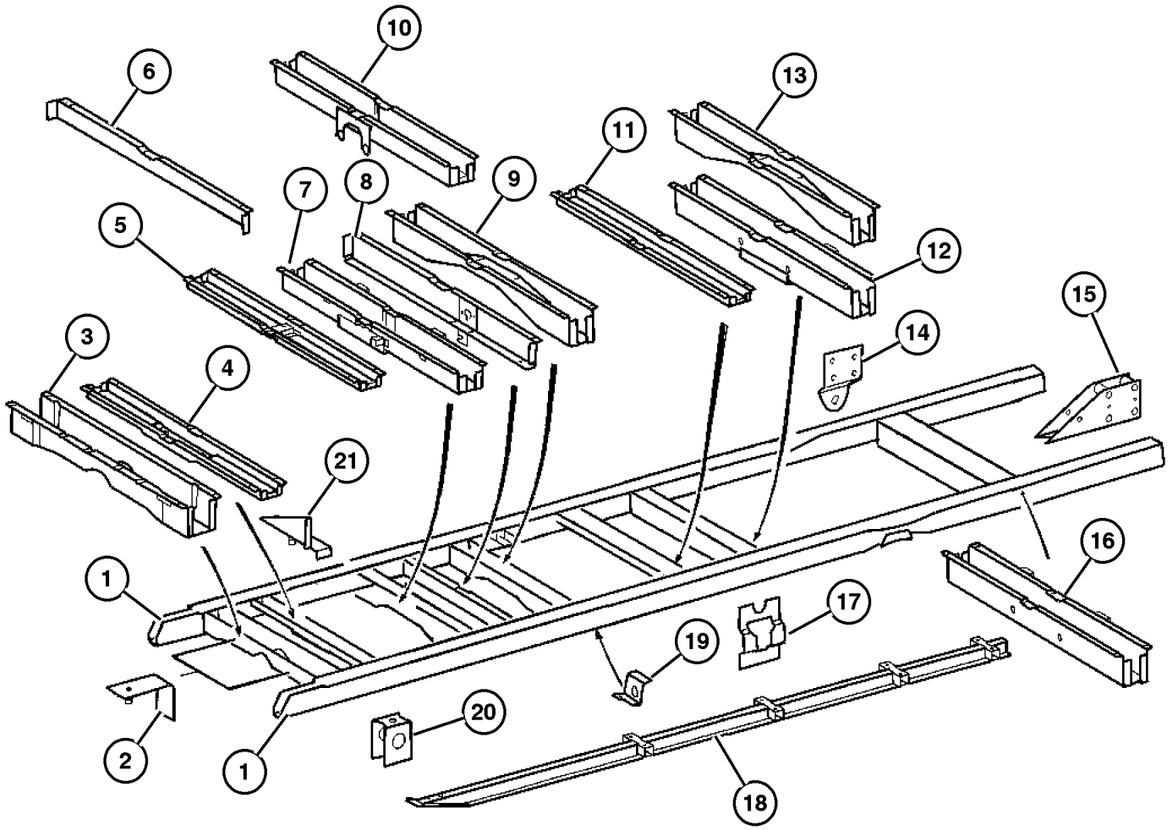

ITEM	PART NUMBER	QTY	LINE	SERIES	BODY	ENGINE	TRANS	TRIM	DESCRIPTION
		1	2, 6	L	51, 52, 54, 55, 56				
14									BRACKET, Frame
	5118 791AA	2	2, 6	L	01, 02, 06				
		2	2, 6	L	11, 12, 14, 15, 16				
		2	2, 6	L	51, 52, 54, 55, 56				
		4	3, 7	L	02, 06				
		4	3, 7	L	12, 15, 16				
15									BRACKET, Frame
	5118 212AA	2	2, 6	L	11, 12, 14, 15, 16				
		2	2, 6	L	51, 52, 54, 55, 56				
16									CROSSMEMBER, Front Frame
	5118 154AA	1	2, 6	L	11, 12, 14, 15, 16				
		1	2, 6	L	51, 52, 54, 55, 56				
17	5119 638AA	2	3, 7	L	02, 06				BRACKET, Frame
18									BRACKET, Frame Rail
	5118 220AA	1	2, 6	L	12, 15				
		1	2, 6	L	11, 12, 14, 15				
		1	2, 6	L	52, 55				
		1	3, 7	L	12, 15, 16				
19									BRACKET, Frame
	5119 321AA	1	2, 6	L	01, 02, 06				
		1	2, 6	L	11, 12, 14, 15, 16				

Refer to Model Legend Information Bookmark

AR = Use as required - = Non illustrated part # = New this model year

March 3, 2006

« RETURN TO GROUP INDEX

Side Frame Rails and Crossmembers 2500
Figure 013-110

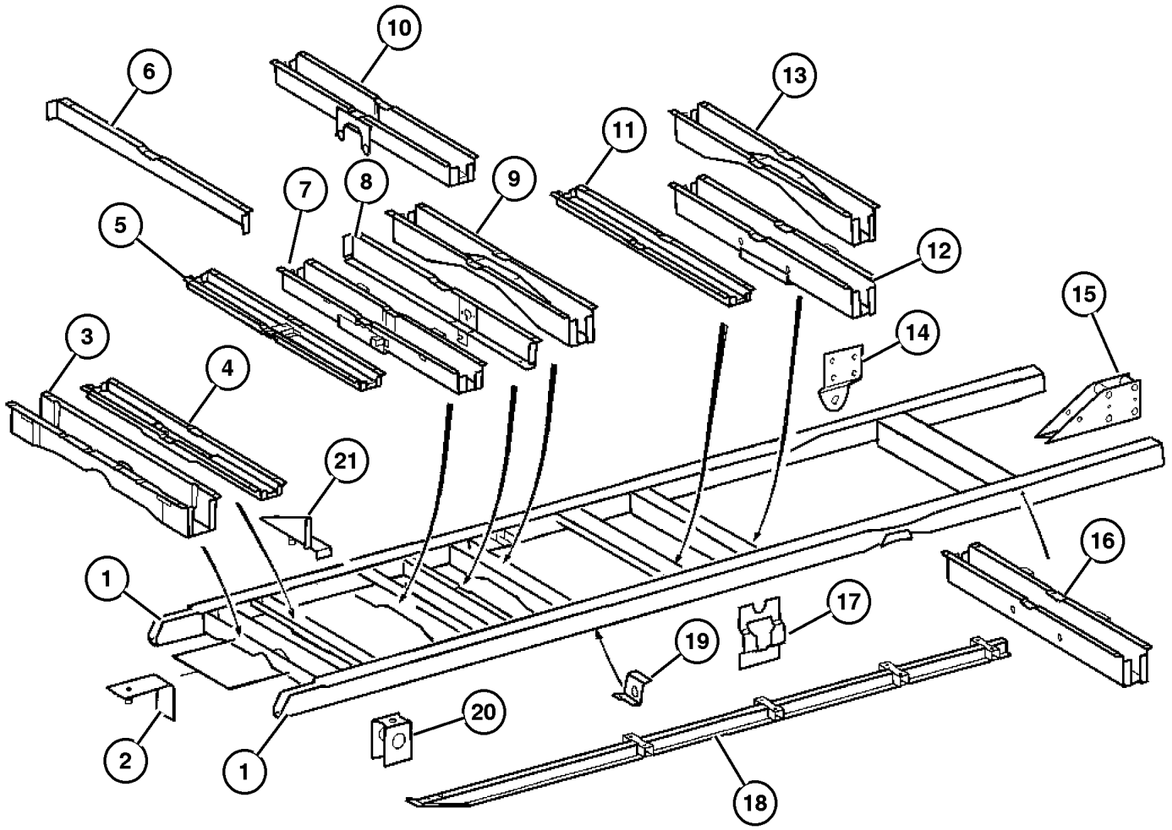

ITEM	PART NUMBER	QTY	LINE	SERIES	BODY	ENGINE	TRANS	TRIM	DESCRIPTION
		1	2, 6	L	51, 52, 54, 55, 56				
20	5118 266AA	4	2, 6	L	11, 12, 14, 15, 16				SUPPORT, Under Body Hold Down
		8	2, 6	L	12, 15				
		4	2, 6	L	11, 14				
		4	2, 6	L	51, 52, 54, 55, 56				
		4	2, 6	L	51, 54				
21	5127 246AA	8	2, 6	L	52, 55				BRACKET, Frame
		2	2, 6	L	11, 12, 14, 15, 16				
		2	2, 6	L	51, 52, 54, 55, 56				
		2	3, 7	L	12, 15, 16				

Refer to Model Legend Information Bookmark

AR = Use as required - = Non illustrated part # = New this model year

March 3, 2006

« RETURN TO GROUP INDEX

Side Frame Rails and Crossmembers 3500
Figure 013-120

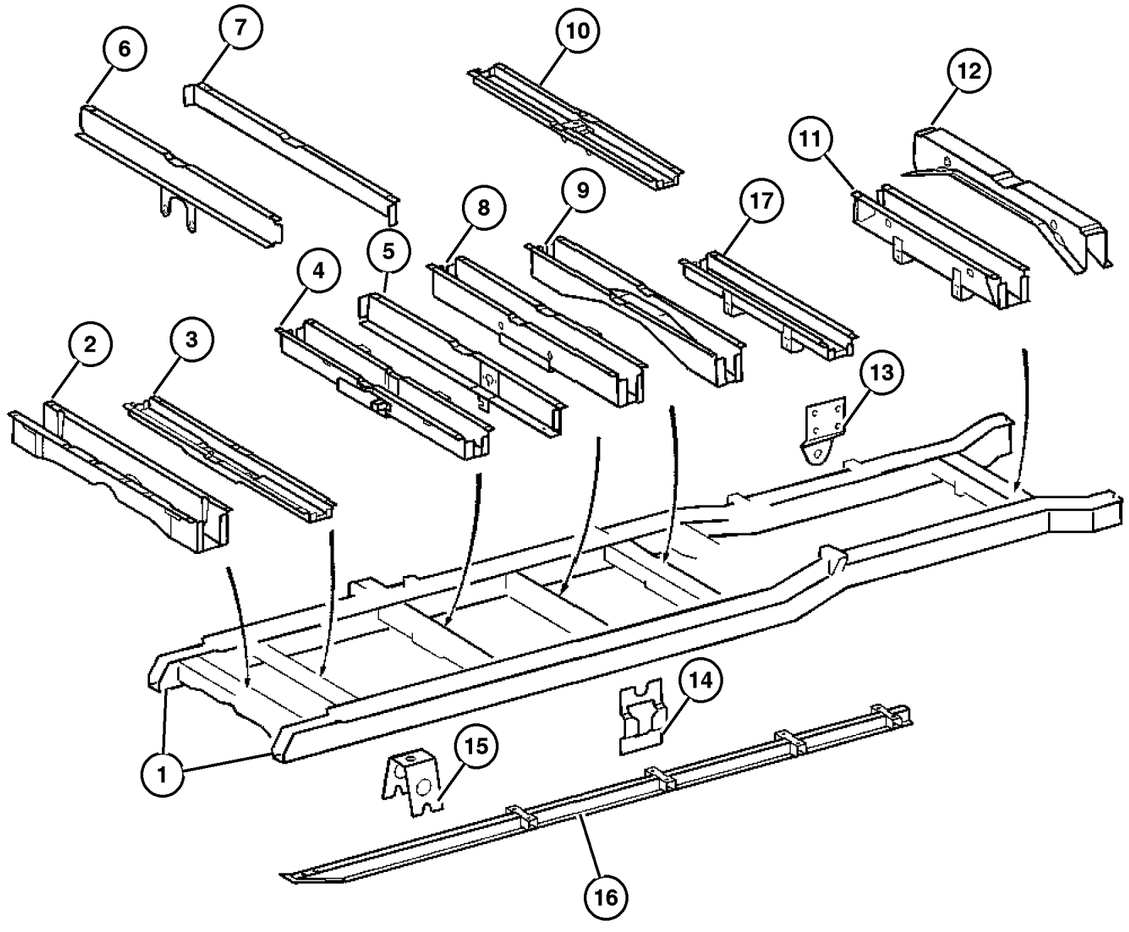

ITEM	PART NUMBER	QTY	LINE	SERIES	BODY	ENGINE	TRANS	TRIM	DESCRIPTION
1									RAIL, Frame Side, 05118063aa Lt.
	5118 082AA	1	3, 7	L	06				
		1	3, 7	L	16				
2									CROSSMEMBER, Front Frame
	5118 178AA	1	3, 7	L	02, 06				
		1	3, 7	L	12, 15, 16				
3									CROSSMEMBER, Front Frame
	5118 097AA	1	2, 6	L	11, 12, 14, 15				
		1	2, 6	L	51, 52, 54, 55				
		1	3, 7	L	12, 15				
4									CROSSMEMBER, Front Frame
	5118 097AA	1	2, 6	L	11, 12, 14, 15				
		1	2, 6	L	51, 52, 54, 55				
		1	3, 7	L	12, 15				
5									CROSSMEMBER, Front Frame
	5118 136AA	1	2, 6	L	01, 02				
		1	2, 6	L	11, 12, 14, 15				
		1	2, 6	L	11, 12, 14, 15, 16				
		1	2, 6	L	51, 52, 54, 55, 56				
		1	3, 7	L	02				
		1	3, 7	L	12, 15				
6									CROSSMEMBER, Rear Frame
	5118 182AA	1	3, 7	L	02, 06				
		1	3, 7	L	12, 15, 16				
7									CROSSMEMBER, Front Frame, (NOT SERVICED) (Not Serviced)
8									CROSSMEMBER, Front Frame
	5118 149AA	1	2, 6	L	11, 12, 14, 15				
		1	2, 6	L	51, 54				
9									CROSSMEMBER, Front Frame
	5118 170AA	1	2, 6	L	11, 12, 14, 15, 16				

Refer to Model Legend Information Bookmark

Side Frame Rails and Crossmembers 3500
Figure 013-120

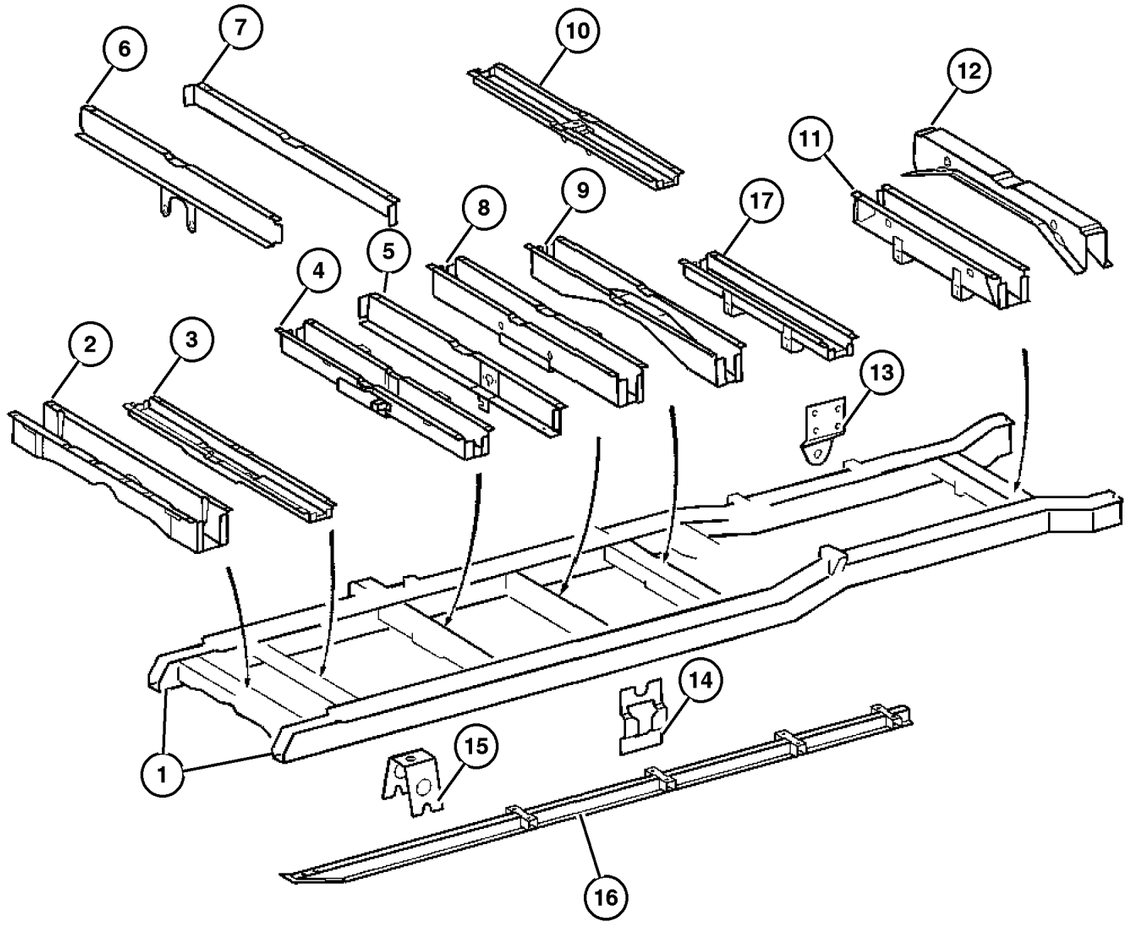

ITEM	PART NUMBER	QTY	LINE	SERIES	BODY	ENGINE	TRANS	TRIM	DESCRIPTION
		1	2, 6	L	51, 52, 54, 55, 56				
10	5118 142AA	1	2, 6	L	11, 12, 14, 15 51, 52, 54, 55, 56				CROSSMEMBER, Front Frame
		1	3, 7	L	12, 15, 16				
11	5118 182AA	1	3, 7	L	02, 06				CROSSMEMBER, Rear Frame
		1	3, 7	L	12, 15, 16				
12	5118 174AA	1	3, 7	L	02, 06				CROSSMEMBER, Shock Mount
		1	3, 7	L	12, 15, 16				
13	5118 791AA	2	2, 6	L	01, 02, 06				BRACKET, Frame
		2	2, 6	L	11, 12, 14, 15, 16				
		2	2, 6	L	51, 52, 54, 55, 56				
		4	3, 7	L	02, 06				
		4	3, 7	L	12, 15, 16				
14	5119 638AA	1	3, 7	L	02, 06				BRACKET, Frame
		2	3, 7	L	12, 15, 16				
15	5118 223AA	2	3, 7	L	12, 15				BRACKET, Crossmember
		4	3, 7	L	16				
16	5118 220AA	1	2, 6	L	12, 15				BRACKET, Frame Rail
		1	2, 6	L	11, 12, 14, 15, 16				

Refer to Model Legend Information Bookmark

Side Frame Rails and Crossmembers 3500
Figure 013-120

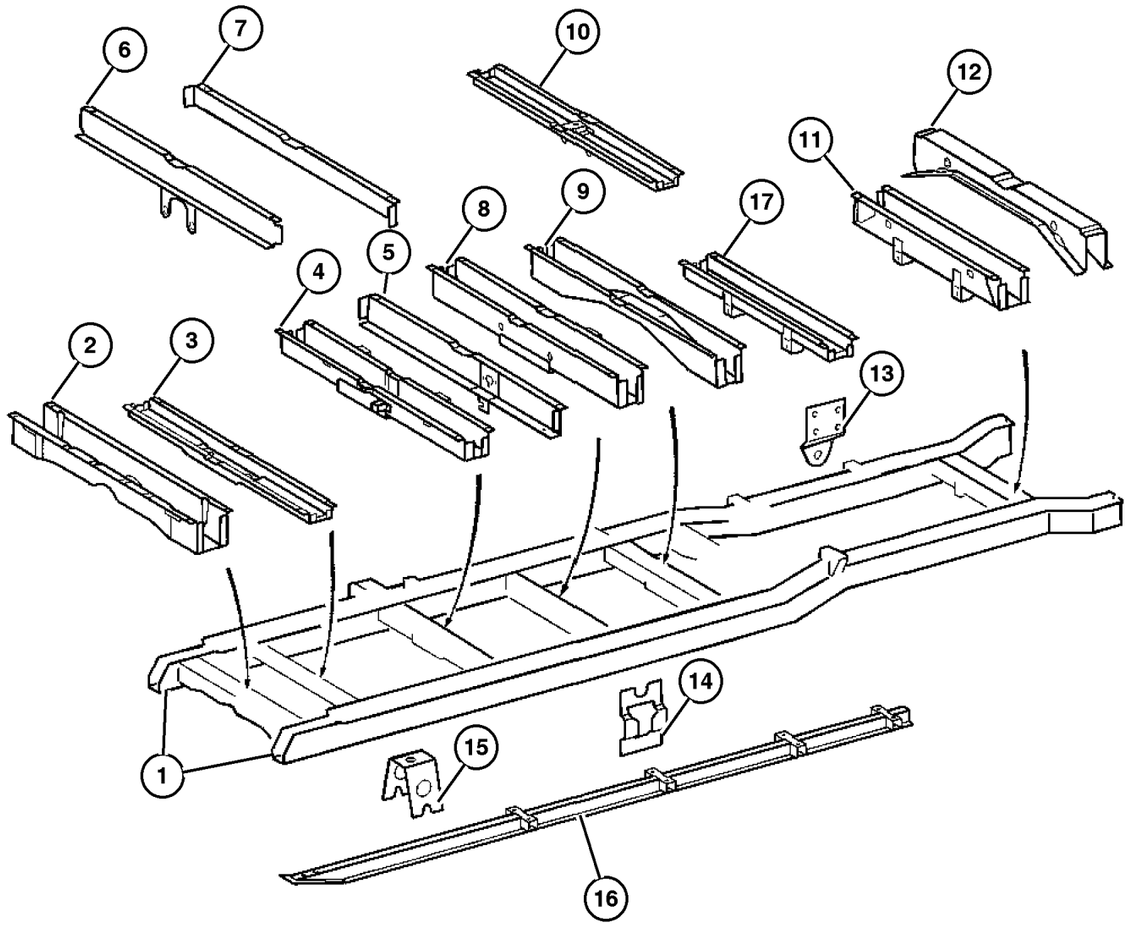

ITEM	PART NUMBER	QTY	LINE	SERIES	BODY	ENGINE	TRANS	TRIM	DESCRIPTION
		1	2, 6	L	51, 52, 54, 55, 56				
		1	3, 7	L	12, 15, 16				
17									CROSSMEMBER, Rear Frame, (NOT SERVICED) (Not Serviced)

Refer to Model Legend Information Bookmark

AR = Use as required - = Non illustrated part # = New this model year

March 3, 2006

« RETURN TO GROUP INDEX

Brackets, Frame To Body Supports
Figure 013-130

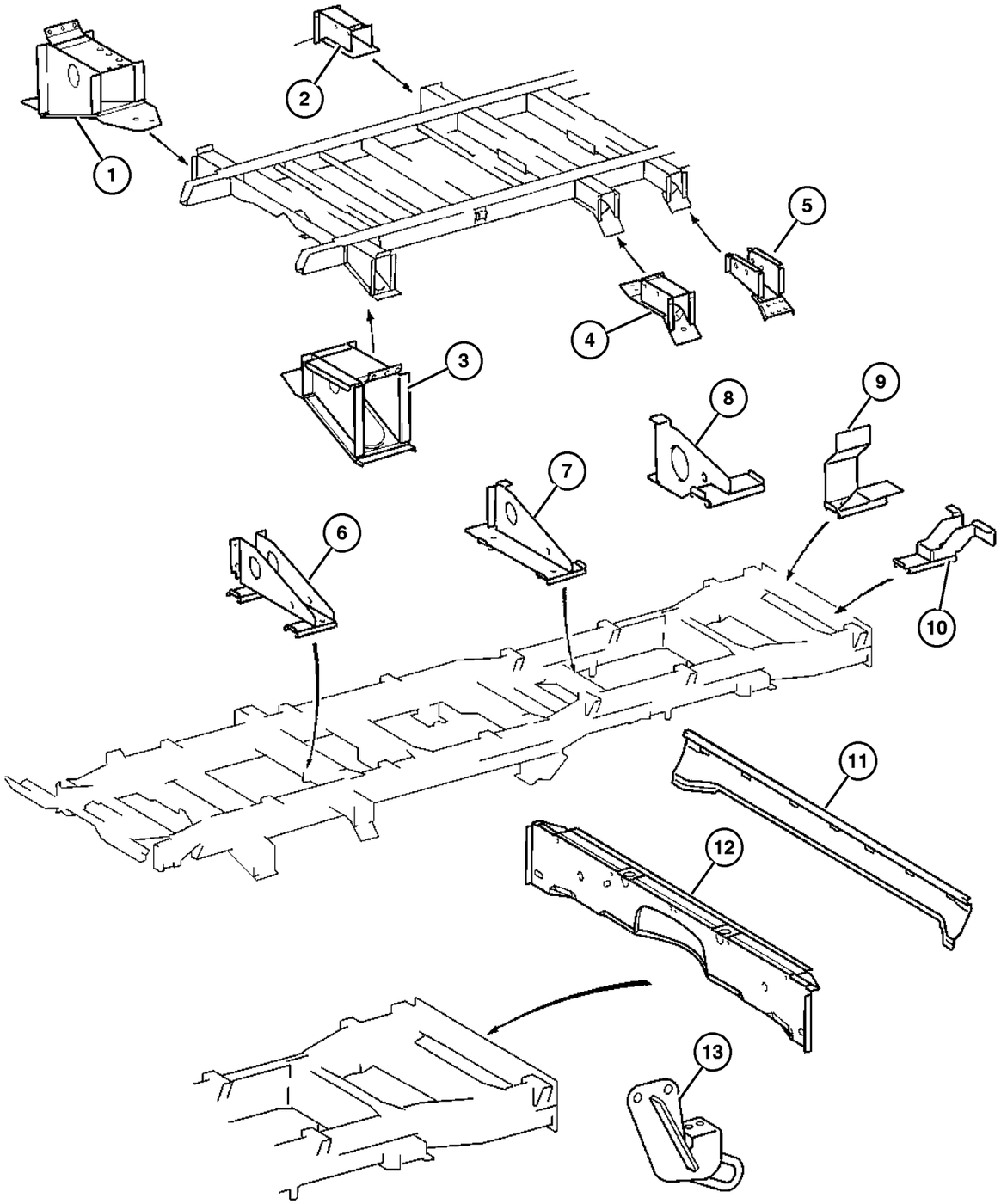

ITEM	PART NUMBER	QTY	LINE	SERIES	BODY	ENGINE	TRANS	TRIM	DESCRIPTION
1									BRACKET, Frame Rail
	5118 013AA	1	2, 6	L	11, 12, 14, 15, 16				Right
		1	2, 6	L	51, 52, 54, 55, 56				Right
2									BRACKET, Frame Rail
	5118 024AA	1	2, 6	L	12, 15				Right
		1	2, 6	L	52, 55				Right
		1	3, 7	L	12, 15, 16				Right
3									BRACKET, Frame Rail
	5118 031AA	1	2, 6	L	11, 12, 14, 15, 16				Left
		1	2, 6	L	51, 52, 54, 55, 56				Left
		1	3, 7	L	12, 15, 16				Left
4									BRACKET, Frame Rail
	5118 025AA	1	2, 6	L	12, 15				
		1	2, 6	L	52, 55				
		1	3, 7	L	12, 15, 16				
5	5118 029AA	2	3, 7	L	12, 15, 16				BRACKET, Frame Rail, Right & Left
6									BRACKET, Frame
	5119 822AA	1	2, 6	L	01, 02, 06				
		1	2, 6	L	11, 12, 14, 15, 16				
		1	2, 6	L	51, 52, 54, 55, 56				
		1	3, 7	L	02, 06				
		1	3, 7	L	12, 15, 16				
7									BRACKET, Frame
	5119 804AA	1	2, 6	L	02, 06				
		1	2, 6	L	11, 12, 14, 15, 16				

Refer to Model Legend Information Bookmark

Brackets, Frame To Body Supports
Figure 013-130

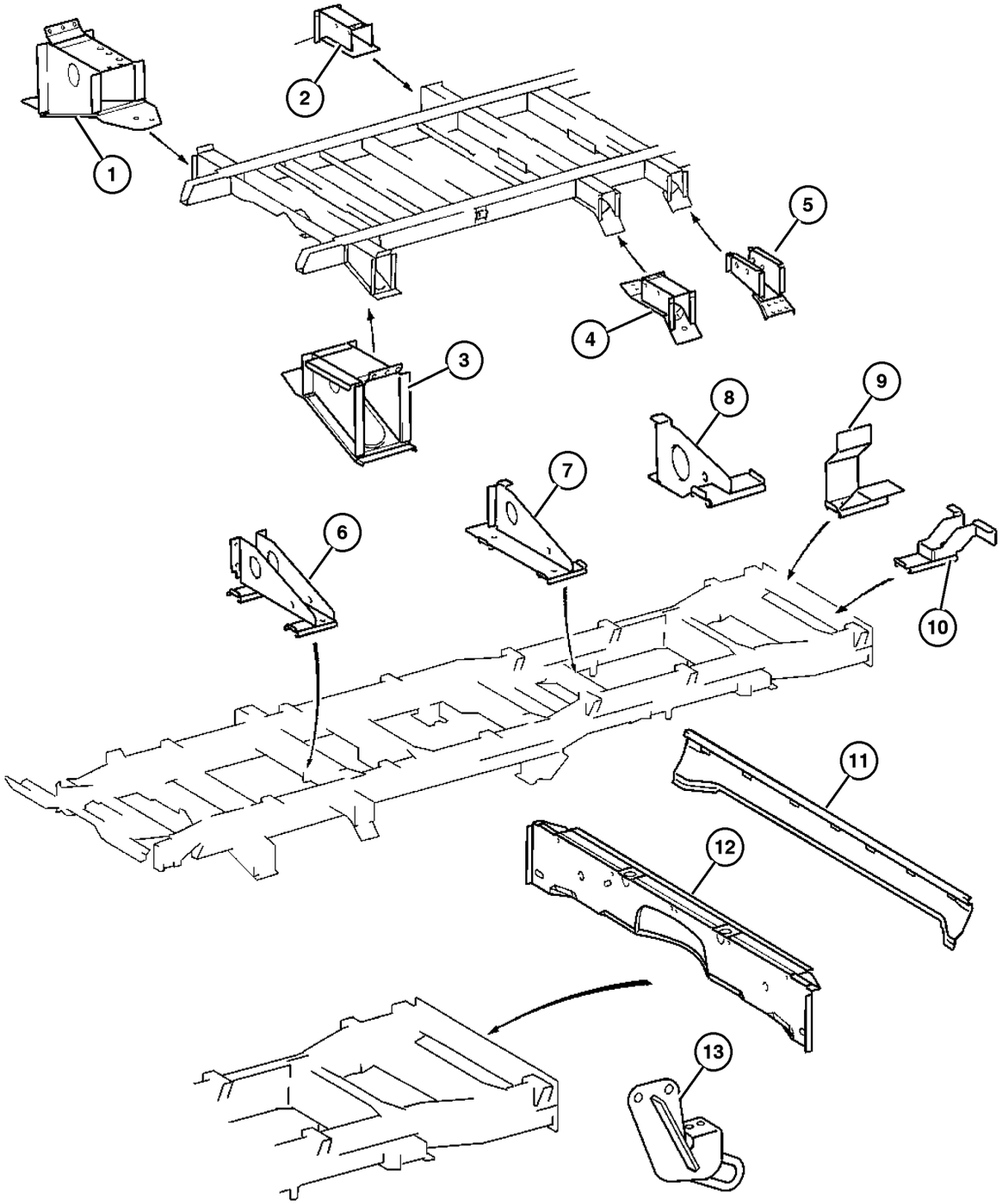

ITEM	PART NUMBER	QTY	LINE	SERIES	BODY	ENGINE	TRANS	TRIM	DESCRIPTION
		1	2, 6	L	51, 52,				
					54, 55,				
					56				
		1	3, 7	L	02, 06				
		1	3, 7	L	12, 15,				
					16				
8									BRACKET, Exhaust, Muffler
	5119 811AA	1	2, 6	L	06				
		1	2, 6	L	11, 12,				
					14, 15,				
					16				
		1	2, 6	L	51, 52,				
					54, 55,				
					56				
9									BRACKET, Exhaust, Muffler
	5119 826AA	1	3, 7	L	02, 06				
		1	3, 7	L	12, 15,				
					16				
10									BRACKET, Exhaust, Muffler
	5119 826AA	1	3, 7	L	02, 06				
		1	3, 7	L	12, 15,				
					16				
11									REINFORCEMENT, Rear Bumper
	5104 159AA	1	2, 6	L	11, 12,				
					14, 15,				
					16				
		1	2, 6	L	51, 52,				
					54, 55,				
					56				
		1	3, 7	L	12, 15,				
					16				
12									REINFORCEMENT, Rear Bumper
	5104 050AA	1	2, 6	L	11, 12,				
					14, 15,				
					16				
		1	2, 6	L	51, 52,				
					54, 55,				
					56				
		1	3, 7	L	12, 15,				
					16				
13									HOOK, Tow
	5118 001AA	1	2, 6	L	11, 14				
		1	2, 6	L	51, 54				
	5118 003AA	1	2, 6	L	12, 15				
		1	2, 6	L	52, 55				

Refer to Model Legend Information Bookmark

AR = Use as required - = Non illustrated part # = New this model year

March 3, 2006

« RETURN TO GROUP INDEX

« »

Brackets, Frame To Body Supports
Figure 013-130

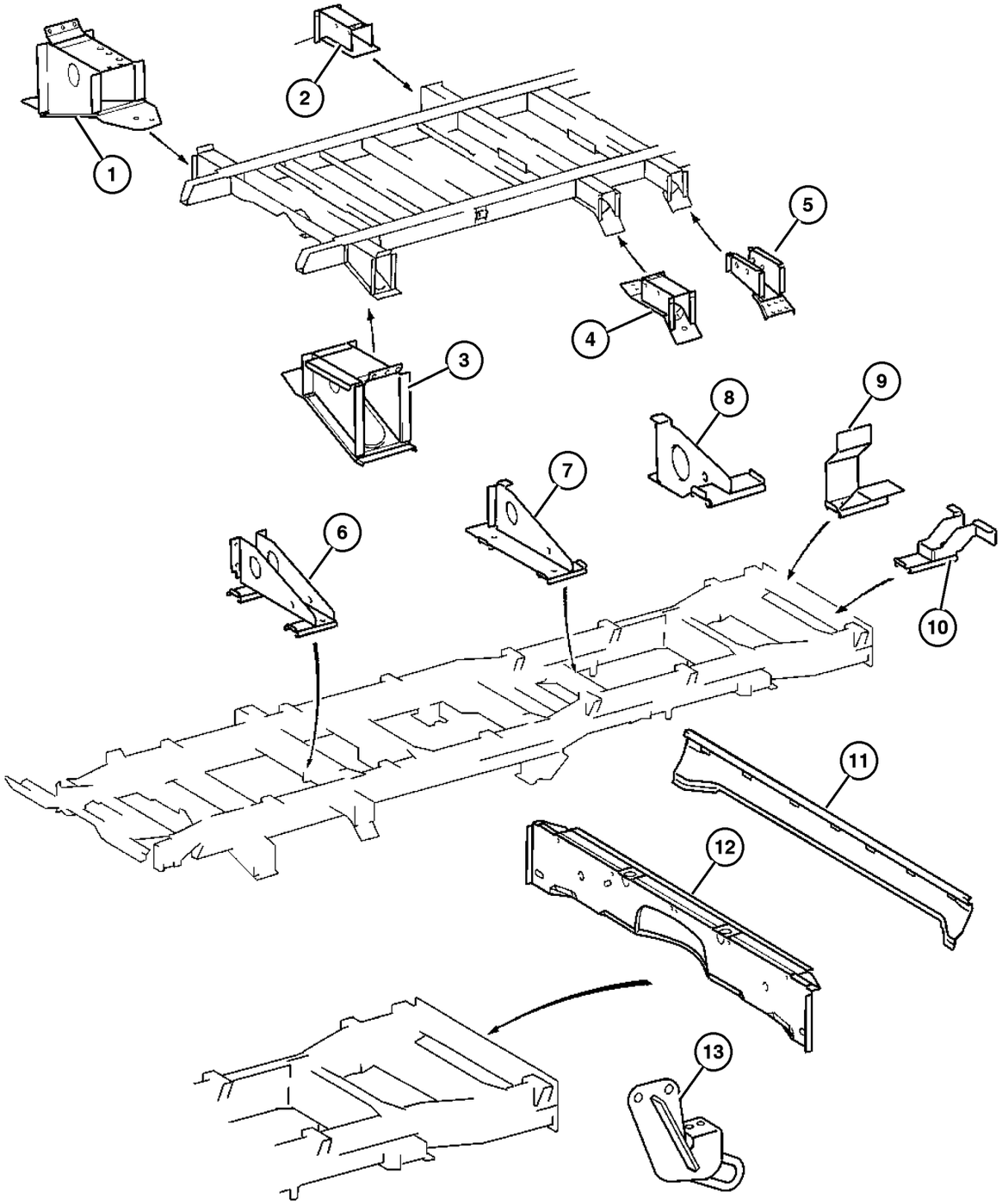

ITEM	PART NUMBER	QTY	LINE	SERIES	BODY	ENGINE	TRANS	TRIM	DESCRIPTION
	5118 006AA	1	3, 7	L	12, 15				
	5118 008AA	1	3, 7	L	16				

Refer to Model Legend Information Bookmark

Bumper, Front
Figure 013-230

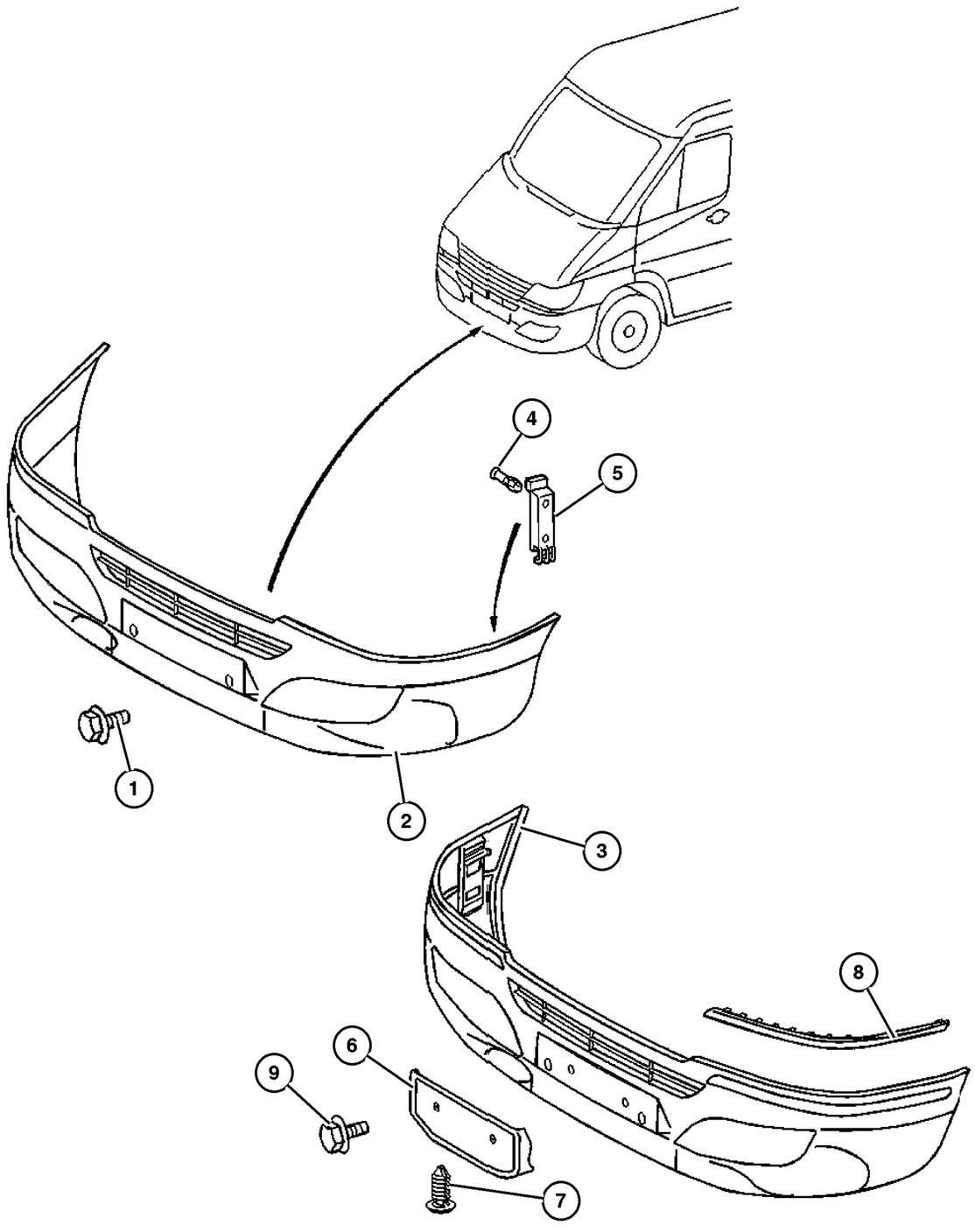

ITEM	PART NUMBER	QTY	LINE	SERIES	BODY	ENGINE	TRANS	TRIM	DESCRIPTION
1									SCREW
	5103 728AA	2	2, 6	L	01, 02, 06				
		2	2, 6	L	11, 12, 14, 15, 16				
		2	2, 6	L	51, 52, 54, 55, 56				
		2	3, 7	L	02, 06				
		2	3, 7	L	12, 15, 16				
2									FASCIA, Front
	5104 513AA	1	2, 6	L	01, 02, 06				Without [MJD] or [WDG]
		1	2, 6	L	11, 12, 14, 15, 16				
		1	2, 6	L	51, 52, 54, 55, 56				
		1	3, 7	L	02, 06				
		1	3, 7	L	12, 15, 16				
	5132 494AA	1	2, 6	L	01, 02, 06				[WDG]
		1	2, 6	L	11, 12, 14, 15, 16				[WDG]
		1	2, 6	L	51, 52, 54, 55, 56				[WDG]
		1	3, 7	L	02, 06				[WDG]
3									FASCIA, Front
	5104 517AA	1	2, 6	L	01, 02, 06				[MJD]
		1	2, 6	L	11, 12, 14, 15, 16				[MJD]
		1	2, 6	L	51, 52, 54, 55, 56				[MJD]
		1	3, 7	L	02, 06				[MJD]
		1	3, 7	L	12, 15, 16				[MJD]

Refer to Model Legend Information Bookmark

AR = Use as required - = Non illustrated part # = New this model year

March 3, 2006

« RETURN TO GROUP INDEX

»

Bumper, Front
Figure 013-230

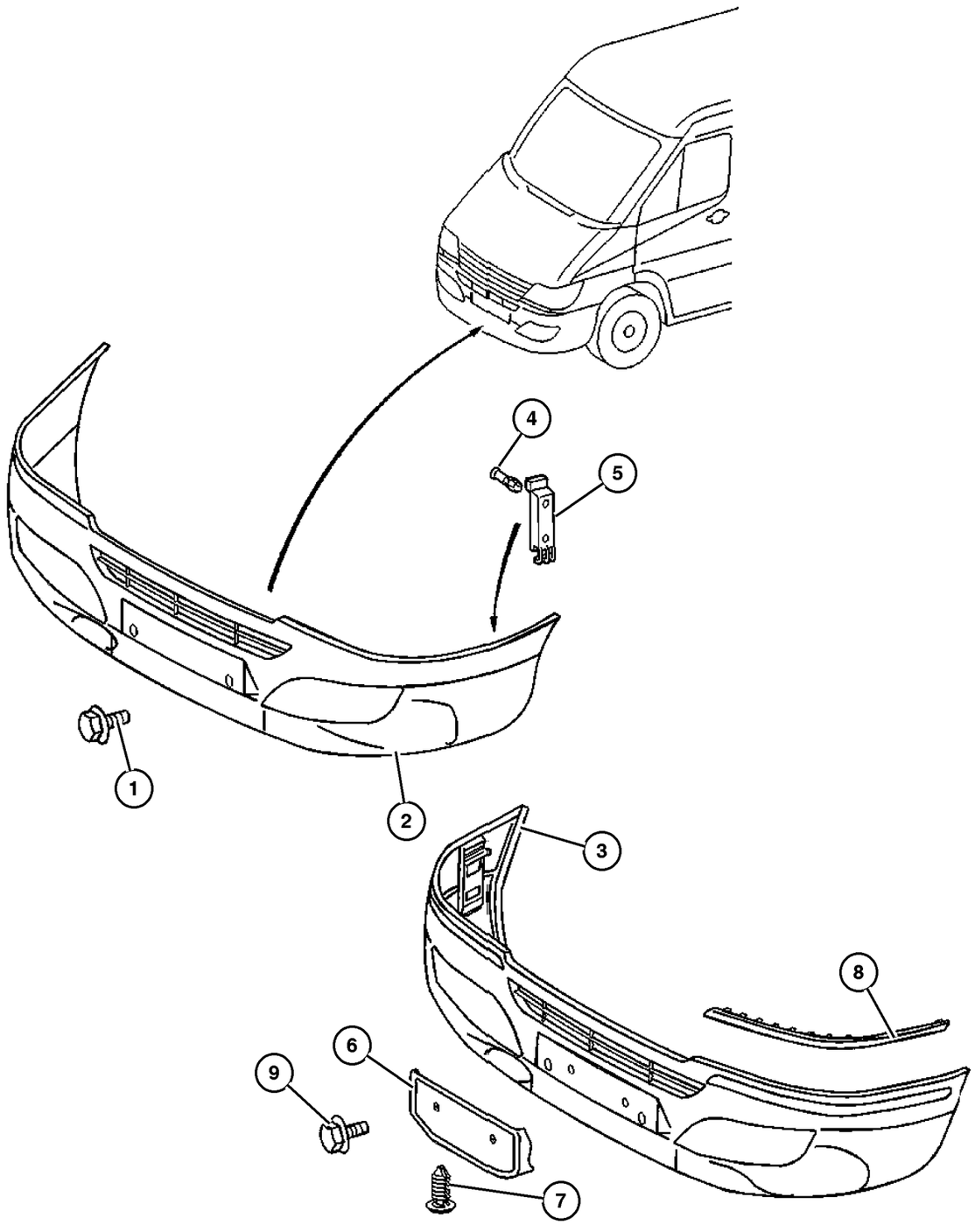

ITEM	PART NUMBER	QTY	LINE	SERIES	BODY	ENGINE	TRANS	TRIM	DESCRIPTION
	5132 496AA	1	2, 6	L	01, 02, 06				[MJD,WDG]
		1	2, 6	L	11, 12, 14, 15, 16				[MJD,WDG]
		1	2, 6	L	51, 52, 54, 55, 56				[MJD,WDG]
		1	3, 7	L	02, 06				[MJD,WDG]
4									RETAINER, Fascia
	5104 543AA	4	2, 6	L	01, 02, 06				
		4	2, 6	L	11, 12, 14, 15, 16				
		4	2, 6	L	51, 52, 54, 55, 56				
		4	3, 7	L	02, 06				
		4	3, 7	L	12, 15, 16				
5									BRACKET, Front Bumper
	5104 505AA	2	2, 6	L	01, 02, 06				
		2	2, 6	L	11, 12, 14, 15, 16				
		2	2, 6	L	51, 52, 54, 55, 56				
		2	3, 7	L	02, 06				
		2	3, 7	L	12, 15, 16				
6									BRACKET, License Plate, Chrome
	5104 524AA	1	2, 6	L	01, 02, 06				
		1	2, 6	L	11, 12, 14, 15, 16				
		1	2, 6	L	51, 52, 54, 55, 56				
		1	3, 7	L	02, 06				
		1	3, 7	L	12, 15, 16				
7									PLUG

Refer to Model Legend Information Bookmark

AR = Use as required - = Non illustrated part # = New this model year

March 3, 2006

« RETURN TO GROUP INDEX

Bumper, Front
Figure 013-230

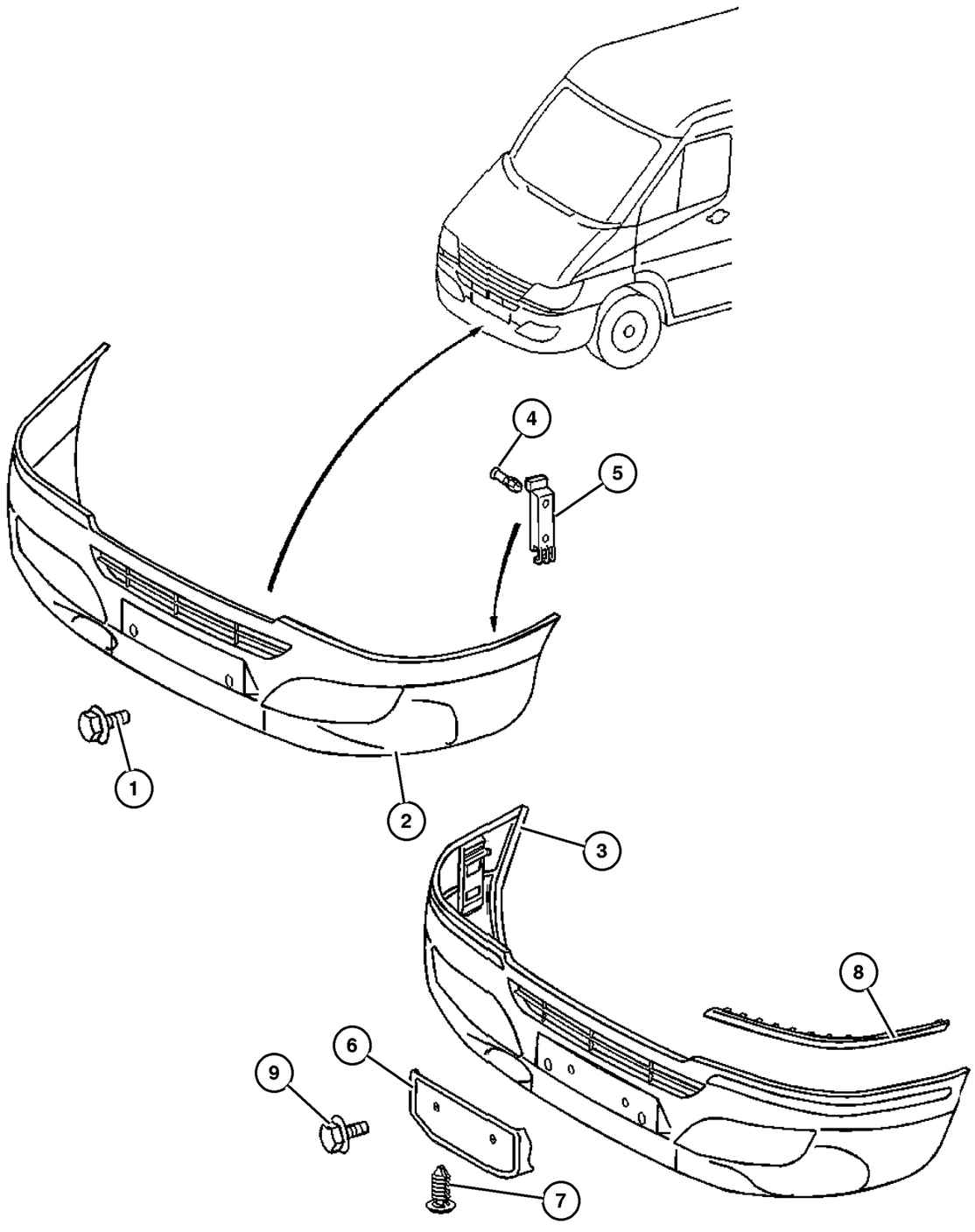

ITEM	PART NUMBER	QTY	LINE	SERIES	BODY	ENGINE	TRANS	TRIM	DESCRIPTION
	5103 817AA	2	2, 6	L	01, 02, 06				
		2	2, 6	L	11, 12, 14, 15, 16				
		2	2, 6	L	51, 52, 54, 55, 56				
		2	3, 7	L	02, 06				
		2	3, 7	L	12, 15, 16				
8									NERF, Fascia
	5104 523AA	1	2, 6	L	01, 02, 06				Right
		1	2, 6	L	11, 12, 14, 15, 16				Right
		1	2, 6	L	51, 52, 54, 55, 56				Right
		1	3, 7	L	02, 06				Right
		1	3, 7	L	12, 15, 16				Right
	5104 525AA	1	2, 6	L	01, 02, 06				Left
		1	2, 6	L	11, 12, 14, 15, 16				Left
		1	2, 6	L	51, 52, 54, 55, 56				Left
		1	3, 7	L	02, 06				Left
		1	3, 7	L	12, 15, 16				Left
9									SCREW, 5 x 16, (NOT SERVICED) (Not Serviced)

Refer to Model Legend Information Bookmark

Bumper, Rear
Figure 013-320

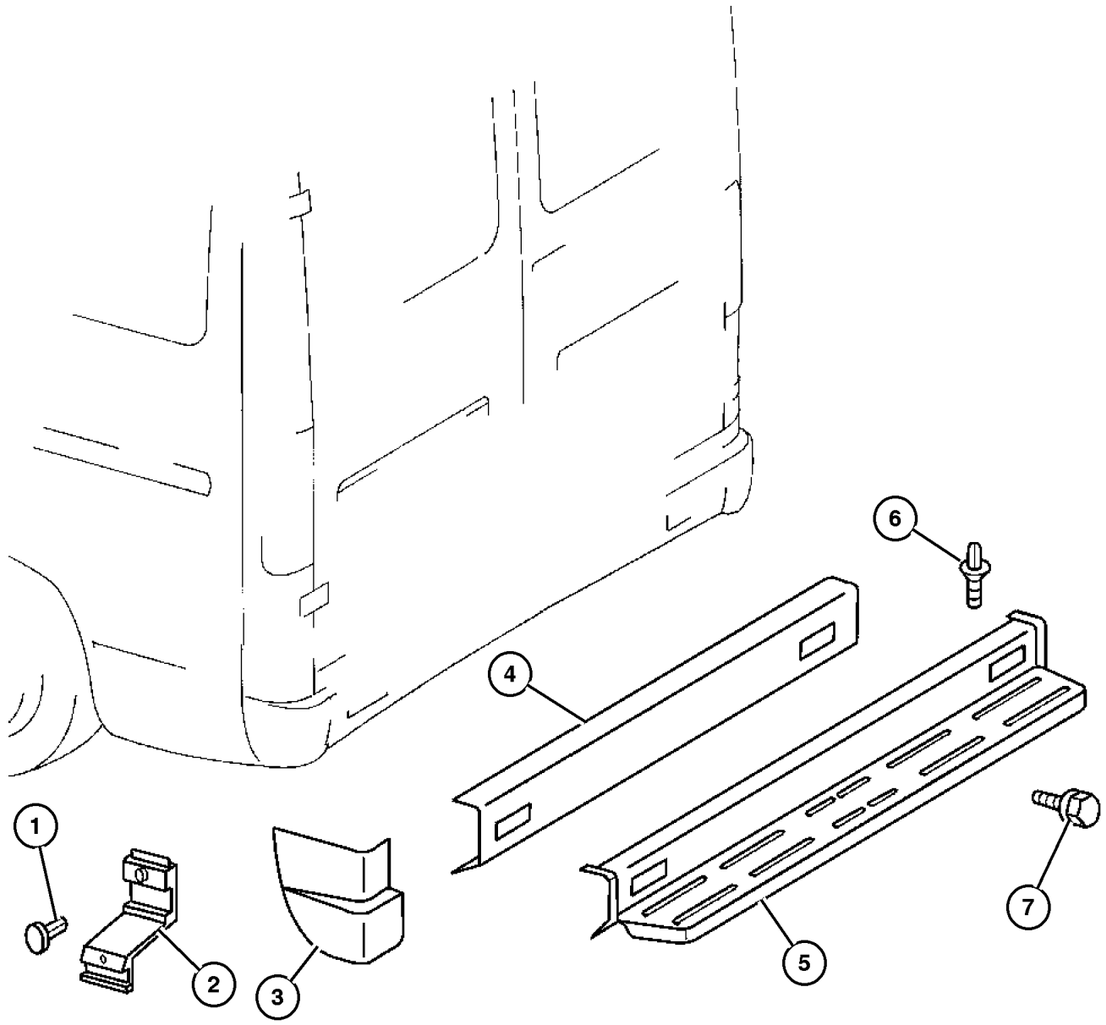

ITEM	PART NUMBER	QTY	LINE	SERIES	BODY	ENGINE	TRANS	TRIM	DESCRIPTION
1									RETAINER, Fascia
	5104 543AA	4	2, 6	L	01, 02, 06				
		4	2, 6	L	11, 12, 14, 15, 16				
		4	2, 6	L	51, 52, 54, 55, 56				
		4	3, 7	L	02, 06				
		4	3, 7	L	12, 15, 16				
2									BRACKET, Rear Bumper
	5104 508AA	1	2, 6	L	11, 12, 14, 15, 16				Left
		1	2, 6	L	51, 52, 54, 55, 56				Left
		1	3, 7	L	12, 15, 16				Left
	5104 510AA	1	2, 6	L	11, 12, 14, 15, 16				Right
		1	2, 6	L	51, 52, 54, 55, 56				Right
		1	3, 7	L	12, 15, 16				Right
3									COVER, Fascia
	5104 509AA	1	2, 6	L	11, 12, 14, 15, 16				Left
		1	2, 6	L	51, 52, 54, 55, 56				Left
		1	3, 7	L	12, 15, 16				Left
	5104 511AA	1	2, 6	L	11, 12, 14, 15, 16				Right
		1	2, 6	L	51, 52, 54, 55, 56				Right

Refer to Model Legend Information Bookmark

Bumper, Rear
Figure 013-320

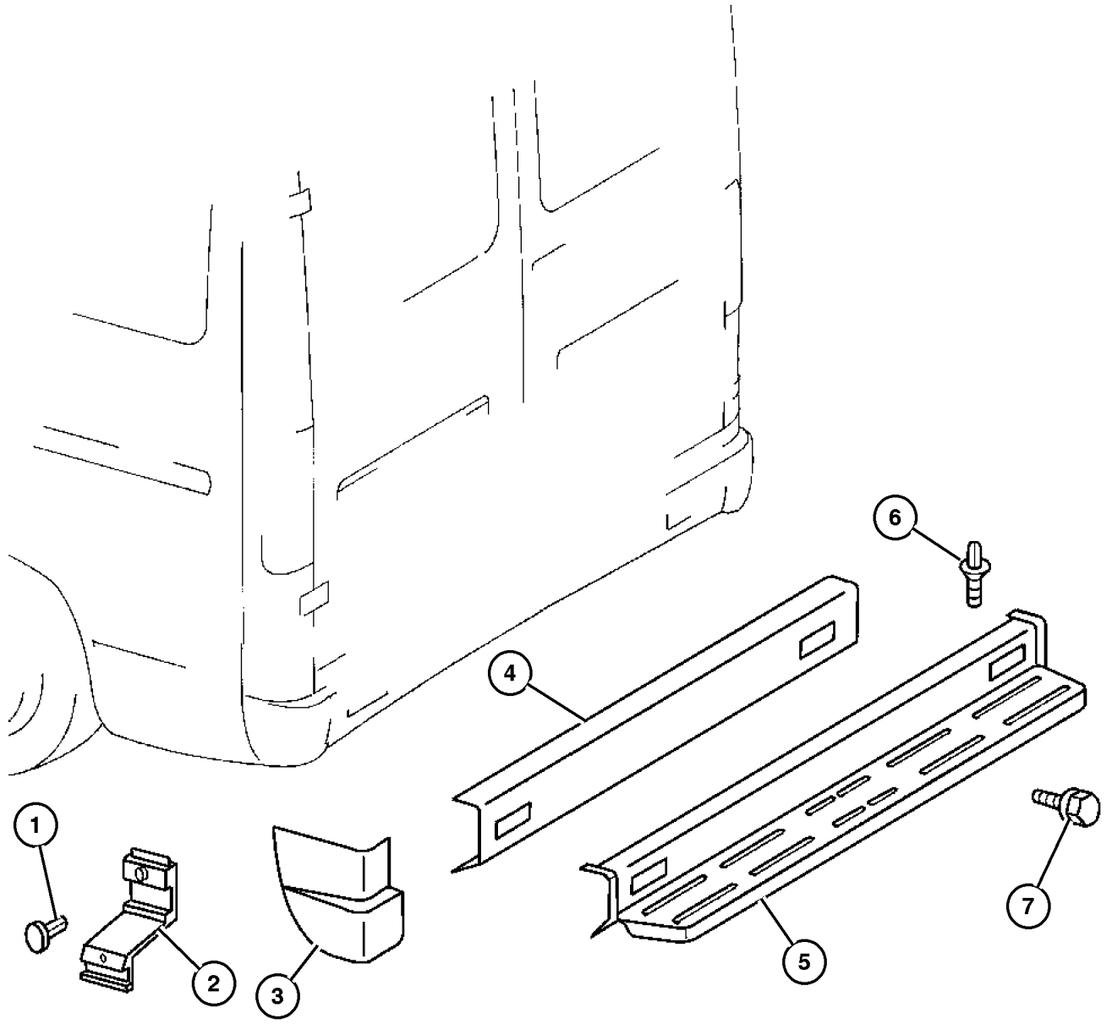

ITEM	PART NUMBER	QTY	LINE	SERIES	BODY	ENGINE	TRANS	TRIM	DESCRIPTION
		1	3, 7	L	12, 15, 16				Right
4									BUMPER, Fascia, Rear
	5104 512AA	1	2, 6	L	11, 12, 14, 15, 16				
		1	2, 6	L	51, 52, 54, 55, 56				
		1	3, 7	L	12, 15, 16				
5									BUMPER, Fascia, Rear
	5104 526AA	1	2, 6	L	11, 12, 14, 15, 16				[MBZ]
		1	2, 6	L	51, 52, 54, 55, 56				[MBZ]
		1	3, 7	L	12, 15, 16				[MBZ]
6									RIVET
	5103 730AA	4	2, 6	L	11, 12, 14, 15, 16				
		4	2, 6	L	51, 52, 54, 55, 56				
		4	3, 7	L	12, 15, 16				
7									SCREW
	5103 728AA	2	2, 6	L	01, 02, 06				
		2	2, 6	L	11, 12, 14, 15, 16				
		2	2, 6	L	51, 52, 54, 55, 56				
		2	3, 7	L	02, 06				
		2	3, 7	L	12, 15, 16				
-8									BUMPER, Step
	5104 132AA-	1	2, 6	L	12, 15				[MBZ,5AE,5AF]
		1	2, 6	L	52, 55				[MBZ,5AE,5AF]
	5104 133AA-	1	2, 6	L	11, 14				[MBZ,5AC]

Refer to Model Legend Information Bookmark

Bumper, Rear
Figure 013-320

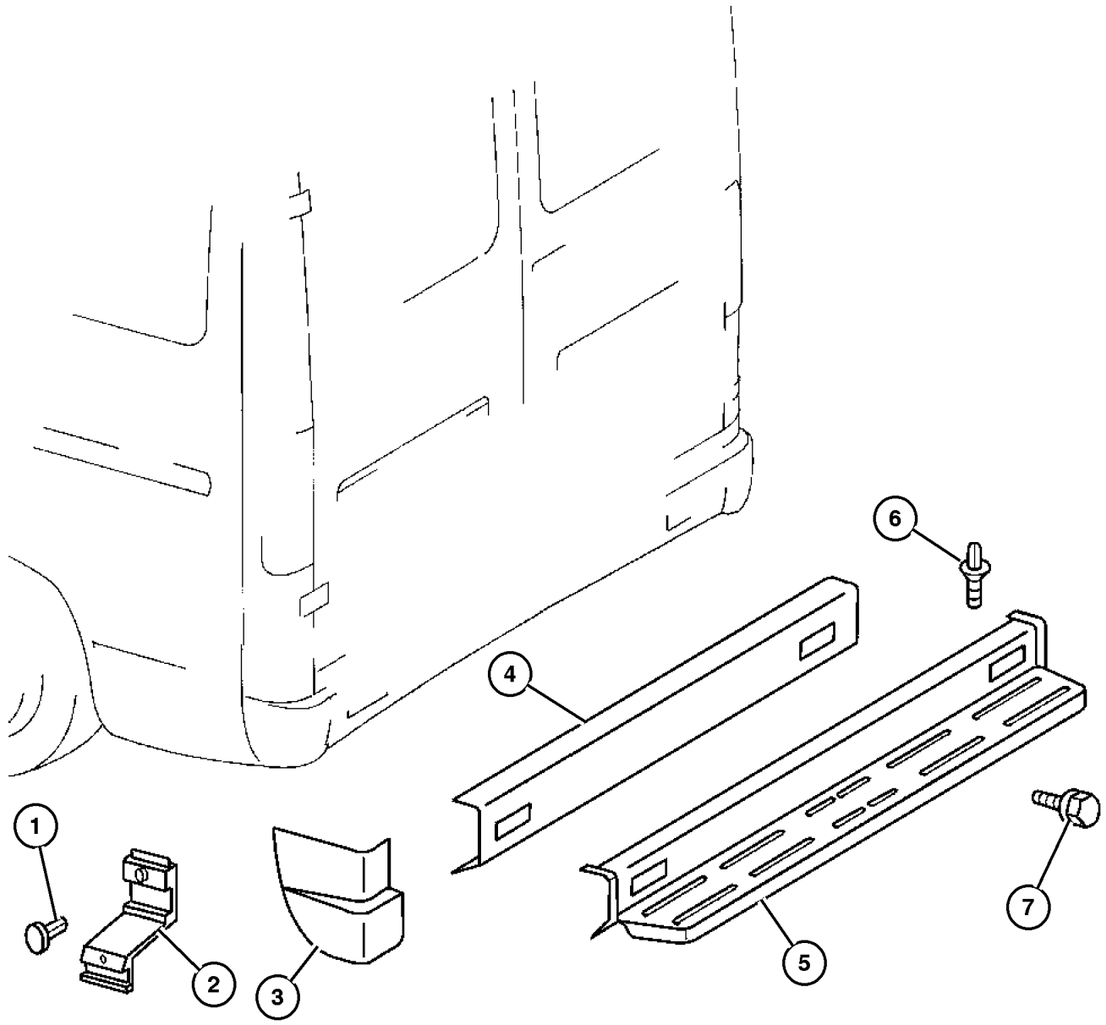

ITEM	PART NUMBER	QTY	LINE	SERIES	BODY	ENGINE	TRANS	TRIM	DESCRIPTION
		1	2, 6	L	51, 54				[MBZ,5AC]
	5104 135AA-	1	2, 6	L	16				[MKB]
		1	2, 6	L	56				[MKB]
	5120 038AA-	1	3, 7	L	12, 15				[MBZ,5AE]
	5120 040AA-	1	3, 7	L	16				[MBZ,5AF]
	5129 550AA-	1	2, 6	L	11, 14				[MBZ,5AC,XAF]
		1	2, 6	L	51, 54				[MBZ,5AC,XAF]
-9	5120 057AA-	1	3, 7	L	02, 06				GUARD, Bumper

Refer to Model Legend Information Bookmark

AR = Use as required - = Non illustrated part # = New this model year

March 3, 2006

« RETURN TO GROUP INDEX

Rear Hitch
Figure 013-610

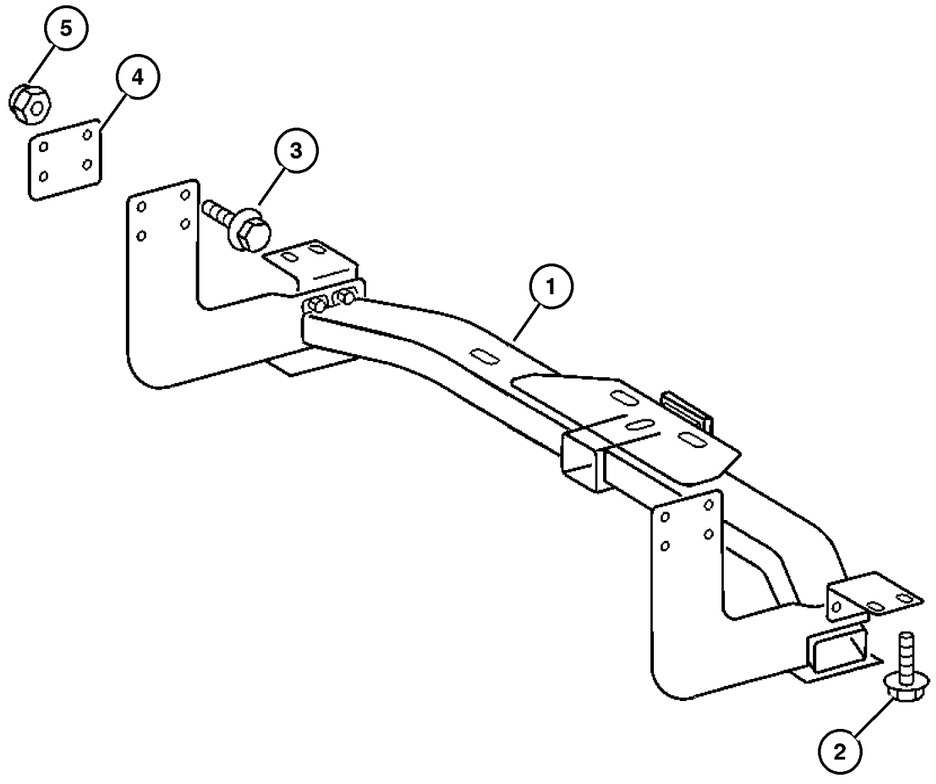

ITEM	PART NUMBER	QTY	LINE	SERIES	BODY	ENGINE	TRANS	TRIM	DESCRIPTION
1									SUPPORT, Hitch
	5104 057AA	1	2, 6	L	12, 15				
		1	2, 6	L	52, 55				
		1	3, 7	L	16				
	5128 441AA	1	2, 6	L	11, 14				
		1	2, 6	L	51, 54				
2									BOLT, Hex Flange Head, M10x1. 50x25
	6104 215AA	2	2, 6	L	11, 12,				
					14, 15, 16				
		2	2, 6	L	51, 52, 54, 55, 56				
		2	2, 6	L	01, 02, 06				
		4	3, 7	L	12, 15, 16				
		2	3, 7	L	02, 06				
3									SCREW
	5103 604AA	1	2, 6	L	01, 02, 06				
		1	2, 6	L	11, 12, 14, 15, 16				
		1	2, 6	L	51, 52, 54, 55, 56				
		1	3, 7	L	02, 06				
		1	3, 7	L	12, 15, 16				
4									PLATE, Towing Mounting
	5104 056AA	2	2, 6	L	01, 02, 06				
		2	2, 6	L	11, 12, 14, 15, 16				
		2	2, 6	L	51, 52, 54, 55, 56				
		2	3, 7	L	02, 06				
		2	3, 7	L	12, 15, 16				
5									NUT

Refer to Model Legend Information Bookmark

AR = Use as required - = Non illustrated part # = New this model year

March 3, 2006

« RETURN TO GROUP INDEX

»

Rear Hitch
Figure 013-610

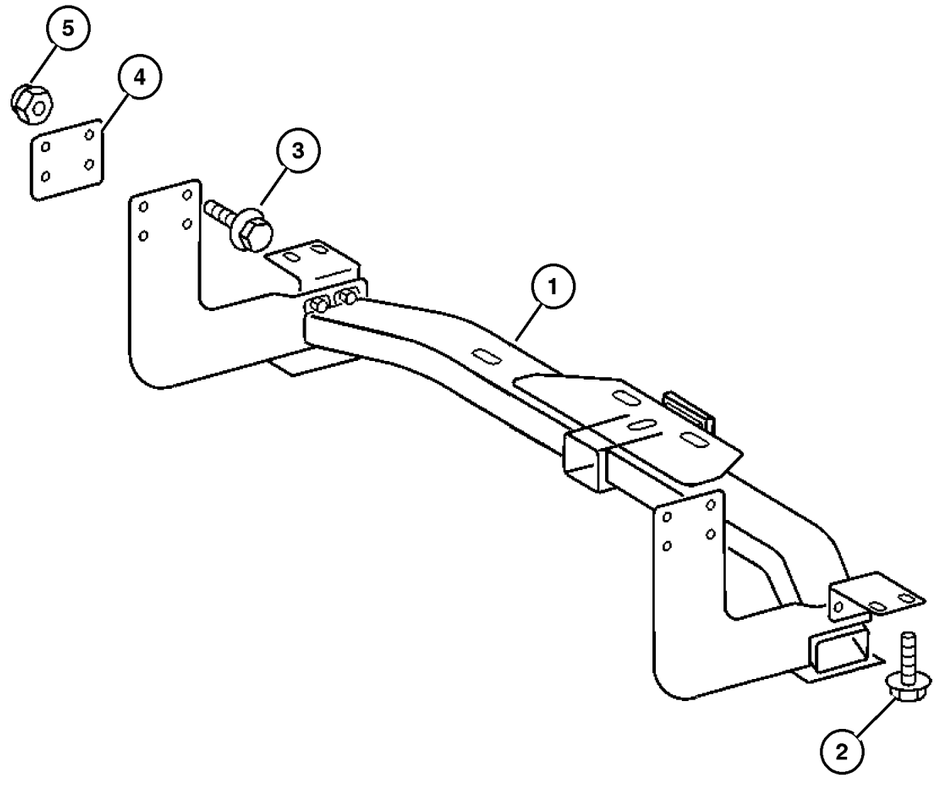

ITEM	PART NUMBER	QTY	LINE	SERIES	BODY	ENGINE	TRANS	TRIM	DESCRIPTION
	5103 668AA	1	2, 6	L	11, 12, 14, 15, 16				
		1	2, 6	L	51, 52, 54, 55, 56				
	6104 718AA	2	2, 6	L	51, 52, 54, 55, 56				
		8	2, 6	L	01, 02, 06				
		8	2, 6	L	11, 12, 14, 15, 16				
		8	3, 7	L	02, 06				
		8	3, 7	L	12, 15, 16				

Refer to Model Legend Information Bookmark

Trailer Tow
Figure 013-620

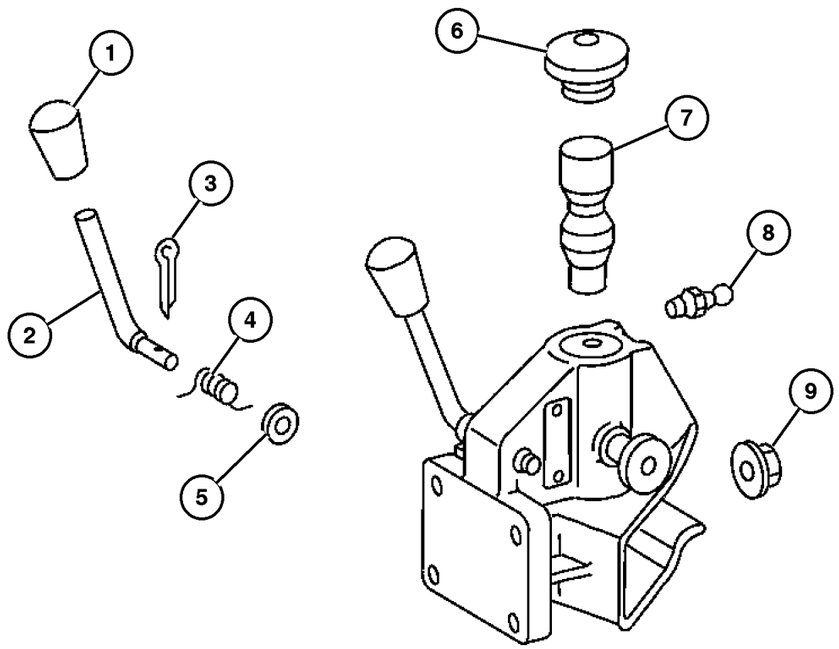

ITEM	PART NUMBER	QTY	LINE	SERIES	BODY	ENGINE	TRANS	TRIM	DESCRIPTION
1									HANDLE, Latch, (NOT SERVICED) (Not Serviced)
2									LEVER
	5133 855AA	1	2, 6	L	01, 02, 06				
		1	2, 6	L	11, 12, 14, 15, 16				
		1	2, 6	L	51, 52, 54, 55, 56				
		1	3, 7	L	02, 06				
		1	3, 7	L	12, 15, 16				
3									PIN
	5133 860AA	1	2, 6	L	01, 02, 06				
		1	2, 6	L	11, 12, 14, 15, 16				
		1	2, 6	L	51, 52, 54, 55, 56				
		1	3, 7	L	02, 06				
		1	3, 7	L	12, 15, 16				
4									SPRING, Lever, (NOT SERVICED) (Not Serviced)
5									WASHER, (NOT SERVICED) (Not Serviced)
6									COVER, (NOT SERVICED) (Not Serviced)
7									PIN, Hitch
	5133 853AA	1	2, 6	L	01, 02, 06				
		1	2, 6	L	11, 12, 14, 15, 16				
		1	2, 6	L	51, 52, 54, 55, 56				
		1	3, 7	L	02, 06				
		1	3, 7	L	12, 15, 16				
8									FITTING, Grease

Refer to Model Legend Information Bookmark

Trailer Tow
Figure 013-620

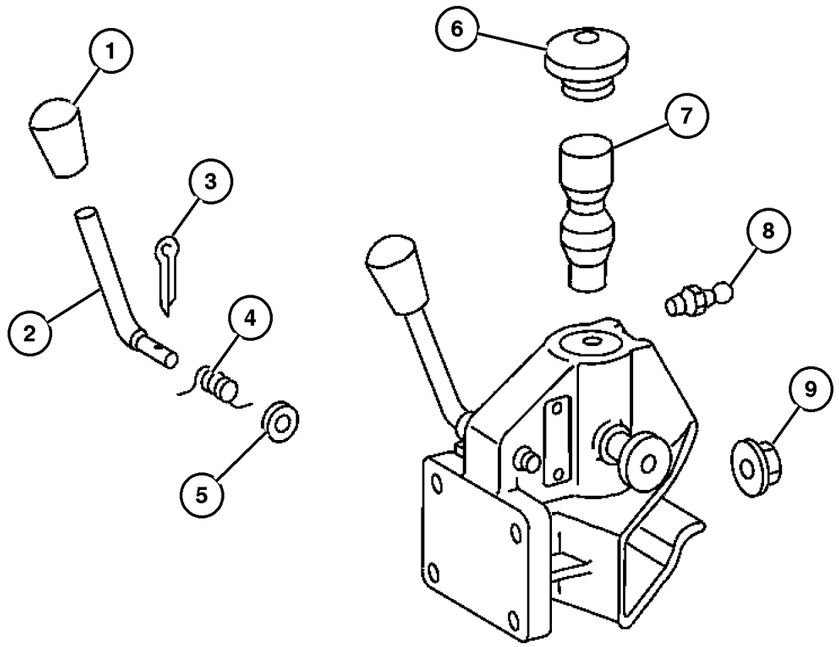

ITEM	PART NUMBER	QTY	LINE	SERIES	BODY	ENGINE	TRANS	TRIM	DESCRIPTION
	5133 858AA	1	2, 6	L	01, 02, 06				
		1	2, 6	L	11, 12, 14, 15, 16				
		1	2, 6	L	51, 52, 54, 55, 56				
		1	3, 7	L	02, 06				
		1	3, 7	L	12, 15, 16				
9	6104 717AA	4	2, 6	L	01, 02, 06				NUT
		4	2, 6	L	11, 12, 14, 15, 16				
		4	2, 6	L	51, 52, 54, 55, 56				
		4	3, 7	L	02, 06				
		4	3, 7	L	12, 15, 16				

Refer to Model Legend Information Bookmark

Group – 014
Fuel

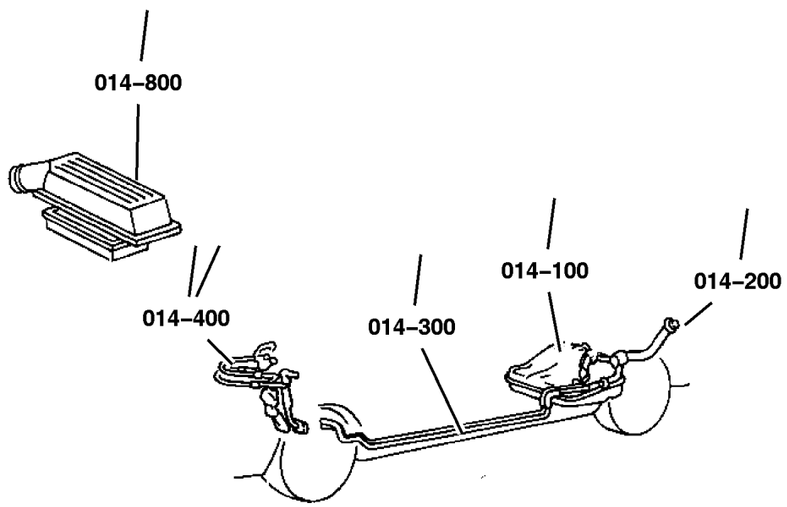

GROUP 14 - Fuel

Illustration Title — Group-Fig. No.

Tank, Fuel
Fuel Tank . . . . . Fig. 014-110

Fuel Tank Filler Tube
Fuel Tank Filler Tube . . . . . Fig. 014-210

Fuel Lines
Fuel Lines . . . . . Fig. 014-310
Fuel Line and Filter . . . . . Fig. 014-320

Fuel Rail
Injection System [EX8] . . . . . Fig. 014-410

Fuel Pump and Sending Unit
Fuel Module . . . . . Fig. 014-510

Fuel Injection Pump & Turbo Charger
Fuel Injection Pump [EX8] . . . . . Fig. 014-610
Turbo Charger . . . . . Fig. 014-630

Air Cleaner
Air Cleaner . . . . . Fig. 014-810

Accelerator Pedal
Accelerator Pedal . . . . . Fig. 014-1110

014–100 Tank, Fuel 	**014–200** Fuel Tank Filler Tube 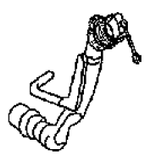	**014–300** Fuel Lines 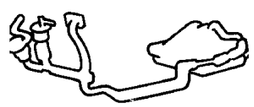	**014–400** Fuel Rail 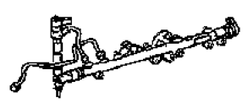
014–500 Fuel Pump and Sending Unit 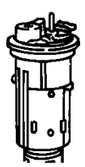	**014–600** Fuel Injection Pump & Turbo Charger 	**014–800** Air Cleaner 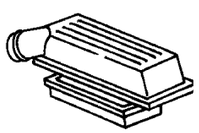	**014–1100** Accelerator Pedal

Fuel Tank
Figure 014-110

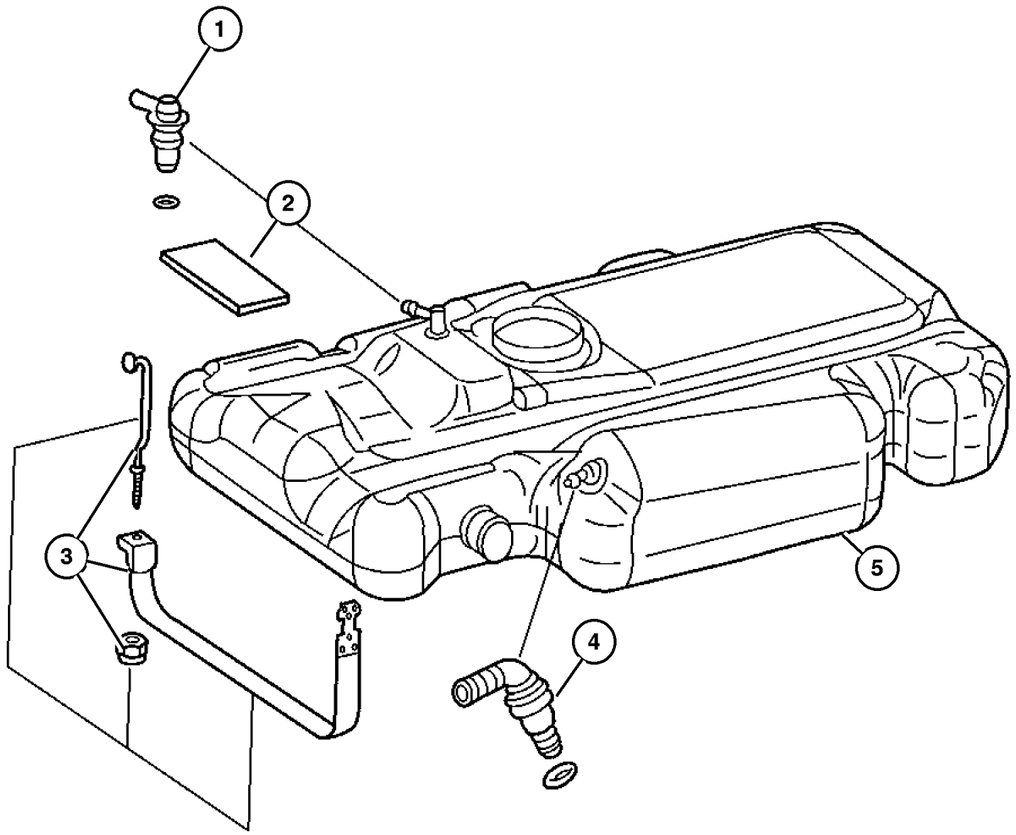

ITEM	PART NUMBER	QTY	LINE	SERIES	BODY	ENGINE	TRANS	TRIM	DESCRIPTION
Sales Codes:EX8=ENGINE-2.7L I5 MERCEDES TURBO									
DGJ=TRANSMISSION - 5-SPD AUTO									
1									VALVE, Vent
	5133 917AA	1	3, 7	L	02, 06	EX8	DGZ		
		1	3, 7	L	12, 15, 16	EX8	DGZ		
2									PAD
	5133 443AA	4	2, 6	L	01, 02, 06	EX8	DGZ		
		5	2, 6	L	11, 12, 14, 15, 16	EX8	DGZ		
		4	2, 6	L	51, 52, 54, 55, 56	EX8	DGZ		
		1	3, 7	L	02, 06	EX8	DGZ		
		5	3, 7	L	12, 15, 16	EX8	DGZ		
3									STRAP, Fuel Tank
	5104 102AA	2	2, 6	L	01, 02, 06	EX8	DGZ		
		2	2, 6	L	11, 12, 14, 15, 16	EX8	DGZ		
		2	2, 6	L	51, 52, 54, 55, 56	EX8	DGZ		
		2	3, 7	L	02, 06	EX8	DGZ		
		2	3, 7	L	12, 15, 16	EX8	DGZ		
4									VALVE, Vent
	5133 918AA	1	3, 7	L	02, 06	EX8	DGZ		
		1	3, 7	L	12, 15, 16	EX8	DGZ		
5									TANK, Fuel
	5119 634AB	1	2, 6	L	01, 02, 06	EX8	DGZ		
		1	2, 6	L	11, 12, 14, 15, 16	EX8	DGZ		
		1	2, 6	L	51, 52, 54, 55, 56	EX8	DGZ		
		1	3, 7	L	02, 06	EX8	DGZ		

Refer to Model Legend Information Bookmark

AR = Use as required - = Non illustrated part # = New this model year

March 3, 2006

« RETURN TO GROUP INDEX

»

Fuel Tank
Figure 014-110

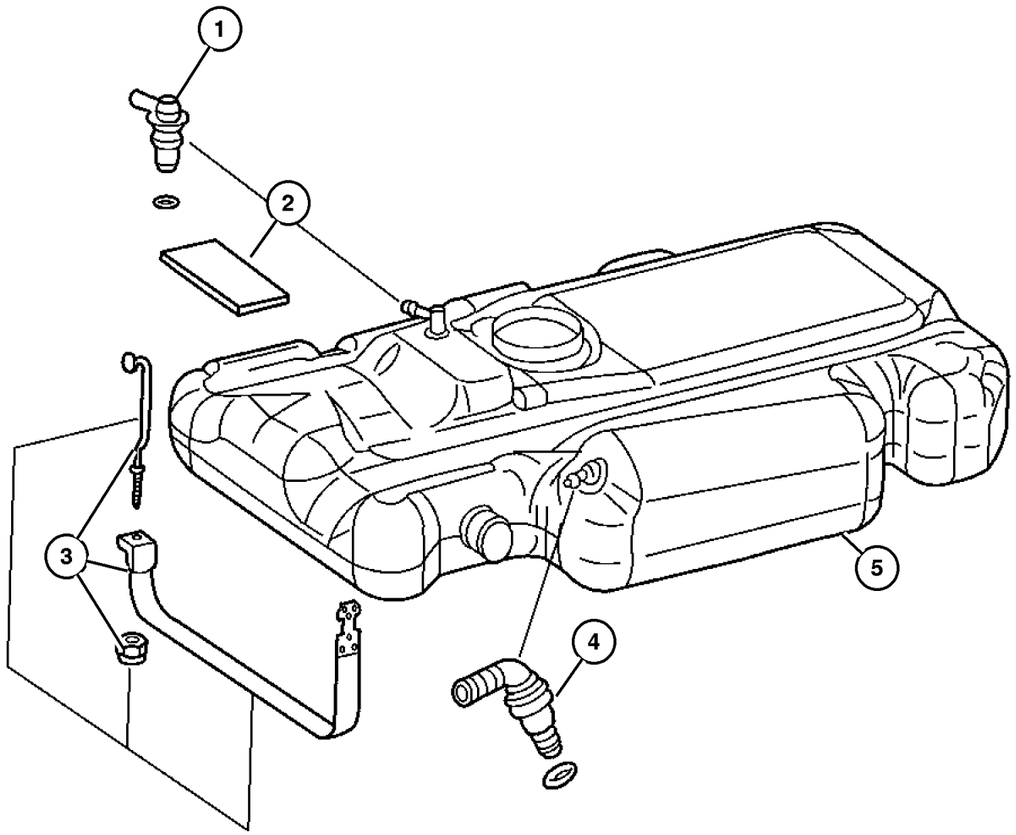

ITEM	PART NUMBER	QTY	LINE	SERIES	BODY	ENGINE	TRANS	TRIM	DESCRIPTION
		1	3, 7	L	12, 15, 16	EX8	DGZ		

Refer to Model Legend Information Bookmark

Fuel Tank Filler Tube
Figure 014-210

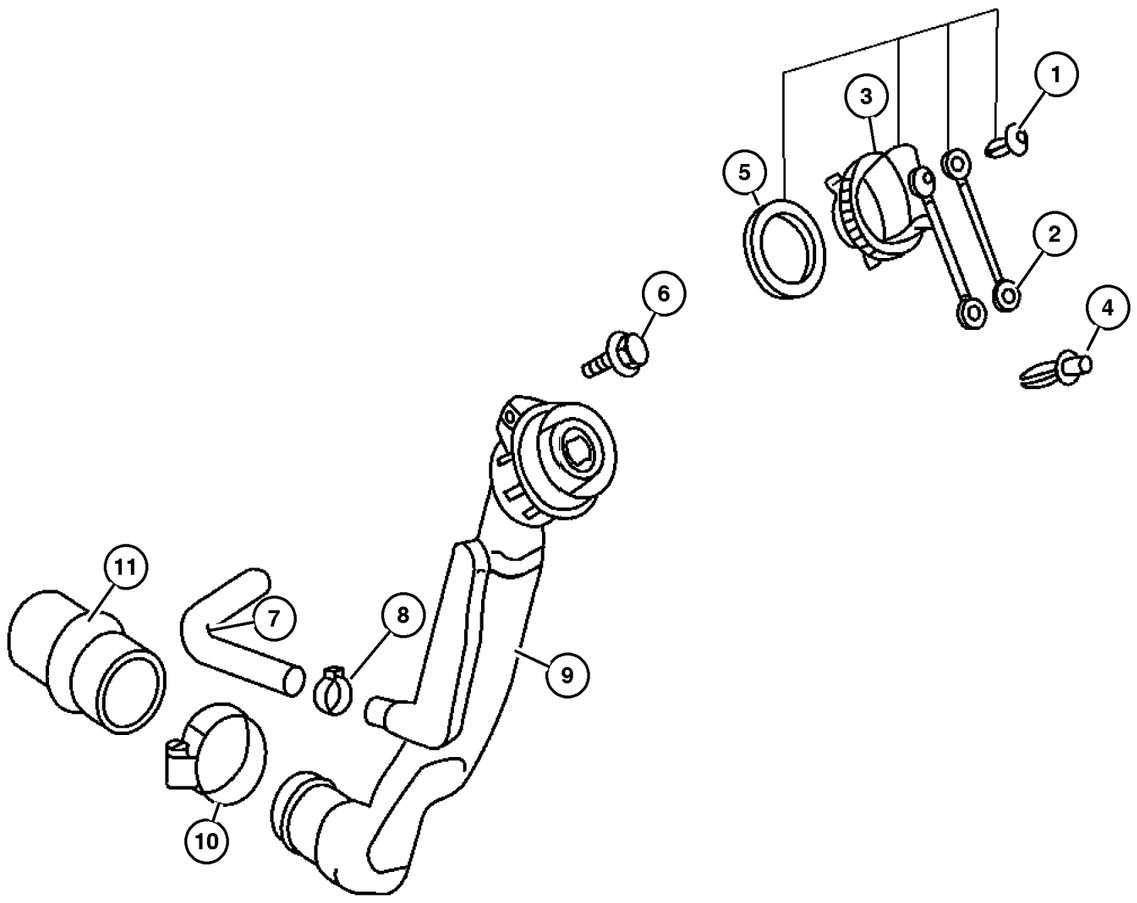

ITEM	PART NUMBER	QTY	LINE	SERIES	BODY	ENGINE	TRANS	TRIM	DESCRIPTION
Sales Codes:EX8=ENGINE-2.7L I5 MERCEDES TURBO									
DGJ=TRANSMISSION - 5-SPD AUTO									
1									RIVET
	6104 903AA	1	3, 7	L	02, 06	EX8	DGZ		
		1	3, 7	L	12, 15, 16	EX8	DGZ		
2									TETHER, Fuel Filler Cap
	5133 915AA	1	2, 6	L	01, 02, 06	EX8	DGZ		
		1	2, 6	L	11, 12, 14, 15, 16	EX8	DGZ		
		1	2, 6	L	51, 52, 54, 55, 56	EX8	DGZ		
		1	3, 7	L	02, 06	EX8	DGZ		
		1	3, 7	L	12, 15, 16	EX8	DGZ		
3									CAP, Fuel Filler
	5119 573AA	1	2, 6	L	01, 02, 06	EX8	DGZ		
		1	2, 6	L	11, 12, 14, 15, 16	EX8	DGZ		
		1	2, 6	L	51, 52, 54, 55, 56	EX8	DGZ		
		1	3, 7	L	02, 06	EX8	DGZ		
		1	3, 7	L	12, 15, 16	EX8	DGZ		
4									RIVET
	5103 787AA	1	2, 6	L	01, 02, 06	EX8	DGZ		
		1	2, 6	L	11, 12, 14, 15, 16	EX8	DGZ		
		1	2, 6	L	51, 52, 54, 55, 56	EX8	DGZ		
		1	3, 7	L	02, 06	EX8	DGZ		
		1	3, 7	L	12, 15, 16	EX8	DGZ		
5									SEAL, Fuel Cap
	5133 916AA	1	3, 7	L	02, 06	EX8	DGZ		

Refer to Model Legend Information Bookmark

Fuel Tank Filler Tube
Figure 014-210

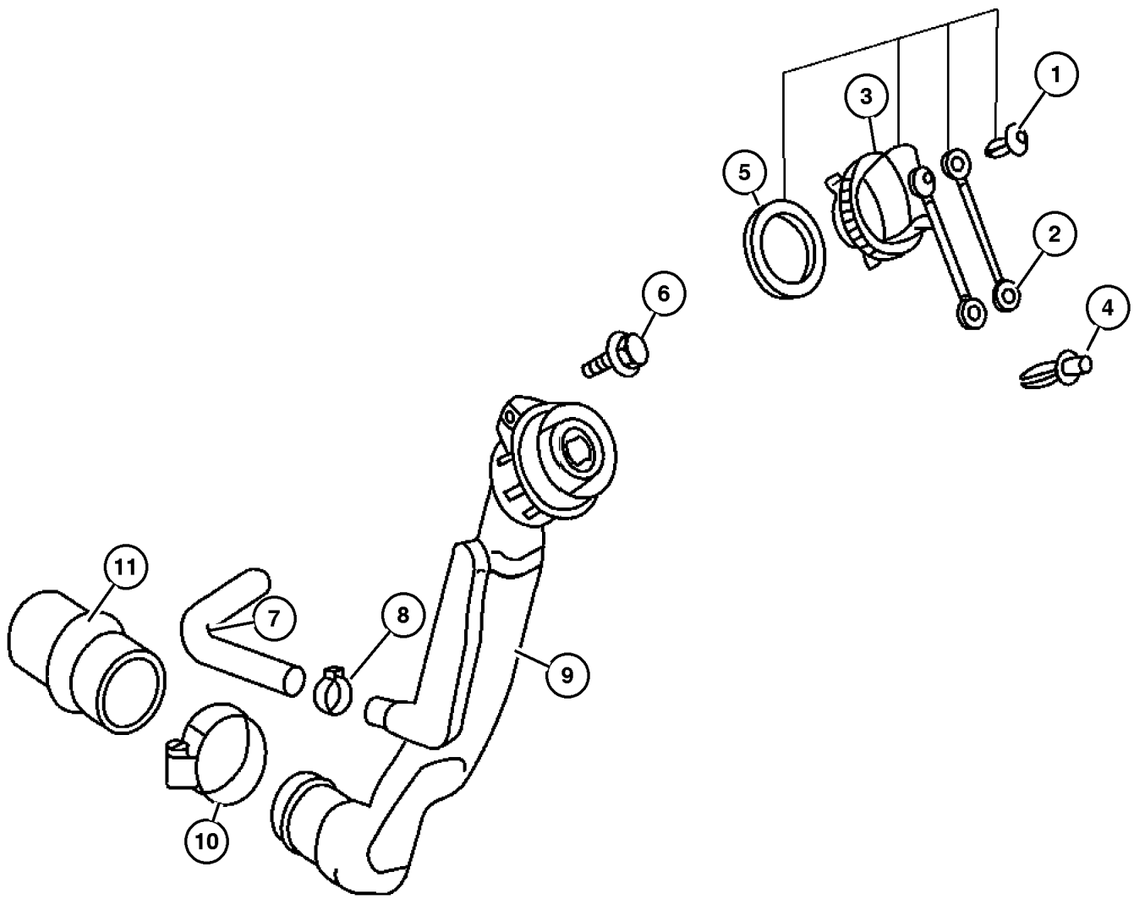

ITEM	PART NUMBER	QTY	LINE	SERIES	BODY	ENGINE	TRANS	TRIM	DESCRIPTION
		1	3, 7	L	12, 15, 16	EX8	DGZ		
6	6104 515AA	1	2, 6	L	01, 02, 06	EX8	DGZ		SCREW, Fuel Filler Tube Mounting
		1	2, 6	L	11, 12, 14, 15, 16	EX8	DGZ		
		1	2, 6	L	51, 52, 54, 55, 56	EX8	DGZ		
		1	3, 7	L	02, 06	EX8	DGZ		
		1	3, 7	L	12, 15, 16	EX8	DGZ		
7	5135 343AA	1	2, 6	L	01, 02, 06	EX8	DGZ		HOSE, Fuel Filler
		1	2, 6	L	11, 12, 14, 15, 16	EX8	DGZ		
		1	2, 6	L	51, 52, 54, 55, 56	EX8	DGZ		
		1	3, 7	L	02, 06	EX8	DGZ		
		1	3, 7	L	12, 15, 16	EX8	DGZ		
8	6104 780AA	2	2, 6	L	51, 52, 54, 55, 56	EX8	DGZ		CLAMP
		1	2, 6	L	01, 02, 06	EX8	DGZ		
		1	2, 6	L	11, 12, 14, 15, 16	EX8	DGZ		
		2	3, 7	L	12, 15, 16	EX8	DGZ		
		1	3, 7	L	02, 06	EX8	DGZ		
9	5104 103AA	1	2, 6	L	01, 02, 06	EX8	DGZ		TUBE, Fuel Filler
		1	2, 6	L	11, 12, 14, 15, 16	EX8	DGZ		

Refer to Model Legend Information Bookmark

AR = Use as required - = Non illustrated part # = New this model year

March 3, 2006

« RETURN TO GROUP INDEX

Fuel Tank Filler Tube
Figure 014-210

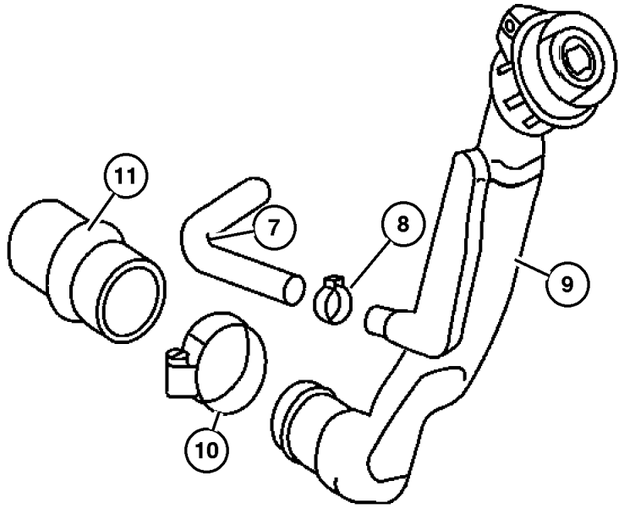

ITEM	PART NUMBER	QTY	LINE	SERIES	BODY	ENGINE	TRANS	TRIM	DESCRIPTION
		1	2, 6	L	51, 52, 54, 55, 56	EX8	DGZ		
		1	3, 7	L	02, 06	EX8	DGZ		
		1	3, 7	L	12, 15, 16	EX8	DGZ		
10									CLAMP, Hose
	5104 601AA	1	2, 6	L	11, 12, 14, 15, 16	EX8	DGZ		
		1	2, 6	L	51, 52, 54, 55, 56	EX8	DGZ		
		1	2, 6	L	01, 02, 06	EX8	DGZ		
		1	3, 7	L	12, 15, 16	EX8	DGZ		
		1	3, 7	L	02, 06	EX8	DGZ		
11	5103 986AA	1	2, 3, 6, 7	L		EX8	DGZ		HOSE

Refer to Model Legend Information Bookmark

AR = Use as required - = Non illustrated part # = New this model year

March 3, 2006

« RETURN TO GROUP INDEX

Fuel Lines
Figure 014-310

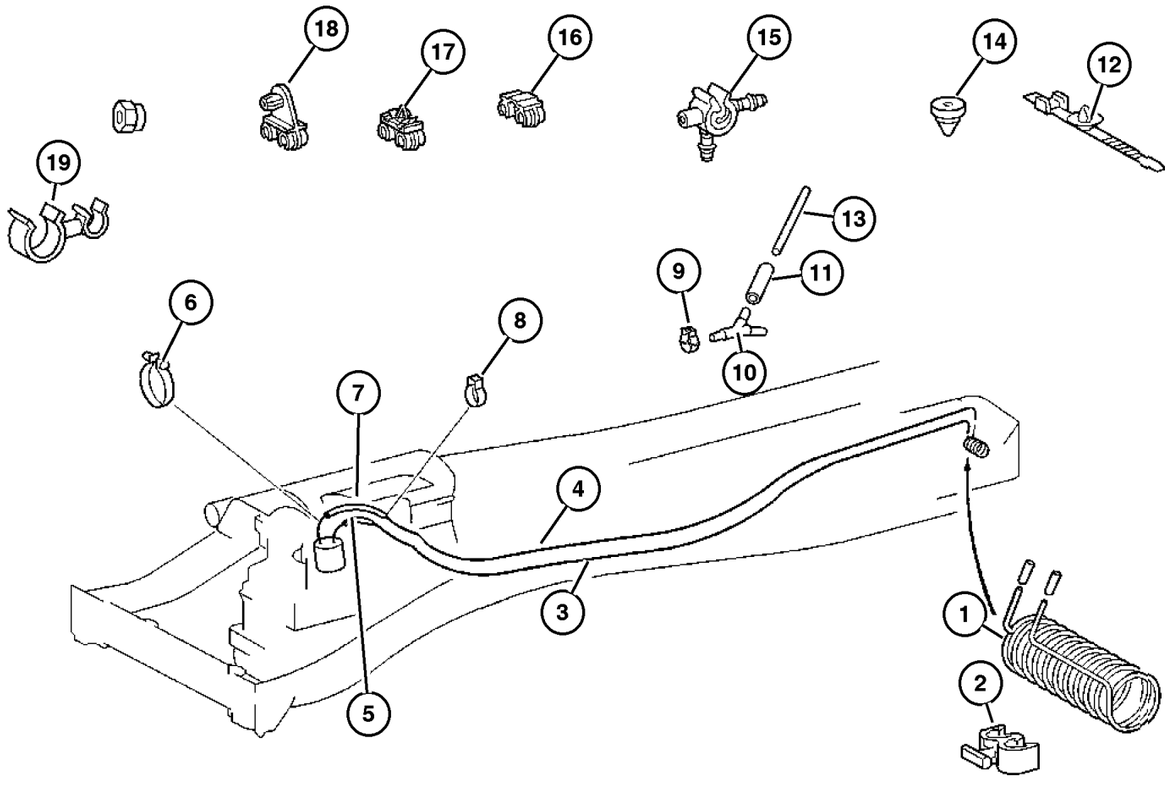

ITEM	PART NUMBER	QTY	LINE	SERIES	BODY	ENGINE	TRANS	TRIM	DESCRIPTION
1									COOLER, Fuel, Diesel
	5127 509AA	1	2, 6	L	01, 02, 06	EX8	DGZ		
		1	2, 6	L	11, 12, 14, 15, 16	EX8	DGZ		
		1	2, 6	L	51, 52, 54, 55, 56	EX8	DGZ		
		1	3, 7	L	02, 06	EX8	DGZ		
		1	3, 7	L	12, 15, 16	EX8	DGZ		
2									CLIP, Fuel Line
	5119 698AA	3	2, 6	L	01, 02, 06	EX8	DGZ		
		3	2, 6	L	11, 12, 14, 15, 16	EX8	DGZ		
		3	2, 6	L	51, 52, 54, 55, 56	EX8	DGZ		
		3	3, 7	L	02, 06	EX8	DGZ		
		3	3, 7	L	12, 15, 16	EX8	DGZ		
3									TUBE, Fuel Supply
	5119 646AA	1	2, 6	L	01, 02, 06	EX8	DGZ		
		1	2, 6	L	11, 12, 14, 15, 16	EX8	DGZ		
		1	2, 6	L	51, 52, 54, 55, 56	EX8	DGZ		
		1	3, 7	L	02, 06	EX8	DGZ		
		1	3, 7	L	12, 15, 16	EX8	DGZ		
4									TUBE, Fuel Return Line
	5119 647AA	1	2, 6	L	01, 02, 06	EX8	DGZ		
		1	2, 6	L	11, 12, 14, 15, 16	EX8	DGZ		
		1	2, 6	L	51, 52, 54, 55, 56	EX8	DGZ		

Refer to Model Legend Information Bookmark

Fuel Lines
Figure 014-310

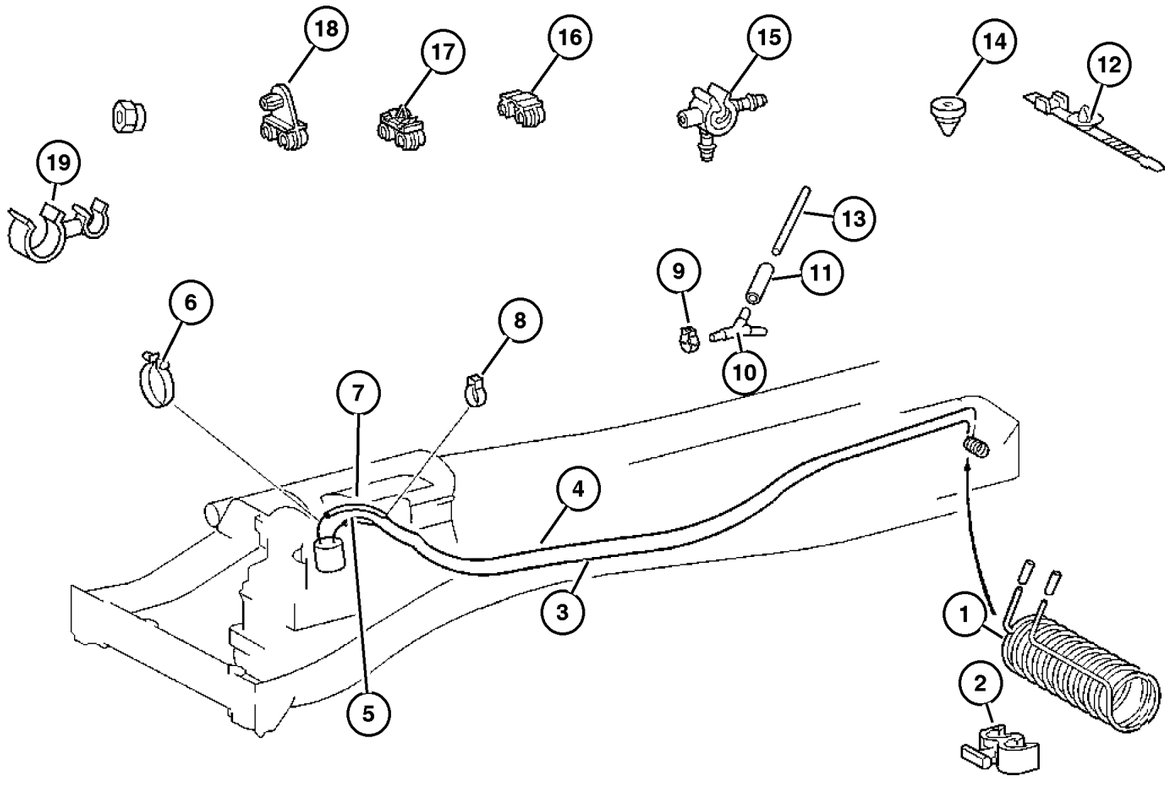

ITEM	PART NUMBER	QTY	LINE	SERIES	BODY	ENGINE	TRANS	TRIM	DESCRIPTION
		1	3, 7	L	02, 06	EX8	DGZ		
		1	3, 7	L	12, 15, 16	EX8	DGZ		
5	5137 327AA	1	2, 3, 6, 7	L		EX8	DGZ		TUBE, Fuel
6									CLAMP, Hose
	6104 822AA	8	2, 6	L	01, 02, 06	EX8	DGZ		
		8	2, 6	L	11, 12, 14, 15, 16	EX8	DGZ		
		8	2, 6	L	51, 52, 54, 55, 56	EX8	DGZ		
		8	3, 7	L	02, 06	EX8	DGZ		
		8	3, 7	L	12, 15, 16	EX8	DGZ		
7									HOSE, (NOT REQUIRED)
8									CLAMP, Hose
	5126 025AA	2	2, 6	L	01, 02, 06	EX8	DGZ		
		2	2, 6	L	11, 12, 14, 15, 16	EX8	DGZ		
		1	2, 6	L	51, 52, 54, 55, 56	EX8	DGZ		
		1	3, 7	L	02, 06	EX8	DGZ		
		1	3, 7	L	12, 15, 16	EX8	DGZ		
9									CLAMP, Hose
	5126 025AA	1	2, 6	L	01, 02, 06	EX8	DGZ		
		2	2, 6	L	11, 12, 14, 15, 16	EX8	DGZ		
		1	2, 6	L	51, 52, 54, 55, 56	EX8	DGZ		
		1	3, 7	L	02, 06	EX8	DGZ		
		1	3, 7	L	12, 15, 16	EX8	DGZ		
10									CONNECTOR, Fuel Line
	5133 920AA	1	2, 6	L	01, 02, 06	EX8	DGZ		

Refer to Model Legend Information Bookmark

AR = Use as required - = Non illustrated part # = New this model year

March 3, 2006

« RETURN TO GROUP INDEX

Fuel Lines
Figure 014-310

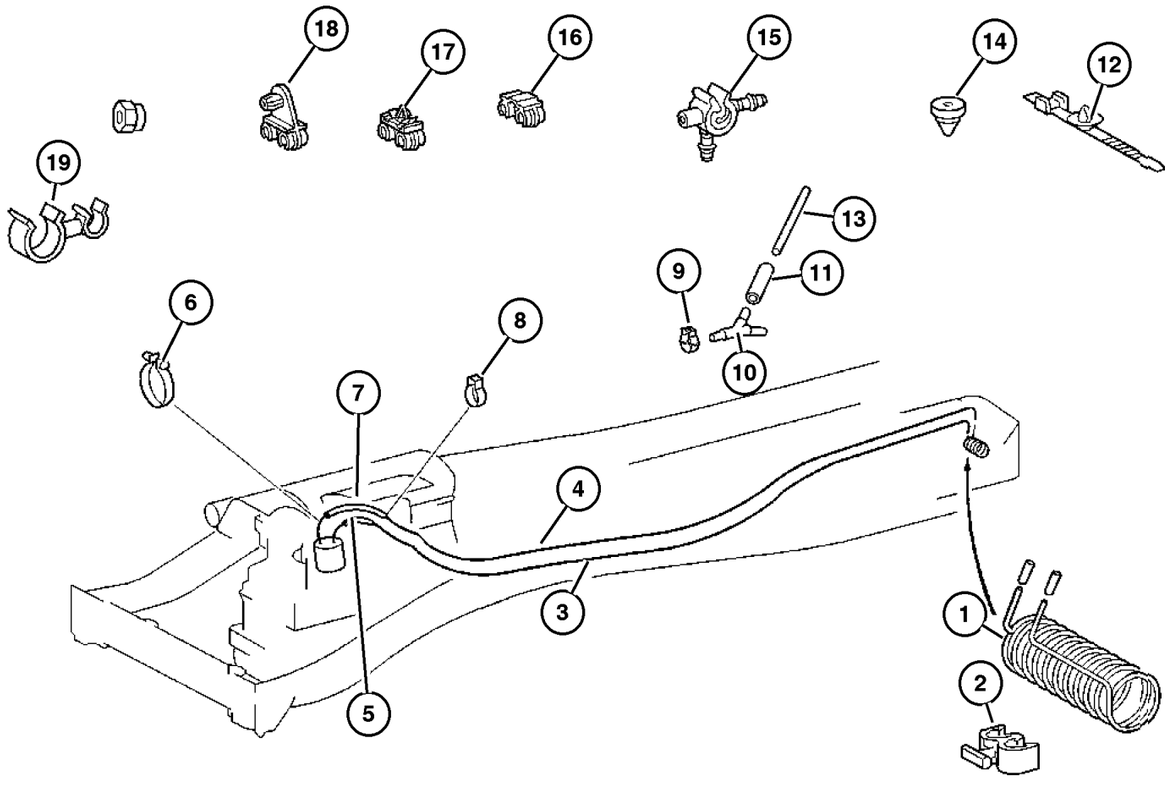

ITEM	PART NUMBER	QTY	LINE	SERIES	BODY	ENGINE	TRANS	TRIM	DESCRIPTION
		1	2, 6	L	11, 12, 14, 15, 16	EX8	DGZ		
		1	2, 6	L	51, 52, 54, 55, 56	EX8	DGZ		
11	5133 919AB	1	2, 6	L	01, 02, 06	EX8	DGZ		HOSE
		1	2, 6	L	11, 12, 14, 15, 16	EX8	DGZ		
		1	2, 6	L	51, 52, 54, 55, 56	EX8	DGZ		
12	5126 078AA	1	2, 6	L	01, 02, 06	EX8	DGZ		TIE STRAP, Push In
		1	2, 6	L	11, 12, 14, 15, 16	EX8	DGZ		
		1	2, 6	L	51, 52, 54, 55, 56	EX8	DGZ		
		1	3, 7	L	02, 06	EX8	DGZ		
		1	3, 7	L	12, 15, 16	EX8	DGZ		
13	5133 633AA	100	2, 6	L	01, 02, 06	EX8	DGZ		PIPE, Fuel
		100	2, 6	L	11, 12, 14, 15, 16	EX8	DGZ		
		100	2, 6	L	51, 52, 54, 55, 56	EX8	DGZ		
14	5125 501AA	2	2, 6	L	01, 02, 06	EX8	DGZ		BUMPER, Rubber
		2	2, 6	L	11, 12, 14, 15, 16	EX8	DGZ		
		2	2, 6	L	51, 52, 54, 55, 56	EX8	DGZ		

Refer to Model Legend Information Bookmark

AR = Use as required - = Non illustrated part # = New this model year

March 3, 2006

Fuel Lines
Figure 014-310

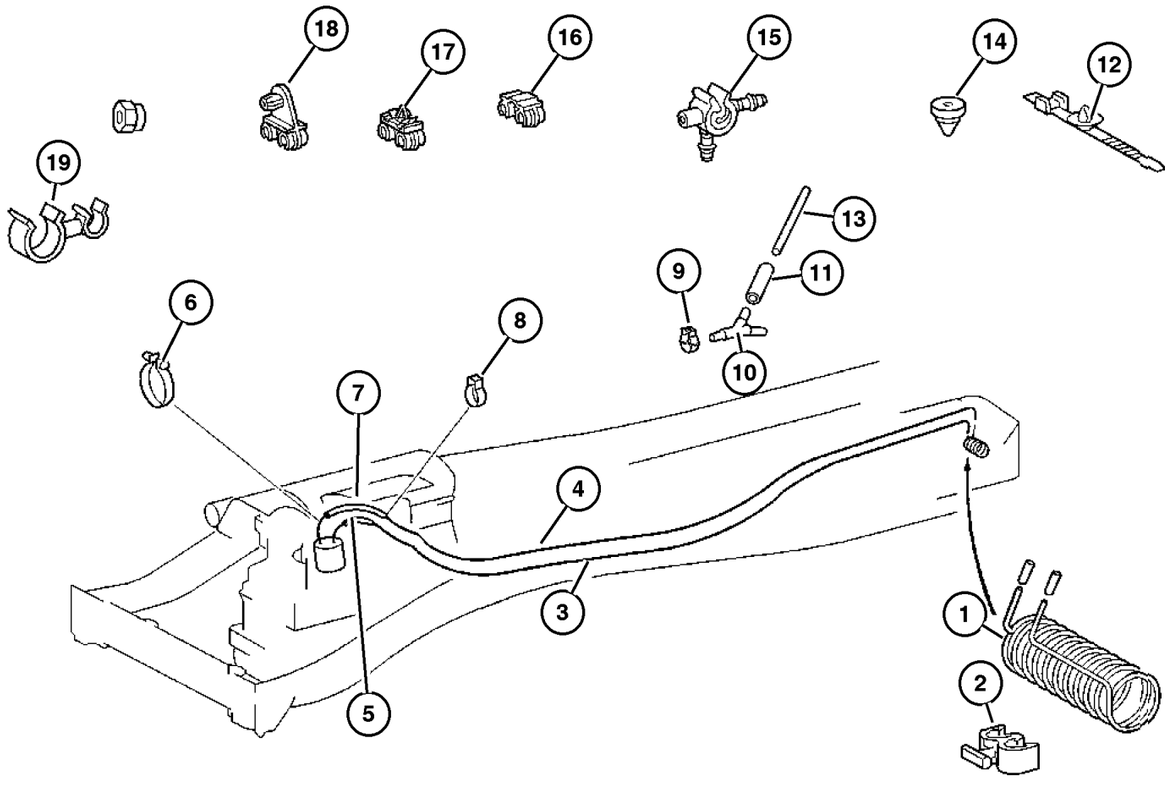

ITEM	PART NUMBER	QTY	LINE	SERIES	BODY	ENGINE	TRANS	TRIM	DESCRIPTION
		1	3, 7	L	02, 06	EX8	DGZ		
		1	3, 7	L	12, 15, 16	EX8	DGZ		
15									CLIP, Retaining
	6104 924AA	1	2, 6	L	01, 02, 06	EX8	DGZ		
		1	2, 6	L	11, 12, 14, 15, 16	EX8	DGZ		
		1	2, 6	L	51, 52, 54, 55, 56	EX8	DGZ		
		1	3, 7	L	02, 06	EX8	DGZ		
		1	3, 7	L	12, 15, 16	EX8	DGZ		
16									BRACKET, Fuel Line, (NOT REQUIRED)
17									CLIP, Fuel Line, (NOT REQUIRED)
18									BRACKET, Fuel Line, (NOT REQUIRED)
19									CLAMP
	5080 437AB	2	2, 6	L	01, 02, 06	EX8	DGZ		
		2	2, 6	L	11, 12, 14, 15, 16	EX8	DGZ		
		2	2, 6	L	51, 52, 54, 55, 56	EX8	DGZ		
		99	3, 7	L	02, 06	EX8	DGZ		
		99	3, 7	L	12, 15, 16	EX8	DGZ		

Refer to Model Legend Information Bookmark

AR = Use as required - = Non illustrated part # = New this model year

March 3, 2006

« RETURN TO GROUP INDEX

«

Fuel Line and Filter
Figure 014-320

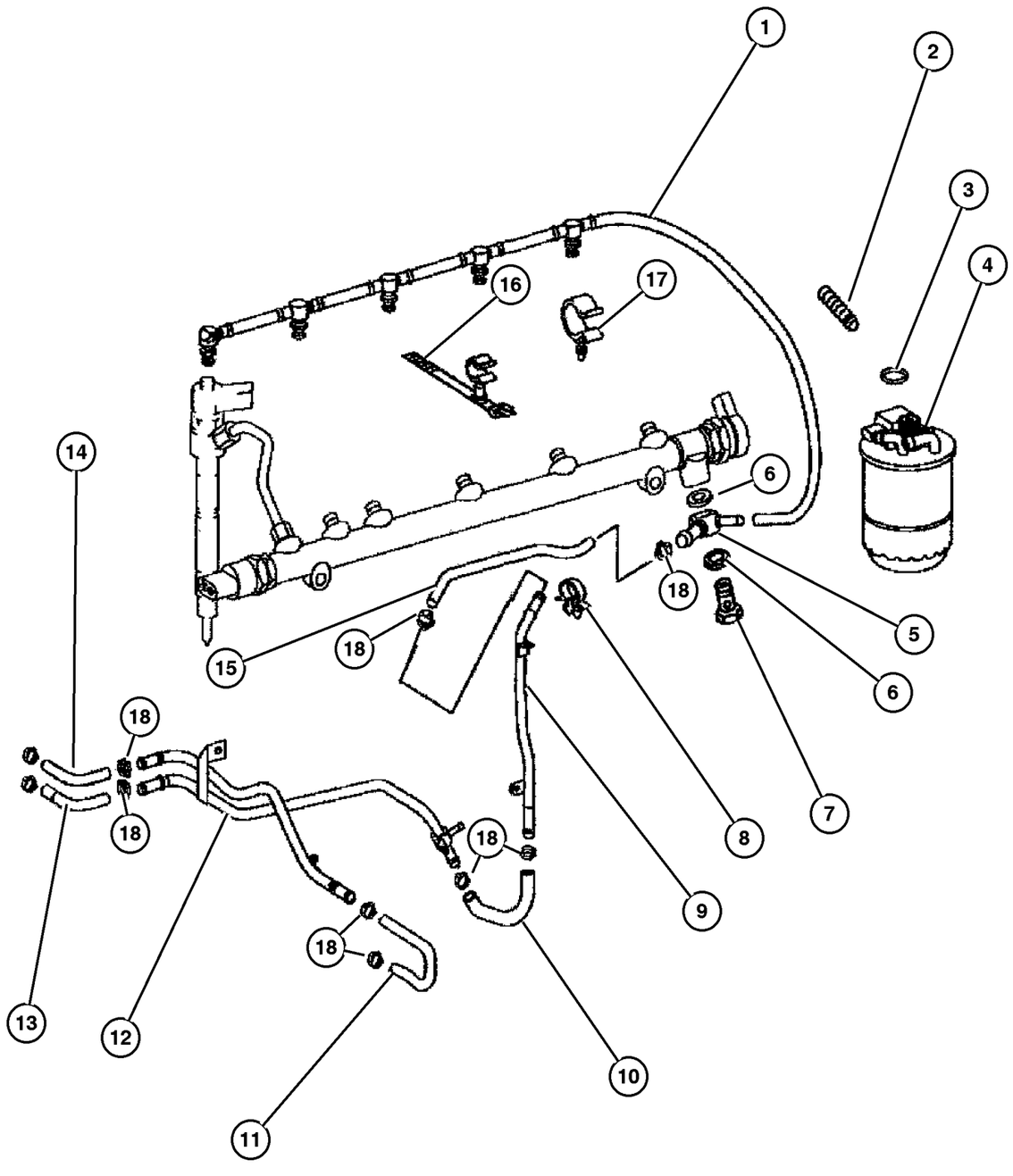

ITEM	PART NUMBER	QTY	LINE	SERIES	BODY	ENGINE	TRANS	TRIM	DESCRIPTION
1	5183 496AA	1	2, 3, 6, 7	L		EX8	DGZ		TUBE, Fuel
2	5135 867AA	900	2, 3, 6, 7	L		EX8	DGZ		INSULATOR
3	5138 876AA	1	2, 3, 6, 7	L		EX8	DGZ		O RING
4	5170 896AA	1	2, 3, 6, 7	L		EX8	DGZ		FILTER, Fuel
5	5103 977AA	1	2, 3, 6, 7	L		EX8	DGZ		UNION
6	5104 625AA	2	2, 3, 6, 7	L		EX8	DGZ		O RING
7	5080 339AA	1	2, 3, 6, 7	L		EX8	DGZ		BOLT, Banjo
8	5080 091AB	1	2, 3, 6, 7	L		EX8	DGZ		CLAMP
9	5137 327AA	1	2, 3, 6, 7	L		EX8	DGZ		TUBE, Fuel
10	5174 011AA	1	2, 3, 6, 7	L		EX8	DGZ		HOSE, Fuel, FUEL RETURN LINE
11	5137 341AB	1	2, 3, 6, 7	L		EX8	DGJ		HOSE, Fuel, FEED LINE TO FUEL FILTER
12									TUBE
	5137 341AB	1	2, 3, 6, 7	L		EX8	DGJ		
	5137 332AA	1	2, 3, 6, 7	L		EX8	DGZ		FEED LINE TO FUEL FILTER
13	5174 009AA	1	2, 3, 6, 7	L		EX8	DGZ		HOSE, Fuel, FEED/RETURN LINE TO HP PUMP
14	5174 008AA	1	2, 3, 6, 7	L		EX8	DGZ		HOSE, Fuel, FEED/RETURN LINE TO HP PUM
15	5174 010AA	1	2, 3, 6, 7	L		EX8	DGZ		HOSE, Fuel, FUEL RETURN LINE
16	5138 875AA	99	2, 3, 6, 7	L		EX8	DGJ		TIE STRAP
17									CLAMP
	5080 431AB	1	2, 6	L	01, 02, 06	EX8	DGZ		
		1	2, 6	L	11, 12, 14, 15, 16	EX8	DGZ		
		1	2, 6	L	51, 52, 54, 55, 56	EX8	DGZ		
		1	3, 7	L	02, 06	EX8	DGZ		
		1	3, 7	L	12, 15, 16	EX8	DGZ		
18									CLAMP
	5080 439AB	1	2, 6	L	01, 02, 06	EX8	DGJ		
		1	2, 6	L	11, 12, 14, 15, 16	EX8	DGJ		
		1	2, 6	L	51, 52, 54, 55, 56	EX8	DGJ		
		1	3, 7	L	02, 06	EX8	DGJ		
		1	3, 7	L	12, 15, 16	EX8	DGJ		

Refer to Model Legend Information Bookmark

AR = Use as required - = Non illustrated part # = New this model year

March 3, 2006

« RETURN TO GROUP INDEX

Injection System [EX8]
Figure 014-410

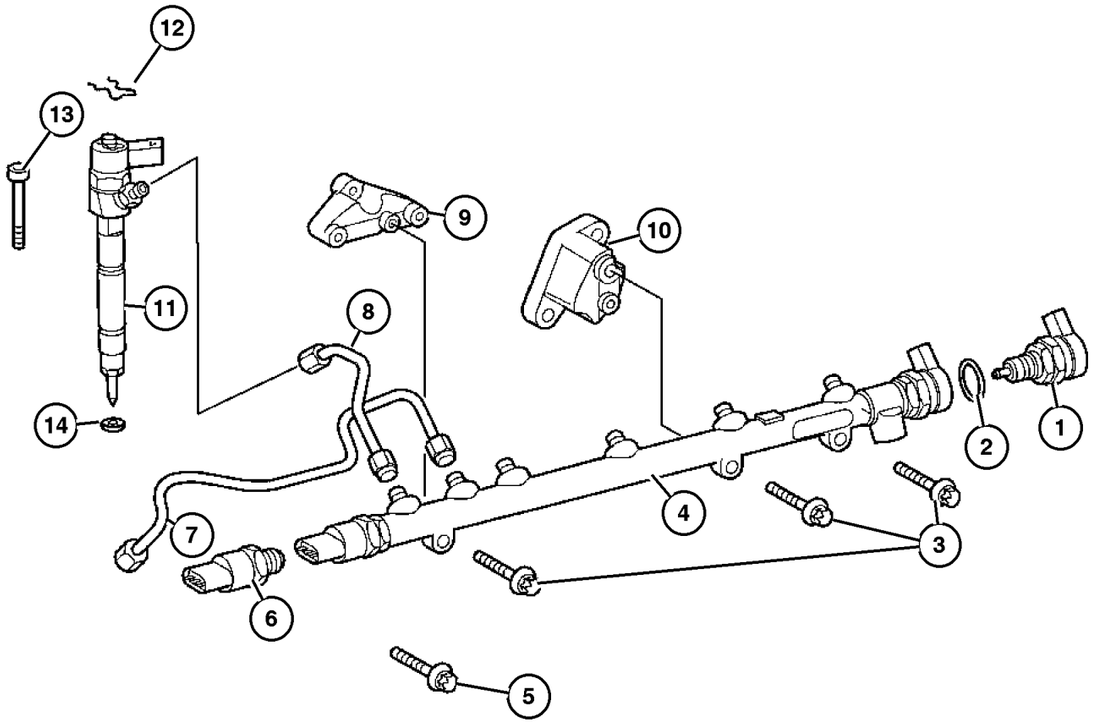

ITEM	PART NUMBER	QTY	LINE	SERIES	BODY	ENGINE	TRANS	TRIM	DESCRIPTION
Sales Codes:EX9=ENGINE-2.7L I5 MERCEDES TURBO									
DGJ=TRANSMISSION - 5-SPD AUTO									
1	5137 291AA	1	2, 3, 6, 7	L		EX8	DGZ		VALVE
2	5138 007AA	1	2, 3, 6, 7	L		EX8	DGZ		O RING
3	5073 701AA	3	2, 3, 6, 7	L		EX8	DGZ		SCREW
4	5137 290AA	1	2, 3, 6, 7	L		EX8	DGZ		RAIL, Fuel
5	5073 701AA	3	2, 3, 6, 7	L		EX8	DGZ		SCREW
6	5117 543AA	1	2, 3, 6, 7	L		EX8	DGZ		SENDING UNIT, Fuel
7	5117 421AA	1	2, 3, 6, 7	L		EX8	DGZ		TUBE, Fuel Injector Supply
8	5117 422AA	5	2, 3, 6, 7	L		EX8	DGZ		TUBE, Fuel Injector Supply
9	5117 449AA	1	2, 3, 6, 7	L		EX8	DGZ		CLIP, Fuel Injector
10	5117 450AA	1	2, 3, 6, 7	L		EX8	DGZ		CLIP, Fuel Injector
11	5137 297AA	5	2, 3, 6, 7	L		EX8	DGZ		INJECTOR, Fuel
12	5086 296AA	5	2, 3, 6, 7	L		EX8	DGZ		CLIP, Fuel Injector
13	5073 719AB	5	2, 3, 6, 7	L		EX8	DGZ		SCREW
14	5080 301AA	5	2, 3, 6, 7	L		EX8	DGZ		O RING, Fuel Injector

Refer to Model Legend Information Bookmark

Fuel Module
Figure 014-510

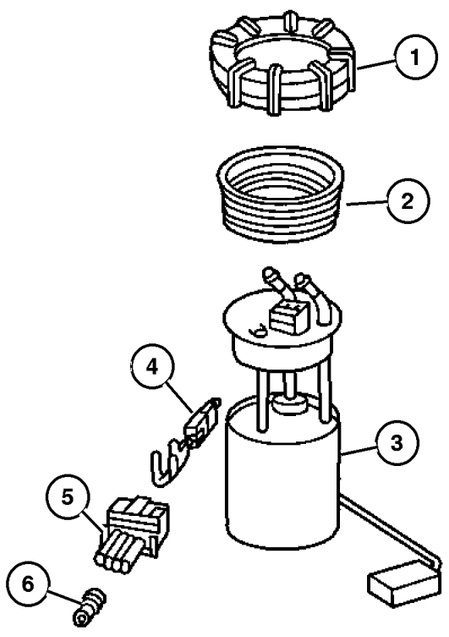

ITEM	PART NUMBER	QTY	LINE	SERIES	BODY	ENGINE	TRANS	TRIM	DESCRIPTION
Sales Codes:EX8=2.7L I5 MERCEDES-BENZ									
DGJ=TRANSMISSION - 5-SPD AUTO									
1									NUT, Fuel Pump Module
	5104 539AA	1	2, 6	L	01, 02, 06	EX8	DGZ		
		1	2, 6	L	11, 12, 14, 15, 16	EX8	DGZ		
		1	2, 6	L	51, 52, 54, 55, 56	EX8	DGZ		
		1	3, 7	L	02, 06	EX8	DGZ		
		1	3, 7	L	12, 15, 16	EX8	DGZ		
2									SEAL, Fuel Pump and Level Unit
	5119 613AA	1	2, 6	L	01, 02, 06	EX8	DGZ		
		1	2, 6	L	11, 12, 14, 15, 16	EX8	DGZ		
		1	2, 6	L	51, 52, 54, 55, 56	EX8	DGZ		
		1	3, 7	L	02, 06	EX8	DGZ		
		1	3, 7	L	12, 15, 16	EX8	DGZ		
3									MODULE, Fuel Tank - Diesel
	5119 605AA	1	2, 6	L	01, 02, 06	EX8	DGZ		
		1	2, 6	L	11, 12, 14, 15, 16	EX8	DGZ		
		1	2, 6	L	51, 52, 54, 55, 56	EX8	DGZ		
		1	3, 7	L	02, 06	EX8	DGZ		
		1	3, 7	L	12, 15, 16	EX8	DGZ		
	5119 607AA	1	2, 6	L	01, 02, 06	EX8	DGZ		With Heater Booster
		1	2, 6	L	11, 12, 14, 15, 16	EX8	DGZ		With Heater Booster

Refer to Model Legend Information Bookmark

AR = Use as required - = Non illustrated part # = New this model year

March 3, 2006

« RETURN TO GROUP INDEX

»

Fuel Module
Figure 014-510

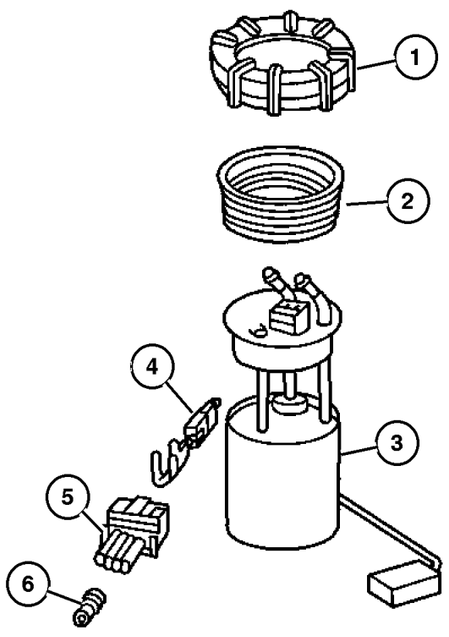

ITEM	PART NUMBER	QTY	LINE	SERIES	BODY	ENGINE	TRANS	TRIM	DESCRIPTION
		1	2, 6	L	51, 52, 54, 55, 56	EX8	DGZ		With Heater Booster
		1	3, 7	L	02, 06	EX8	DGZ		With Heater Booster
		1	3, 7	L	12, 15, 16	EX8	DGZ		With Heater Booster
4									TERMINAL
	5102 935AA	99	2, 6	L	11, 12, 14, 15, 16	EX8	DGZ		
		99	2, 6	L	51, 52, 54, 55, 56	EX8	DGZ		
		99	3, 7	L	02, 06	EX8	DGZ		
		99	3, 7	L	12, 15, 16	EX8	DGZ		
		1	3, 7	L	02, 06	EX8	DGZ		
5									CONNECTOR
	5120 544AA	1	2, 6	L	01, 02, 06	EX8	DGZ		
		1	2, 6	L	11, 12, 14, 15, 16	EX8	DGZ		
		1	2, 6	L	51, 52, 54, 55, 56	EX8	DGZ		
		1	3, 7	L	02, 06	EX8	DGZ		
		1	3, 7	L	12, 15, 16	EX8	DGZ		
6									GASKET
	5103 661AA	99	2, 6	L	01, 02, 06	EX8	DGZ		
		99	2, 6	L	11, 12, 14, 15, 16	EX8	DGZ		
		99	2, 6	L	51, 52, 54, 55, 56	EX8	DGZ		
		1	3, 7	L	02, 06	EX8	DGZ		
		1	3, 7	L	12, 15, 16	EX8	DGZ		

Refer to Model Legend Information Bookmark

AR = Use as required - = Non illustrated part # = New this model year

March 3, 2006

« RETURN TO GROUP INDEX

Fuel Injection Pump [EX8]
Figure 014-610

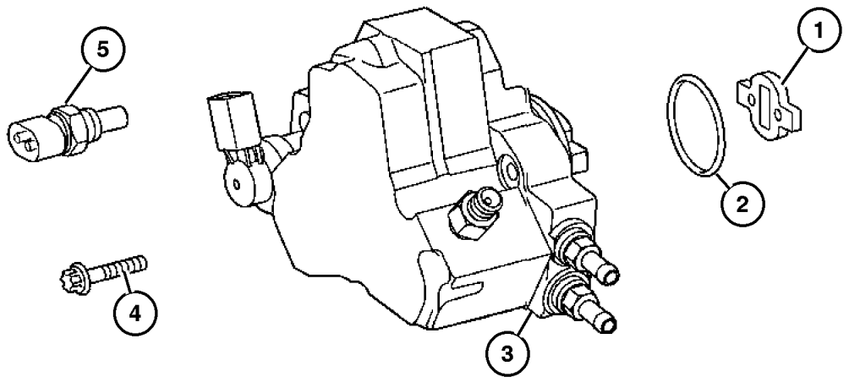

ITEM	PART NUMBER	QTY	LINE	SERIES	BODY	ENGINE	TRANS	TRIM	DESCRIPTION
Sales Codes:EX8=2.7L I5 MERCEDES-BENZ									
DGJ=TRANSMISSION - 5-SPD AUTO									
1	5103 610AA	1	2, 3, 6, 7	L		EX8	DGZ		DRIVE, Fuel Pump
2	5080 115AA	1	2, 3, 6, 7	L		EX8	DGZ		O RING
3	5142 257AA		2, 3, 6, 7	L		EX8	DGZ		PUMP, Injection
4									SCREW
	5125 738AA	1	2, 6	L	11, 12, 14, 15, 16	EX8	DGZ		
		1	2, 6	L	51, 52, 54, 55, 56	EX8	DGZ		
		1	2, 6	L	01, 02, 06	EX8	DGZ		
		1	3, 7	L	02, 06	EX8	DGZ		
		1	3, 7	L	12, 15, 16	EX8	DGZ		
5	5103 534AB	1	2, 3, 6, 7	L		EX8	DGZ		SENDING UNIT, Temperature Gauge
-6	5175 767AA-	1	2, 3, 6, 7	L		EX8	DGZ		VALVE, Flow Control

Refer to Model Legend Information Bookmark

AR = Use as required - = Non illustrated part # = New this model year

March 3, 2006

RETURN TO GROUP INDEX

Turbo Charger
Figure 014-630

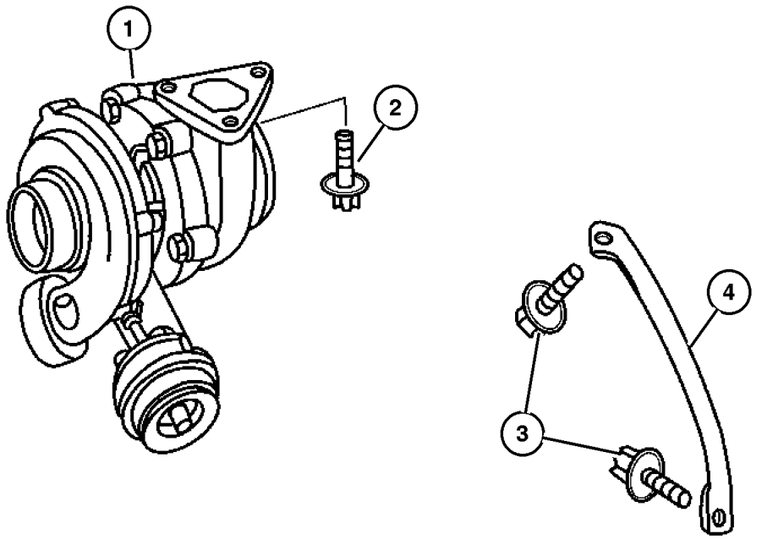

ITEM	PART NUMBER	QTY	LINE	SERIES	BODY	ENGINE	TRANS	TRIM	DESCRIPTION
Sales Codes:EX8=ENGINE-2.7L I5 MERCEDES TURBO									
DGJ=TRANSMISSION - 5-SPD AUTO									
1	5142 494AA	1	2, 3, 6, 7	L		EX8	DGZ		TURBOCHARGER
2	5073 720AC	3	2, 3, 6, 7	L		EX8	DGZ		SCREW
3	5073 720AA	3	2, 3, 6, 7	L		EX8	DGZ		SCREW
4	5137 201AA	1	2, 3, 6, 7	L		EX8	DGZ		BRACKET, Turbo Charger
-5	5137 154AA-	1	2, 3, 6, 7	L		EX8	DGZ		RESONATOR, turbo, See Group 7 ILL#130
-6									O RING
	5139 047AA-	1	2, 6	L	01, 02, 06	EX8	DGZ		
		1	2, 6	L	11, 12, 14, 15, 16	EX8	DGZ		
		1	2, 6	L	51, 52, 54, 55, 56	EX8	DGZ		
		1	3, 7	L	02, 06	EX8	DGZ		
		1	3, 7	L	12, 15, 16	EX8	DGZ		
-7	5138 048AA-	1	2, 3, 6, 7	L		EX8	DGZ		O RING

Refer to Model Legend Information Bookmark

AR = Use as required - = Non illustrated part # = New this model year

March 3, 2006

RETURN TO GROUP INDEX

Air Cleaner
Figure 014-810

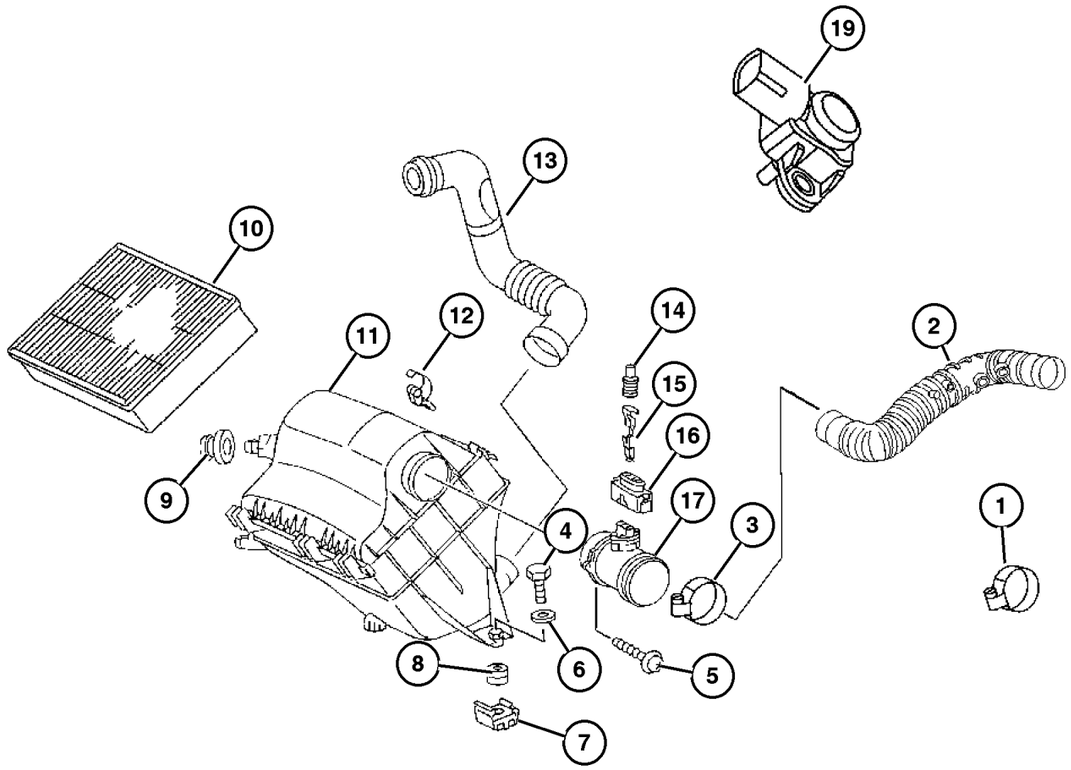

ITEM	PART NUMBER	QTY	LINE	SERIES	BODY	ENGINE	TRANS	TRIM	DESCRIPTION
1									CLAMP
	6104 787AA	1	2, 6	L	01, 02, 06	EX8	DGZ		
		1	2, 6	L	11, 12, 14, 15, 16	EX8	DGZ		
		1	2, 6	L	51, 52, 54, 55, 56	EX8	DGZ		
		1	3, 7	L	02, 06	EX8	DGZ		
		1	3, 7	L	12, 15, 16	EX8	DGZ		
2									HOSE, Air Cleaner
	5120 144AA	1	2, 6	L	01, 02, 06	EX8	DGZ		
		1	2, 6	L	11, 12, 14, 15, 16	EX8	DGZ		
		1	2, 6	L	51, 52, 54, 55, 56	EX8	DGZ		
		1	3, 7	L	02, 06	EX8	DGZ		
		1	3, 7	L	12, 15, 16	EX8	DGZ		
3									CLAMP
	6104 790AA	1	2, 6	L	01, 02, 06	EX8	DGZ		
		1	2, 6	L	11, 12, 14, 15, 16	EX8	DGZ		
		1	2, 6	L	51, 52, 54, 55, 56	EX8	DGZ		
		1	3, 7	L	02, 06	EX8	DGZ		
		1	3, 7	L	12, 15, 16	EX8	DGZ		
4									BOLT
	6104 124AA	1	2, 6	L	01, 02, 06	EX8	DGZ		
		1	2, 6	L	11, 12, 14, 15, 16	EX8	DGZ		
		1	2, 6	L	51, 52, 54, 55, 56	EX8	DGZ		

Refer to Model Legend Information Bookmark

AR = Use as required - = Non illustrated part # = New this model year

March 3, 2006

« RETURN TO GROUP INDEX

»

Air Cleaner
Figure 014-810

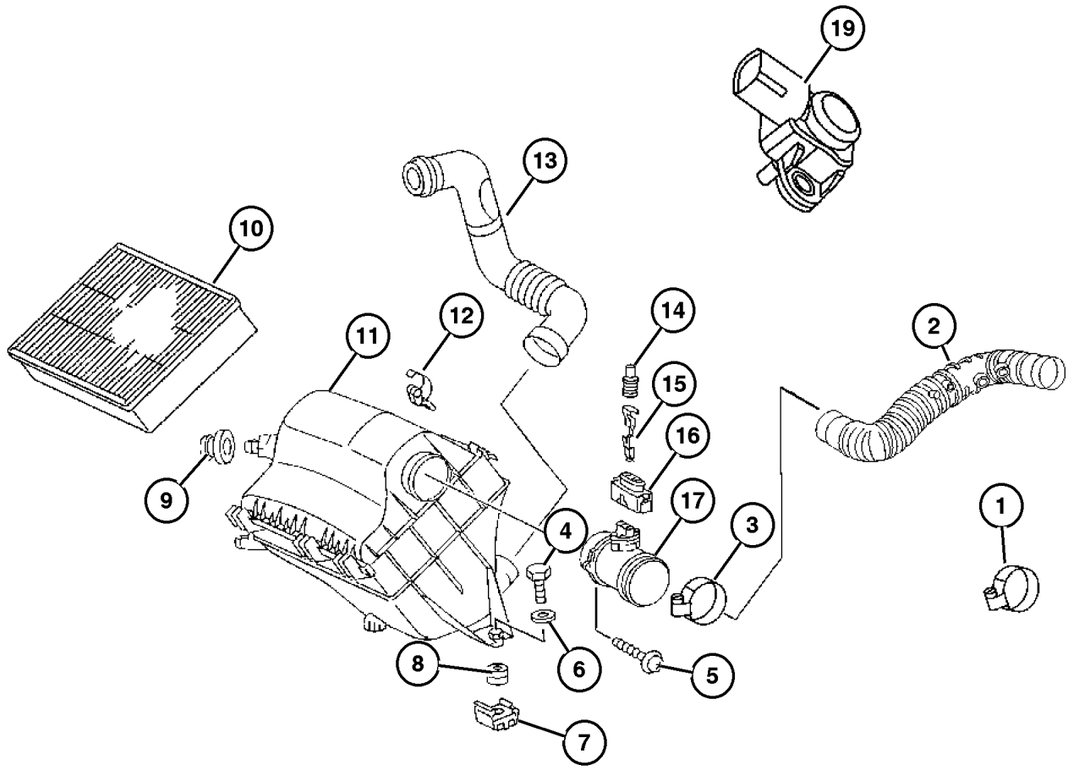

ITEM	PART NUMBER	QTY	LINE	SERIES	BODY	ENGINE	TRANS	TRIM	DESCRIPTION
		1	3, 7	L	02, 06	EX8	DGZ		
		1	3, 7	L	12, 15, 16	EX8	DGZ		
5									BOLT, Hex Head
	5133 748AA	2	2, 6	L	01, 02, 06	EX8	DGZ		
		2	2, 6	L	11, 12, 14, 15, 16	EX8	DGZ		
		2	2, 6	L	51, 52, 54, 55, 56	EX8	DGZ		
		2	3, 7	L	02, 06	EX8	DGZ		
		2	3, 7	L	12, 15, 16	EX8	DGZ		
6									WASHER
	5133 908AA	2	2, 6	L	01, 02, 06	EX8	DGZ		
		2	2, 6	L	11, 12, 14, 15, 16	EX8	DGZ		
		2	2, 6	L	51, 52, 54, 55, 56	EX8	DGZ		
		2	3, 7	L	02, 06	EX8	DGZ		
		2	3, 7	L	12, 15, 16	EX8	DGZ		
7									NUT
	5126 253AA	2	2, 6	L	01, 02, 06	EX8	DGZ		
		2	2, 6	L	11, 12, 14, 15, 16	EX8	DGZ		
		2	2, 6	L	51, 52, 54, 55, 56	EX8	DGZ		
		2	3, 7	L	02, 06	EX8	DGZ		
		2	3, 7	L	12, 15, 16	EX8	DGZ		
8									BUSHING, Isolator Mounting Leg
	5133 742AA	1	2, 6	L	01, 02, 06	EX8	DGZ		
		1	2, 6	L	11, 12, 14, 15, 16	EX8	DGZ		

Refer to Model Legend Information Bookmark

Air Cleaner
Figure 014-810

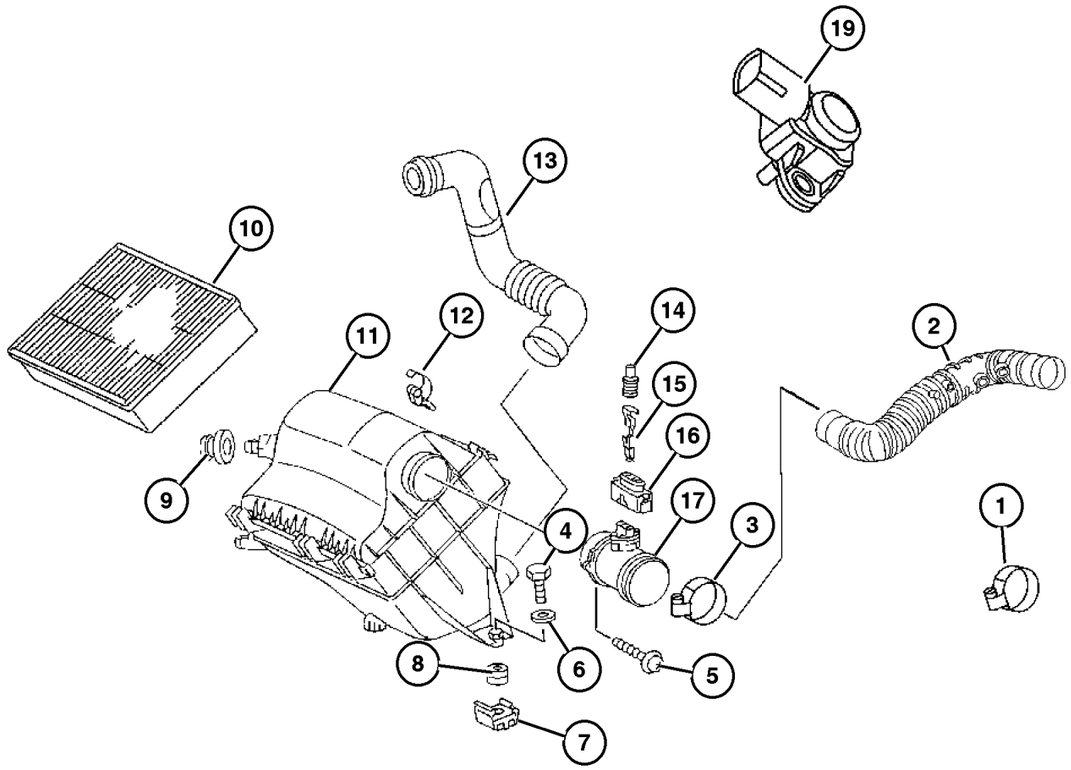

ITEM	PART NUMBER	QTY	LINE	SERIES	BODY	ENGINE	TRANS	TRIM	DESCRIPTION
		1	2, 6	L	51, 52, 54, 55, 56	EX8	DGZ		
		1	3, 7	L	02, 06	EX8	DGZ		
		1	3, 7	L	12, 15, 16	EX8	DGZ		
9	5120 012AA	2	2, 6	L	01, 02, 06	EX8	DGZ		GROMMET, Air Cleaner
		2	2, 6	L	11, 12, 14, 15, 16	EX8	DGZ		
		2	2, 6	L	51, 52, 54, 55, 56	EX8	DGZ		
		2	3, 7	L	02, 06	EX8	DGZ		
		2	3, 7	L	12, 15, 16	EX8	DGZ		
10	5103 554AA	1	2, 6	L	01, 02, 06	EX8	DGZ		FILTER, Air
		1	2, 6	L	11, 12, 14, 15, 16	EX8	DGZ		
		1	2, 6	L	51, 52, 54, 55, 56	EX8	DGZ		
		1	3, 7	L	02, 06	EX8	DGZ		
		1	3, 7	L	12, 15, 16	EX8	DGZ		
11	5117 478AA	1	2, 6	L	01, 02, 06	EX8	DGZ		AIR CLEANER
		1	2, 6	L	11, 12, 14, 15, 16	EX8	DGZ		
		1	2, 6	L	51, 52, 54, 55, 56	EX8	DGZ		
	5117 480AA	1	3, 7	L	02, 06	EX8	DGZ		
		1	3, 7	L	12, 15, 16	EX8	DGZ		
12	5133 741AA	1	2, 6	L	01, 02, 06	EX8	DGZ		LATCH, Air Cleaner

Refer to Model Legend Information Bookmark

Air Cleaner
Figure 014-810

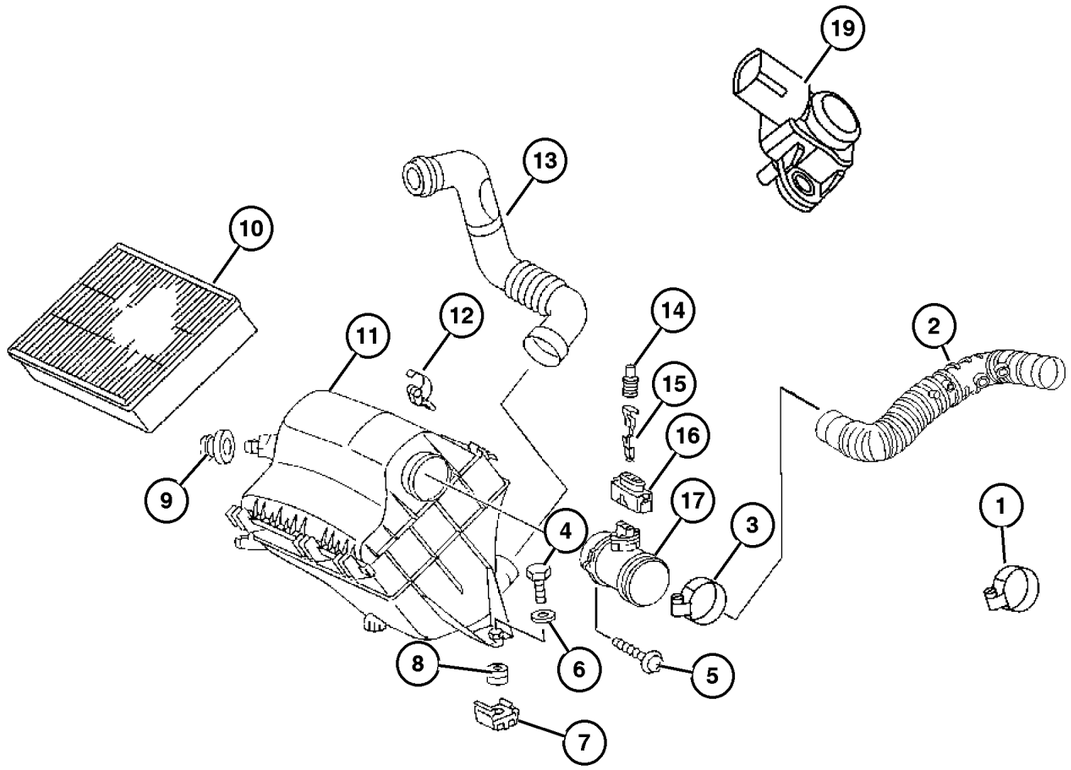

ITEM	PART NUMBER	QTY	LINE	SERIES	BODY	ENGINE	TRANS	TRIM	DESCRIPTION
		1	2, 6	L	11, 12, 14, 15, 16	EX8	DGZ		
		1	3, 7	L	02, 06	EX8	DGZ		
		1	3, 7	L	12, 15, 16	EX8	DGZ		
		1	2, 6	L	51, 52, 54, 55, 56	EX8	DGZ		
13									HOSE, Air Cleaner
	5103 616AA	1	2, 6	L	01, 02, 06	EX8	DGZ		
		1	2, 6	L	11, 12, 14, 15, 16	EX8	DGZ		
		1	2, 6	L	51, 52, 54, 55, 56	EX8	DGZ		
		1	3, 7	L	02, 06	EX8	DGZ		
		1	3, 7	L	12, 15, 16	EX8	DGZ		
14									GASKET
	5103 661AA	1	2, 6	L	51, 52, 54, 55, 56	EX8	DGZ		
		1	2, 6	L	01, 02, 06	EX8	DGZ		
		1	2, 6	L	11, 12, 14, 15, 16	EX8	DGZ		
		1	3, 7	L	02, 06	EX8	DGZ		
		1	3, 7	L	12, 15, 16	EX8	DGZ		
		99	3, 7	L	02, 06	EX8	DGZ		
		99	3, 7	L	12, 15, 16	EX8	DGZ		
15									TERMINAL
	5102 935AA	1	2, 6	L	01, 02, 06	EX8	DGZ		
		1	2, 6	L	11, 12, 14, 15, 16	EX8	DGZ		
		1	2, 6	L	51, 52, 54, 55, 56	EX8	DGZ		
		1	3, 7	L	02, 06	EX8	DGZ		
		1	3, 7	L	12, 15, 16	EX8	DGZ		
16									PLUG

Refer to Model Legend Information Bookmark

AR = Use as required - = Non illustrated part # = New this model year

March 3, 2006

« RETURN TO GROUP INDEX

Air Cleaner
Figure 014-810

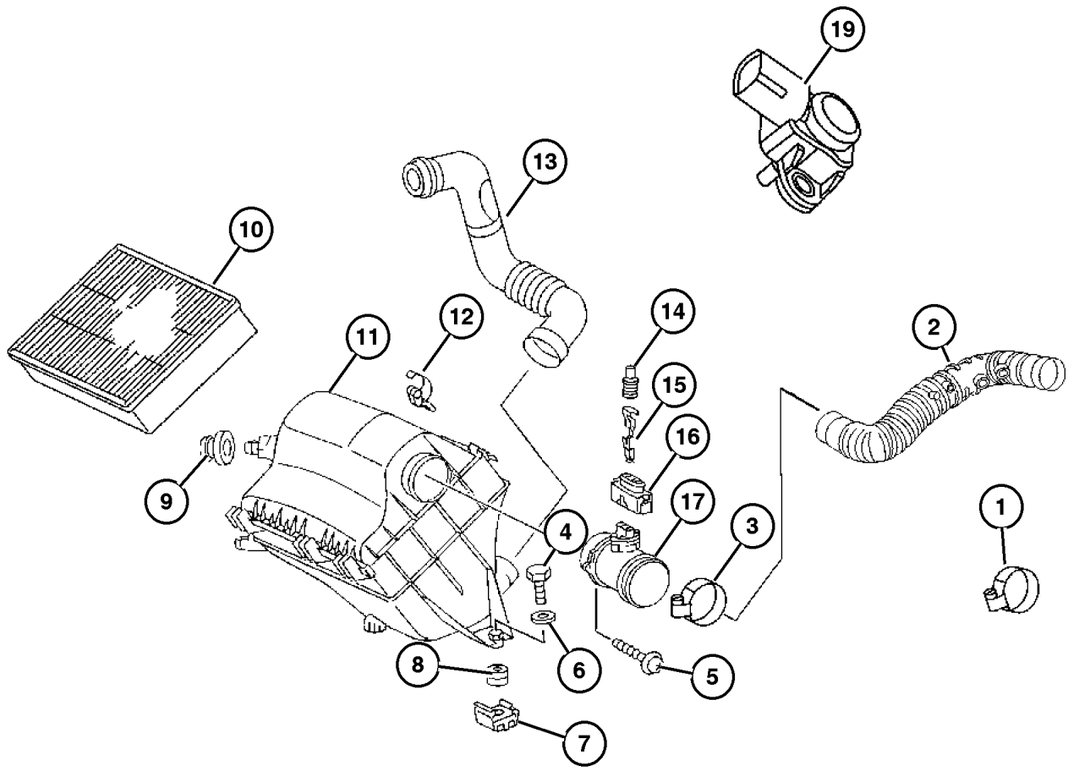

ITEM	PART NUMBER	QTY	LINE	SERIES	BODY	ENGINE	TRANS	TRIM	DESCRIPTION
	5120 763AA	1	2, 6	L	51, 52, 54, 55, 56	EX8	DGZ		
		1	2, 6	L	01, 02, 06	EX8	DGZ		
		1	2, 6	L	11, 12, 14, 15, 16	EX8	DGZ		
		1	3, 7	L	02, 06	EX8	DGZ		
		1	3, 7	L	12, 15, 16	EX8	DGZ		
17									SENSOR, Mass Airflow
	5117 501AA	1	2, 6	L	01, 02, 06	EX8	DGZ		
		1	2, 6	L	11, 12, 14, 15, 16	EX8	DGZ		
		1	2, 6	L	51, 52, 54, 55, 56	EX8	DGZ		
		1	3, 7	L	02, 06	EX8	DGZ		
		1	3, 7	L	12, 15, 16	EX8	DGZ		
-18									BRACKET, Air Inlet
	5120 059AA-	1	2, 6	L	01, 02, 06	EX8	DGZ		
		1	2, 6	L	11, 12, 14, 15, 16	EX8	DGZ		
		1	2, 6	L	51, 52, 54, 55, 56	EX8	DGZ		
		1	3, 7	L	02, 06	EX8	DGZ		
		1	3, 7	L	12, 15, 16	EX8	DGZ		
19									SENSOR, Air Pressure
	5101 120AB	1	2, 6	L	01, 02, 06	EX8	DGZ		
		1	2, 6	L	11, 12, 14, 15, 16	EX8	DGZ		
		1	2, 6	L	51, 52, 54, 55, 56	EX8	DGZ		
		1	3, 7	L	02, 06	EX8	DGZ		

Refer to Model Legend Information Bookmark

Air Cleaner
Figure 014-810

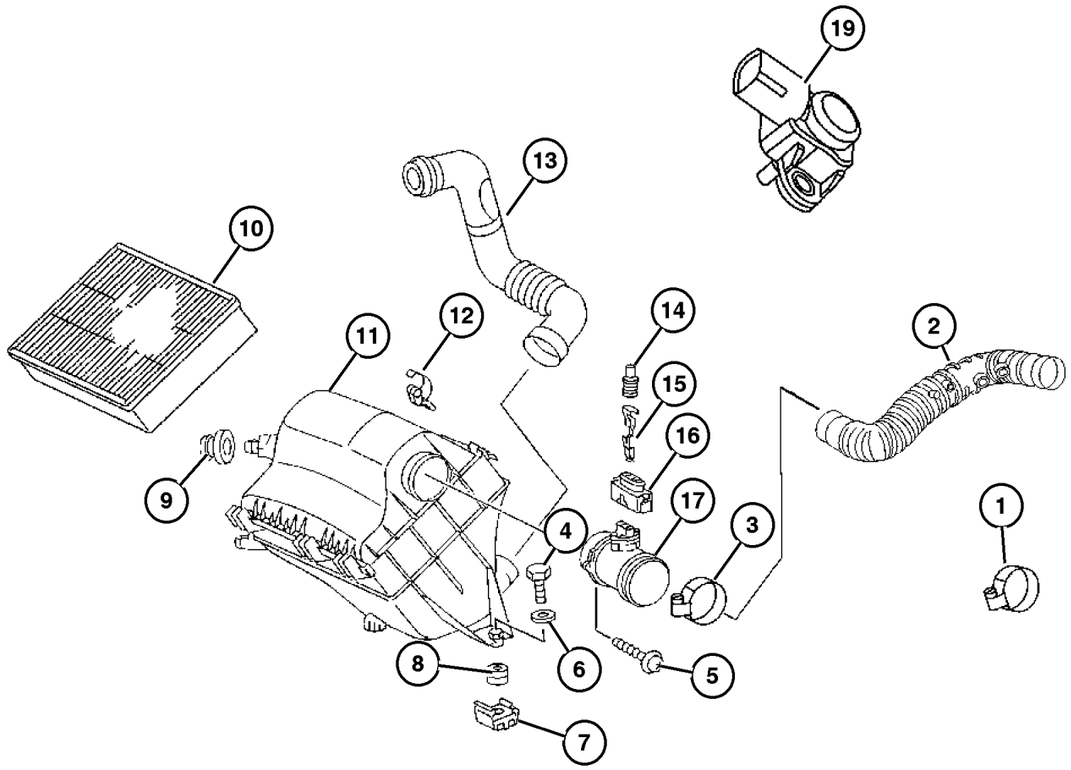

ITEM	PART NUMBER	QTY	LINE	SERIES	BODY	ENGINE	TRANS	TRIM	DESCRIPTION
		1	3, 7	L	12, 15, 16	EX8	DGZ		

Refer to Model Legend Information Bookmark

AR = Use as required - = Non illustrated part # = New this model year

March 3, 2006

« RETURN TO GROUP INDEX

«

Accelerator Pedal
Figure 014-1110

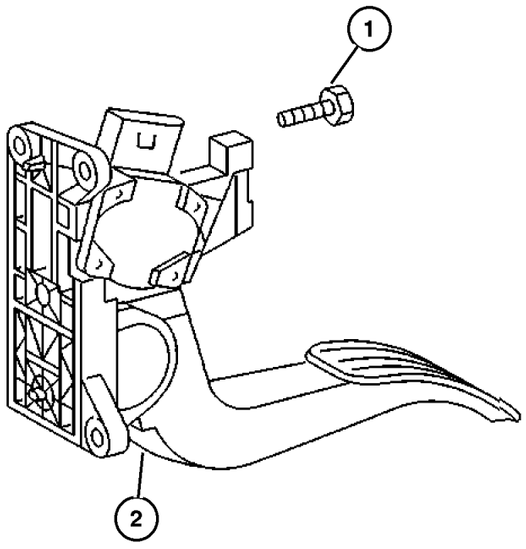

ITEM	PART NUMBER	QTY	LINE	SERIES	BODY	ENGINE	TRANS	TRIM	DESCRIPTION
Sales Codes:[EX8]= 2.7L I5 MERCEDES-BENZ									
DGJ=TRANSMISSION - 5-SPD AUTO									
1									SCREW
	6104 005AA	2	2, 6	L	11, 12, 14, 15, 16	EX8	DGZ		
		2	2, 6	L	51, 52, 54, 55, 56	EX8	DGZ		
		3	2, 6	L	01, 02, 06	EX8	DGZ		
		3	2, 6	L	11, 12, 14, 15, 16	EX8	DGZ		
		2	3, 7	L	12, 15, 16	EX8	DGZ		
		3	3, 7	L	02, 06	EX8	DGZ		
2									PEDAL, Accelerator
	5135 510AA	1	2, 6	L	01, 02, 06	EX8	DGZ		
		1	2, 6	L	11, 12, 14, 15, 16	EX8	DGZ		
		1	2, 6	L	51, 52, 54, 55, 56	EX8	DGZ		
		1	3, 7	L	02, 06	EX8	DGZ		
		1	3, 7	L	12, 15, 16	EX8	DGZ		

Refer to Model Legend Information Bookmark

AR = Use as required - = Non illustrated part # = New this model year

March 3, 2006

« RETURN TO GROUP INDEX

Group – 016

Propeller Shafts and U–Joints

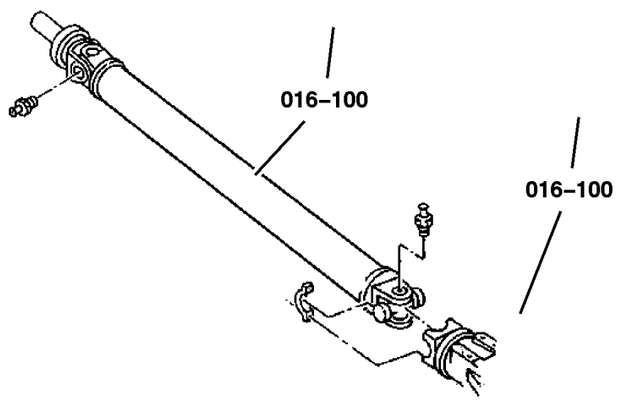

016–100 Propeller Shaft 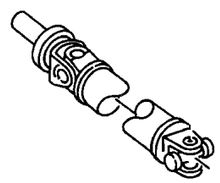			

GROUP 16 - Propeller Shafts and U-Joints

Illustration Title	Group-Fig. No.
Propeller Shaft	
Shaft,Propeller,Rear,2 Piece	Fig. 016-120
Shaft,Propeller,Rear,3 Piece	Fig. 016-130

Shaft,Propeller,Rear,2 Piece
Figure 016-120

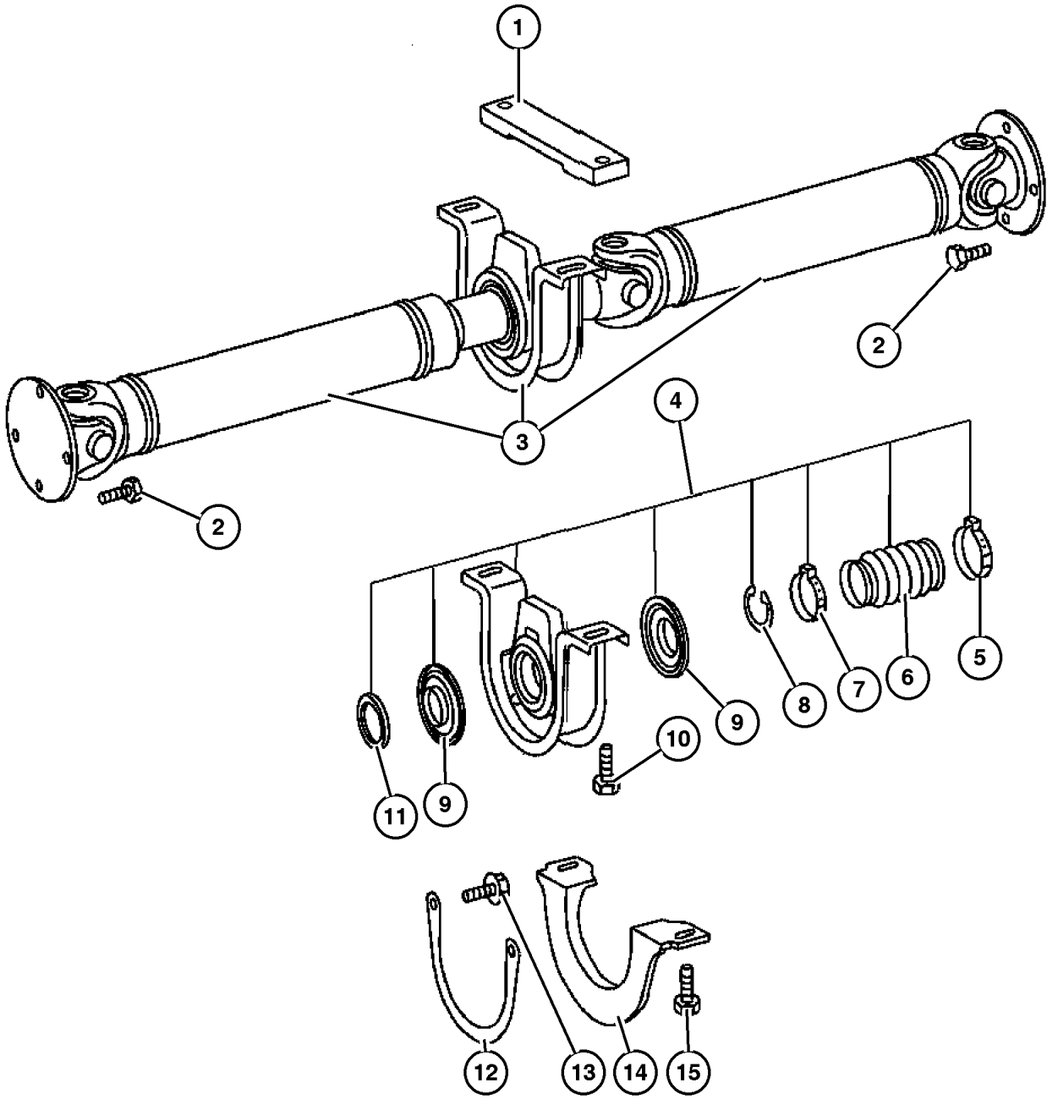

ITEM	PART NUMBER	QTY	LINE	SERIES	BODY	ENGINE	TRANS	TRIM	DESCRIPTION
1	5129 044AA	2		L			DGZ		SHIM, Drive Shaft Bearing
2									BOLT
	5103 939AA	8	2, 6	L	01, 02	EX8	DGZ		
		8	2, 6	L	11, 12, 14, 15	EX8	DGZ		
		8	2, 6	L	51, 52, 54, 55	EX8	DGZ		
		8	3, 7	L	02	EX8	DGZ		
		8	3, 7	L	12, 15	EX8	DGZ		
3									SHAFT, Drive, 2 Piece
	5129 034AA	1	2, 6	L	01	EX8	DGZ		
	5119 086AA	1	2, 6	L	02	EX8	DGZ		
	5129 034AA	1	2, 6	L	11, 14	EX8	DGZ		
	5119 086AA	1	2, 6	L	12, 15	EX8	DGZ		
	5129 034AA	1	2, 6	L	51, 54	EX8	DGZ		
	5119 086AA	1	2, 6	L	52, 55	EX8	DGZ		
		1	3, 7	L	02	EX8	DGZ		
		1	3, 7	L	12, 15	EX8	DGZ		
4									CENTER BEARING, Drive Shaft
	5104 574AA	1	2, 6	L	01, 02, 06	EX8	DGZ		
		1	2, 6	L	11, 12, 14, 15, 16	EX8	DGZ		
		1	2, 6	L	51, 52, 54, 55, 56	EX8	DGZ		
		1	3, 7	L	02, 06	EX8	DGZ		
		1	3, 7	L	12, 15, 16	EX8	DGZ		
5									CLAMP, Boot
	5133 900AA	1	2, 6	L	01, 02, 06	EX8	DGZ		
		1	2, 6	L	11, 12, 14, 15, 16	EX8	DGZ		
		1	2, 6	L	51, 52, 54, 55, 56	EX8	DGZ		
		1	3, 7	L	02, 06	EX8	DGZ		
		1	3, 7	L	12, 15, 16	EX8	DGZ		
6									BOOT, Driveshaft
	5133 897AA	1	2, 6	L	01, 02, 06	EX8	DGZ		

Refer to Model Legend Information Bookmark

AR = Use as required - = Non illustrated part # = New this model year

March 3, 2006

« RETURN TO GROUP INDEX

»

Shaft,Propeller,Rear,2 Piece
Figure 016-120

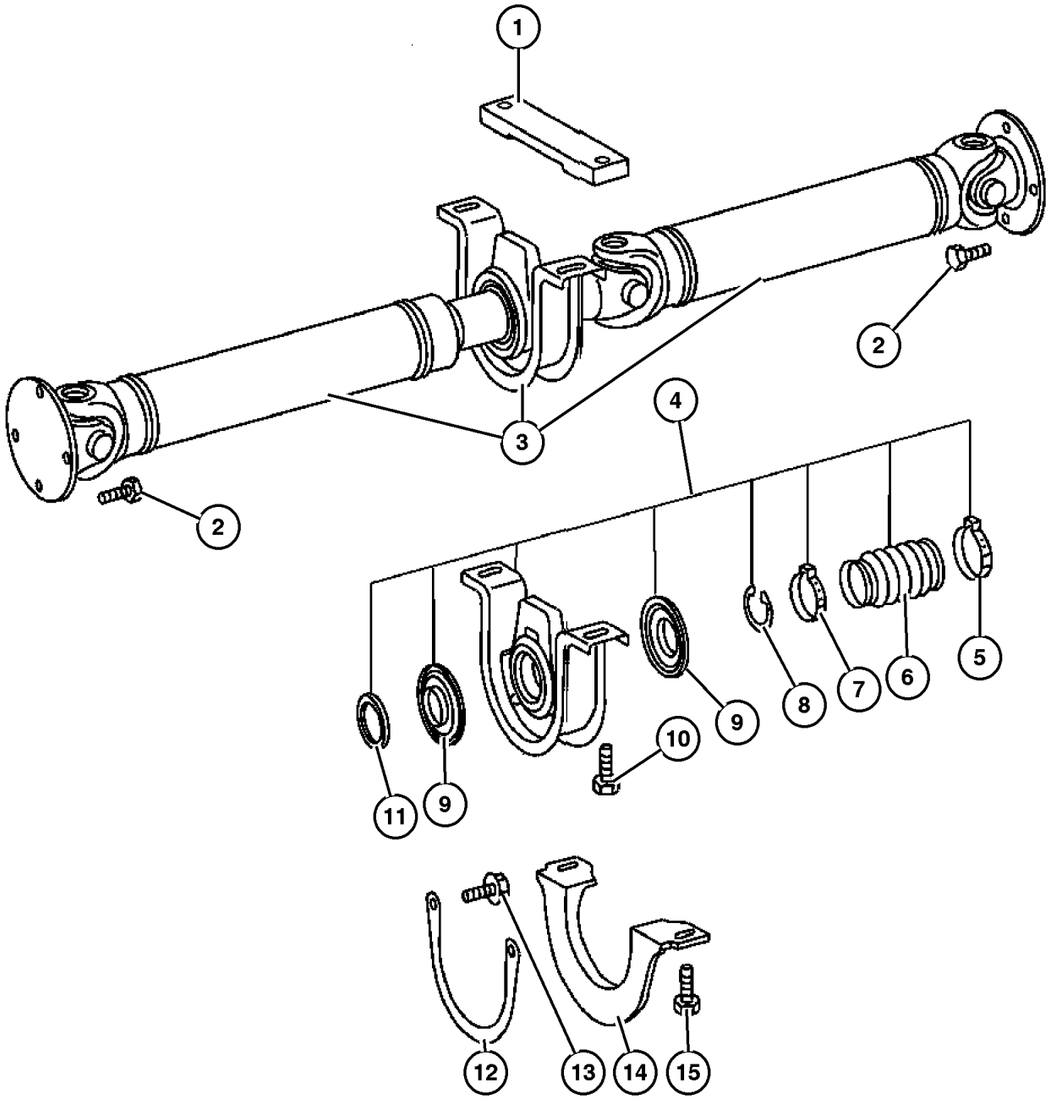

ITEM	PART NUMBER	QTY	LINE	SERIES	BODY	ENGINE	TRANS	TRIM	DESCRIPTION
		1	2, 6	L	11, 12, 14, 15, 16	EX8	DGZ		
		1	2, 6	L	51, 52, 54, 55, 56	EX8	DGZ		
		1	3, 7	L	02, 06	EX8	DGZ		
		1	3, 7	L	12, 15, 16	EX8	DGZ		
7									CLAMP, Boot
	5133 899AA	1	2, 6	L	01, 02, 06	EX8	DGZ		
		1	2, 6	L	11, 12, 14, 15, 16	EX8	DGZ		
		1	2, 6	L	51, 52, 54, 55, 56	EX8	DGZ		
		1	3, 7	L	02, 06	EX8	DGZ		
		1	3, 7	L	12, 15, 16	EX8	DGZ		
8									SNAP RING, Purchase Item 5, (NOT SERVICED) (Not Serviced)
9									BOOT, Driveshaft
	5133 898AA	1	2, 6	L	01, 02, 06	EX8	DGZ		
		1	2, 6	L	11, 12, 14, 15, 16	EX8	DGZ		
		1	2, 6	L	51, 52, 54, 55, 56	EX8	DGZ		
		1	3, 7	L	02, 06	EX8	DGZ		
		1	3, 7	L	12, 15, 16	EX8	DGZ		
10									BOLT
	6104 238AA	2	2, 6	L	01, 02, 06	EX8	DGZ		
		2	2, 6	L	11, 12, 14, 15, 16	EX8	DGZ		
		2	2, 6	L	51, 52, 54, 55, 56	EX8	DGZ		
		2	3, 7	L	02, 06	EX8	DGZ		

Refer to Model Legend Information Bookmark

AR = Use as required - = Non illustrated part # = New this model year

March 3, 2006

« RETURN TO GROUP INDEX

Shaft,Propeller,Rear,2 Piece
Figure 016-120

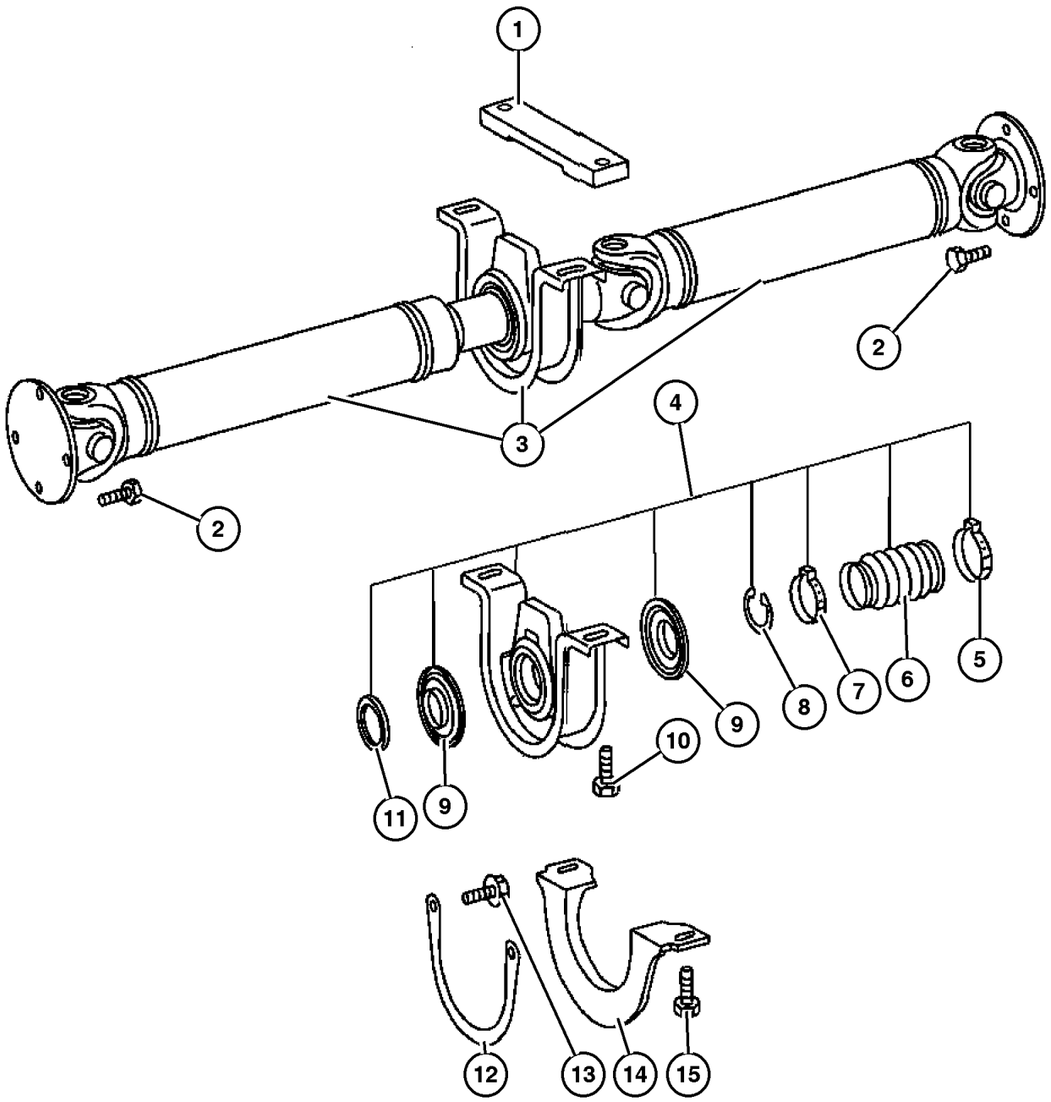

ITEM	PART NUMBER	QTY	LINE	SERIES	BODY	ENGINE	TRANS	TRIM	DESCRIPTION
		2	3, 7	L	12, 15, 16	EX8	DGZ		
11									THRUST WASHER, Purchase Item 5, (NOT SERVICED) (Not Serviced)
12									STRAP, Prop Shaft
	5119 131AA	1	2, 6	L	01, 02, 06	EX8	DGZ		
		1	2, 6	L	11, 12, 14, 15, 16	EX8	DGZ		
		1	2, 6	L	51, 52, 54, 55, 56	EX8	DGZ		
		1	3, 7	L	02, 06	EX8	DGZ		
		1	3, 7	L	12, 15, 16	EX8	DGZ		
13									SCREW
	6104 234AA	2	2, 6	L	01, 02, 06	EX8	DGZ		
		2	2, 6	L	11, 12, 14, 15, 16	EX8	DGZ		
		2	2, 6	L	51, 52, 54, 55, 56	EX8	DGZ		
		2	3, 7	L	02, 06	EX8	DGZ		
		2	3, 7	L	12, 15, 16	EX8	DGZ		
14									BRACKET, Prop Shaft
	5119 133AA	1	2, 6	L	01, 02	EX8	DGZ		
		1	2, 6	L	11, 12, 14, 15, 16	EX8	DGZ		
		1	2, 6	L	51, 52, 54, 55, 56	EX8	DGZ		
		1	3, 7	L	02	EX8	DGZ		
		1	3, 7	L	12, 15, 16	EX8	DGZ		
15									BOLT, Hex
	5133 896AA	2	2, 6	L	01, 02	EX8	DGZ		
		2	2, 6	L	11, 12, 14, 15, 16	EX8	DGZ		

Refer to Model Legend Information Bookmark

Shaft,Propeller,Rear,2 Piece
Figure 016-120

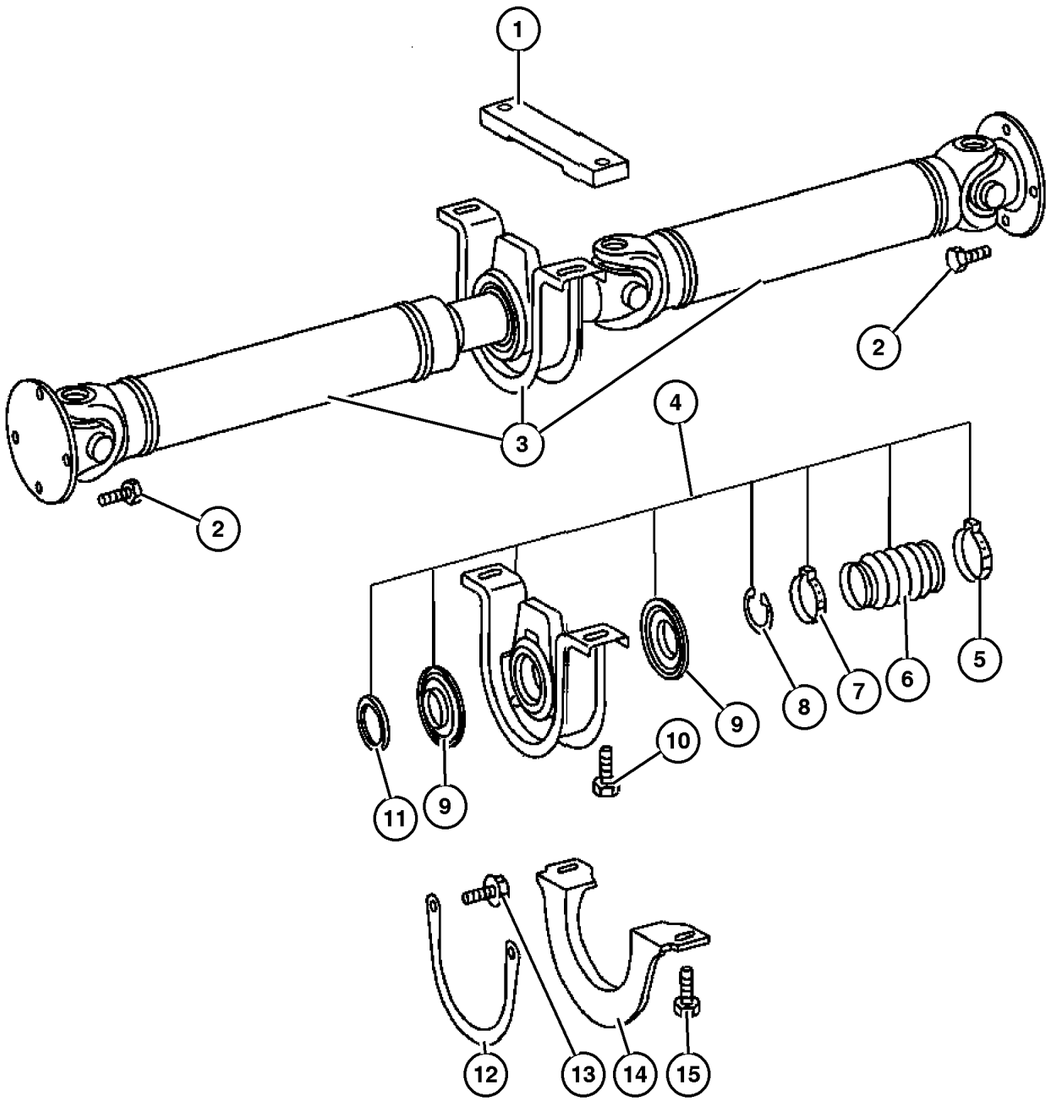

ITEM	PART NUMBER	QTY	LINE	SERIES	BODY	ENGINE	TRANS	TRIM	DESCRIPTION
		2	2, 6	L	51, 52, 54, 55, 56	EX8	DGZ		
		2	3, 7	L	02	EX8	DGZ		
		2	3, 7	L	12, 15, 16	EX8	DGZ		

Refer to Model Legend Information Bookmark

AR = Use as required - = Non illustrated part # = New this model year

March 3, 2006

« RETURN TO GROUP INDEX

Shaft,Propeller,Rear,3 Piece
Figure 016-130

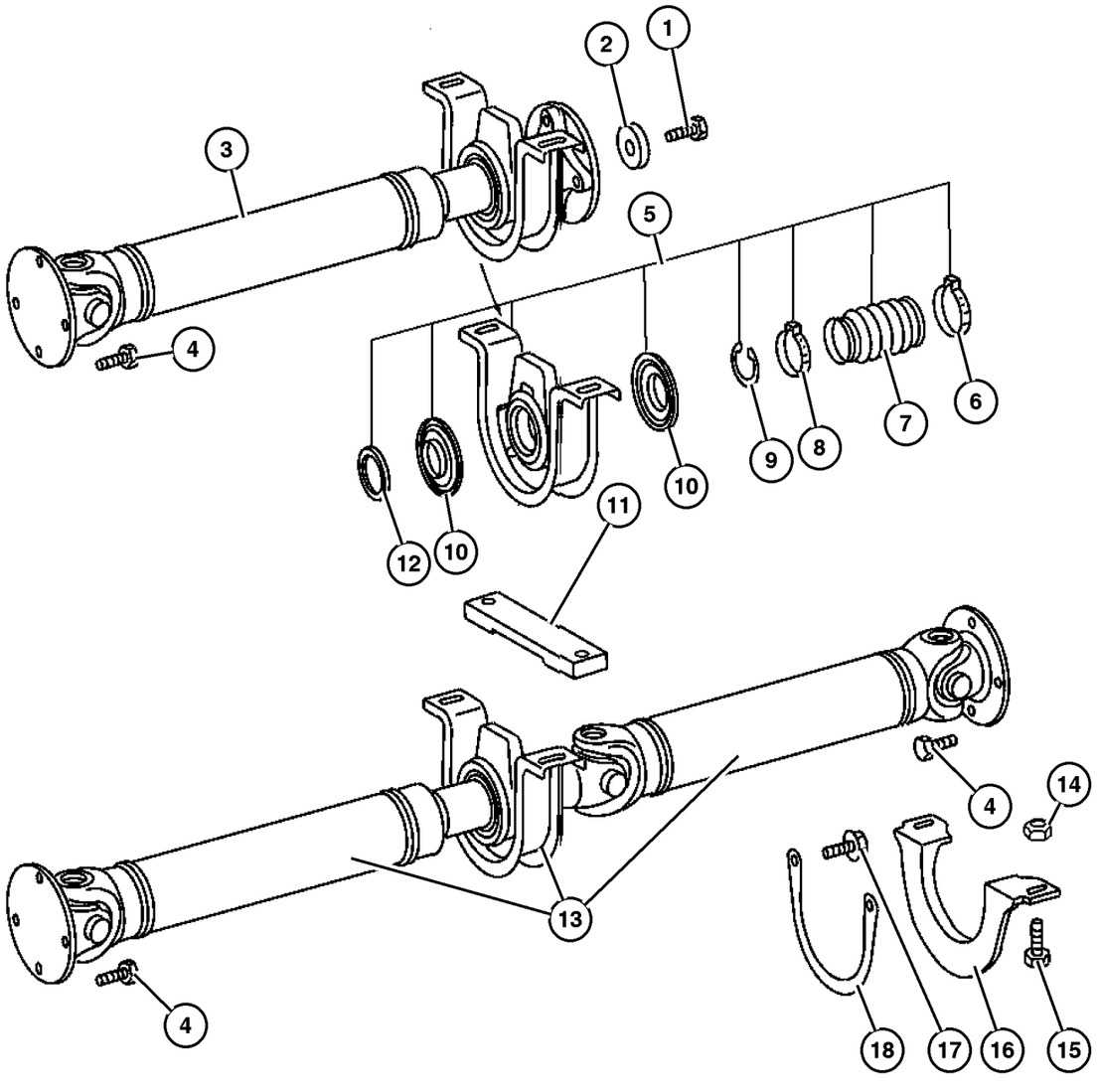

ITEM	PART NUMBER	QTY	LINE	SERIES	BODY	ENGINE	TRANS	TRIM	DESCRIPTION
1									BOLT, Drive Shaft
	5133 893AA	1	2, 6	L	01, 02, 06	EX8	DGZ		
		1	2, 6	L	11, 12, 14, 15, 16	EX8	DGZ		
		1	2, 6	L	51, 52, 54, 55, 56	EX8	DGZ		
		1	3, 7	L	02, 06	EX8	DGZ		
		1	3, 7	L	12, 15, 16	EX8	DGZ		
2									WASHER, Thrust
	5133 894AA	1	2, 6	L	01, 02, 06	EX8	DGZ		
		1	2, 6	L	11, 12, 14, 15, 16	EX8	DGZ		
		1	2, 6	L	51, 52, 54, 55, 56	EX8	DGZ		
		1	3, 7	L	02, 06	EX8	DGZ		
		1	3, 7	L	12, 15, 16	EX8	DGZ		
3									SHAFT, Drive, Rear, Front section
	5104 083AA	1	2, 6	L	06	EX8	DGZ		
		1	2, 6	L	11, 12, 14, 15, 16	EX8	DGZ		
		1	2, 6	L	51, 52, 54, 55, 56	EX8	DGZ		
		1	3, 7	L	02, 06	EX8	DGZ		
		1	3, 7	L	12, 15, 16	EX8	DGZ		
4									BOLT
	5103 939AA	12	2, 6	L	06	EX8	DGZ		
		12	2, 6	L	16	EX8	DGZ		
		12	2, 6	L	56	EX8	DGZ		
		12	3, 7	L	06	EX8	DGZ		
		12	3, 7	L	16	EX8	DGZ		
5									CENTER BEARING, Drive Shaft
	5104 574AA	1	2, 6	L	01, 02, 06	EX8	DGZ		

Refer to Model Legend Information Bookmark

AR = Use as required - = Non illustrated part # = New this model year

March 3, 2006

« RETURN TO GROUP INDEX »

Shaft,Propeller,Rear,3 Piece
Figure 016-130

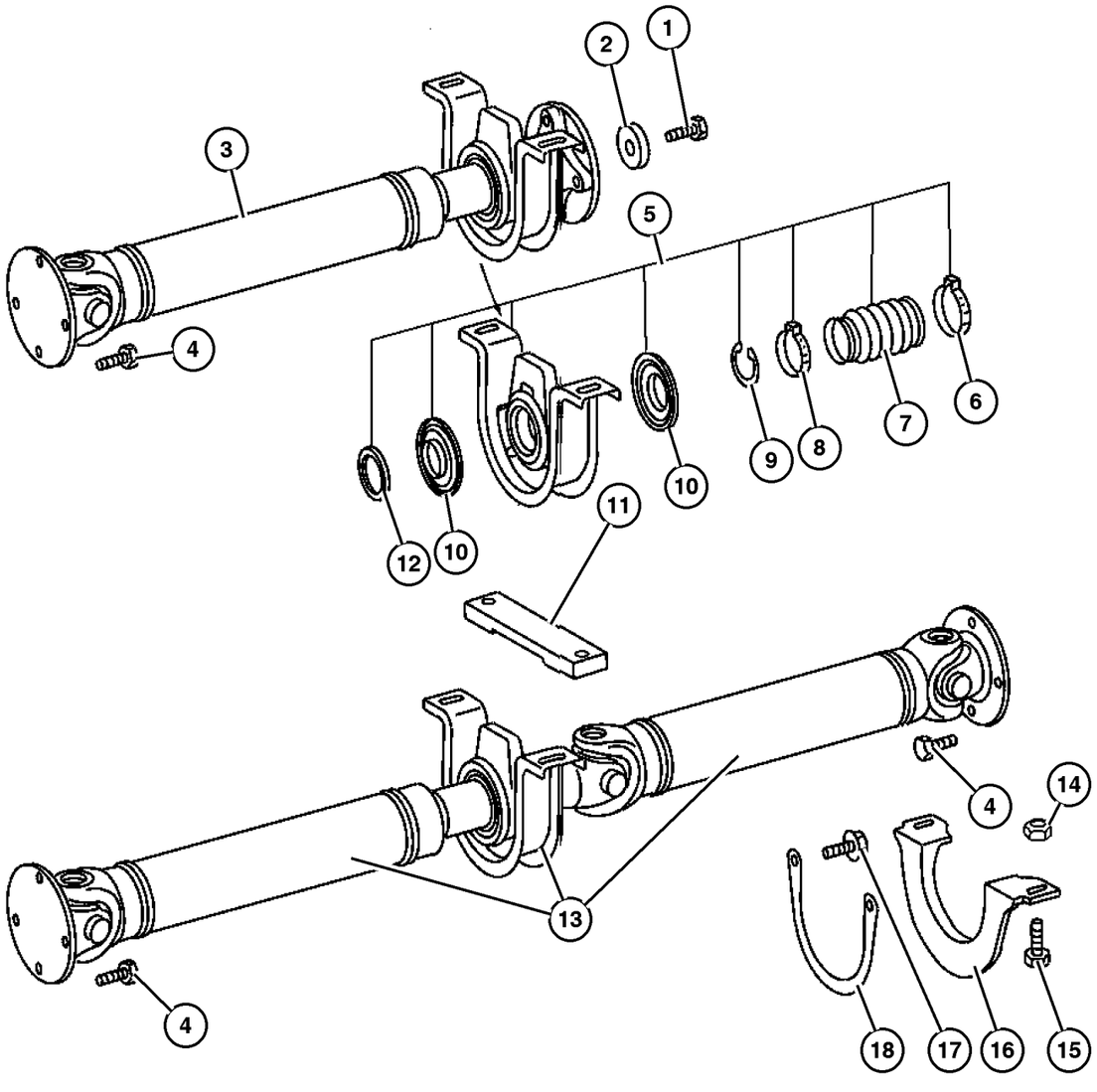

ITEM	PART NUMBER	QTY	LINE	SERIES	BODY	ENGINE	TRANS	TRIM	DESCRIPTION
		1	2, 6	L	11, 12, 14, 15, 16	EX8	DGZ		
		1	2, 6	L	51, 52, 54, 55, 56	EX8	DGZ		
		1	3, 7	L	02, 06	EX8	DGZ		
		1	3, 7	L	12, 15, 16	EX8	DGZ		
6									CLAMP, Boot
	5133 900AA	1	2, 6	L	01, 02, 06	EX8	DGZ		
		1	2, 6	L	11, 12, 14, 15, 16	EX8	DGZ		
		1	2, 6	L	51, 52, 54, 55, 56	EX8	DGZ		
		1	3, 7	L	02, 06	EX8	DGZ		
		1	3, 7	L	12, 15, 16	EX8	DGZ		
7									BOOT, Driveshaft
	5133 897AA	1	2, 6	L	01, 02, 06	EX8	DGZ		
		1	2, 6	L	11, 12, 14, 15, 16	EX8	DGZ		
		1	2, 6	L	51, 52, 54, 55, 56	EX8	DGZ		
		1	3, 7	L	02, 06	EX8	DGZ		
		1	3, 7	L	12, 15, 16	EX8	DGZ		
8									CLAMP, Boot
	5133 899AA	1	2, 6	L	01, 02, 06	EX8	DGZ		
		1	2, 6	L	11, 12, 14, 15, 16	EX8	DGZ		
		1	2, 6	L	51, 52, 54, 55, 56	EX8	DGZ		
		1	3, 7	L	02, 06	EX8	DGZ		
		1	3, 7	L	12, 15, 16	EX8	DGZ		

Refer to Model Legend Information Bookmark

AR = Use as required - = Non illustrated part # = New this model year

March 3, 2006

« RETURN TO GROUP INDEX

Shaft,Propeller,Rear,3 Piece
Figure 016-130

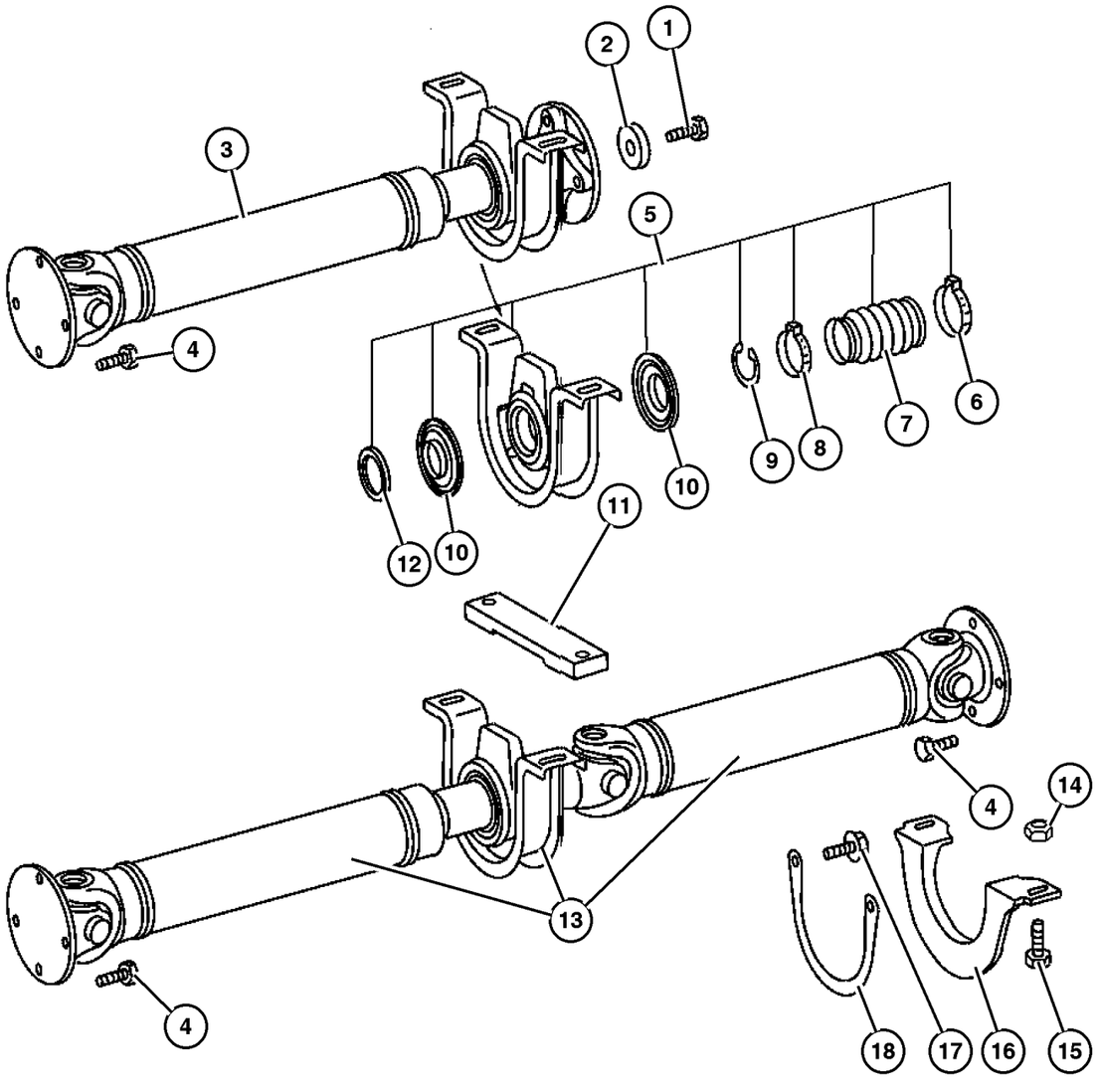

ITEM	PART NUMBER	QTY	LINE	SERIES	BODY	ENGINE	TRANS	TRIM	DESCRIPTION
9									SNAP RING, Purchase Item 5, (NOT SERVICED) (Not Serviced)
10									BOOT, Driveshaft
	5133 898AA	1	2, 6	L	01, 02, 06	EX8	DGZ		
		1	2, 6	L	11, 12, 14, 15, 16	EX8	DGZ		
		1	2, 6	L	51, 52, 54, 55, 56	EX8	DGZ		
		1	3, 7	L	02, 06	EX8	DGZ		
		1	3, 7	L	12, 15, 16	EX8	DGZ		
11	5129 044AA	2		L			DGZ		SHIM, Drive Shaft Bearing
12									THRUST WASHER, Purchase Item 5, (NOT SERVICED) (Not Serviced)
13									SHAFT, Drive, Rear, Rear section
	5104 084AA	1	2, 6	L	06	EX8	DGZ		
		1	2, 6	L	11, 12, 14, 15, 16	EX8	DGZ		
		1	2, 6	L	51, 52, 54, 55, 56	EX8	DGZ		
		1	3, 7	L	06	EX8	DGZ		
		1	3, 7	L	12, 15, 16	EX8	DGZ		
14									NUT
	6104 718AA	2	2, 6	L	01, 02, 06	EX8	DGZ		
		2	2, 6	L	11, 12, 14, 15, 16	EX8	DGZ		
		2	2, 6	L	51, 52, 54, 55, 56	EX8	DGZ		
		2	3, 7	L	02, 06	EX8	DGZ		
		2	3, 7	L	12, 15, 16	EX8	DGZ		
15									BOLT, Hex
	5133 896AA	4	2, 6	L	06	EX8	DGZ		

Refer to Model Legend Information Bookmark

AR = Use as required - = Non illustrated part # = New this model year

March 3, 2006

« RETURN TO GROUP INDEX

Shaft,Propeller,Rear,3 Piece
Figure 016-130

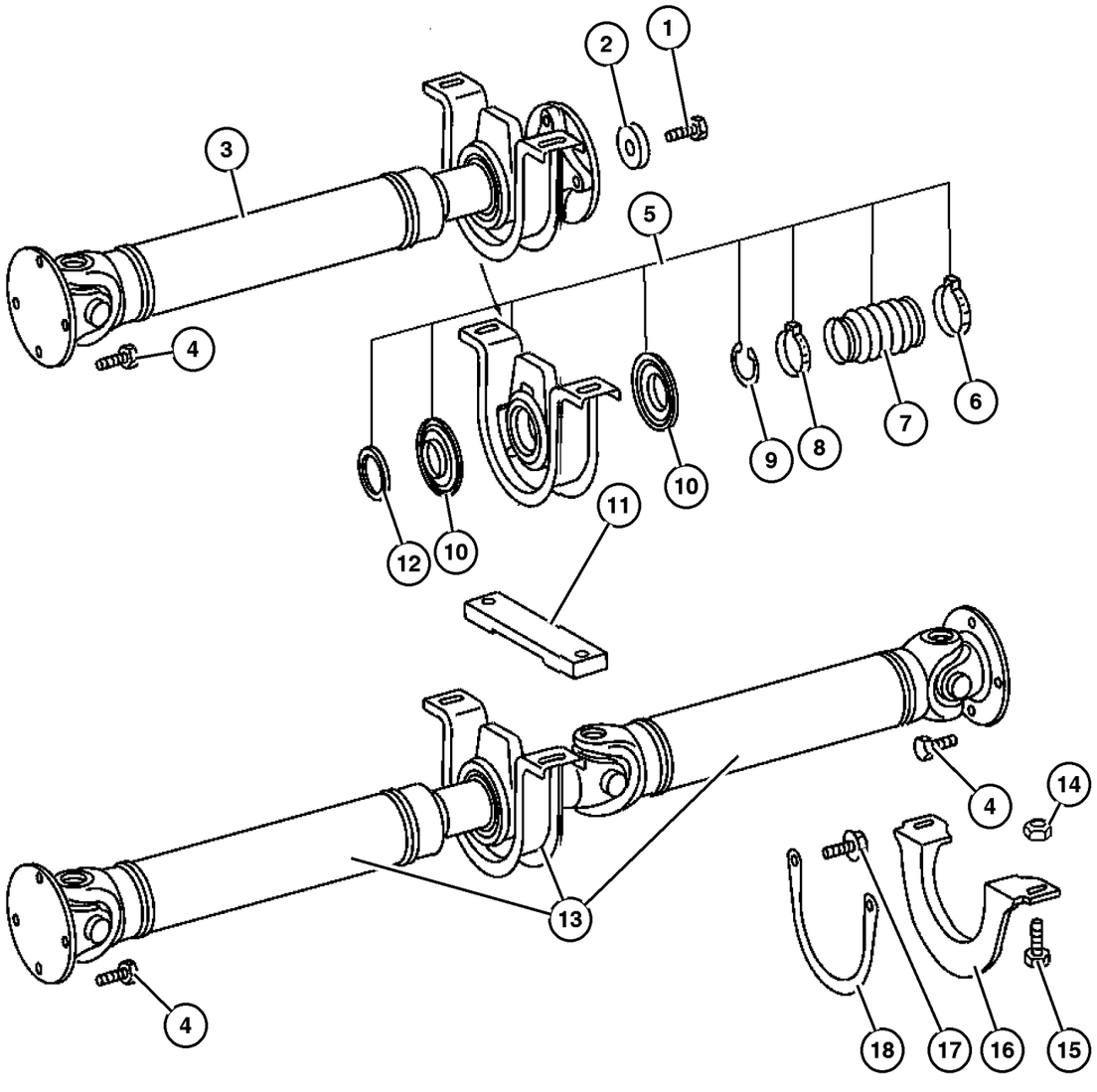

ITEM	PART NUMBER	QTY	LINE	SERIES	BODY	ENGINE	TRANS	TRIM	DESCRIPTION
		4	2, 6	L	11, 12, 14, 15, 16	EX8	DGZ		
		4	2, 6	L	51, 52, 54, 55, 56	EX8	DGZ		
		4	3, 7	L	06	EX8	DGZ		
		4	3, 7	L	12, 15, 16	EX8	DGZ		
16									BRACKET, Prop Shaft
	5119 133AA	2	2, 6	L	06	EX8	DGZ		
		2	2, 6	L	11, 12, 14, 15, 16	EX8	DGZ		
		2	2, 6	L	51, 52, 54, 55, 56	EX8	DGZ		
		2	3, 7	L	06	EX8	DGZ		
		2	3, 7	L	12, 15, 16	EX8	DGZ		
17									SCREW
	6104 234AA	2	2, 6	L	01, 02, 06	EX8	DGZ		
		2	2, 6	L	11, 12, 14, 15, 16	EX8	DGZ		
		2	2, 6	L	51, 52, 54, 55, 56	EX8	DGZ		
		2	3, 7	L	02, 06	EX8	DGZ		
		2	3, 7	L	12, 15, 16	EX8	DGZ		
18									STRAP, Prop Shaft
	5119 131AA	1	2, 6	L	01, 02, 06	EX8	DGZ		
		1	2, 6	L	11, 12, 14, 15, 16	EX8	DGZ		
		1	2, 6	L	51, 52, 54, 55, 56	EX8	DGZ		
		1	3, 7	L	02, 06	EX8	DGZ		
		1	3, 7	L	12, 15, 16	EX8	DGZ		

Refer to Model Legend Information Bookmark

AR = Use as required - = Non illustrated part # = New this model year

March 3, 2006

« RETURN TO GROUP INDEX

Group – 017
Rear Suspension

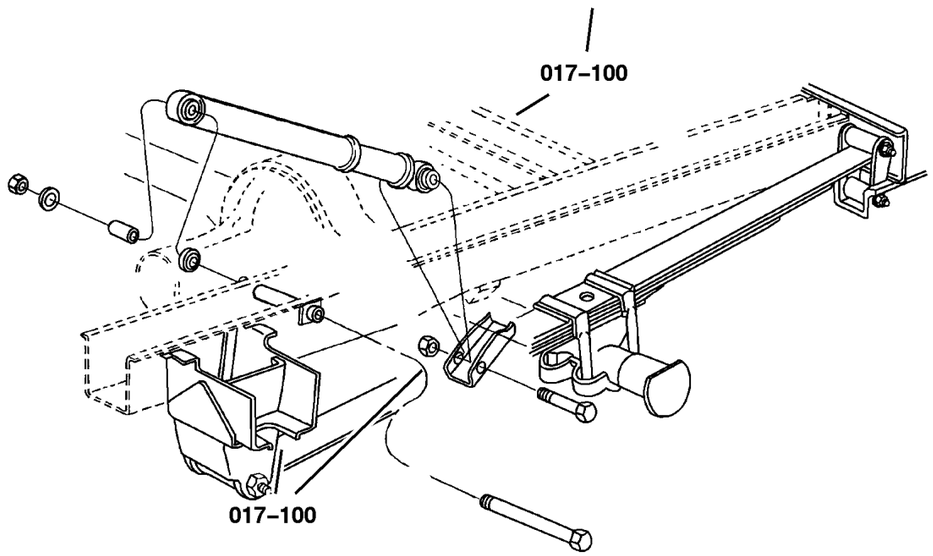

017–100 Rear Suspension	017–200 Rear Stabilizer		
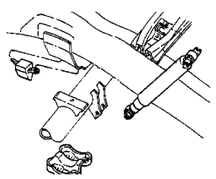	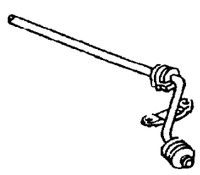		

GROUP 17 - Rear Suspension

Illustration Title	Group-Fig. No.
Rear Suspension	
Rear Shocks	Fig. 017-110
Rear Springs, 2500 Series	Fig. 017-120
Rear Springs, 3500 Series	Fig. 017-130
Rear Stabilizer	
Stabilizer Bar,Rear	Fig. 017-210

Rear Shocks
Figure 017-110

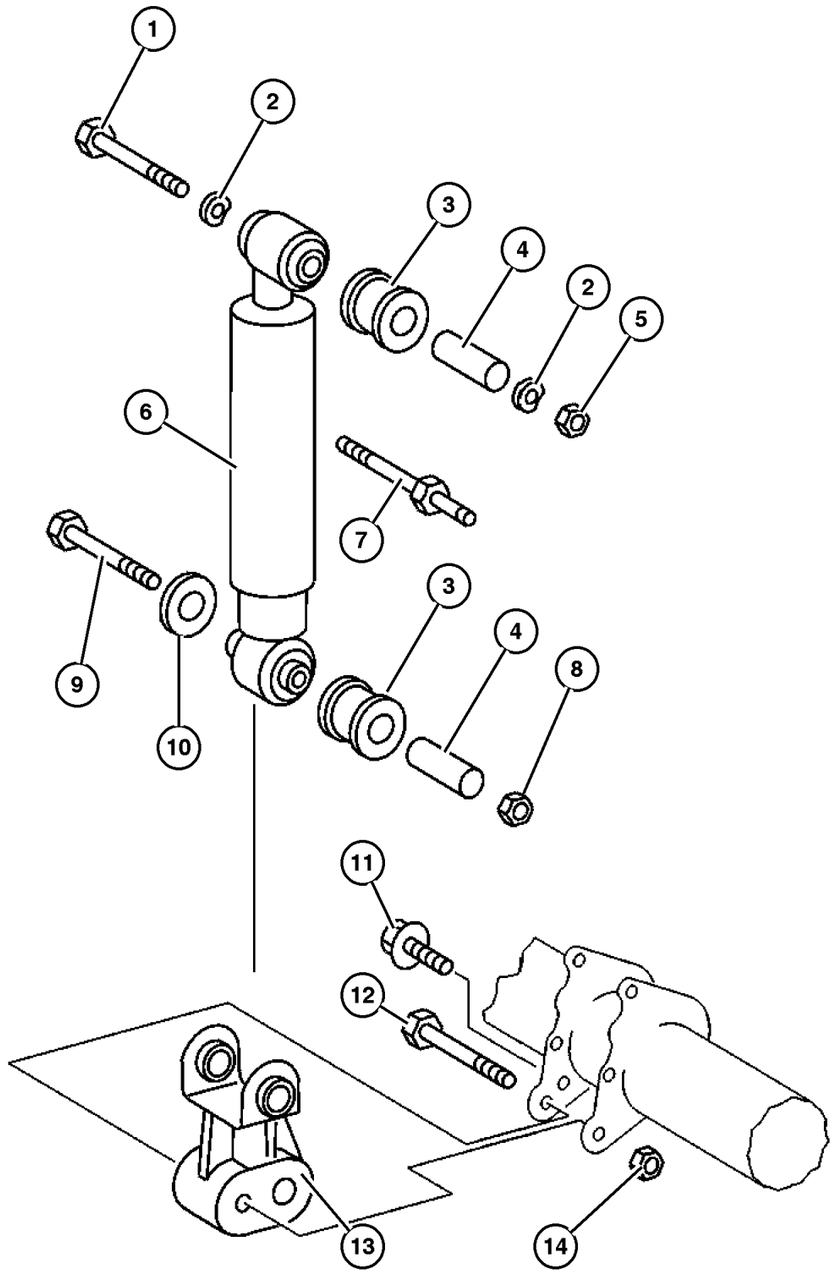

ITEM	PART NUMBER	QTY	LINE	SERIES	BODY	ENGINE	TRANS	TRIM	DESCRIPTION
Note:Sales Codes;									
[WDG]=16X6 Steel Wheels									
[3B5]=Shock Absorbers Reinforced									
1									SCREW
	6104 271AA	2	2, 6	L	01, 02, 06	EX8	DGZ		M14x1.5x150
		2	2, 6	L	11, 12, 14, 15, 16	EX8	DGZ		M14x1.5x150
		2	2, 6	L	51, 52, 54, 55, 56	EX8	DGZ		M14x1.5x150
	6104 265AA	2	3, 7	L	02, 06	EX8	DGZ		M14x1.5x150
		2	3, 7	L	12, 15, 16	EX8	DGZ		M14x1.5x150
2									SPACER, Shock Absorber Bushing
	5133 883AA	4	2, 6	L	01, 02, 06	EX8	DGZ		
		4	2, 6	L	11, 12, 14, 15, 16	EX8	DGZ		
		4	2, 6	L	51, 52, 54, 55, 56	EX8	DGZ		
	5133 876AA	4	3, 7	L	02, 06	EX8	DGZ		
		4	3, 7	L	12, 15, 16	EX8	DGZ		
3									BUSHING, Shock Absorber
	5133 879AA	2	2, 6	L	01, 02, 06	EX8	DGZ		Upper
	5133 880AA	4	2, 6	L	01, 02, 06	EX8	DGZ		Lower
	5133 879AA	2	2, 6	L	11, 12, 14, 15, 16	EX8	DGZ		Upper
	5133 880AA	4	2, 6	L	11, 12, 14, 15, 16	EX8	DGZ		Lower
	5133 879AA	2	2, 6	L	51, 52, 54, 55, 56	EX8	DGZ		Upper
	5133 880AA	4	2, 6	L	51, 52, 54, 55, 56	EX8	DGZ		Lower
	5133 873AA	4	3, 7	L	02, 06	EX8	DGZ		Upper or Lower

Refer to Model Legend Information Bookmark

AR = Use as required - = Non illustrated part # = New this model year

March 3, 2006

« RETURN TO GROUP INDEX »

Rear Shocks
Figure 017-110

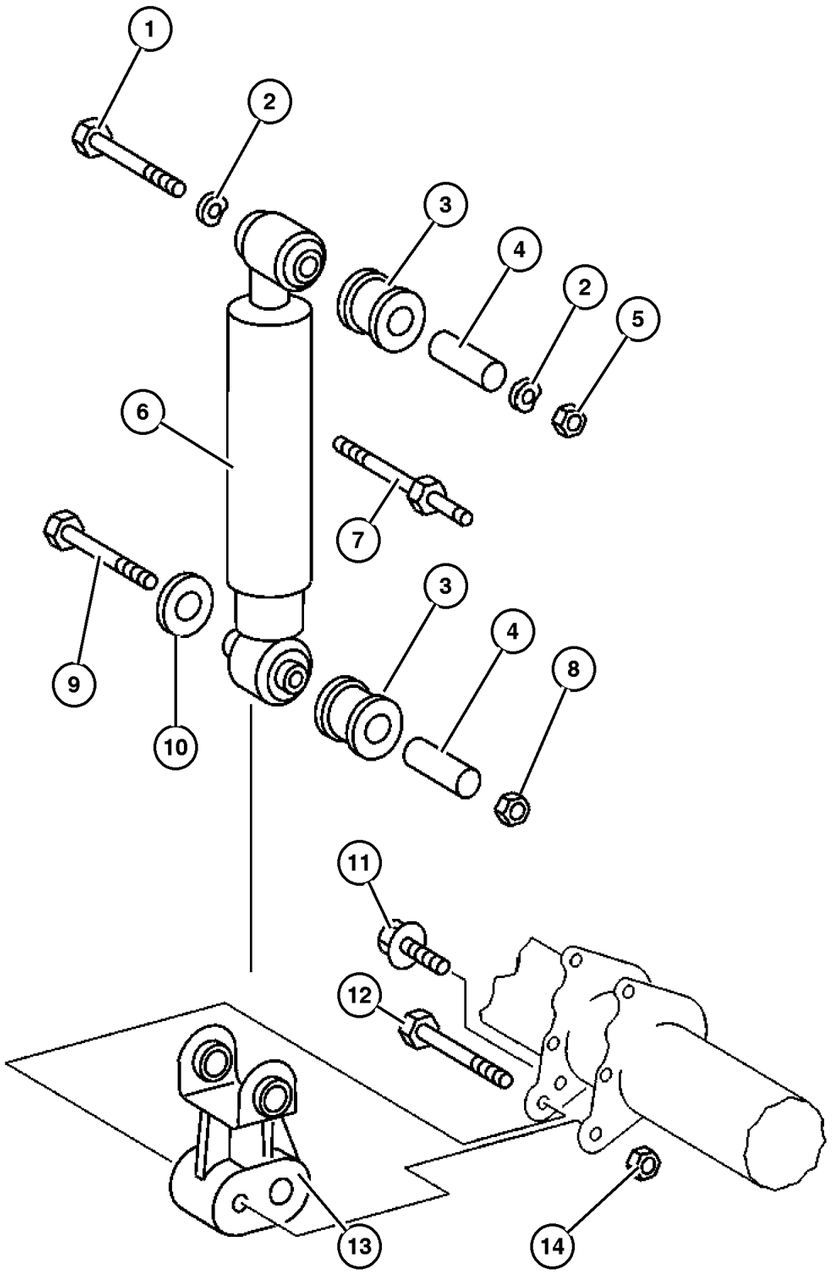

ITEM	PART NUMBER	QTY	LINE	SERIES	BODY	ENGINE	TRANS	TRIM	DESCRIPTION
		4	3, 7	L	12, 15, 16	EX8	DGZ		Upper or Lower
4									SLEEVE, Shock Absorber
	5133 881AA	2	2, 6	L	01, 02, 06	EX8	DGZ		Upper
	5133 882AA	2	2, 6	L	01, 02, 06	EX8	DGZ		Lower
	5133 881AA	2	2, 6	L	11, 12, 14, 15, 16	EX8	DGZ		Upper
	5133 882AA	2	2, 6	L	11, 12, 14, 15, 16	EX8	DGZ		Lower
	5133 881AA	2	2, 6	L	51, 52, 54, 55, 56	EX8	DGZ		Upper
	5133 882AA	2	2, 6	L	51, 52, 54, 55, 56	EX8	DGZ		Lower
	5133 874AA	2	3, 7	L	02, 06	EX8	DGZ		Upper
	5133 875AA	2	3, 7	L	02, 06	EX8	DGZ		Lower
	5133 874AA	2	3, 7	L	12, 15, 16	EX8	DGZ		Upper
	5133 875AA	2	3, 7	L	12, 15, 16	EX8	DGZ		Lower
5									NUT
	6104 719AA	2	2, 6	L	01, 02, 06	EX8	DGZ		M14x1.5
		2	2, 6	L	11, 12, 14, 15, 16	EX8	DGZ		M14x1.5
		2	2, 6	L	51, 52, 54, 55, 56	EX8	DGZ		M14x1.5
		2	3, 7	L	02, 06	EX8	DGZ		M14x1.5
		2	3, 7	L	12, 15, 16	EX8	DGZ		M14x1.5
6									SHOCK ABSORBER, Suspension, Rear
	5104 061AA	2	2, 6	L	01, 02, 06	EX8	DGZ		[3B5]
		2	2, 6	L	11, 12, 14, 15, 16	EX8	DGZ		[3B5]

Refer to Model Legend Information Bookmark

Rear Shocks
Figure 017-110

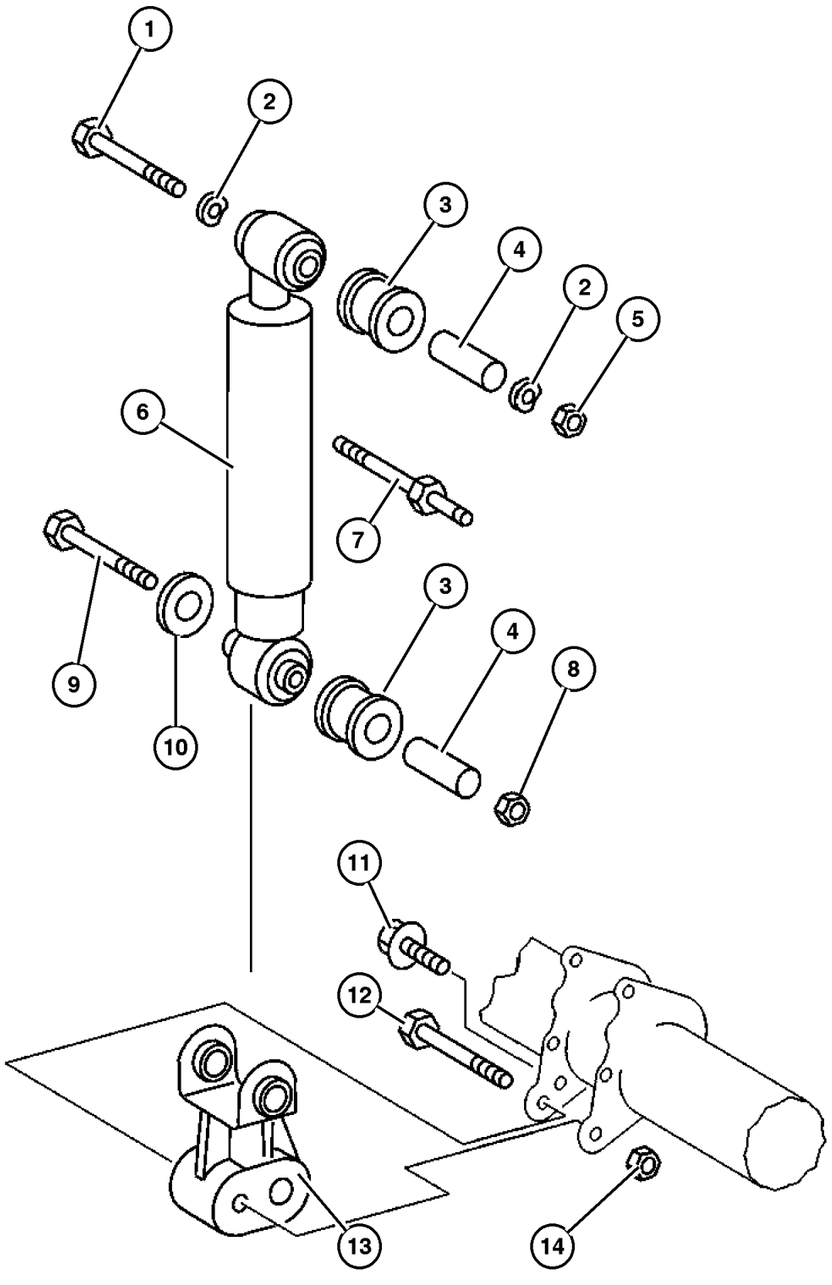

ITEM	PART NUMBER	QTY	LINE	SERIES	BODY	ENGINE	TRANS	TRIM	DESCRIPTION
		2	2, 6	L	51, 52,	EX8	DGZ		[3B5]
	5127 644AA	2	2, 6	L	54, 55, 56 01, 02, 06	EX8	DGZ		[3B5,WDG]
		2	2, 6	L	11, 12, 14, 15, 16	EX8	DGZ		[3B5,WDG]
		2	2, 6	L	51, 52,	EX8	DGZ		[3B5,WDG]
	5118 646AA	2	2, 6	L	54, 55, 56 01, 02, 06	EX8	DGZ		Without [3B5,WDG]
		2	2, 6	L	11, 12, 14, 15, 16	EX8	DGZ		Without [3B5,WDG]
		2	2, 6	L	51, 52,	EX8	DGZ		Without [3B5,WDG]
	5118 648AA	2	3, 7	L	54, 55, 56 02, 06	EX8	DGZ		
		2	3, 7	L	12, 15, 16	EX8	DGZ		
7	5118 796AA	1	2, 6	L	01, 02, 06	EX8	DGZ		BOLT
		1	2, 6	L	11, 12, 14, 15, 16	EX8	DGZ		
		1	2, 6	L	51, 52,	EX8	DGZ		
8	6104 718AA	2	2, 6	L	54, 55, 56 01, 02, 06	EX8	DGZ		NUT
		2	2, 6	L	11, 12, 14, 15, 16	EX8	DGZ		
		2	2, 6	L	51, 52, 54, 55, 56	EX8	DGZ		
		2	3, 7	L	02, 06	EX8	DGZ		
		2	3, 7	L	12, 15, 16	EX8	DGZ		
9									SCREW

Refer to Model Legend Information Bookmark

AR = Use as required - = Non illustrated part # = New this model year

March 3, 2006

« RETURN TO GROUP INDEX

Rear Shocks
Figure 017-110

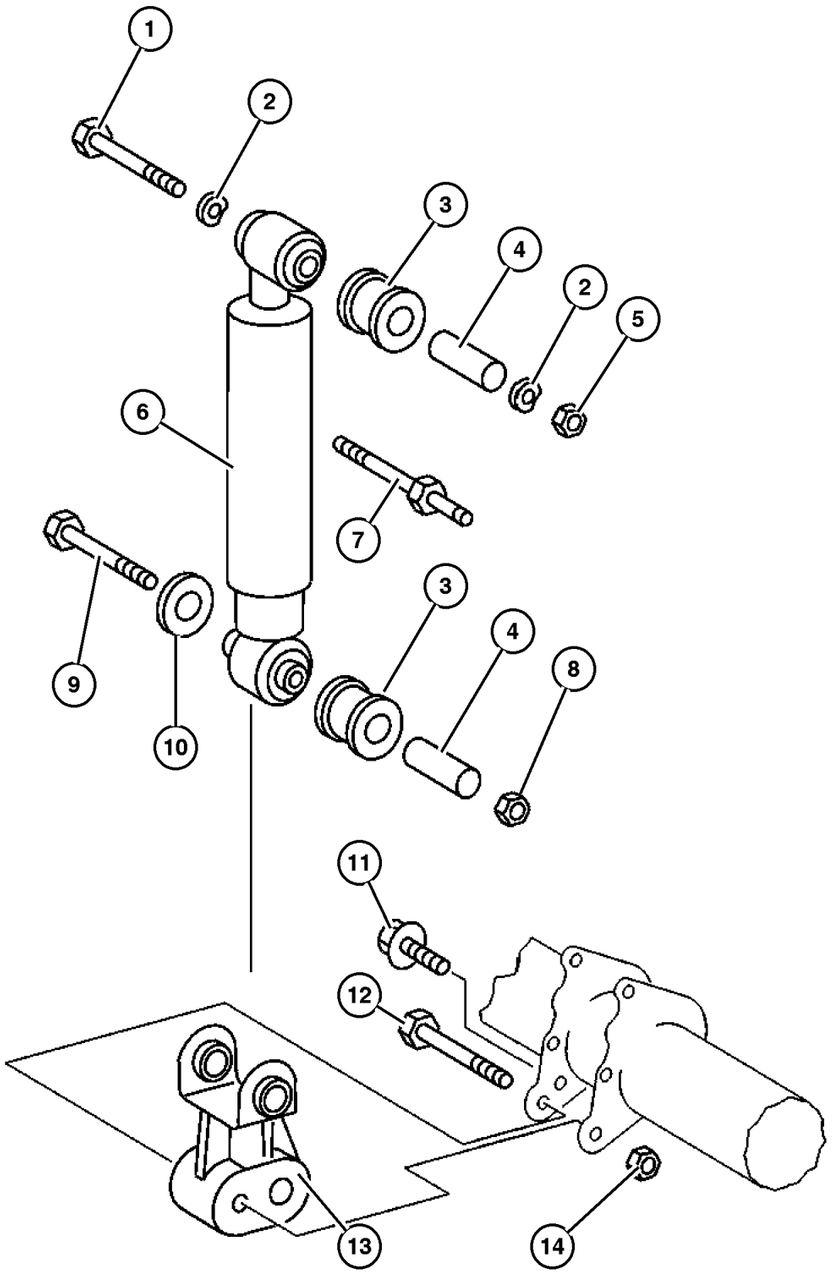

ITEM	PART NUMBER	QTY	LINE	SERIES	BODY	ENGINE	TRANS	TRIM	DESCRIPTION
	6104 241AA	2	2, 6	L	01, 02, 06	EX8	DGZ		M12x1.5x65
		2	2, 6	L	11, 12, 14, 15, 16	EX8	DGZ		M12x1.5x65
		2	2, 6	L	51, 52, 54, 55, 56	EX8	DGZ		M12x1.5x65
	6104 270AA	2	3, 7	L	02, 06	EX8	DGZ		M12x1.5x65
		2	3, 7	L	12, 15, 16	EX8	DGZ		M12x1.5x65
10									WASHER, Shock Absorber
	5133 877AA	4	3, 7	L	02, 06	EX8	DGZ		
		4	3, 7	L	12, 15, 16	EX8	DGZ		
11	6104 223AA	1	2, 3, 6, 7				DGZ		BOLT
12									SCREW
	6104 243AA	2	2, 6	L	11, 12, 14, 15, 16	EX8	DGZ		M12x1.5x80
		2	2, 6	L	51, 52, 54, 55, 56	EX8	DGZ		M12x1.5x80
13									BRACKET, (NOT SERVICED) (Not Serviced)
14									NUT
	6104 717AA	4	2, 6	L	01, 02, 06	EX8	DGZ		M10x1.5
		4	2, 6	L	11, 12, 14, 15, 16	EX8	DGZ		M10x1.5
		4	2, 6	L	51, 52, 54, 55, 56	EX8	DGZ		M10x1.5
		4	3, 7	L	02, 06	EX8	DGZ		M10x1.5
		4	3, 7	L	12, 15, 16	EX8	DGZ		M10x1.5
	6104 718AA	2	2, 6	L	01, 02, 06	EX8	DGZ		M12x1.5
		2	2, 6	L	11, 12, 14, 15, 16	EX8	DGZ		M12x1.5
		2	2, 6	L	51, 52, 54, 55, 56	EX8	DGZ		M12x1.5

Refer to Model Legend Information Bookmark

AR = Use as required - = Non illustrated part # = New this model year

March 3, 2006

« RETURN TO GROUP INDEX

Rear Shocks
Figure 017-110

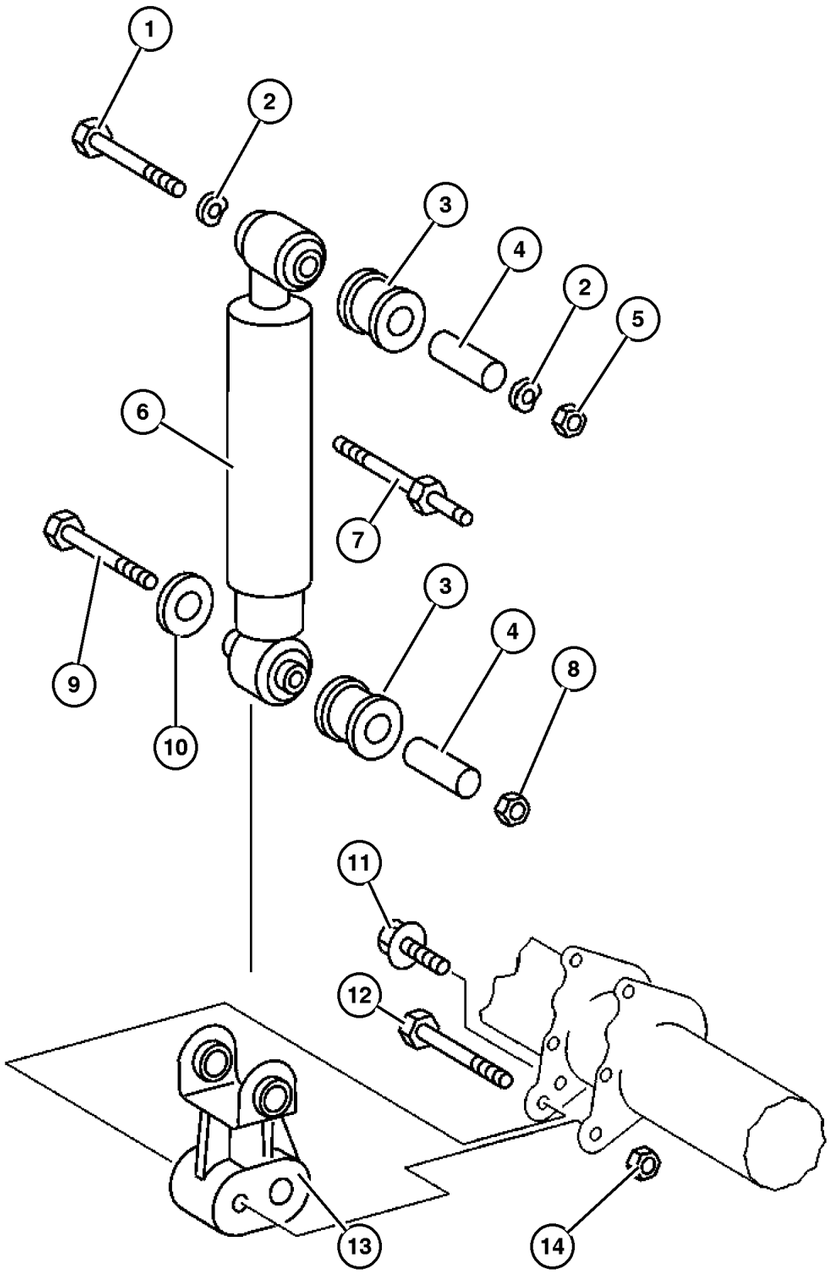

ITEM	PART NUMBER	QTY	LINE	SERIES	BODY	ENGINE	TRANS	TRIM	DESCRIPTION
		2	3, 7	L	02, 06	EX8	DGZ		M12x1.5
		2	3, 7	L	12, 15, 16	EX8	DGZ		M12x1.5

Refer to Model Legend Information Bookmark

Rear Springs, 2500 Series
Figure 017-120

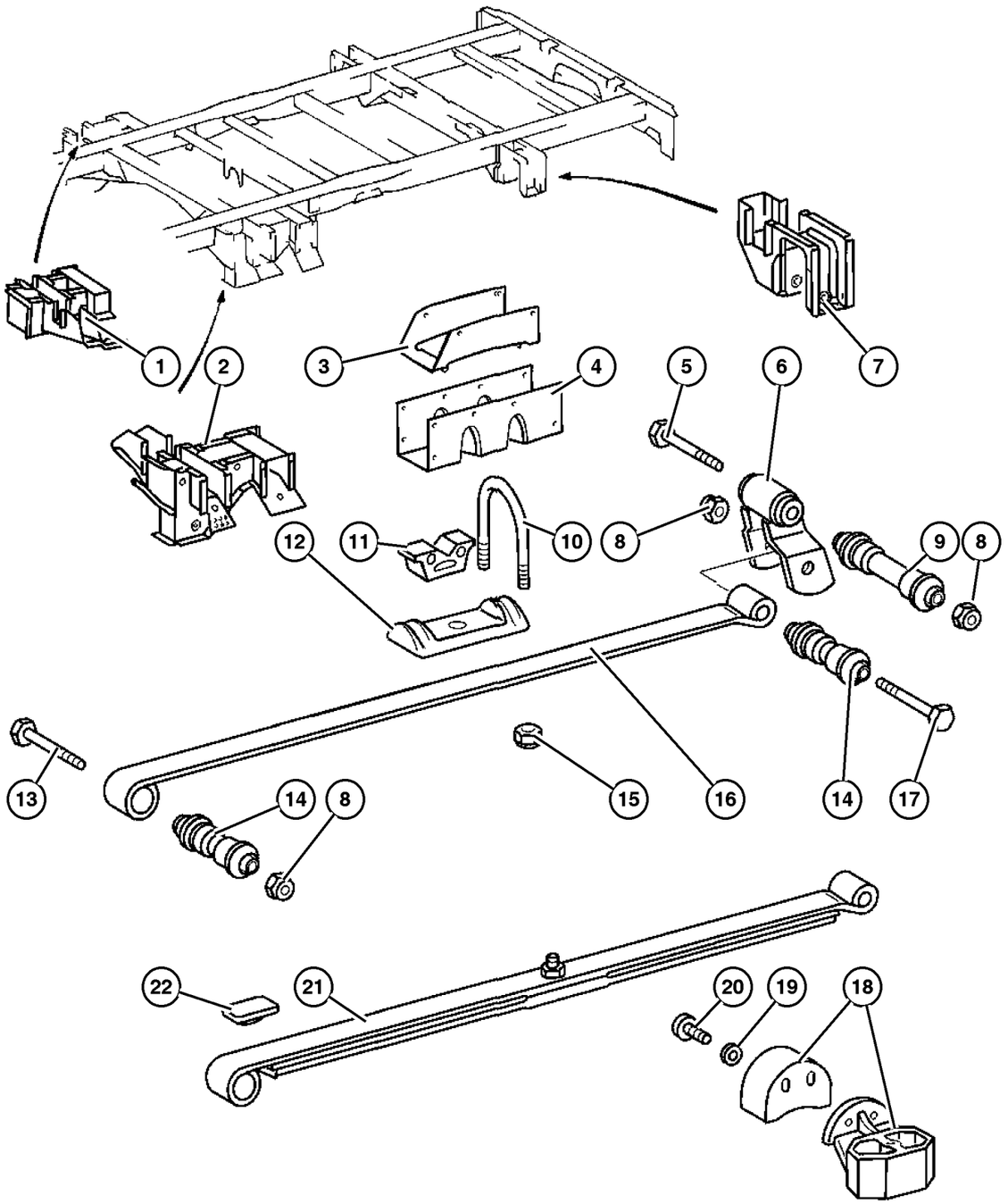

ITEM	PART NUMBER	QTY	LINE	SERIES	BODY	ENGINE	TRANS	TRIM	DESCRIPTION
1									BRACKET, Spring Shackle
	5118 676AA	2	2, 6	L	01, 02, 06	EX8	DGZ		Right or Left
	5118 672AA	1	2, 6	L	11, 14	EX8	DGZ		Right Front
	5118 670AA	1	2, 6	L	12, 15, 16	EX8	DGZ		Right Front
	5118 672AA	1	2, 6	L	51, 54	EX8	DGZ		Right Front
	5118 670AA	1	2, 6	L	52, 55, 56	EX8	DGZ		Right Front
2									BRACKET, Spring Shackle
	5128 553AA	1	2, 6	L	11, 14	EX8	DGZ		
	5118 668AA	1	2, 6	L	12, 15, 16	EX8	DGZ		
	5128 553AA	1	2, 6	L	51, 54	EX8	DGZ		
	5118 668AA	1	2, 6	L	52, 55, 56	EX8	DGZ		
3									BRACKET
	5118 337AA	2	2, 6	L	01, 02, 06	EX8	DGZ		
		2	2, 6	L	11, 12, 14, 15, 16	EX8	DGZ		
		2	2, 6	L	51, 52, 54, 55, 56	EX8	DGZ		
4									TRUSS, leaf spring
	5118 347AA	2	2, 6	L	01, 02, 06	EX8	DGZ		
		2	2, 6	L	11, 14	EX8	DGZ		With [CMZ+4XZ]
		2	2, 6	L	12, 15, 16	EX8	DGZ		Without [CMZ+4XZ]
	5128 390AA	2	2, 6	L	12, 15, 16	EX8	DGZ		With [4XZ]
	5118 347AA	2	2, 6	L	51, 54	EX8	DGZ		With [4XZ]
		2	2, 6	L	52, 55, 56	EX8	DGZ		Without [4XZ]
	5128 390AA	2	2, 6	L	52, 55, 56	EX8	DGZ		With [4XZ]
5									BOLT
	5118 734AA	2	2, 6	L	01, 02, 06	EX8	DGZ		Shackle to Frame, Mounting
		2	2, 6	L	11, 12, 14, 15, 16	EX8	DGZ		Shackle to Frame, Mounting

Refer to Model Legend Information Bookmark

AR = Use as required - = Non illustrated part # = New this model year

March 3, 2006

« RETURN TO GROUP INDEX

»

Rear Springs, 2500 Series
Figure 017-120

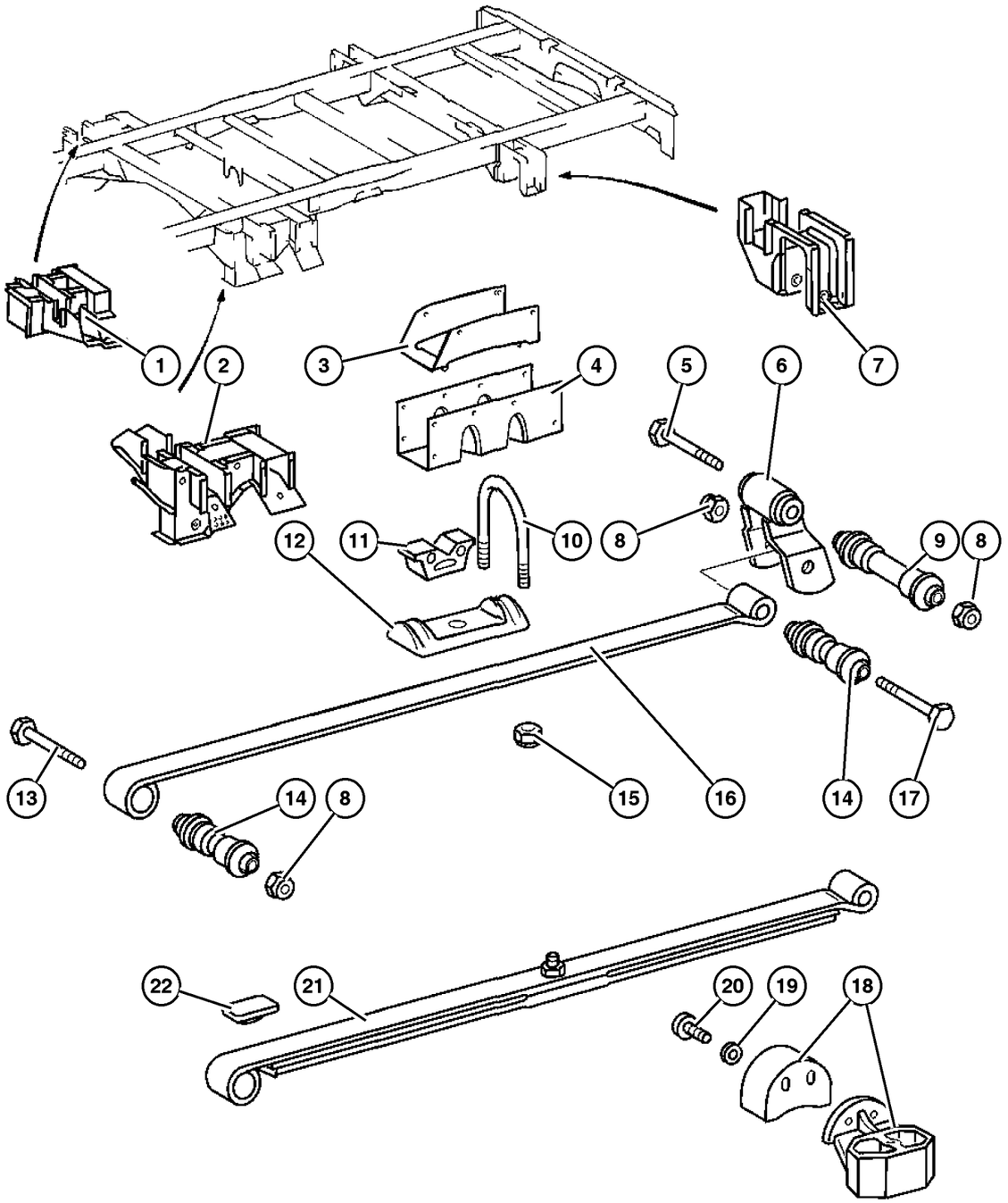

ITEM	PART NUMBER	QTY	LINE	SERIES	BODY	ENGINE	TRANS	TRIM	DESCRIPTION
		2	2, 6	L	51, 52, 54, 55, 56	EX8	DGZ		Shackle to Frame, Mounting
6									SHACKLE, Spring
	5118 653AA	2	2, 6	L	01, 02, 06	EX8	DGZ		
		2	2, 6	L	11, 12, 14, 15, 16	EX8	DGZ		
		2	2, 6	L	51, 52, 54, 55, 56	EX8	DGZ		
7									BRACKET, Spring Shackle
	5118 663AA	2	2, 6	L	01, 02, 06	EX8	DGZ		Without [4XZ]
	5136 654AA	2	2, 6	L	01, 02, 06	EX8	DGZ		[4XZ]
	5128 557AA	2	2, 6	L	11, 14	EX8	DGZ		[4XZ]
	5128 559AA	2	2, 6	L	12, 15	EX8	DGZ		[4XZ]
	5128 561AA	2	2, 6	L	16	EX8	DGZ		[4XZ]
	5128 557AA	2	2, 6	L	51, 54	EX8	DGZ		[4XZ]
	5128 559AA	2	2, 6	L	52, 55	EX8	DGZ		[4XZ]
	5128 561AA	2	2, 6	L	56	EX8	DGZ		[4XZ]
8									NUT
	6104 718AA	8	2, 6	L	01, 02, 06	EX8	DGZ		Shackle to Frame and Spring, Mounting
		8	2, 6	L	11, 12, 14, 15, 16	EX8	DGZ		Shackle to Frame and Spring, Mounting
		8	2, 6	L	51, 52, 54, 55, 56	EX8	DGZ		Shackle to Frame and Spring, Mounting
9									BUSHING, shackle
	5118 731AA	2	2, 6	L	01, 02, 06	EX8	DGZ		
		2	2, 6	L	11, 12, 14, 15, 16	EX8	DGZ		
		2	2, 6	L	51, 52, 54, 55, 56	EX8	DGZ		
10									U-BOLT
	5104 069AA	4	2, 6	L	01, 02, 06	EX8	DGZ		

Refer to Model Legend Information Bookmark

AR = Use as required - = Non illustrated part # = New this model year

March 3, 2006

« RETURN TO GROUP INDEX

« »

Rear Springs, 2500 Series
Figure 017-120

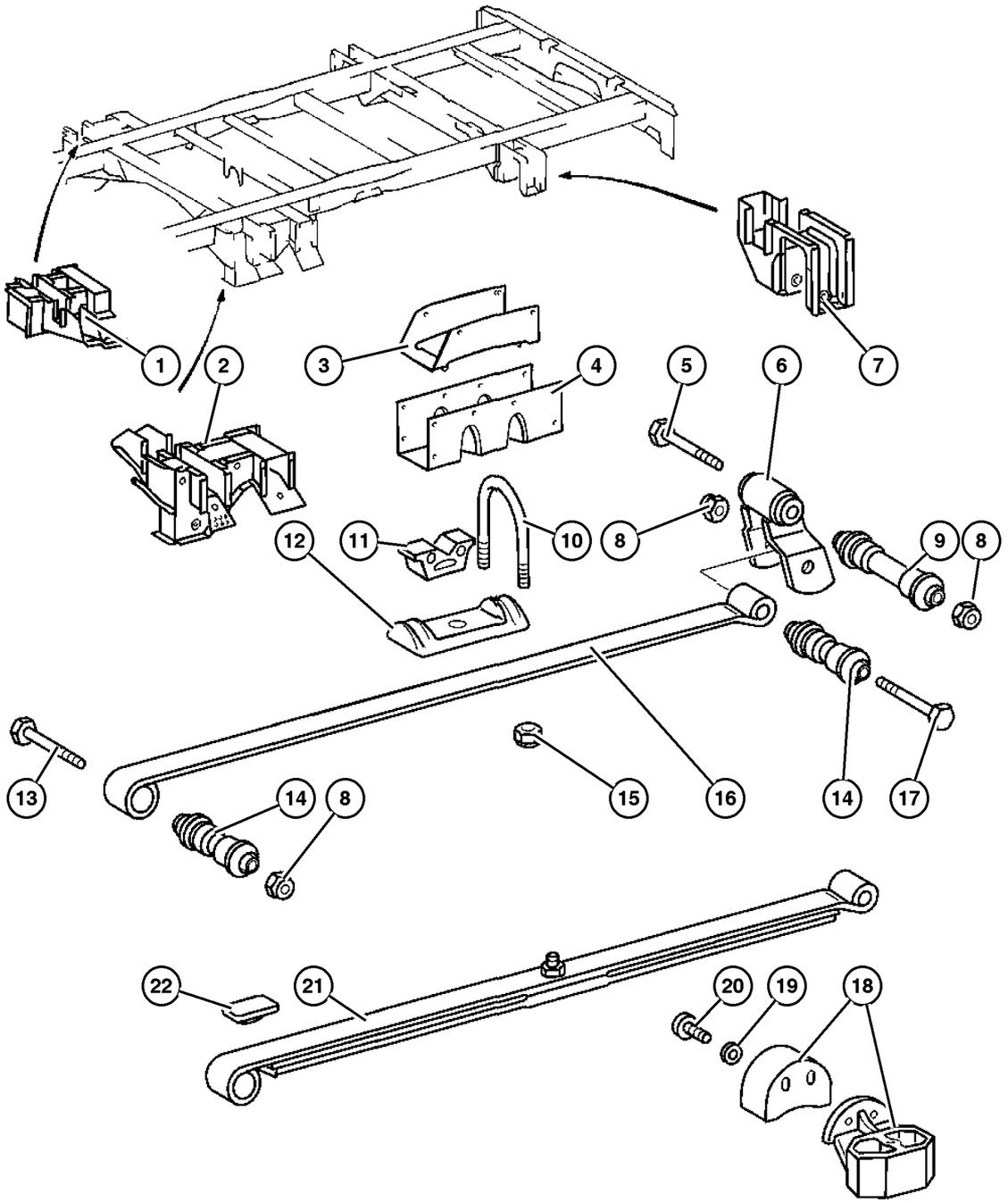

ITEM	PART NUMBER	QTY	LINE	SERIES	BODY	ENGINE	TRANS	TRIM	DESCRIPTION
		4	2, 6	L	11, 12,	EX8	DGZ		
	5104 070AA	4	2, 6	L	14, 15, 16 51, 52, 54, 55, 56	EX8	DGZ		
11									BUMPER, Jounce
	5118 762AA	2	2, 6	L	01, 02, 06	EX8	DGZ		Without [WDG]
		2	2, 6	L	11, 12, 14, 15, 16	EX8	DGZ		Without [WDG]
		2	2, 6	L	51, 52, 54, 55, 56	EX8	DGZ		Without [WDG]
	5128 586AA	2	2, 6	L	01, 02, 06	EX8	DGZ		With [WDG]
		2	2, 6	L	11, 12, 14, 15, 16	EX8	DGZ		With [WDG]
		2	2, 6	L	51, 52, 54, 55, 56	EX8	DGZ		With [WDG]
12									PLATE, Rear Spring U-Bolt
	5118 774AA	2	2, 6	L	01, 02, 06	EX8	DGZ		
		2	2, 6	L	11, 12, 14, 15, 16	EX8	DGZ		
		2	2, 6	L	51, 52, 54, 55, 56	EX8	DGZ		
13									BOLT
	6104 247AA	2	2, 6	L	01, 02, 06	EX8	DGZ		Spring to Frame, Mounting
		2	2, 6	L	11, 12, 14, 15, 16	EX8	DGZ		Spring to Frame, Mounting
		2	2, 6	L	51, 52, 54, 55, 56	EX8	DGZ		Spring to Frame, Mounting
14									BUSHING, Spring
	5118 732AA	4	2, 6	L	01, 02, 06	EX8	DGZ		

Refer to Model Legend Information Bookmark

Rear Springs, 2500 Series
Figure 017-120

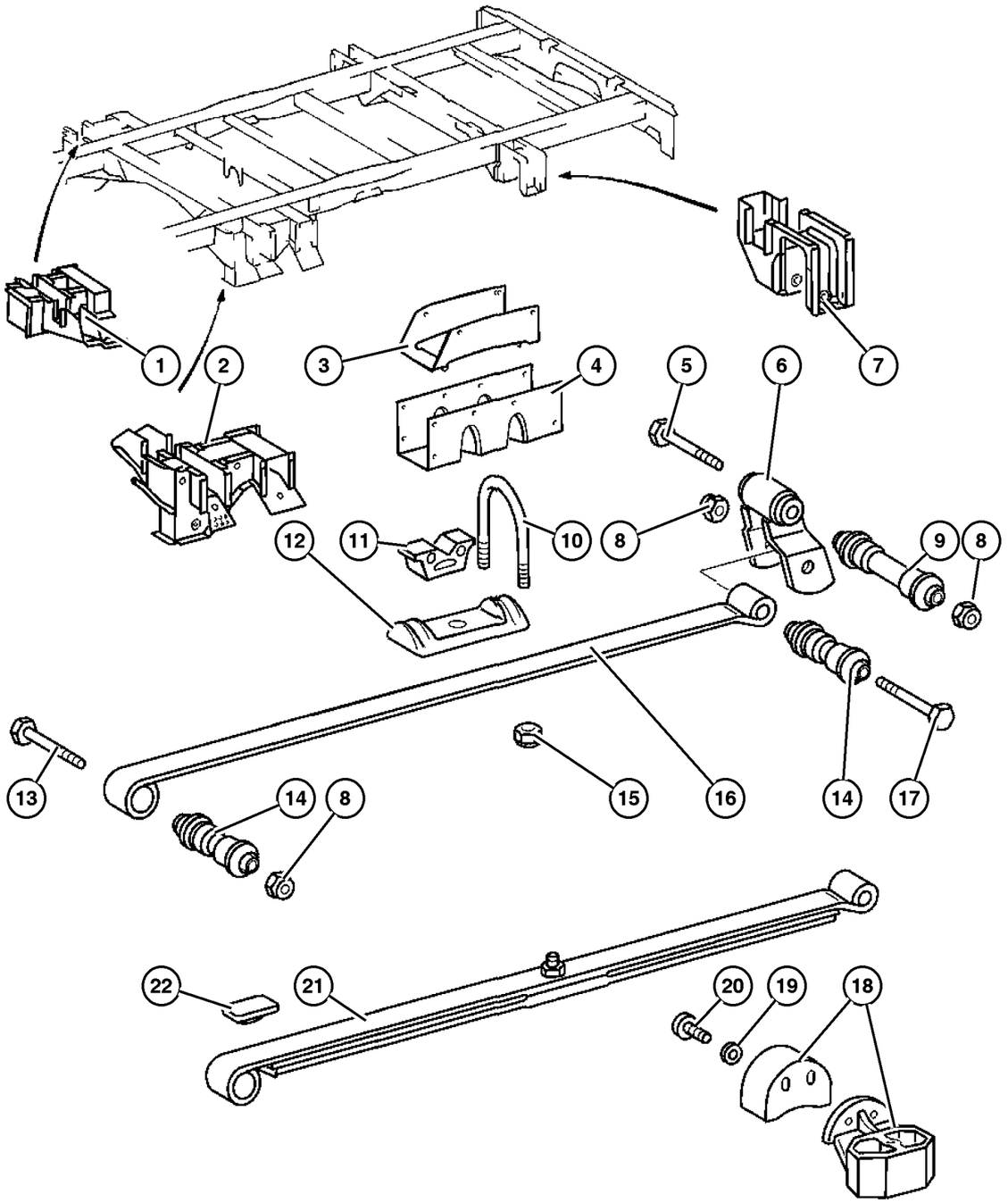

ITEM	PART NUMBER	QTY	LINE	SERIES	BODY	ENGINE	TRANS	TRIM	DESCRIPTION
		4	2, 6	L	11, 12, 14, 15, 16	EX8	DGZ		
		4	2, 6	L	51, 52, 54, 55, 56	EX8	DGZ		
15									NUT
	5103 727AA	8	2, 6	L	01, 02, 06	EX8	DGZ		U-Bolt, Mounting
		8	2, 6	L	11, 12, 14, 15, 16	EX8	DGZ		U-Bolt, Mounting
		8	2, 6	L	51, 52, 54, 55, 56	EX8	DGZ		U-Bolt, Mounting
16									SPRING, Rear
	5118 616AA	2	2, 6	L	01, 02, 06	EX8	DGZ		[4E9]
		2	2, 6	L	11, 12, 14, 15, 16	EX8	DGZ		[4E9]
	5128 482AA	2	2, 6	L	01, 02, 06	EX8	DGZ		[4E9+3AT]
		2	2, 6	L	11, 12, 14, 15, 16	EX8	DGZ		[4E9+3AT]
	5128 486AA	2	2, 6	L	01, 02, 06	EX8	DGZ		[4E9+SNB]
		2	2, 6	L	11, 12, 14, 15, 16	EX8	DGZ		[4E9+SNB]
	5128 488AA	2	2, 6	L	01, 02, 06	EX8	DGZ		[4E9+3AT+WDG]
		2	2, 6	L	11, 12, 14, 15, 16	EX8	DGZ		[4E9+3AT+WDG]
17									BOLT
	5125 718AA	2	2, 6	L	01, 02, 06	EX8	DGZ		Spring to Shackle, Mounting
		2	2, 6	L	11, 12, 14, 15, 16	EX8	DGZ		Spring to Shackle, Mounting
		2	2, 6	L	51, 52, 54, 55, 56	EX8	DGZ		Spring to Shackle, Mounting

Refer to Model Legend Information Bookmark

AR = Use as required - = Non illustrated part # = New this model year

March 3, 2006

« RETURN TO GROUP INDEX

« »

Rear Springs, 2500 Series
Figure 017-120

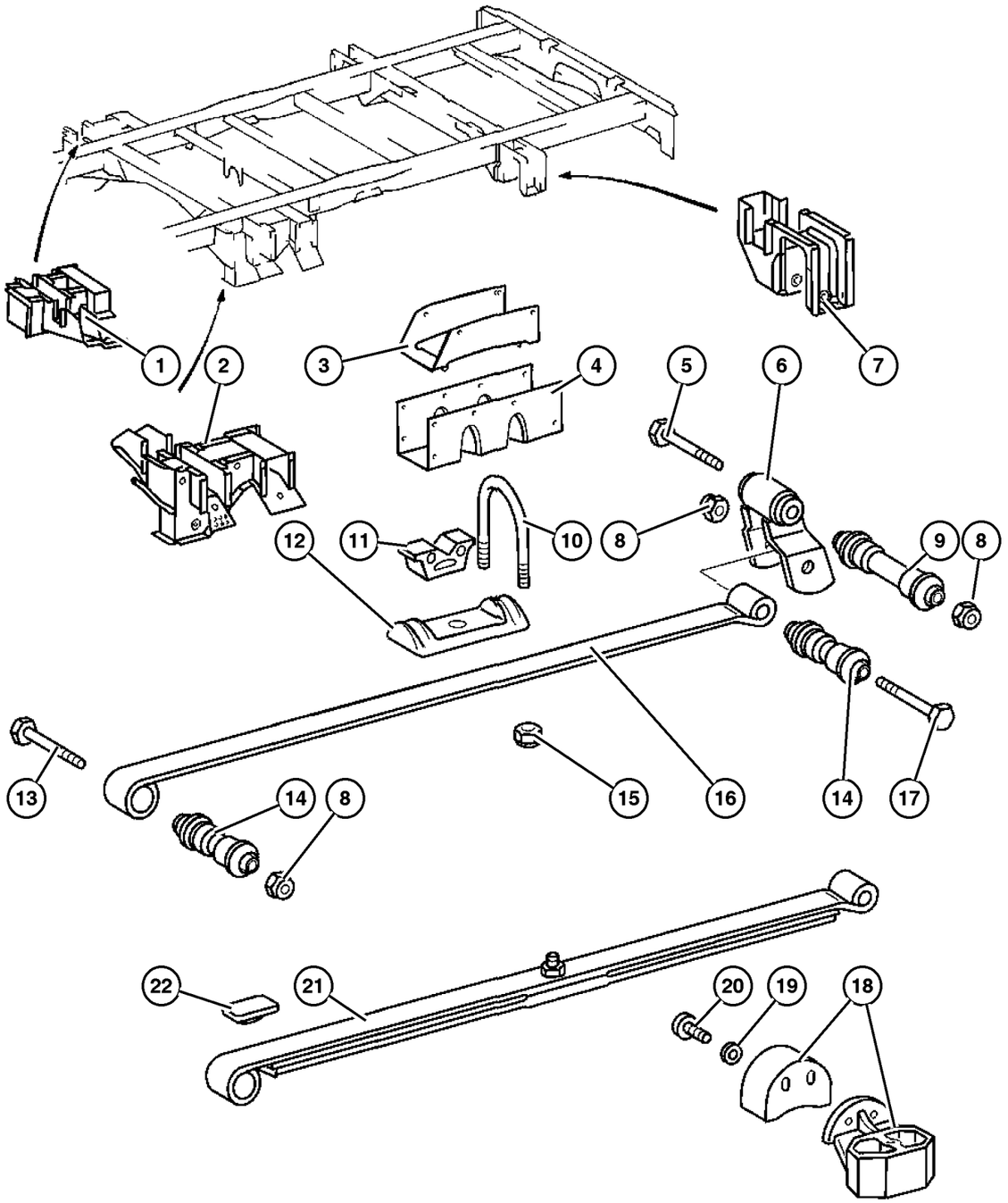

ITEM	PART NUMBER	QTY	LINE	SERIES	BODY	ENGINE	TRANS	TRIM	DESCRIPTION
18									SHIM, (NOT SERVICED) (Not Serviced)
19	5126 126AA	4	2, 6	L	11, 12, 14, 15, 16	EX8	DGZ		NUT
20									BOLT
	5097 678AA	4	2, 6	L	11, 12, 14, 15, 16				
		4	2, 6	L	51, 52, 54, 55, 56				
21									SPRING, Rear
	5118 619AA	2	2, 6	L	51, 52, 54, 55, 56	EX8	DGZ		[4E9]
	5128 484AA	2	2, 6	L	51, 52, 54, 55, 56	EX8	DGZ		[4E9+3B4]
	5128 490AA	2	2, 6	L	51, 52, 54, 55, 56	EX8	DGZ		[4E9+3B4+WDG]
22	5104 068AA	4	2, 6	L	51, 52, 54, 55, 56	EX8	DGZ		CUSHION

Refer to Model Legend Information Bookmark

Rear Springs, 3500 Series
Figure 017-130

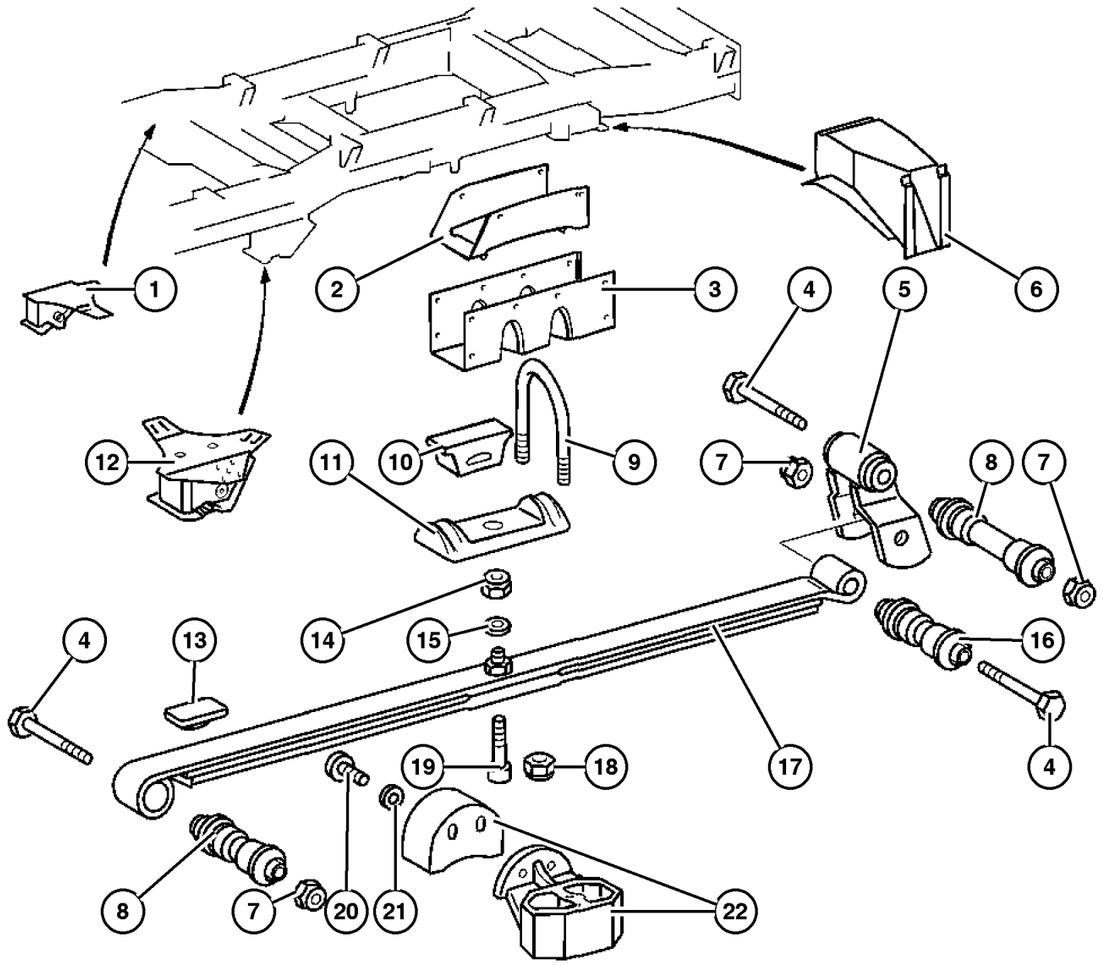

ITEM	PART NUMBER	QTY	LINE	SERIES	BODY	ENGINE	TRANS	TRIM	DESCRIPTION
1	5118 688AA	1	3, 7	L	12, 15, 16	EX8	DGZ		BRACKET, Spring, Right Front
2									BRACKET, Spring
	5118 339AA	2	3, 7	L	02, 06	EX8	DGZ		Right or Left
		2	3, 7	L	12, 15, 16	EX8	DGZ		Right or Left
3									TRUSS, leaf spring
	5118 355AA	2	3, 7	L	02, 06	EX8	DGZ		Right or Left
		2	3, 7	L	12, 15, 16	EX8	DGZ		Right or Left
4									SCREW
	6104 285AA	2	3, 7	L	02, 06	EX8	DGZ		
		2	3, 7	L	12, 15, 16	EX8	DGZ		
5									SHACKLE, Spring
	5118 655AA	2	3, 7	L	02, 06	EX8	DGZ		Right or Left
		2	3, 7	L	12, 15, 16	EX8	DGZ		Right or Left
6	5118 680AA	2	3, 7	L	12, 15, 16	EX8	DGZ		BRACKET, Spring, Right or Left
7									NUT, Hex Flange Lock
	5125 760AA	2	3, 7	L	02, 06	EX8	DGZ		
		2	3, 7	L	12, 15, 16	EX8	DGZ		
8									BUSHING, Spring
	5118 729AA	2	3, 7	L	02, 06	EX8	DGZ		Front
		2	3, 7	L	12, 15, 16	EX8	DGZ		Front
9									U-BOLT
	5118 765AA	4	3, 7	L	02, 06	EX8	DGZ		
		4	3, 7	L	12, 15, 16	EX8	DGZ		
10									BUMPER, Spring, Rear
	5118 759AA	2	3, 7	L	02, 06	EX8	DGZ		
		2	3, 7	L	12, 15, 16	EX8	DGZ		
11									PLATE, (NOT SERVICED) (Not Serviced)
12	5118 686AA	1	3, 7	L	12, 15, 16	EX8	DGZ		BRACKET, Spring, Left Front
13									CUSHION
	5104 068AA	4	3, 7	L	02, 06	EX8	DGZ		
		4	3, 7	L	12, 15, 16	EX8	DGZ		
14									NUT, Hex

Refer to Model Legend Information Bookmark

AR = Use as required - = Non illustrated part # = New this model year

March 3, 2006

« RETURN TO GROUP INDEX

»

Rear Springs, 3500 Series
Figure 017-130

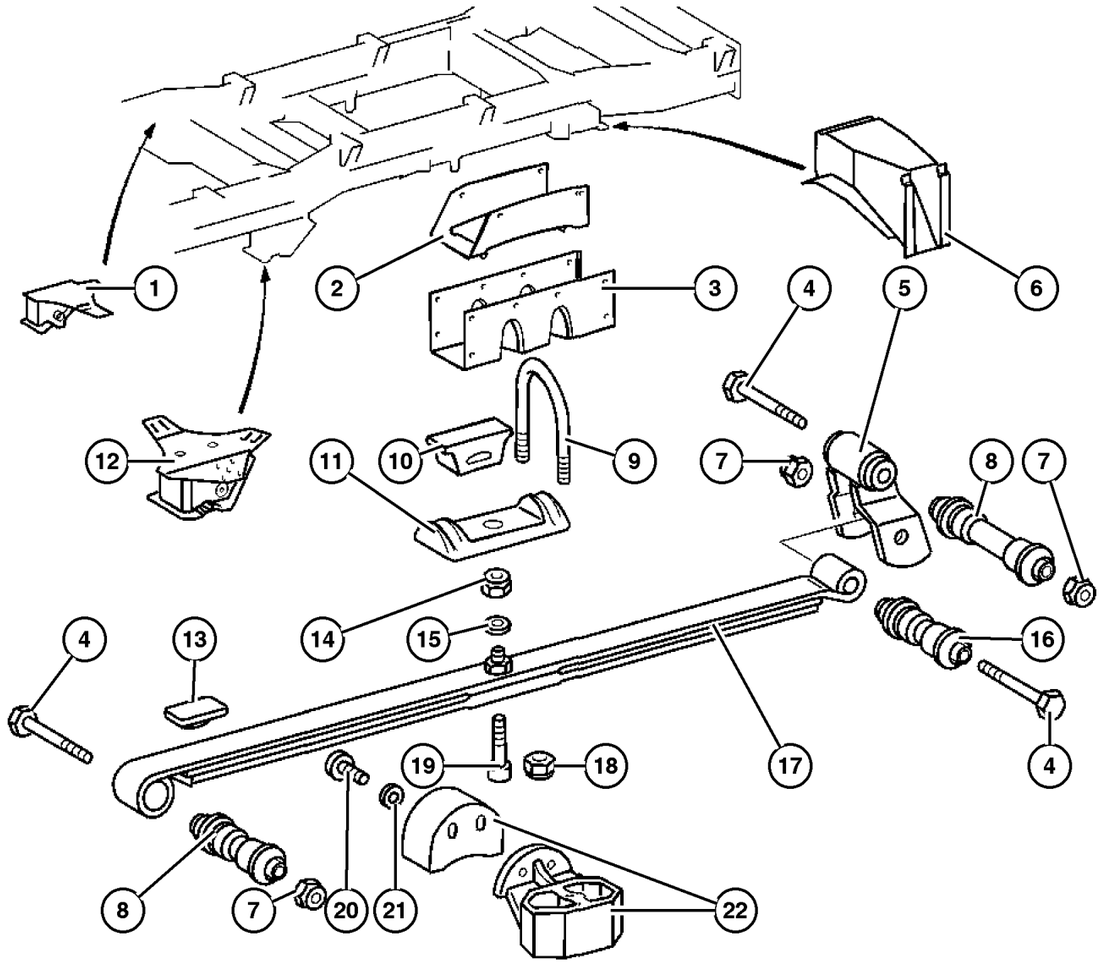

ITEM	PART NUMBER	QTY	LINE	SERIES	BODY	ENGINE	TRANS	TRIM	DESCRIPTION
	5133 872AA	2	3, 7	L	02, 06	EX8	DGZ		
		2	3, 7	L	12, 15, 16	EX8	DGZ		
15									WASHER, Spring
	5126 120AA	2	3, 7	L	02, 06	EX8	DGZ		
		2	3, 7	L	12, 15, 16	EX8	DGZ		
16									BUSHING, Spring
	5118 703AA	2	3, 7	L	02, 06	EX8	DGZ		Rear
		2	3, 7	L	12, 15, 16	EX8	DGZ		Rear
17									SPRING, Rear
	5118 621AA	2	3, 7	L	02, 06	EX8	DGZ		Right or Left
		2	3, 7	L	12, 15, 16	EX8	DGZ		Right or Left
18									NUT
	5103 727AA	8	3, 7	L	02, 06	EX8	DGZ		
		8	3, 7	L	12, 15, 16	EX8	DGZ		
19									BOLT
	5133 871AA	2	3, 7	L	02, 06	EX8	DGZ		
		2	3, 7	L	12, 15, 16	EX8	DGZ		
20	5097 678AA	4	3, 7	L	12, 15, 16				BOLT
21	5126 126AA	4	3, 7	L	12, 15, 16	EX8	DGZ		NUT
22									SHIM, (NOT SERVICED) (Not Serviced)

Refer to Model Legend Information Bookmark

AR = Use as required - = Non illustrated part # = New this model year

March 3, 2006

« RETURN TO GROUP INDEX

Stabilizer Bar,Rear
Figure 017-210

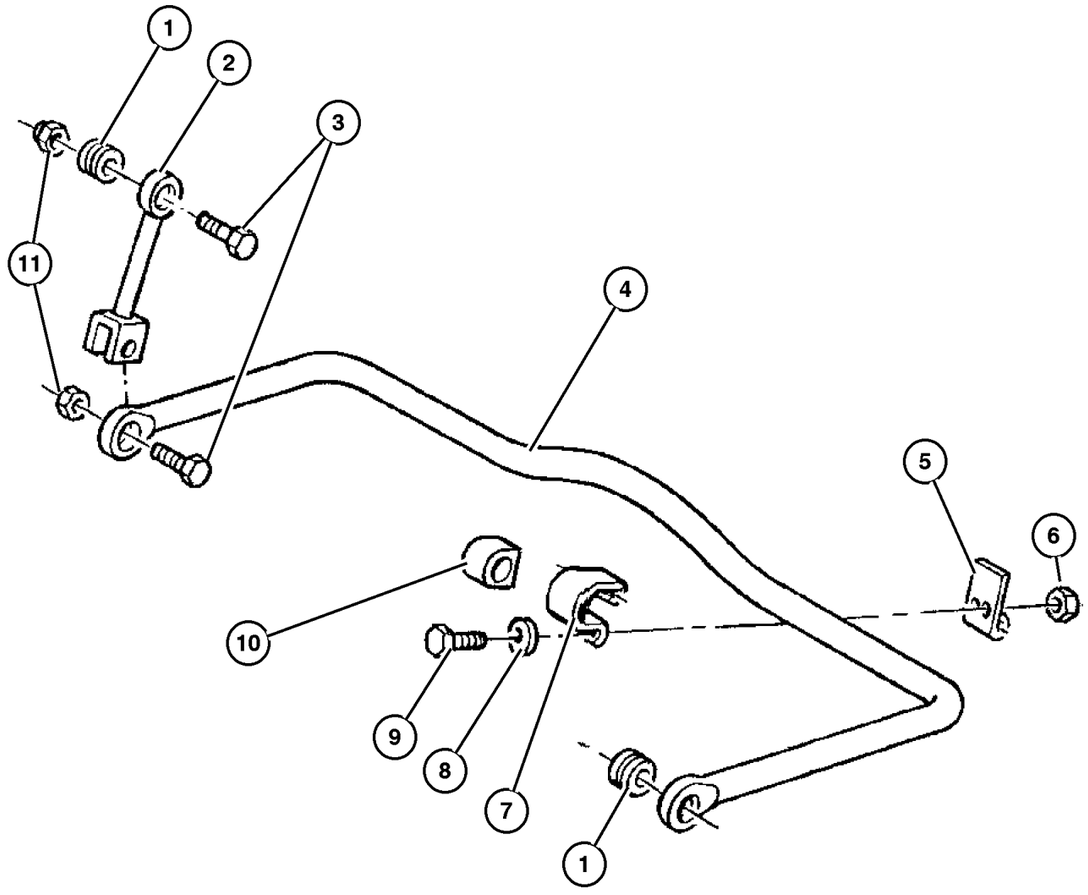

ITEM	PART NUMBER	QTY	LINE	SERIES	BODY	ENGINE	TRANS	TRIM	DESCRIPTION
1									BUSHING, Sway Bar
	5103 955AA	2	2, 6	L	01, 02, 06	EX8	DGZ		
		2	2, 6	L	11, 12, 14, 15, 16	EX8	DGZ		
		2	2, 6	L	51, 52, 54, 55, 56	EX8	DGZ		
		2	3, 7	L	02, 06	EX8	DGZ		
		2	3, 7	L	12, 15, 16	EX8	DGZ		
2									LINK, sway bar
	5104 058AA	2	2, 6	L	01, 02, 06	EX8	DGZ		Right or Left
		2	2, 6	L	11, 12, 14, 15, 16	EX8	DGZ		Right or Left
		2	2, 6	L	51, 52, 54, 55, 56	EX8	DGZ		Right or Left
	5118 696AA	2	3, 7	L	02, 06	EX8	DGZ		Right or Left
		2	3, 7	L	12, 15, 16	EX8	DGZ		Right or Left
3									BOLT
	6104 239AA	2	2, 6	L	01, 02, 06	EX8	DGZ		
		2	2, 6	L	11, 12, 14, 15, 16	EX8	DGZ		
		2	2, 6	L	51, 52, 54, 55, 56	EX8	DGZ		
		2	3, 7	L	02, 06	EX8	DGZ		
		2	3, 7	L	12, 15, 16	EX8	DGZ		
4									SWAY BAR
	5128 494AA	1	2, 6	L	01, 02, 06	EX8	DGZ		
		1	2, 6	L	11, 12, 14, 15, 16	EX8	DGZ		
		1	2, 6	L	51, 52, 54, 55, 56	EX8	DGZ		

Refer to Model Legend Information Bookmark

Stabilizer Bar,Rear
Figure 017-210

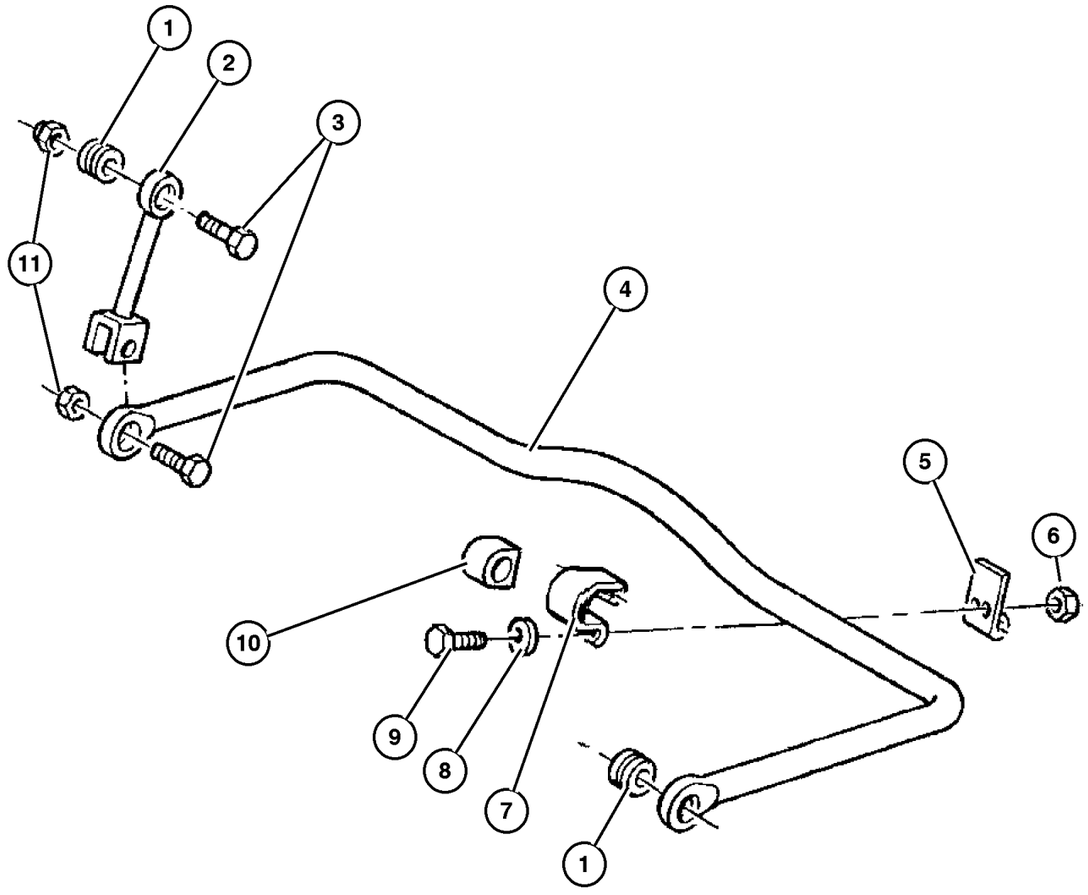

ITEM	PART NUMBER	QTY	LINE	SERIES	BODY	ENGINE	TRANS	TRIM	DESCRIPTION
	5118 632AA	1	3, 7	L	02, 06	EX8	DGZ		
		1	3, 7	L	12, 15, 16	EX8	DGZ		
5									BRACKET, Stabilizer Bar
	5128 598AA	2	2, 6	L	01, 02, 06	EX8	DGZ		
		2	2, 6	L	11, 12, 14, 15, 16	EX8	DGZ		
		2	2, 6	L	51, 52, 54, 55, 56	EX8	DGZ		
6									NUT
	6104 716AA	4	2, 6	L	01, 02, 06	EX8	DGZ		
		4	2, 6	L	11, 12, 14, 15, 16	EX8	DGZ		
		4	2, 6	L	51, 52, 54, 55, 56	EX8	DGZ		
		4	3, 7	L	02, 06	EX8	DGZ		
		4	3, 7	L	12, 15, 16	EX8	DGZ		
7									RETAINER, Sway Bar
	5132 783AA	2	2, 6	L	01, 02, 06	EX8	DGZ		
		2	2, 6	L	11, 12, 14, 15, 16	EX8	DGZ		
		2	2, 6	L	51, 52, 54, 55, 56	EX8	DGZ		
	5136 068AA	2	3, 7	L	02, 06	EX8	DGZ		
		2	3, 7	L	12, 15, 16	EX8	DGZ		
8	5104 615AA	4							WASHER
9	6104 031AA	2	2, 3, 6, 7	L		EX8	DGZ		SCREW
10									BUSHING, Sway Bar
	5104 073AA	2	2, 6	L	01, 02, 06	EX8	DGZ		
		2	2, 6	L	11, 12, 14, 15, 16	EX8	DGZ		

Refer to Model Legend Information Bookmark

AR = Use as required - = Non illustrated part # = New this model year

March 3, 2006

« RETURN TO GROUP INDEX

Stabilizer Bar,Rear
Figure 017-210

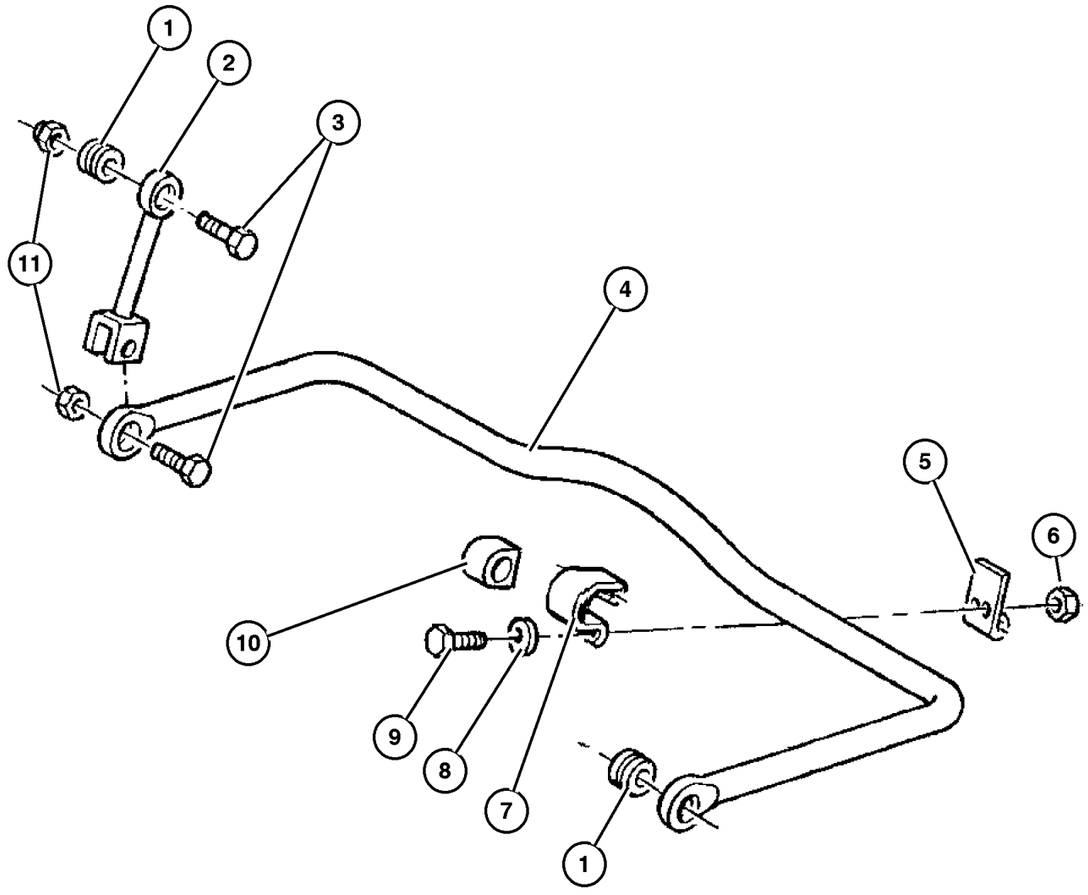

ITEM	PART NUMBER	QTY	LINE	SERIES	BODY	ENGINE	TRANS	TRIM	DESCRIPTION
		2	2, 6	L	51, 52, 54, 55, 56	EX8	DGZ		
	5118 800AA	2	3, 7	L	02, 06	EX8	DGZ		
		2	3, 7	L	12, 15, 16	EX8	DGZ		
11	6104 718AA	2	2, 6	L	01, 02, 06	EX8	DGZ		NUT
		2	2, 6	L	11, 12, 14, 15, 16	EX8	DGZ		
		2	2, 6	L	51, 52, 54, 55, 56	EX8	DGZ		
		2	3, 7	L	02, 06	EX8	DGZ		
		2	3, 7	L	12, 15, 16	EX8	DGZ		

Refer to Model Legend Information Bookmark

AR = Use as required - = Non illustrated part # = New this model year

March 3, 2006

Group – 019
Steering

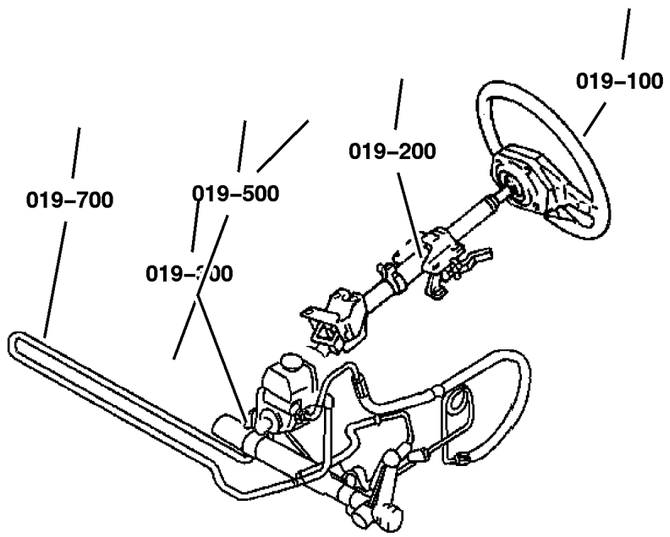

GROUP 19 - Steering

Illustration Title	Group-Fig. No.
Steering Wheel	
Steering Wheel and Related	Fig. 019-110
Steering Column	
Column Steering and Related	Fig. 019-210
Steering Gear	
Gear - Steering	Fig. 019-310
Power Steering Pump	
Pump and Pulley, Steering	Fig. 019-510
Power Steering Hoses	
Hoses Steering and Related	Fig. 019-710

019–100 Steering Wheel 	**019–200** Steering Column 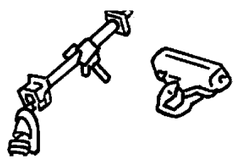	**019–300** Steering Gear 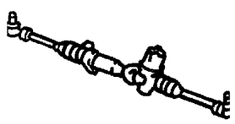	**019–500** Power Steering Pump 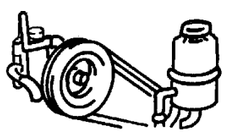
019–700 Power Steering Hoses 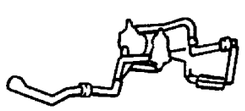			

Steering Wheel and Related
Figure 019-110

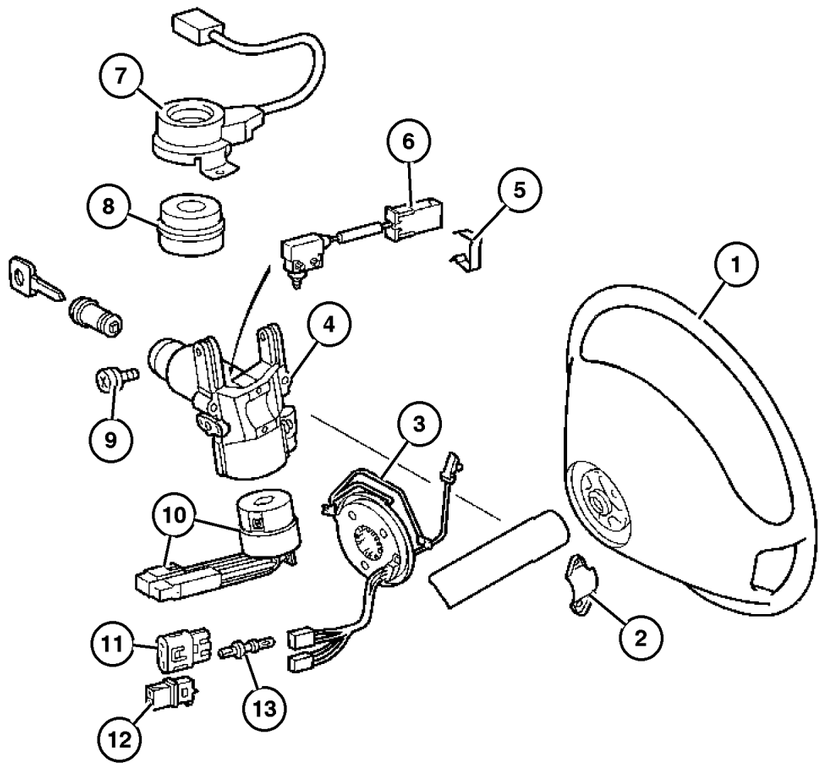

ITEM	PART NUMBER	QTY	LINE	SERIES	BODY	ENGINE	TRANS	TRIM	DESCRIPTION
Sale Code EX8=2.7L I5 MERCEDES-BENZ									
1									WHEEL, Steering
	ZF45 BD1AA	1	2, 6	L	01, 02, 06	EX8	DGZ		
		1	2, 6	L	11, 12, 14, 15, 16	EX8	DGZ		
		1	2, 6	L	51, 52, 54, 55, 56	EX8	DGZ		
		1	3, 7	L	02, 06	EX8	DGZ		
		1	3, 7	L	12, 15, 16	EX8	DGZ		
2									BRACKET, Steering Column
	5104 096AA	1	2, 6	L	01, 02, 06	EX8	DGZ		
		1	2, 6	L	11, 12, 14, 15, 16	EX8	DGZ		
		1	2, 6	L	51, 52, 54, 55, 56	EX8	DGZ		
		1	3, 7	L	02, 06	EX8	DGZ		
		1	3, 7	L	12, 15, 16	EX8	DGZ		
3									CLOCKSPRING
	5104 089AA	1	2, 6	L	01, 02, 06	EX8	DGZ		
		1	2, 6	L	11, 12, 14, 15, 16	EX8	DGZ		
		1	2, 6	L	51, 52, 54, 55, 56	EX8	DGZ		
		1	3, 7	L	02, 06	EX8	DGZ		
		1	3, 7	L	12, 15, 16	EX8	DGZ		
4									HOUSING, Steering Column Lock
	5104 092AA	1	2, 6	L	01, 02, 06	EX8	DGZ		
		1	2, 6	L	11, 12, 14, 15, 16	EX8	DGZ		

Refer to Model Legend Information Bookmark

AR = Use as required - = Non illustrated part # = New this model year

March 3, 2006

« RETURN TO GROUP INDEX

»

Steering Wheel and Related
Figure 019-110

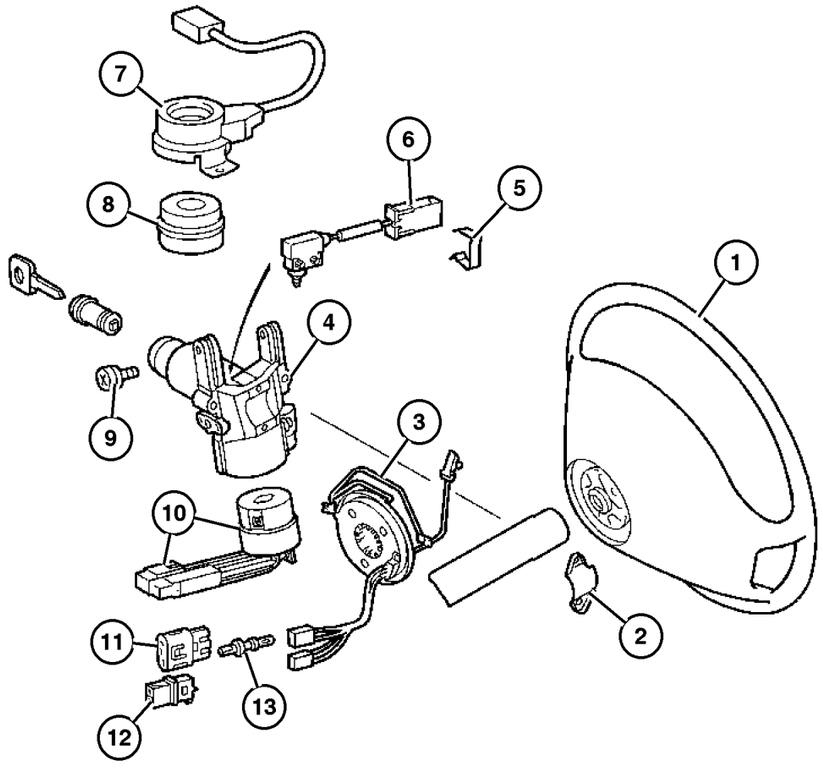

ITEM	PART NUMBER	QTY	LINE	SERIES	BODY	ENGINE	TRANS	TRIM	DESCRIPTION
		1	2, 6	L	51, 52, 54, 55, 56	EX8	DGZ		
		1	3, 7	L	02, 06	EX8	DGZ		
		1	3, 7	L	12, 15, 16	EX8	DGZ		
5									SPRING
	5103 660AA	1	2, 6	L	01, 02, 06	EX8	DGZ		
		1	2, 6	L	11, 12, 14, 15, 16	EX8	DGZ		
		1	2, 6	L	51, 52, 54, 55, 56	EX8	DGZ		
		1	3, 7	L	02, 06	EX8	DGZ		
		1	3, 7	L	12, 15, 16	EX8	DGZ		
6									SWITCH
	5103 678AA	1	2, 6	L	11, 12, 14, 15, 16	EX8	DGZ		
		1	2, 6	L	51, 52, 54, 55, 56	EX8	DGZ		
		1	3, 7	L	12, 15, 16	EX8	DGZ		
	5103 857AA	1	2, 6	L	01, 02, 06	EX8	DGZ		
		1	3, 7	L	02, 06	EX8	DGZ		
7									TRANSPONDER, Steering Wheel
	5120 812AA	1	2, 6	L	11, 12, 14, 15, 16	EX8	DGZ		
		1	2, 6	L	51, 52, 54, 55, 56	EX8	DGZ		
		1	2, 6	L	01, 02, 06	EX8	DGZ		
		1	3, 7	L	02, 06	EX8	DGZ		
		1	3, 7	L	12, 15, 16	EX8	DGZ		
8									RING

Refer to Model Legend Information Bookmark

AR = Use as required - = Non illustrated part # = New this model year

March 3, 2006

« RETURN TO GROUP INDEX

Steering Wheel and Related
Figure 019-110

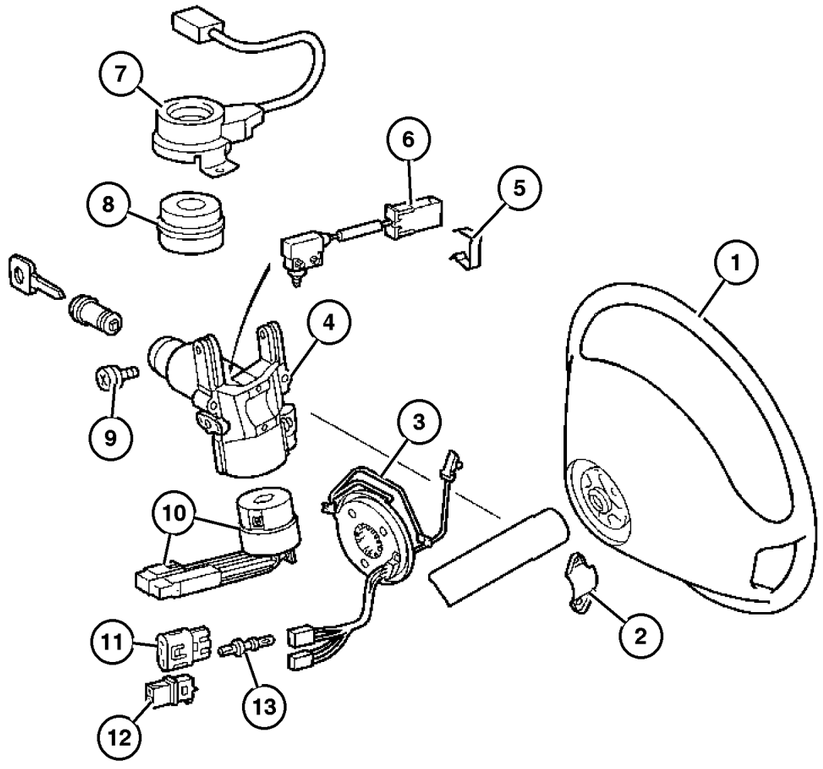

ITEM	PART NUMBER	QTY	LINE	SERIES	BODY	ENGINE	TRANS	TRIM	DESCRIPTION
	5104 593AA	1	2, 6	L	11, 12, 14, 15, 16	EX8	DGZ		
		1	2, 6	L	51, 52, 54, 55, 56	EX8	DGZ		
		1	2, 6	L	01, 02, 06	EX8	DGZ		
		1	3, 7	L	02, 06	EX8	DGZ		
		1	3, 7	L	12, 15, 16	EX8	DGZ		
9									SCREW
	5103 604AA	1	2, 6	L	01, 02, 06	EX8	DGZ		
		1	2, 6	L	11, 12, 14, 15, 16	EX8	DGZ		
		1	2, 6	L	51, 52, 54, 55, 56	EX8	DGZ		
		1	3, 7	L	02, 06	EX8	DGZ		
10									SWITCH, Ignition
	5103 664AA	1	2, 6	L	01, 02, 06	EX8	DGZ		
		1	2, 6	L	11, 12, 14, 15, 16	EX8	DGZ		
		1	2, 6	L	51, 52, 54, 55, 56	EX8	DGZ		
		1	3, 7	L	02, 06	EX8	DGZ		
		1	3, 7	L	12, 15, 16	EX8	DGZ		
11									CONNECTOR
	5103 904AA	1	2, 6	L	01, 02, 06	EX8	DGZ		
		1	2, 6	L	11, 12, 14, 15, 16	EX8	DGZ		
		1	2, 6	L	51, 52, 54, 55, 56	EX8	DGZ		
		1	3, 7	L	02, 06	EX8	DGZ		
		1	3, 7	L	12, 15, 16	EX8	DGZ		
12									CONNECTOR

Refer to Model Legend Information Bookmark

Steering Wheel and Related
Figure 019-110

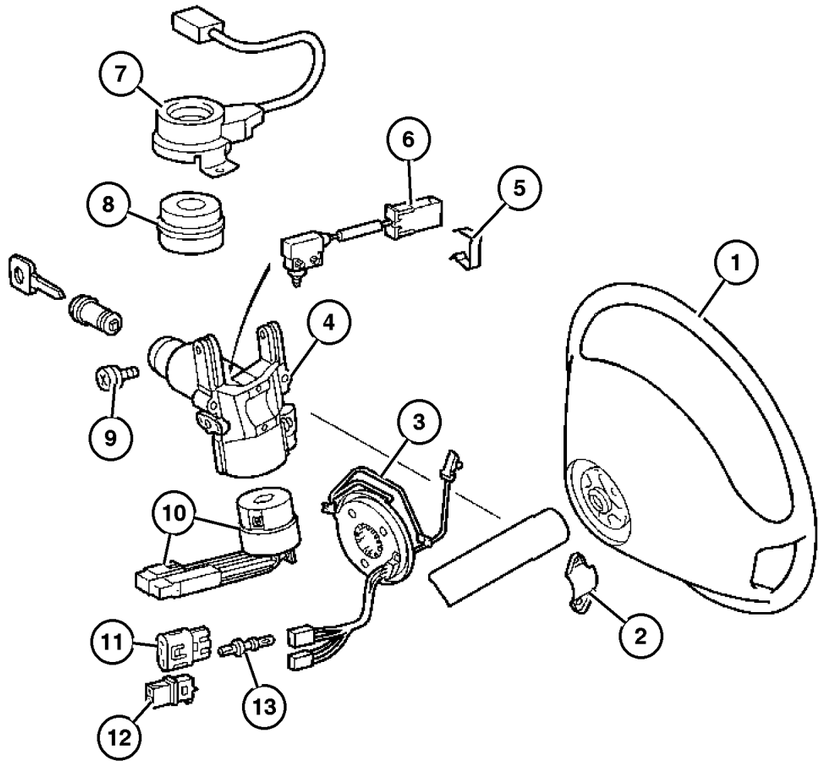

ITEM	PART NUMBER	QTY	LINE	SERIES	BODY	ENGINE	TRANS	TRIM	DESCRIPTION
	5103 902AA	1	2, 6	L	01, 02, 06	EX8	DGZ		
		1	2, 6	L	11, 12, 14, 15, 16	EX8	DGZ		
		1	2, 6	L	51, 52, 54, 55, 56	EX8	DGZ		
		1	3, 7	L	02, 06	EX8	DGZ		
		1	3, 7	L	12, 15, 16	EX8	DGZ		
13									TERMINAL
	5103 828AA	99	2, 6	L	01, 02, 06	EX8	DGZ		
		99	2, 6	L	11, 12, 14, 15, 16	EX8	DGZ		
		99	2, 6	L	51, 52, 54, 55, 56	EX8	DGZ		
		99	3, 7	L	02, 06	EX8	DGZ		
		99	3, 7	L	12, 15, 16	EX8	DGZ		
-14									CONTACT, Horn
	5119 542AA-	1	2, 6	L	01, 02, 06	EX8	DGZ		
		1	2, 6	L	11, 12, 14, 15, 16	EX8	DGZ		
		1	2, 6	L	51, 52, 54, 55, 56	EX8	DGZ		
		1	3, 7	L	02, 06	EX8	DGZ		
		1	3, 7	L	12, 15, 16	EX8	DGZ		

Refer to Model Legend Information Bookmark

Column Steering and Related
Figure 019-210

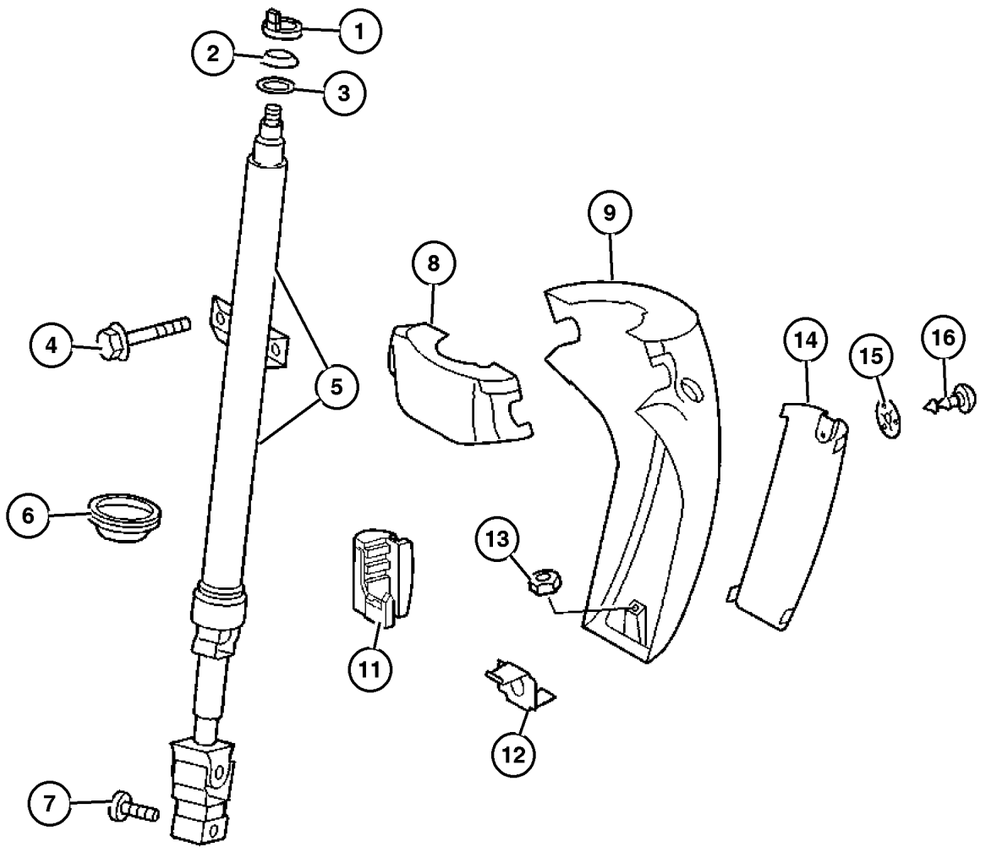

ITEM	PART NUMBER	QTY	LINE	SERIES	BODY	ENGINE	TRANS	TRIM	DESCRIPTION
Note; Sales Codes;									
[WCL] = 15 Inch Steel Wheels									
[WDG] = 16 Inch Steel Wheels									
1									RING
	5103 651AA	1	2, 6	L	01, 02, 06	EX8	DGZ		
		1	2, 6	L	11, 12, 14, 15, 16	EX8	DGZ		
		1	2, 6	L	51, 52, 54, 55, 56	EX8	DGZ		
		1	3, 7	L	02, 06	EX8	DGZ		
		1	3, 7	L	12, 15, 16	EX8	DGZ		
2									SPACER
	5127 709AA	1	2, 6	L	01, 02, 06	EX8	DGZ		
		1	2, 6	L	11, 12, 14, 15, 16	EX8	DGZ		
		1	2, 6	L	51, 52, 54, 55, 56	EX8	DGZ		
		1	3, 7	L	02, 06	EX8	DGZ		
		1	3, 7	L	12, 15, 16	EX8	DGZ		
3									WASHER, Thrust
	5127 708AA	1	2, 6	L	01, 02, 06	EX8	DGZ		
		1	2, 6	L	11, 12, 14, 15, 16	EX8	DGZ		
		1	2, 6	L	51, 52, 54, 55, 56	EX8	DGZ		
		1	3, 7	L	02, 06	EX8	DGZ		
		1	3, 7	L	12, 15, 16	EX8	DGZ		
4									BOLT, Hex Head
	5126 227AA	2	2, 6	L	01, 02, 06	EX8	DGZ		
		2	2, 6	L	11, 12, 14, 15, 16	EX8	DGZ		

Refer to Model Legend Information Bookmark

Column Steering and Related
Figure 019-210

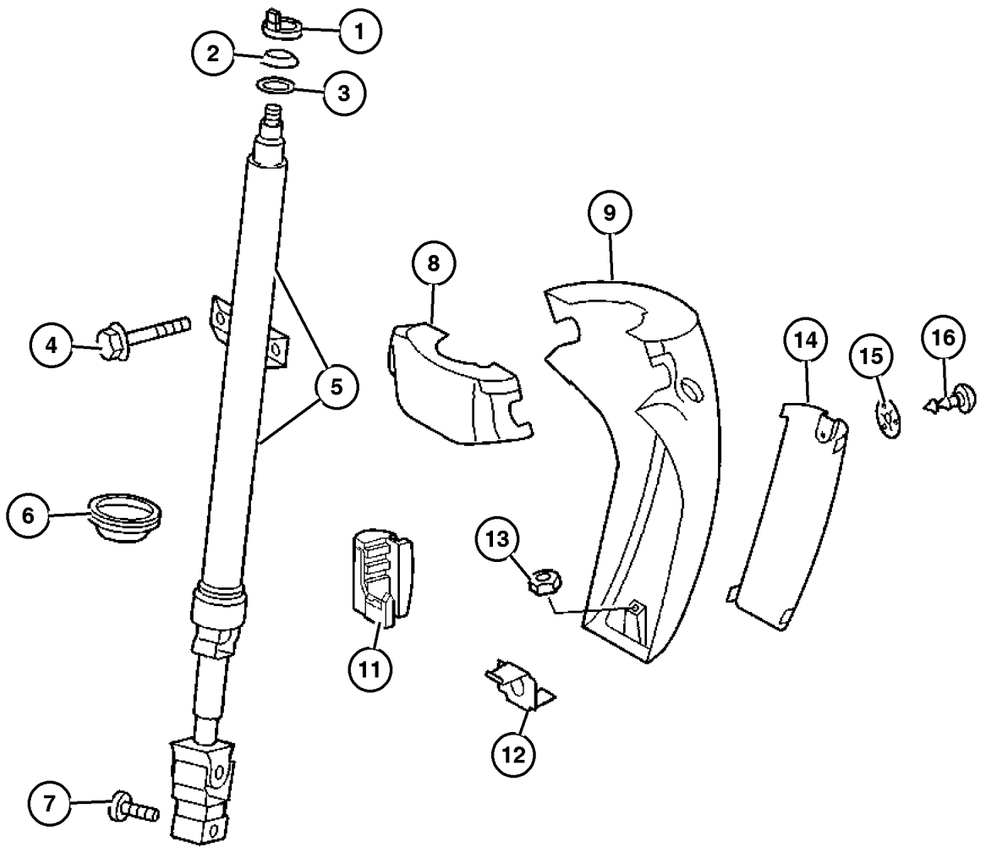

ITEM	PART NUMBER	QTY	LINE	SERIES	BODY	ENGINE	TRANS	TRIM	DESCRIPTION
		2	2, 6	L	51, 52, 54, 55, 56	EX8	DGZ		
		2	3, 7	L	02, 06	EX8	DGZ		
		2	3, 7	L	12, 15, 16	EX8	DGZ		
5									COLUMN, Steering
	5129 396AA	1	2, 6	L	01, 02, 06	EX8	DGZ		With [BNB]
		1	2, 6	L	11, 12, 14, 15, 16	EX8	DGZ		With [BNB]
		1	2, 6	L	51, 52, 54, 55, 56	EX8	DGZ		With [BNB]
	5129 404AA	1	2, 6	L	01, 02, 06	EX8	DGZ		With [BNB+WDG]
		1	2, 6	L	11, 12, 14, 15, 16	EX8	DGZ		With [BNB+WDG]
		1	2, 6	L	51, 52, 54, 55, 56	EX8	DGZ		With [BNB+WDG]
6									SEAL, Steering Gear
	5119 536AA	1	2, 6	L	01, 02, 06	EX8	DGZ		
		1	2, 6	L	11, 12, 14, 15, 16	EX8	DGZ		
		1	2, 6	L	51, 52, 54, 55, 56	EX8	DGZ		
		1	3, 7	L	02, 06	EX8	DGZ		
		1	3, 7	L	12, 15, 16	EX8	DGZ		
7									SCREW, Steering Column
	5125 707AA	1	2, 6	L	01, 02, 06	EX8	DGZ		
		1	2, 6	L	11, 12, 14, 15, 16	EX8	DGZ		
		1	2, 6	L	51, 52, 54, 55, 56	EX8	DGZ		
		1	3, 7	L	02, 06	EX8	DGZ		

Refer to Model Legend Information Bookmark

AR = Use as required - = Non illustrated part # = New this model year

March 3, 2006

« RETURN TO GROUP INDEX

Column Steering and Related
Figure 019-210

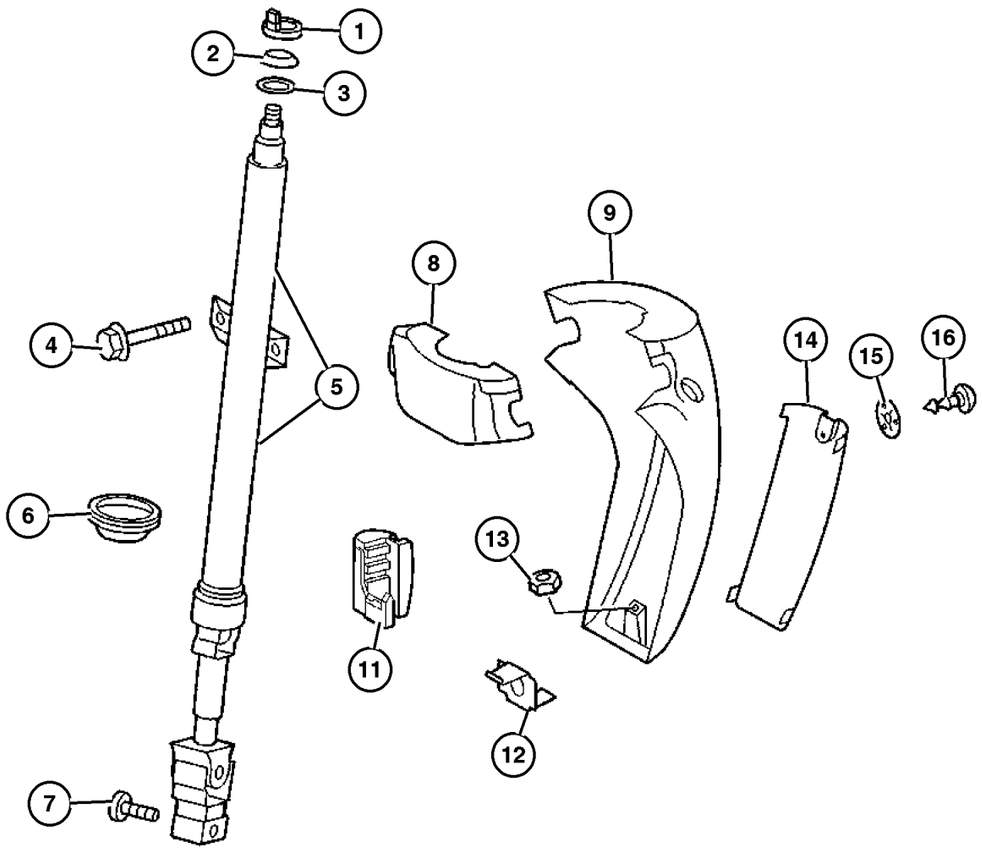

ITEM	PART NUMBER	QTY	LINE	SERIES	BODY	ENGINE	TRANS	TRIM	DESCRIPTION
		1	3, 7	L	12, 15, 16	EX8	DGZ		
8	5119 534AA	1	2, 6	L	01, 02, 06	EX8	DGZ		SHROUD, Steering Column, Upper
		1	2, 6	L	11, 12, 14, 15, 16	EX8	DGZ		
		1	2, 6	L	51, 52, 54, 55, 56	EX8	DGZ		
		1	3, 7	L	02, 06	EX8	DGZ		
		1	3, 7	L	12, 15, 16	EX8	DGZ		
9	5119 524AA	1	2, 6	L	01, 02, 06	EX8	DGZ		SHROUD, Steering Column, Lower
		1	2, 6	L	11, 12, 14, 15, 16	EX8	DGZ		
		1	2, 6	L	51, 52, 54, 55, 56	EX8	DGZ		
		1	3, 7	L	02, 06	EX8	DGZ		
		1	3, 7	L	12, 15, 16	EX8	DGZ		
-10	5126 274AA-	2	2, 6	L	01, 02, 06	EX8	DGZ		SCREW, Steering Column
		2	2, 6	L	11, 12, 14, 15, 16	EX8	DGZ		
		2	2, 6	L	51, 52, 54, 55, 56	EX8	DGZ		
		2	3, 7	L	02, 06	EX8	DGZ		
		2	3, 7	L	12, 15, 16	EX8	DGZ		
11	5122 935AA	1	2, 6	L	01, 02, 06	EX8	DGZ		GROMMET, Steering Column Cover
		1	2, 6	L	11, 12, 14, 15, 16	EX8	DGZ		

Refer to Model Legend Information Bookmark

Column Steering and Related
Figure 019-210

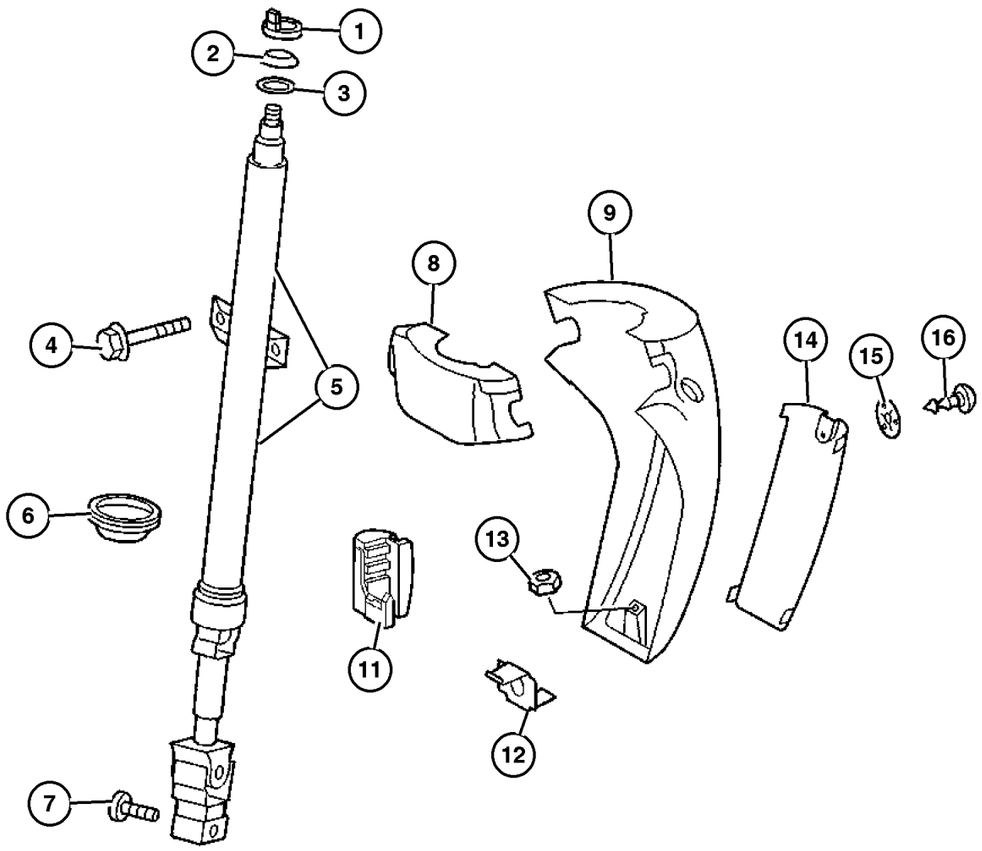

ITEM	PART NUMBER	QTY	LINE	SERIES	BODY	ENGINE	TRANS	TRIM	DESCRIPTION
		1	2, 6	L	51, 52, 54, 55, 56	EX8	DGZ		
		1	3, 7	L	02, 06	EX8	DGZ		
		1	3, 7	L	12, 15, 16	EX8	DGZ		
12	5125 568AA	1	2, 6	L	01, 02, 06	EX8	DGZ		CLIP, Steering Column
		1	2, 6	L	11, 12, 14, 15, 16	EX8	DGZ		
		1	2, 6	L	51, 52, 54, 55, 56	EX8	DGZ		
		1	3, 7	L	02, 06	EX8	DGZ		
		1	3, 7	L	12, 15, 16	EX8	DGZ		
13	5127 449AA	2	2, 6	L	01, 02, 06	EX8	DGZ		NUT, M6x1.00
		2	2, 6	L	11, 12, 14, 15, 16	EX8	DGZ		
		2	2, 6	L	51, 52, 54, 55, 56	EX8	DGZ		
		2	3, 7	L	02, 06	EX8	DGZ		
		2	3, 7	L	12, 15, 16	EX8	DGZ		
14	5119 525AA	1	2, 6	L	01, 02, 06	EX8	DGZ		COVER, Steering Column Opening
		1	2, 6	L	11, 12, 14, 15, 16	EX8	DGZ		
		1	2, 6	L	51, 52, 54, 55, 56	EX8	DGZ		
		1	3, 7	L	02, 06	EX8	DGZ		
		1	3, 7	L	12, 15, 16	EX8	DGZ		
15	5125 751AA	1	2, 6	L	01, 02, 06	EX8	DGZ		WASHER, Steering Column

Refer to Model Legend Information Bookmark

AR = Use as required - = Non illustrated part # = New this model year

March 3, 2006

« RETURN TO GROUP INDEX

« »

Column Steering and Related
Figure 019-210

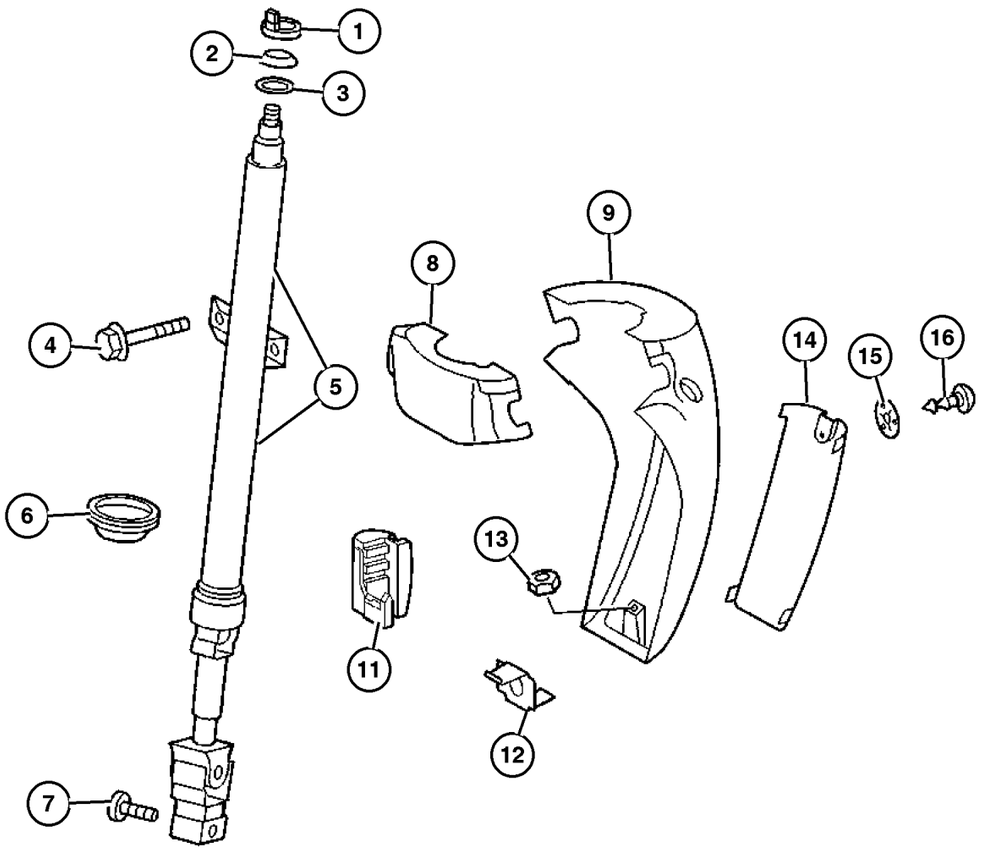

ITEM	PART NUMBER	QTY	LINE	SERIES	BODY	ENGINE	TRANS	TRIM	DESCRIPTION
		1	2, 6	L	11, 12, 14, 15, 16	EX8	DGZ		
		1	2, 6	L	51, 52, 54, 55, 56	EX8	DGZ		
		1	3, 7	L	02, 06	EX8	DGZ		
		1	3, 7	L	12, 15, 16	EX8	DGZ		
16									SCREW, Steering Column
	5125 557AA	1	2, 6	L	01, 02, 06	EX8	DGZ		
		1	2, 6	L	11, 12, 14, 15, 16	EX8	DGZ		
		1	2, 6	L	51, 52, 54, 55, 56	EX8	DGZ		
		1	3, 7	L	02, 06	EX8	DGZ		
		1	3, 7	L	12, 15, 16	EX8	DGZ		

Refer to Model Legend Information Bookmark

AR = Use as required - = Non illustrated part # = New this model year

March 3, 2006

« RETURN TO GROUP INDEX

«

Gear - Steering
Figure 019-310

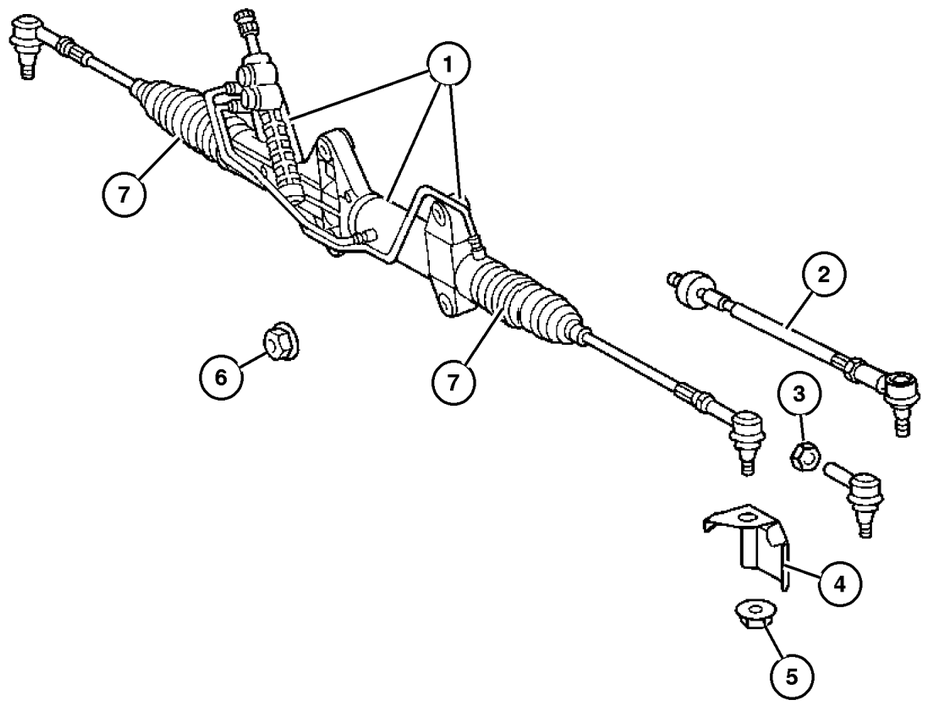

ITEM	PART NUMBER	QTY	LINE	SERIES	BODY	ENGINE	TRANS	TRIM	DESCRIPTION
Note; Sales Codes;									
[WCL] = 15 inch Steel Wheels									
[WDG] = 16 Inch Steel Wheels									
1									GEAR, Power Steering
	5104 094AA	1	2, 6	L	01, 02, 06	EX8	DGZ		15 Wheels
		1	2, 6	L	11, 12, 14, 15, 16	EX8	DGZ		15 Wheels
		1	2, 6	L	51, 52, 54, 55, 56	EX8	DGZ		15 Wheels
	5104 585AA	1	2, 6	L	01, 02, 06	EX8	DGZ		16 Wheels
		1	2, 6	L	11, 12, 14, 15, 16	EX8	DGZ		16 Wheels
		1	2, 6	L	51, 52, 54, 55, 56	EX8	DGZ		16 Wheels
		1	3, 7	L	02, 06	EX8	DGZ		16 Wheels
		1	3, 7	L	12, 15, 16	EX8	DGZ		16 Wheels
2									END, Tie Rod
	5104 091AA	2	2, 6	L	01, 02, 06	EX8	DGZ		
		2	2, 6	L	11, 12, 14, 15, 16	EX8	DGZ		
		2	2, 6	L	51, 52, 54, 55, 56	EX8	DGZ		
		2	3, 7	L	02, 06	EX8	DGZ		
		2	3, 7	L	12, 15, 16	EX8	DGZ		
3									JAM NUT, Outer Tie Rod
	5133 906AA	2	2, 6	L	01, 02, 06	EX8	DGZ		
		2	2, 6	L	11, 12, 14, 15, 16	EX8	DGZ		
		2	2, 6	L	51, 52, 54, 55, 56	EX8	DGZ		
		2	3, 7	L	02, 06	EX8	DGZ		

Refer to Model Legend Information Bookmark

Gear - Steering
Figure 019-310

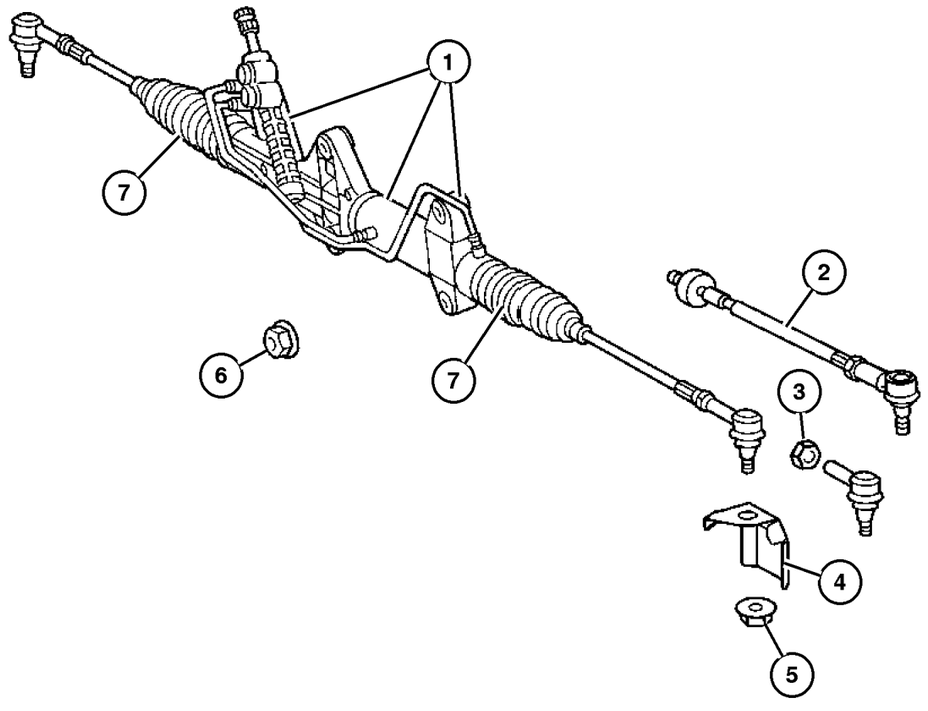

ITEM	PART NUMBER	QTY	LINE	SERIES	BODY	ENGINE	TRANS	TRIM	DESCRIPTION
		2	3, 7	L	12, 15, 16	EX8	DGZ		
4	5119 249AA	2	2, 6	L	01, 02, 06	EX8	DGZ		PLATE, Backing
		2	2, 6	L	11, 12, 14, 15, 16	EX8	DGZ		
		2	2, 6	L	51, 52, 54, 55, 56	EX8	DGZ		
		2	3, 7	L	02, 06	EX8	DGZ		
		2	3, 7	L	12, 15, 16	EX8	DGZ		
5	5125 761AA	2	2, 6	L	01, 02, 06	EX8	DGZ		NUT
		2	2, 6	L	11, 12, 14, 15, 16	EX8	DGZ		
		2	2, 6	L	51, 52, 54, 55, 56	EX8	DGZ		
		2	3, 7	L	02, 06	EX8	DGZ		
		2	3, 7	L	12, 15, 16	EX8	DGZ		
6	6104 717AA	2	2, 6	L	01, 02, 06	EX8	DGZ		NUT
		4	2, 6	L	11, 12, 14, 15, 16	EX8	DGZ		
		4	2, 6	L	51, 52, 54, 55, 56	EX8	DGZ		
		4	3, 7	L	02, 06	EX8	DGZ		
		4	3, 7	L	12, 15, 16	EX8	DGZ		
7	5133 904AA	2	2, 6	L	01, 02, 06	EX8	DGZ		BOOT, Steering Gear
		2	2, 6	L	11, 12, 14, 15, 16	EX8	DGZ		

Refer to Model Legend Information Bookmark

AR = Use as required - = Non illustrated part # = New this model year

March 3, 2006

« RETURN TO GROUP INDEX

« »

Gear - Steering
Figure 019-310

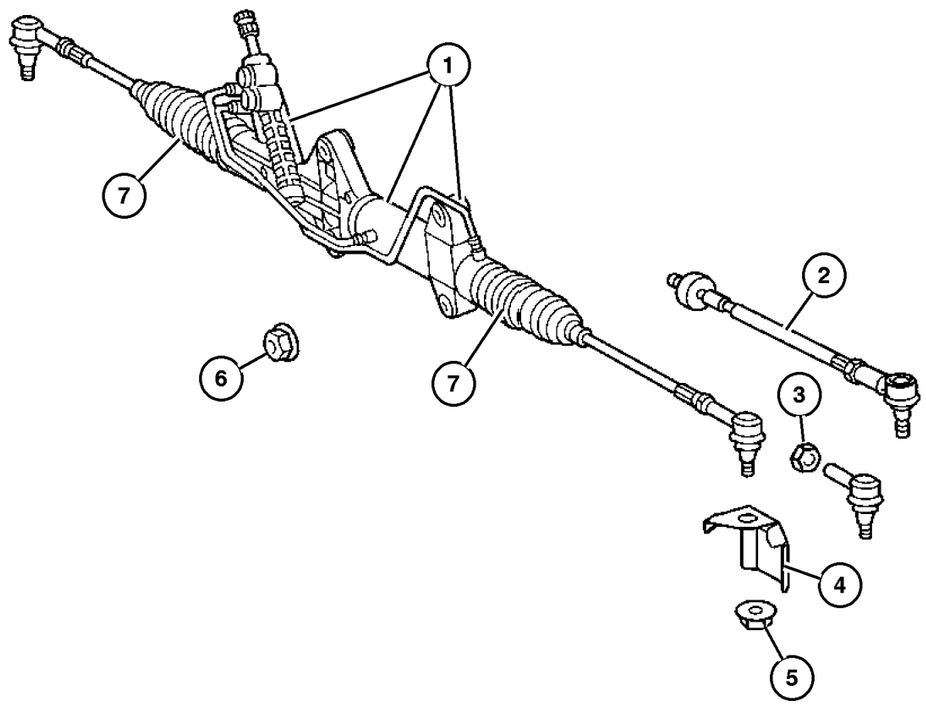

ITEM	PART NUMBER	QTY	LINE	SERIES	BODY	ENGINE	TRANS	TRIM	DESCRIPTION
		2	2, 6	L	51, 52, 54, 55, 56	EX8	DGZ		

Refer to Model Legend Information Bookmark

Pump and Pulley, Steering
Figure 019-510

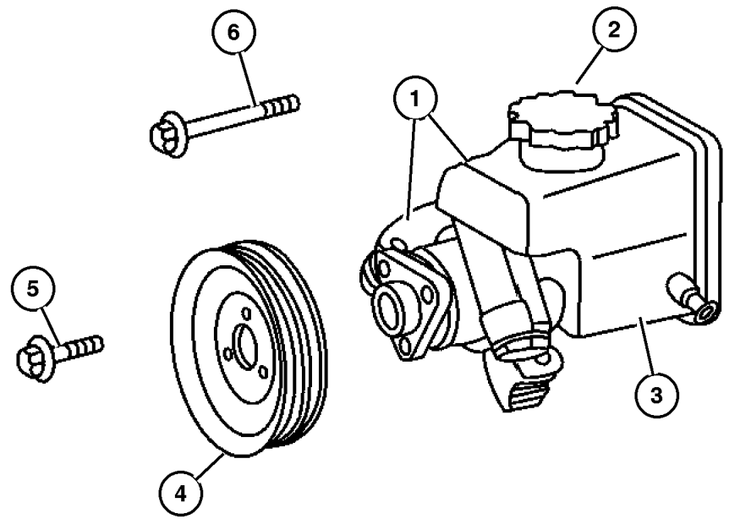

ITEM	PART NUMBER	QTY	LINE	SERIES	BODY	ENGINE	TRANS	TRIM	DESCRIPTION
Note; Sales Codes;									
[EX8] = 2.7L I5 MERCEDES-BENZ									
1									PUMP, Power Steering
	5103 795AA	1	2, 6	L	01, 02, 06	EX8	DGZ		
		1	2, 6	L	11, 12, 14, 15, 16	EX8	DGZ		
		1	2, 6	L	51, 52, 54, 55, 56	EX8	DGZ		
		1	3, 7	L	02, 06	EX8	DGZ		
		1	3, 7	L	12, 15, 16	EX8	DGZ		
2	5139 279AA	1							CAP, Power Steering Reservoir
3									RESERVOIR, Power Steering Pump, Service with power steering pump, (NOT SERVICED) (Not Serviced)
4									PULLEY, Power Steering Pump
	5117 692AA	1	2, 6	L	01, 02, 06	EX8	DGZ		
		1	2, 6	L	11, 12, 14, 15, 16	EX8	DGZ		
		1	2, 6	L	51, 52, 54, 55, 56	EX8	DGZ		
		1	3, 7	L	02, 06	EX8	DGZ		
		1	3, 7	L	12, 15, 16	EX8	DGZ		
5									SCREW
	6507 218AA	3	2, 6	L	01, 02, 06	EX8	DGZ		Pulley mounting
		3	2, 6	L	11, 12, 14, 15, 16	EX8	DGZ		Pulley mounting
		3	2, 6	L	51, 52, 54, 55, 56	EX8	DGZ		Pulley mounting
		3	3, 7	L	02, 06	EX8	DGZ		Pulley mounting
		3	3, 7	L	12, 15, 16	EX8	DGZ		Pulley mounting
6									BOLT, Hex Head
	5133 207AA	1	2, 6	L	01, 02, 06	EX8	DGZ		Pump Mounting

Refer to Model Legend Information Bookmark

AR = Use as required - = Non illustrated part # = New this model year

March 3, 2006

« RETURN TO GROUP INDEX

»

Pump and Pulley, Steering
Figure 019-510

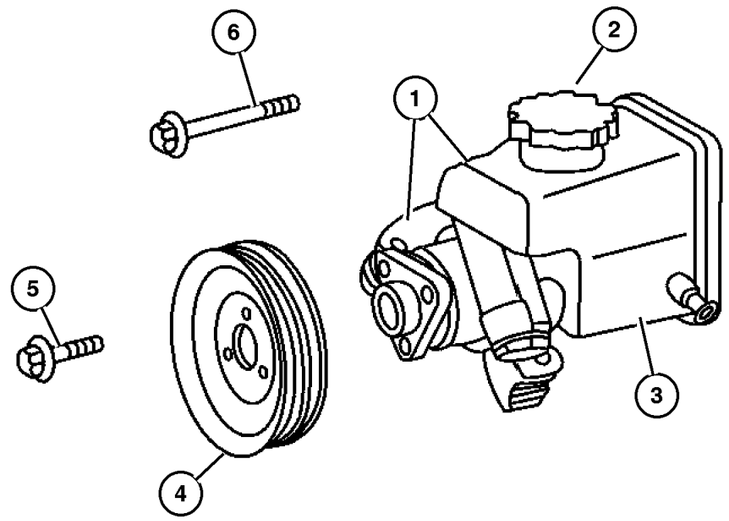

ITEM	PART NUMBER	QTY	LINE	SERIES	BODY	ENGINE	TRANS	TRIM	DESCRIPTION
		1	2, 6	L	11, 12, 14, 15, 16	EX8	DGZ		Pump Mounting
		1	2, 6	L	51, 52, 54, 55, 56	EX8	DGZ		Pump Mounting
		1	3, 7	L	02, 06	EX8	DGZ		Pump Mounting
		1	3, 7	L	12, 15, 16	EX8	DGZ		Pump Mounting

Refer to Model Legend Information Bookmark

AR = Use as required - = Non illustrated part # = New this model year

March 3, 2006

« RETURN TO GROUP INDEX

«

Hoses Steering and Related
Figure 019-710

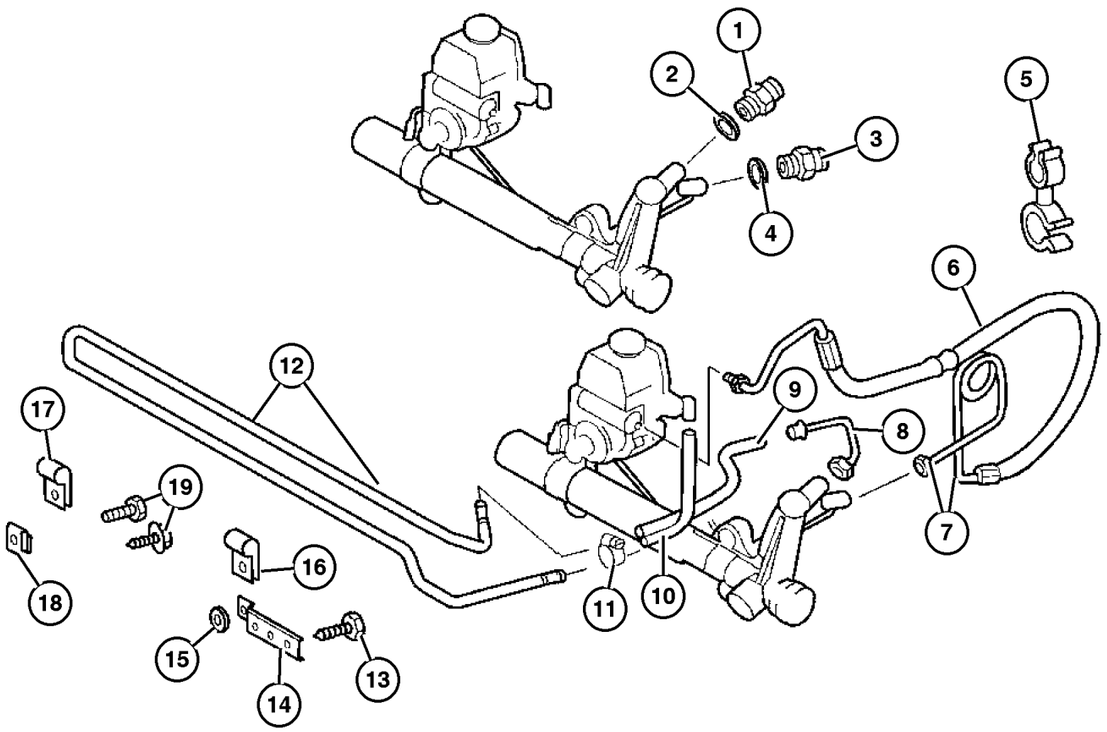

ITEM	PART NUMBER	QTY	LINE	SERIES	BODY	ENGINE	TRANS	TRIM	DESCRIPTION
Note; Sales Codes;									
[EX8] = 2.7L I5 MERCEDES-BENZ									
1									FITTING, Power Steering Pump
	5104 540AA	1	2, 6	L	01, 02, 06	EX8	DGZ		
		1	2, 6	L	11, 12, 14, 15, 16	EX8	DGZ		
		1	2, 6	L	51, 52, 54, 55, 56	EX8	DGZ		
		1	3, 7	L	02, 06	EX8	DGZ		
		1	3, 7	L	12, 15, 16	EX8	DGZ		
2									SEAL
	5102 646AA	1	2, 6	L	01, 02, 06	EX8	DGZ		
		1	2, 6	L	11, 12, 14, 15, 16	EX8	DGZ		
		1	2, 6	L	51, 52, 54, 55, 56	EX8	DGZ		
		1	3, 7	L	02, 06	EX8	DGZ		
		1	3, 7	L	12, 15, 16	EX8	DGZ		
3									FITTING, Power Steering Pump
	5104 025AA	1	2, 6	L	01, 02, 06	EX8	DGZ		
		1	2, 6	L	11, 12, 14, 15, 16	EX8	DGZ		
		1	2, 6	L	51, 52, 54, 55, 56	EX8	DGZ		
		1	3, 7	L	02, 06	EX8	DGZ		
		1	3, 7	L	12, 15, 16	EX8	DGZ		
4									SEAL
	5102 646AA	1	2, 6	L	01, 02, 06	EX8	DGZ		
		1	2, 6	L	11, 12, 14, 15, 16	EX8	DGZ		

Refer to Model Legend Information Bookmark

AR = Use as required - = Non illustrated part # = New this model year

March 3, 2006

« RETURN TO GROUP INDEX

»

Hoses Steering and Related
Figure 019-710

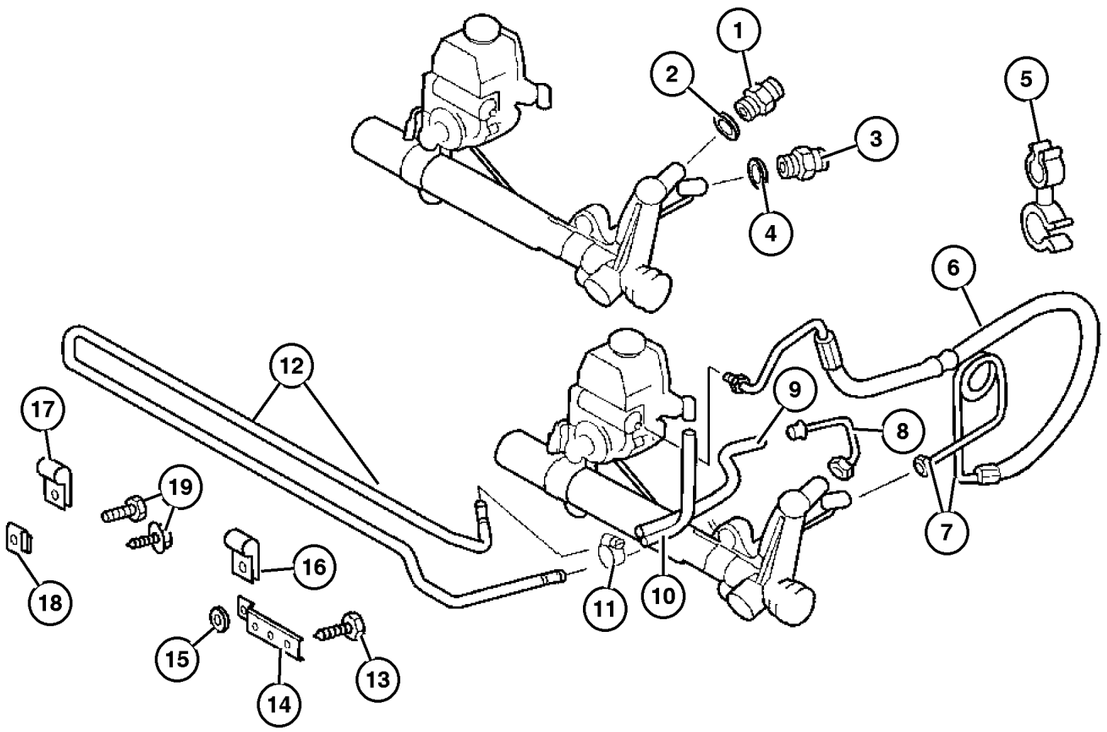

ITEM	PART NUMBER	QTY	LINE	SERIES	BODY	ENGINE	TRANS	TRIM	DESCRIPTION
		1	2, 6	L	51, 52, 54, 55, 56	EX8	DGZ		
		1	3, 7	L	02, 06	EX8	DGZ		
		1	3, 7	L	12, 15, 16	EX8	DGZ		
5	5125 887AA	1	2, 6	L	01, 02, 06	EX8	DGZ		CLAMP, Brake Hose
		1	2, 6	L	11, 12, 14, 15, 16	EX8	DGZ		
		1	2, 6	L	51, 52, 54, 55, 56	EX8	DGZ		
		1	3, 7	L	02, 06	EX8	DGZ		
		1	3, 7	L	12, 15, 16	EX8	DGZ		
6	5119 564AA	1	2, 6	L	01, 02, 06	EX8	DGZ		HOSE, Power Steering Pressure
		1	2, 6	L	11, 12, 14, 15, 16	EX8	DGZ		
		1	2, 6	L	51, 52, 54, 55, 56	EX8	DGZ		
		1	3, 7	L	02, 06	EX8	DGZ		
		1	3, 7	L	12, 15, 16	EX8	DGZ		
7	5119 563AA	1	2, 6	L	01, 02, 06	EX8	DGZ		HOSE, Power Steering Return
		1	2, 6	L	11, 12, 14, 15, 16	EX8	DGZ		
		1	2, 6	L	51, 52, 54, 55, 56	EX8	DGZ		
		1	3, 7	L	02, 06	EX8	DGZ		
		1	3, 7	L	12, 15, 16	EX8	DGZ		
8	5104 093AA	1	2, 6	L	01, 02, 06	EX8	DGZ		LINE, Power Steering Return

Refer to Model Legend Information Bookmark

AR = Use as required - = Non illustrated part # = New this model year

March 3, 2006

« RETURN TO GROUP INDEX

Hoses Steering and Related
Figure 019-710

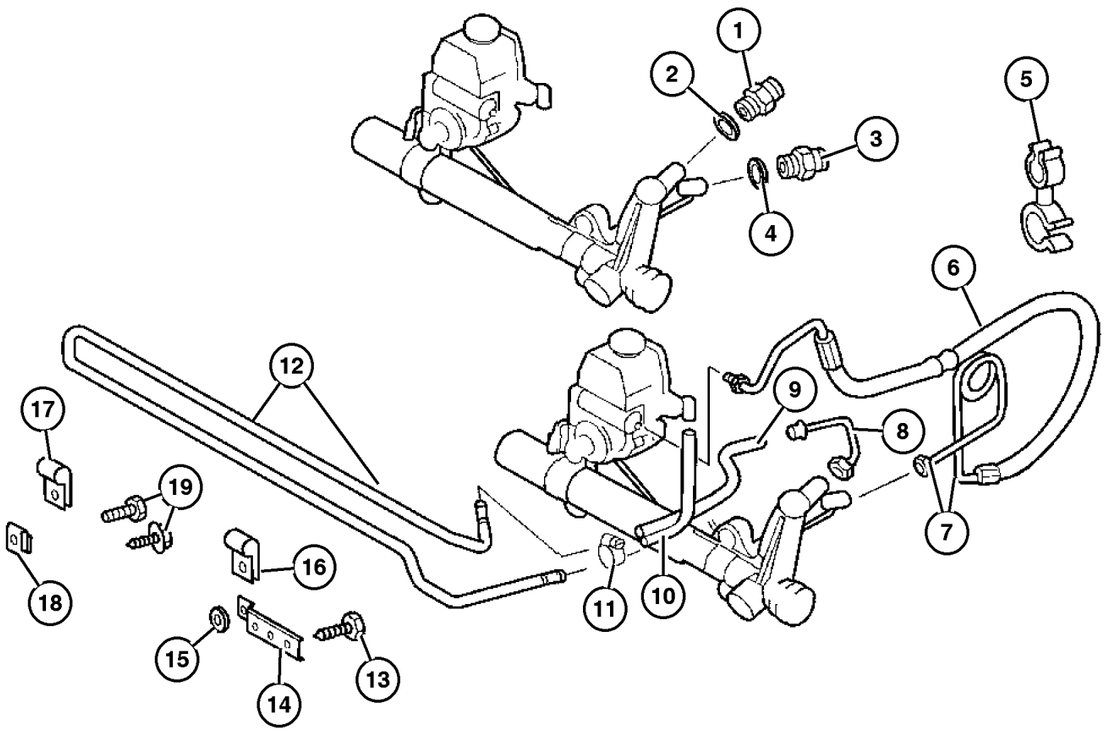

ITEM	PART NUMBER	QTY	LINE	SERIES	BODY	ENGINE	TRANS	TRIM	DESCRIPTION
		1	2, 6	L	11, 12, 14, 15, 16	EX8	DGZ		
		1	2, 6	L	51, 52, 54, 55, 56	EX8	DGZ		
		1	3, 7	L	02, 06	EX8	DGZ		
		1	3, 7	L	12, 15, 16	EX8	DGZ		
9									HOSE
	5133 784AA	100	2, 6	L	01, 02, 06	EX8	DGZ		
		100	2, 6	L	11, 12, 14, 15, 16	EX8	DGZ		
		100	2, 6	L	51, 52, 54, 55, 56	EX8	DGZ		
		100	3, 7	L	02, 06	EX8	DGZ		
		100	3, 7	L	12, 15, 16	EX8	DGZ		
10									HOSE, Power Steering Return
	5119 563AA	1	2, 6	L	01, 02, 06	EX8	DGZ		
		1	2, 6	L	11, 12, 14, 15, 16	EX8	DGZ		
		1	2, 6	L	51, 52, 54, 55, 56	EX8	DGZ		
		1	3, 7	L	02, 06	EX8	DGZ		
		1	3, 7	L	12, 15, 16	EX8	DGZ		
11									CLAMP, Brake Hose
	5096 431AA	2	2, 6	L	01, 02, 06	EX8	DGZ		
		2	2, 6	L	11, 12, 14, 15, 16	EX8	DGZ		
		2	2, 6	L	51, 52, 54, 55, 56	EX8	DGZ		
		2	3, 7	L	02, 06	EX8	DGZ		
		2	3, 7	L	12, 15, 16	EX8	DGZ		
12									TUBE

Refer to Model Legend Information Bookmark

AR = Use as required - = Non illustrated part # = New this model year

March 3, 2006

« RETURN TO GROUP INDEX

Hoses Steering and Related
Figure 019-710

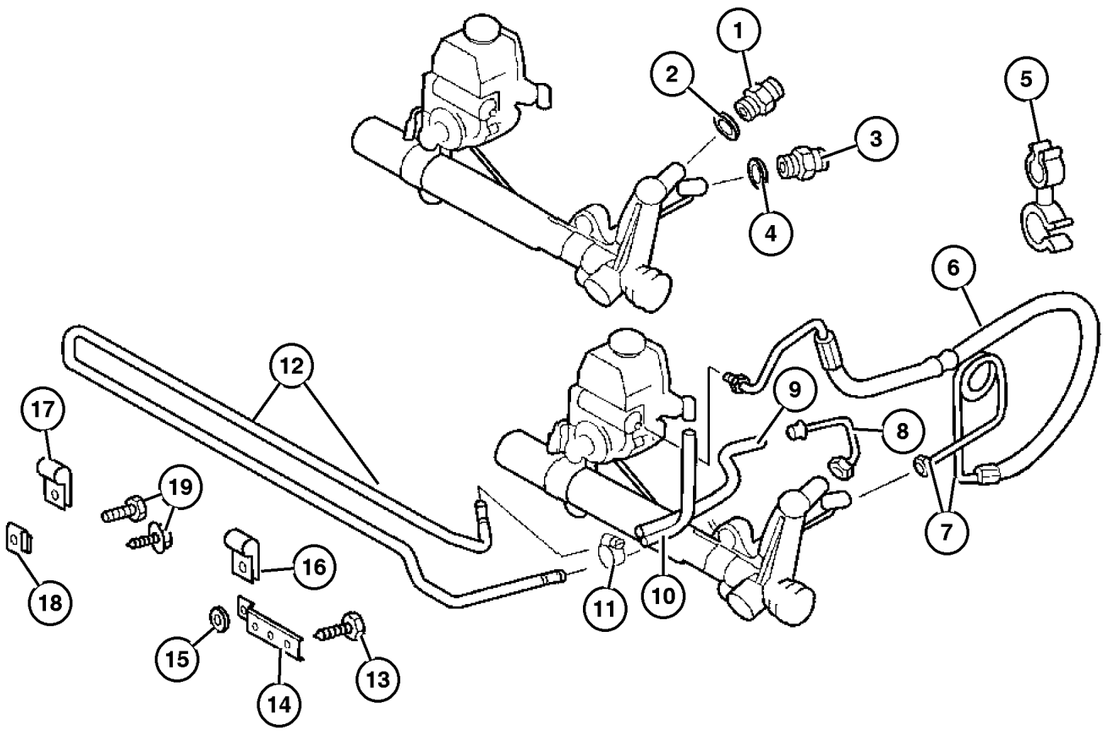

ITEM	PART NUMBER	QTY	LINE	SERIES	BODY	ENGINE	TRANS	TRIM	DESCRIPTION
	5104 098AA	1	2, 6	L	01, 02, 06	EX8	DGZ		
		1	2, 6	L	11, 12, 14, 15, 16	EX8	DGZ		
		1	2, 6	L	51, 52, 54, 55, 56	EX8	DGZ		
		1	3, 7	L	02, 06	EX8	DGZ		
		1	3, 7	L	12, 15, 16	EX8	DGZ		
13									SCREW, Tapping
	6104 574AA	3	2, 6	L	01, 02, 06	EX8	DGZ		
		3	2, 6	L	11, 12, 14, 15, 16	EX8	DGZ		
		3	2, 6	L	51, 52, 54, 55, 56	EX8	DGZ		
		3	3, 7	L	02, 06	EX8	DGZ		
		3	3, 7	L	12, 15, 16	EX8	DGZ		
14									BRACKET, Mounting
	5119 556AA	2	2, 6	L	01, 02, 06	EX8	DGZ		
		2	2, 6	L	11, 12, 14, 15, 16	EX8	DGZ		
		2	2, 6	L	51, 52, 54, 55, 56	EX8	DGZ		
		2	3, 7	L	02, 06	EX8	DGZ		
		2	3, 7	L	12, 15, 16	EX8	DGZ		
15									WASHER
	5104 639AA	99	2, 6	L	11, 12, 14, 15, 16	EX8	DGZ		
		99	2, 6	L	51, 52, 54, 55, 56	EX8	DGZ		
		16	3, 7	L	12, 15, 16	EX8	DGZ		
16									CLAMP

Refer to Model Legend Information Bookmark

Hoses Steering and Related
Figure 019-710

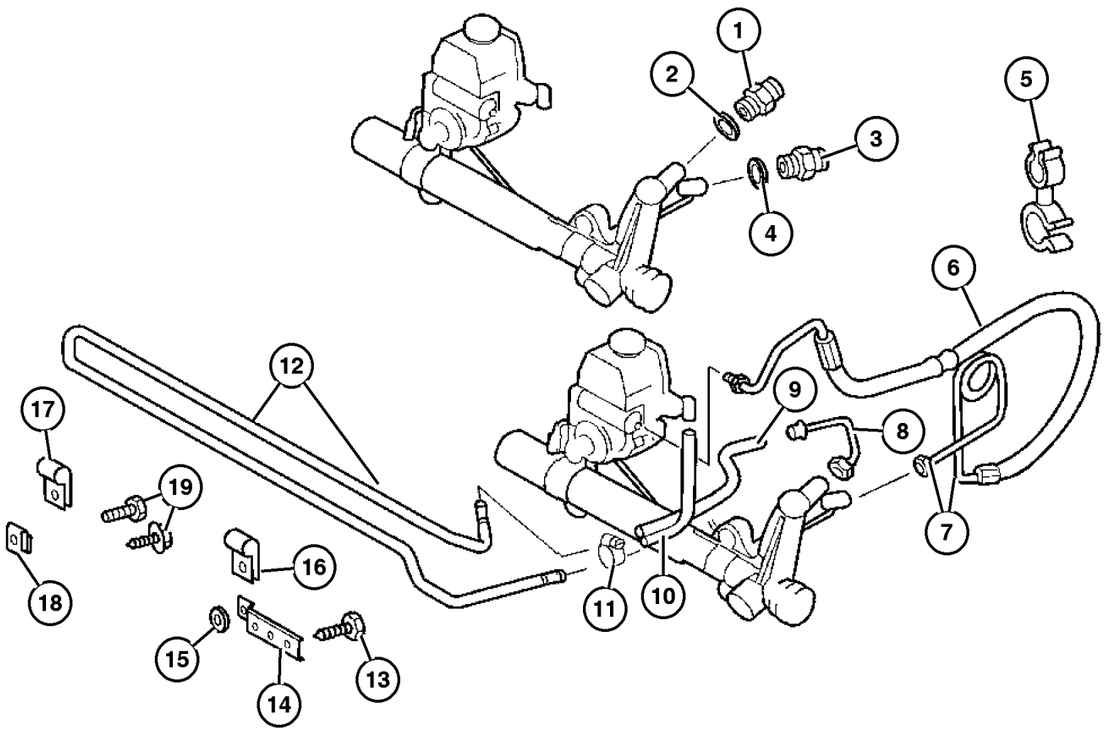

ITEM	PART NUMBER	QTY	LINE	SERIES	BODY	ENGINE	TRANS	TRIM	DESCRIPTION
	5126 283AA	4	2, 6	L	01, 02, 06	EX8	DGZ		
		4	2, 6	L	11, 12, 14, 15, 16	EX8	DGZ		
		4	2, 6	L	51, 52, 54, 55, 56	EX8	DGZ		
		4	3, 7	L	02, 06	EX8	DGZ		
		4	3, 7	L	12, 15, 16	EX8	DGZ		
17									CLAMP
	5132 910AA	2	2, 6	L	01, 02, 06	EX8	DGZ		
		2	2, 6	L	11, 12, 14, 15, 16	EX8	DGZ		
		2	2, 6	L	51, 52, 54, 55, 56	EX8	DGZ		
18									NUT
	5103 733AA	3	2, 6	L	01, 02, 06	EX8	DGZ		
		3	2, 6	L	11, 12, 14, 15, 16	EX8	DGZ		
		3	2, 6	L	51, 52, 54, 55, 56	EX8	DGZ		
		3	3, 7	L	02, 06	EX8	DGZ		
		3	3, 7	L	12, 15, 16	EX8	DGZ		
19									SCREW, (NOT SERVICED) (Not Serviced)

Refer to Model Legend Information Bookmark

AR = Use as required - = Non illustrated part # = New this model year

March 3, 2006

« RETURN TO GROUP INDEX

Group – NAG1

Automatic Transmission 5 Speed [DGZ]

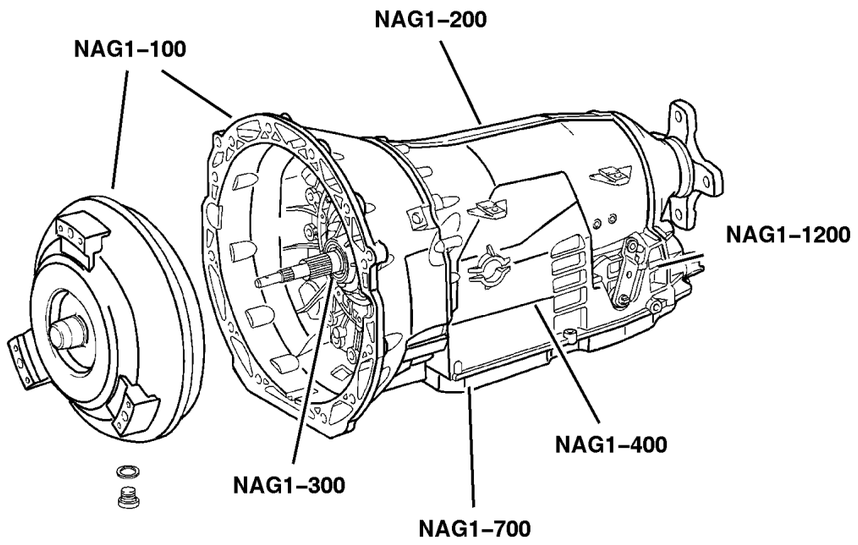

NAG1–100 Transmission Assembly 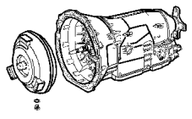	**NAG1–200** Case and Extension 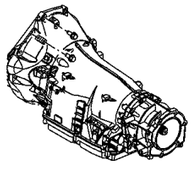	**NAG1–300** Oil Pump 	**NAG1–400** Gear Train 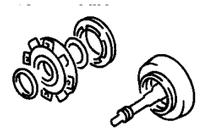
NAG1–700 Valve Body 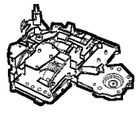	**NAG1–1200** Gearshift Controls 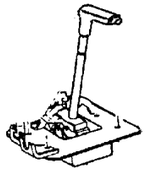		

GROUP NAG1 - Automatic Transmission 5 Speed [DGZ]

Illustration Title — Group-Fig. No.

Transmission Assembly
Automatic Transmission [DGZ] . . . . . Fig. NAG1-110

Case and Extension
Case & Related Parts [DGZ] . . . . . Fig. NAG1-210

Oil Pump
Housing, Converter & Pump, Oil [DGZ] . . . . . Fig. NAG1-310

Gear Train
Laminated Brake & Front Support - [B1] [DGZ] . . . . . Fig. NAG1-410
Gear Train, Front Planetary Clutch - [K-1] [DGZ] . . . . . Fig. NAG1-420
Carrier, Planetary - [K1] - [VPLS] [DGZ] . . . . . Fig. NAG1-430
Clutch - Output Shaft - [K2] [DGZ] . . . . . Fig. NAG1-440
Center & Rear Planetary Set - Output Shaft - [MPLS/HPLS] [DGZ] . . . . . Fig. NAG1-450
Clutch - [K3] [DGZ] . . . . . Fig. NAG1-460
Multiple Disc Brake - [B2 & B3] [DGZ] - 1 Of 3 . . . . . Fig. NAG1-470
Multiple Disc Brake - [B2 & B3] [DGZ] - 2 Of 3 . . . . . Fig. NAG1-480
Multiple Disc Brake - [B2 & B3] [DGJ] - 3 Of 3 . . . . . Fig. NAG1-490

Valve Body
Electronic - Hydraulic Control [DGZ] . . . . . Fig. NAG1-710
Oil Pan & Gasket [DGZ] . . . . . Fig. NAG1-720

Gearshift Controls
Gear Shift Control [DGZ] . . . . . Fig. NAG1-1210

Automatic Transmission [DGZ]
Figure NAG1-110

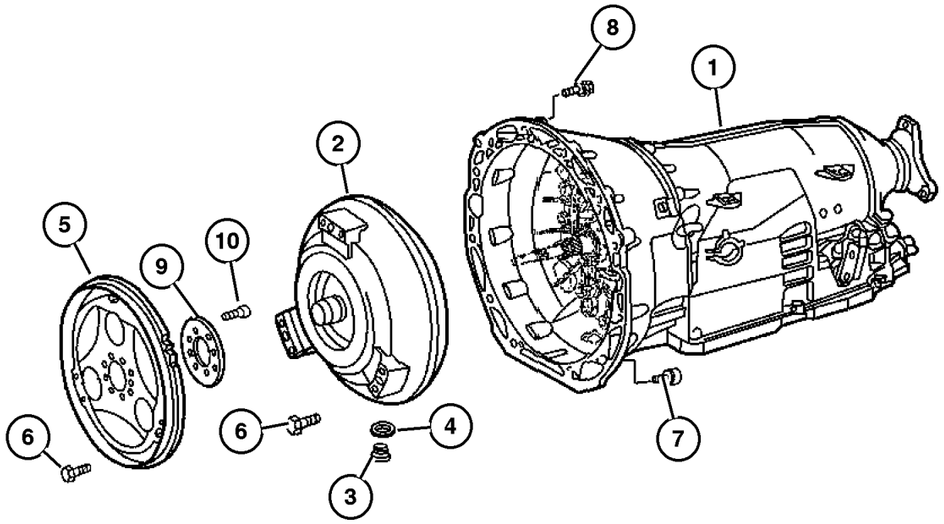

ITEM	PART NUMBER	QTY	LINE	SERIES	BODY	ENGINE	TRANS	TRIM	DESCRIPTION
NOTE:Transmission Assembly Does Not Include Torque Converter. Torque Converter Serviced Separately.									
Sales Codes:									
[DGZ]=5 Speed Automatic Transmission - [NAG1] - [W5A380]									
1									TRANSMISSION, Automatic
	5117 838AA	1	2, 6	L		EX8	DGZ		
		1	3, 7	L		EX8	DGZ		
2	5104 567AA	1	2, 3, 6, 7	L		EX8	DGZ		CONVERTER, Torque
3	5080 398AA	1	2, 3, 6, 7	L		EX8	DGZ		PLUG
4	5080 014AA	1	2, 3, 6, 7	L		EX8	DGZ		O RING
5	5137 274AA	1		L		EX8			FLEX PLATE
6									SCREW
	6507 095AA	6	2, 6	L		EX8	DGZ		
		6	3, 7	L		EX8	DGZ		
7									SCREW
	6104 047AA	2	2, 6	L		EX8	DGZ		
		2	3, 7	L		EX8	DGZ		
8									BOLT, Hex Flange Head, M10x40
	6104 218AA	6	2, 6	L		EX8	DGZ		
		6	3, 7	L		EX8	DGZ		
9	5080 066AA	1				EX8	DGZ		WASHER
10									BOLT, Hex Flange Head, M10x40
	6104 218AA	6	2, 6	L		EX8	DGZ		
		6	3, 7	L		EX8	DGZ		

Refer to Model Legend Information Bookmark

Case & Related Parts [DGZ]
Figure NAG1-210

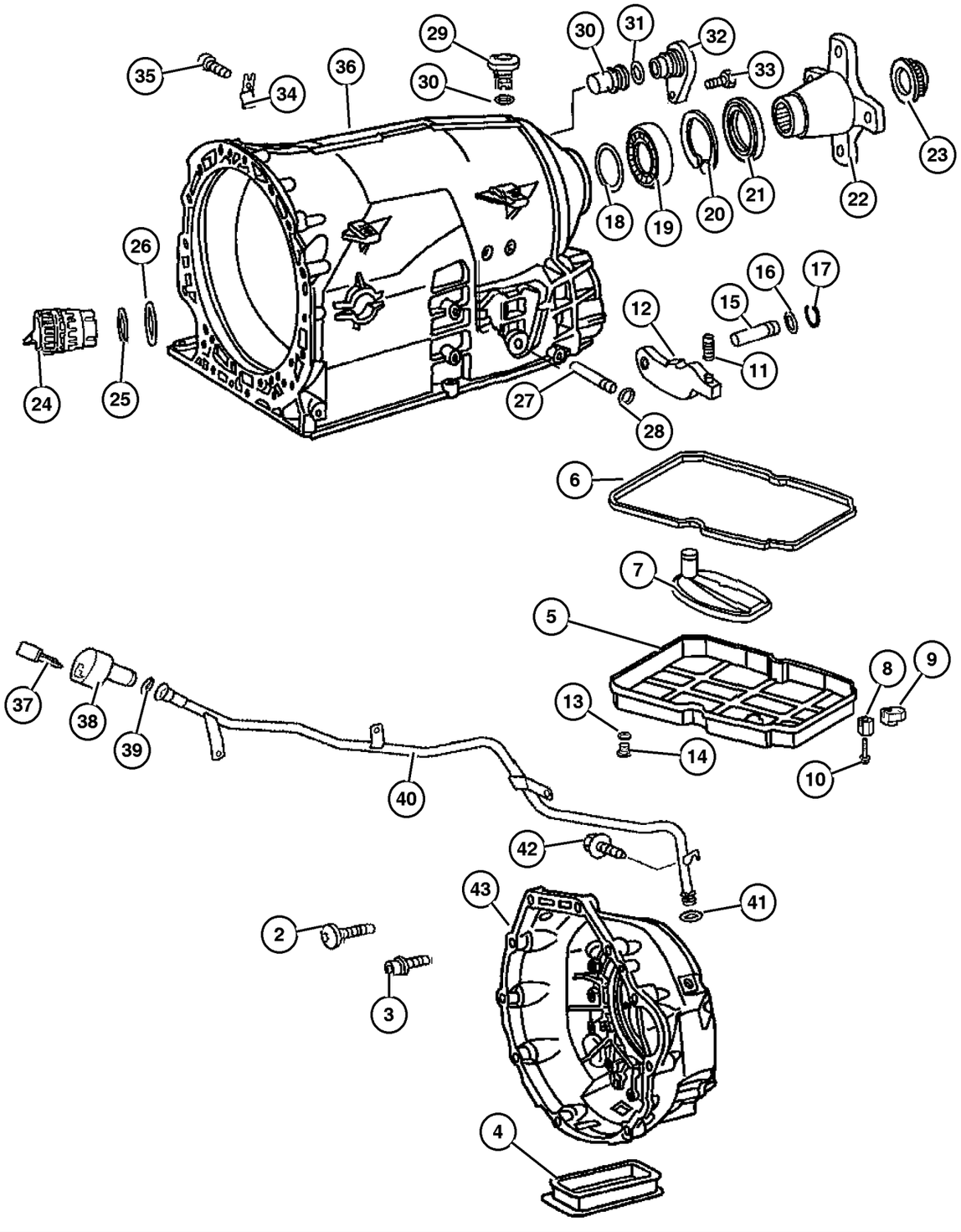

ITEM	PART NUMBER	QTY	LINE	SERIES	BODY	ENGINE	TRANS	TRIM	DESCRIPTION
NOTE:									
Sales Codes:									
[DGZ]=5 Speed Automatic Transmission - [NAG1] - [W5A380]									
-1									GASKET PACKAGE, Transmission
	5080 067AA-	1	2, 6	L		EX8	DGZ		
		1	3, 7	L		EX8	DGZ		
2	52108 396AA	1	2, 3, 6, 7	L		EX8	DGZ		SCREW
3	52107 934AA	1	2, 3, 6, 7	L		EX8	DGZ		SCREW
4	5073 886AA	2	2, 3, 6, 7	L		EX8	DGZ		GASKET
5	52108 326AA	1	2, 3, 6, 7	L		EX8	DGZ		PAN, Transmission Oil
6	52108 332AA	1	2, 3, 6, 7	L		EX8	DGZ		GASKET
7	52108 325AA	1	2, 3, 6, 7	L		EX8	DGZ		FILTER, Transmission Oil
8	52108 334AA	5	2, 3, 6, 7	L		EX8	DGZ		NUT
9	5080 289AA	1	2, 3, 6, 7	L		EX8	DGZ		NUT
10	52108 270AA	6	2, 3, 6, 7	L		EX8	DGZ		SCREW
11	52108 154AA	1	2, 3, 6, 7	L		EX8	DGZ		PAWL, Parking Sprag
12	52108 157AA	1	2, 3, 6, 7	L		EX8	DGZ		SPRING
13	52108 330AA	1	2, 3, 6, 7	L		EX8	DGZ		SEAL, Transmission
14	52108 331AB	1	2, 3, 6, 7	L		EX8	DGZ		MAGNET
15	52108 155AA	1	2, 3, 6, 7	L		EX8	DGZ		PIN
16	52108 160AA	1		L			DGZ		SEAL, Transmission
17	52107 975AA	1	2, 3, 6, 7	L		EX8	DGZ		SNAP RING
18									SPACER
	52108 220AA	1	2, 3, 6, 7	L		EX8	DGZ		[0.3 MM]
	52108 230AA	1	2, 3, 6, 7	L		EX8	DGZ		[0.2 MM]
	52108 231AA	1	2, 3, 6, 7	L		EX8	DGZ		[0.4 MM]
	52108 232AA	1	2, 3, 6, 7	L		EX8	DGZ		[0.5 MM]
19	52108 207AA	1	2, 3, 6, 7	L		EX8	DGZ		BEARING, Ball
20	52108 210AA	1	2, 3, 6, 7	L		EX8	DGZ		LOCK, Mounting
21	52108 428AA	1	2, 3, 6, 7	L		EX8	DGZ		SEAL, Transmission
22	5117 859AA	1	2, 3, 6, 7	L		EX8	DGZ		FLANGE, Drive Shaft
23	52108 334AA	5	2, 3, 6, 7	L		EX8	DGZ		NUT
24	5166 827AA	1	2, 3, 6, 7	L		EX8	DGZ		PLUG, Adapter
25	52108 324AA	1	2, 3, 6, 7	L		EX8	DGZ		O RING, Adapter Plug
26	52108 323AA	1	2, 3, 6, 7	L		EX8	DGZ		O RING, Adapter Plug
27	52108 159AA	1		L			DGZ		PIN
28	52108 323AA	1	2, 3, 6, 7	L		EX8	DGZ		O RING, Adapter Plug
29	52108 364AA	1	2, 3, 6, 7	L		EX8	DGZ		BREATHER, Transmission
30	52108 367AA	1	2, 3, 6, 7	L		EX8	DGZ		SEAL, Transmission
31									O RING, Sensor
	5125 908AA	2	2, 6	L		EX8	DGZ		
		2	3, 7	L		EX8	DGZ		
32	5117 839AA	1	2, 3, 6, 7	L		EX8	DGZ		CAP, Oil Filler
33									BOLT, (NOT SERVICED) (Not Serviced)

Refer to Model Legend Information Bookmark

Case & Related Parts [DGZ]
Figure NAG1-210

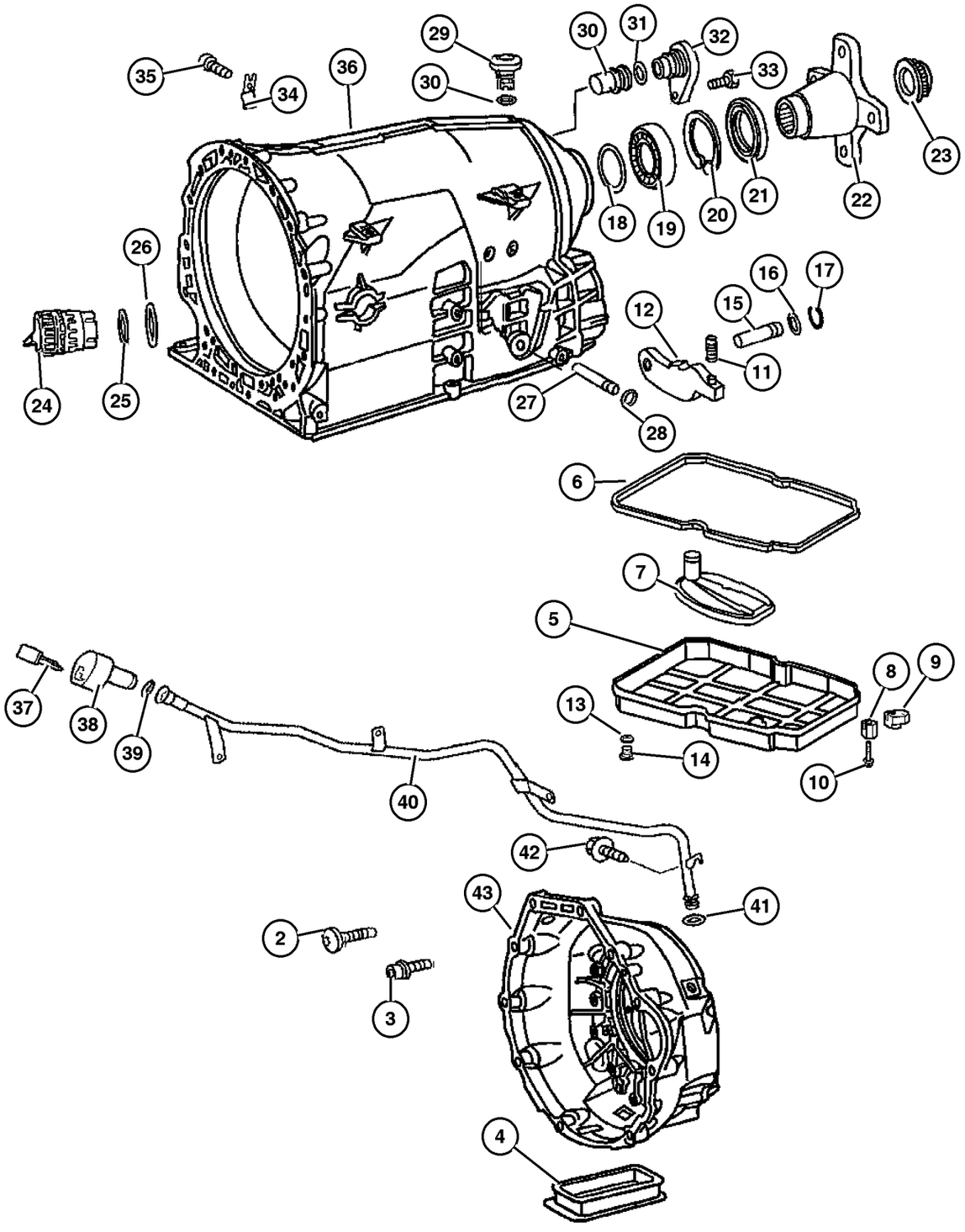

ITEM	PART NUMBER	QTY	LINE	SERIES	BODY	ENGINE	TRANS	TRIM	DESCRIPTION
34	52108 179AA	1	2, 3, 6, 7	L		EX8	DGZ		SPRING
35	52108 161AA	1	2, 3, 6, 7	L		EX8	DGZ		SCREW
36	5117 849AA	1	2, 3, 6, 7	L		EX8	DGZ		HOUSING, Transmission
37									PIN
	5093 746AA	1	2, 6	L		EX8	DGZ		
		1	3, 7	L		EX8	DGZ		
38									CAP, Oil Filler
	53013 549AA	1	2, 6	L		EX8	DGZ		
		1	3, 7	L		EX8	DGZ		
39									SEAL, Oil Filler Tube
	5101 154AA	1	2, 6	L		EX8	DGZ		
		1	3, 7	L		EX8	DGZ		
40									TUBE, Transmission Oil Filler
	5117 847AA	1	2, 6	L		EX8	DGZ		
		1	3, 7	L		EX8	DGZ		
41									SEAL, Oil Filler Tube
	5101 154AA	1	2, 6	L		EX8	DGZ		
		1	3, 7	L		EX8	DGZ		
42									SCREW
	5125 738AA	1	2, 6	L		EX8	DGZ		
		1	3, 7	L		EX8	DGZ		
43	5117 848AA	1	2, 3, 6, 7	L		EX8	DGZ		HOUSING, Torque Converter

Refer to Model Legend Information Bookmark

AR = Use as required - = Non illustrated part # = New this model year

March 3, 2006

« RETURN TO GROUP INDEX

Housing, Converter & Pump, Oil [DGZ]
Figure NAG1-310

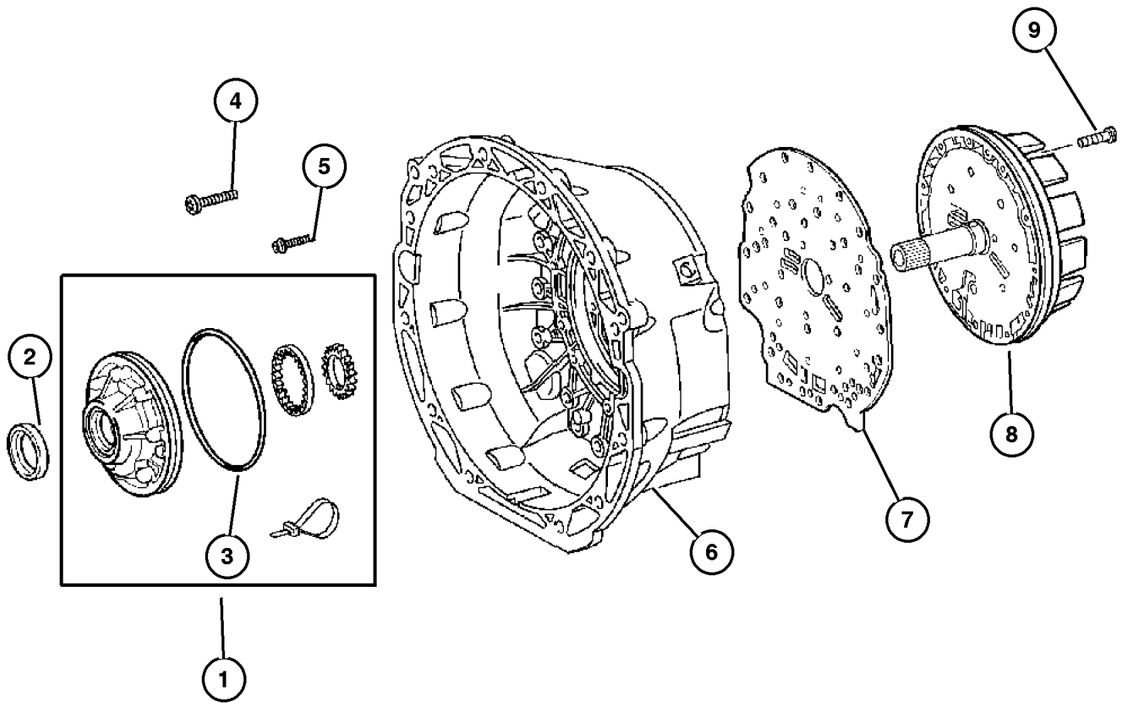

ITEM	PART NUMBER	QTY	LINE	SERIES	BODY	ENGINE	TRANS	TRIM	DESCRIPTION
NOTE:									
Sales Codes:									
[DGZ]=5 Speed Automatic Transmission - [NAG1] - [W5A380]									
1	5080 070AA	1	2, 3, 6, 7	L		EX8	DGZ		PUMP, Transmission Oil
2									SEAL
	52107 898AA	1	2, 3, 6, 7	L		EX8	DGZ		Optional With [52107896AA, 52107897AA, 52108424AA]
	52108 424AA	1	2, 3, 6, 7	L		EX8	DGZ		Optional With [52107896AA, 52107897AA, 52107898AA]
	52107 896AA	1	2, 3, 6, 7	L		EX8	DGZ		Optional With [52107897AA, 52107898AA, 52108424AA]
	52107 897AA	1	2, 3, 6, 7	L		EX8	DGZ		Optional With [52107896AA, 52107898AA, 52108424AA]
3	52107 900AA	1	2, 3, 6, 7	L		EX8	DGZ		O RING
4	52108 396AA	1	2, 3, 6, 7	L		EX8	DGZ		SCREW, Bell Housing To Transmission Case
5	52107 934AA	1	2, 3, 6, 7	L		EX8	DGZ		SCREW, Bell Housing To Disc Support
6	5117 848AA	1	2, 3, 6, 7	L		EX8	DGZ		HOUSING, Torque Converter
7	52108 147AA	1	2, 3, 6, 7	L		EX8	DGZ		PLATE, Intermediate
8	52108 539AC	1	2, 3, 6, 7	L		EX8	DGZ		RETAINER, Clutch
9	52107 933AA	1	2, 3, 6, 7	L		EX8	DGZ		SCREW, Oil Pump To Bell Housing - From Inside Transmission Case 2, 3,6,7, C,U L EX8 DGJ AA

Refer to Model Legend Information Bookmark

Laminated Brake & Front Support - [B1] [DGZ]
Figure NAG1-410

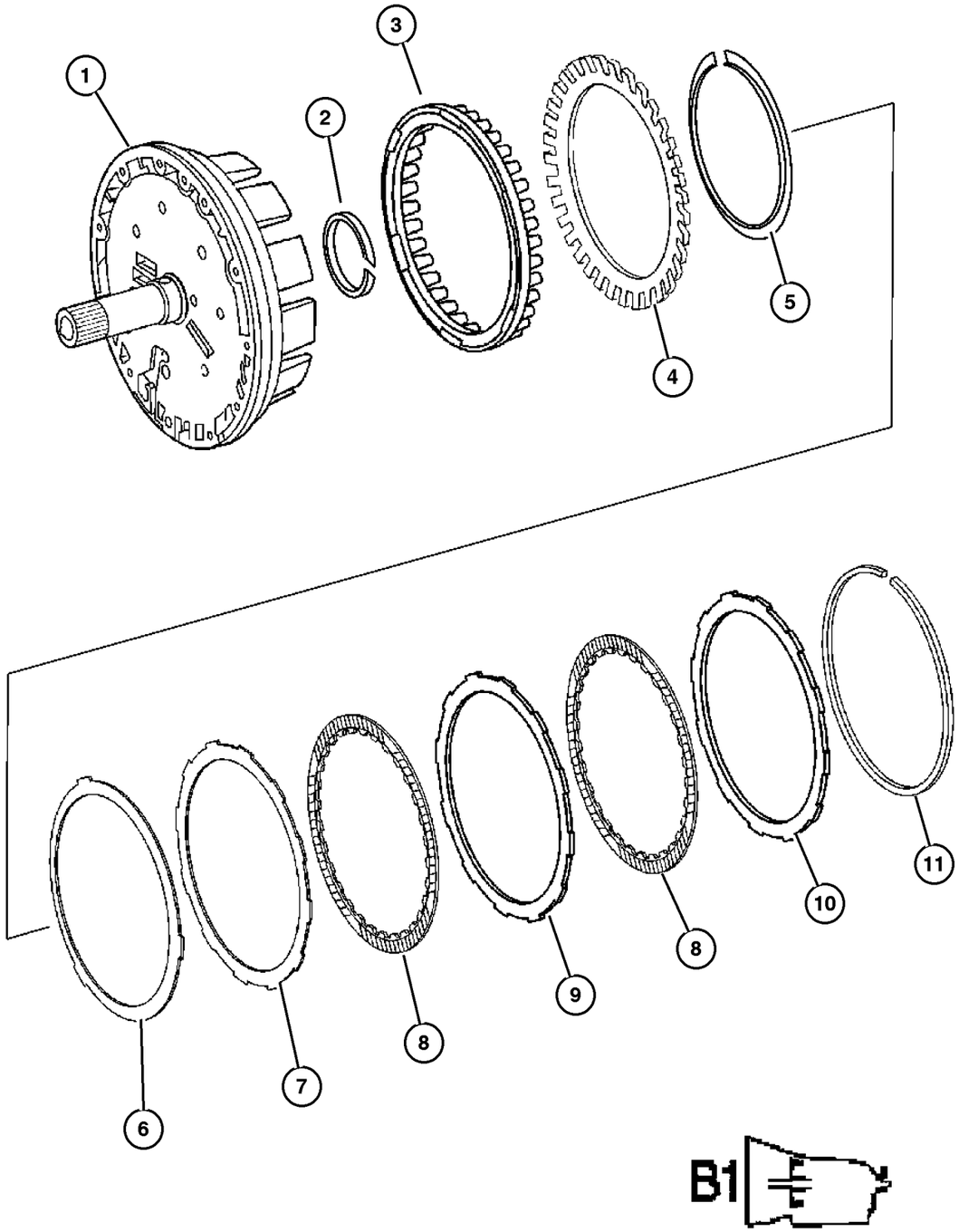

ITEM	PART NUMBER	QTY	LINE	SERIES	BODY	ENGINE	TRANS	TRIM	DESCRIPTION
NOTE:									
Sales Codes:									
[DGZ]=5 Speed Automatic Transmission - [NAG1] - [W5A380]									
1	52108 539AC	1	2, 3, 6, 7	L		EX8	DGZ		RETAINER, Clutch
2	52108 028AA	1	2, 3, 6, 7	L		EX8	DGZ		SEAL, Transmission
3	52108 506AA	1	2, 3, 6, 7	L		EX8	DGZ		PISTON
4	52108 023AA	1	2, 3, 6, 7	L		EX8	DGZ		DISC, Spring
5	52107 936AA	1	2, 3, 6, 7	L		EX8	DGZ		SNAP RING
6	52108 024AA	1	2, 3, 6, 7	L		EX8	DGZ		DISC, Spring
7	52107 992AA	1		L					DISC, Outer, [1.8 MM]
8	52108 507AA	4	2, 3, 6, 7	L		EX8	DGZ		DISC, Inner
9	52108 508AA	4	2, 3, 6, 7	L		EX8	DGZ		DISC, Outer
10	52107 994AA	1	2, 3, 6, 7	L		EX8	DGZ		DISC, Outer, [4.0 MM]
11									SNAP RING
	52107 949AA	1	2, 3, 6, 7	L		EX8	DGZ		[2.6 MM]
	52107 950AA	1	2, 3, 6, 7	L		EX8	DGZ		[2.9 MM]
	52107 951AA	1	2, 3, 6, 7	L		EX8	DGZ		[3.2 MM]
	52107 952AA	1	2, 3, 6, 7	L		EX8	DGZ		[3.5 MM]

Refer to Model Legend Information Bookmark

AR = Use as required - = Non illustrated part # = New this model year

March 3, 2006

« RETURN TO GROUP INDEX

Gear Train, Front Planetary Clutch - [K-1] [DGZ]
Figure NAG1-420

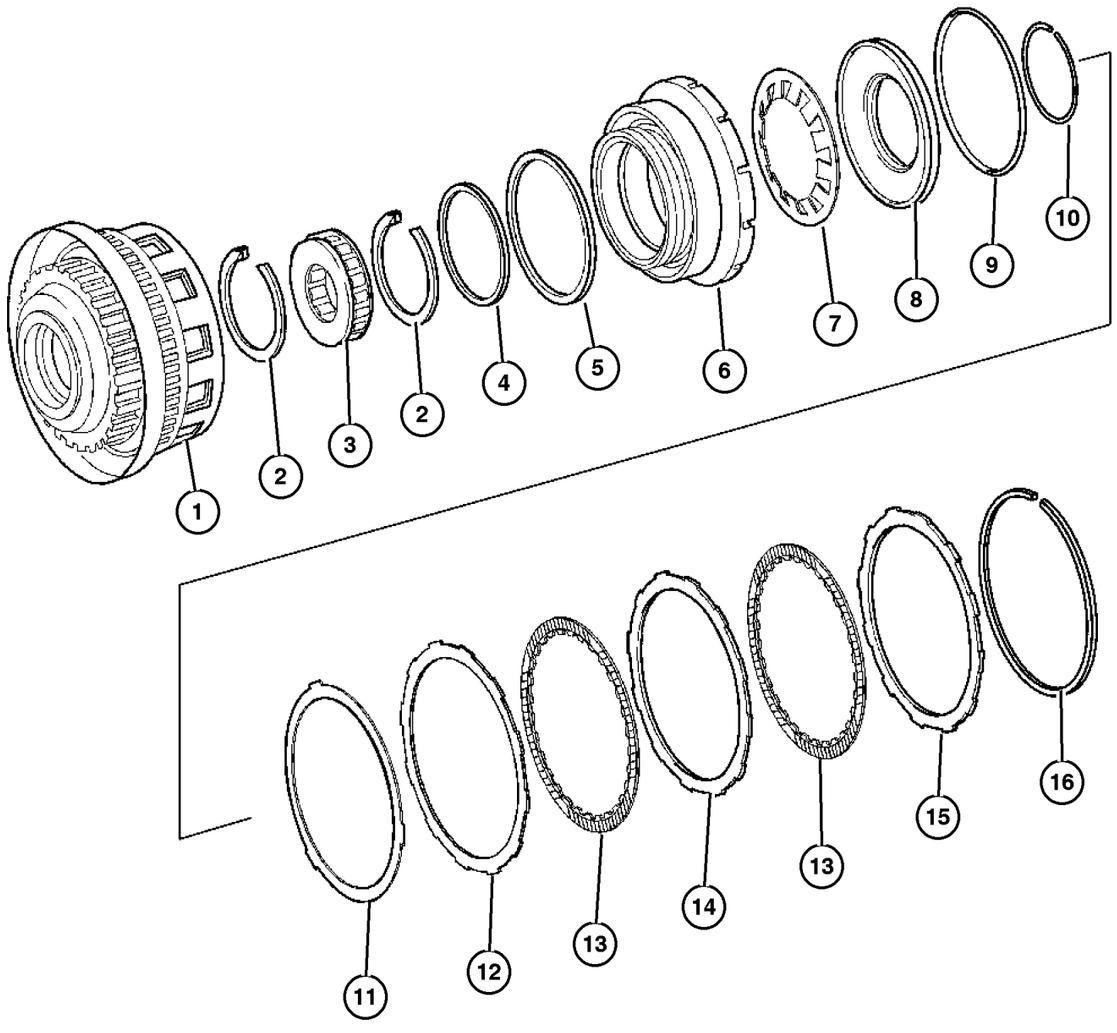

ITEM	PART NUMBER	QTY	LINE	SERIES	BODY	ENGINE	TRANS	TRIM	DESCRIPTION
NOTE:									
Sales Codes:									
[DGZ]=5 Speed Automatic Transmission - [NAG1] - [W5A380]									
1	52108 510AA	1	2, 3, 6, 7	L		EX8	DGZ		DISC, Support
2	52107 955AA	2	2, 3, 6, 7	L		EX8	DGZ		SNAP RING
3	52108 342AA	1	2, 3, 6, 7	L		EX8	DGZ		WHEEL
4	52107 938AA	1	2, 3, 6, 7	L		EX8	DGZ		SEAL, Transmission
5	52107 939AA	1	2, 3, 6, 7	L		EX8	DGZ		SEAL, Transmission
6									PISTON
	52108 059AA	1	2, 6	L		EX8	DGZ		
		1	3, 7	L		EX8	DGZ		
7	52108 057AA	1	2, 3, 6, 7	L		EX8	DGZ		DISC, Spring
8	52108 058AA	1	2, 3, 6, 7	L		EX8	DGZ		SPRING, Retainer
9	52107 941AA	1	2, 3, 6, 7	L		EX8	DGZ		SEAL, Transmission
10	52107 954AA	1	2, 3, 6, 7	L		EX8	DGZ		SNAP RING
11	52108 024AA	1	2, 3, 6, 7	L		EX8	DGZ		DISC, Spring
12	52107 992AA	1		L					DISC, Outer, [1.8 MM]
13	52108 507AA	4	2, 3, 6, 7	L		EX8	DGZ		DISC, Inner
14	52108 508AA	4	2, 3, 6, 7	L		EX8	DGZ		DISC, Outer, [2.07 MM]
15	52107 994AA	1	2, 3, 6, 7	L		EX8	DGZ		DISC, Outer, [4.0 MM]
16									SNAP RING
	52107 949AA	1	2, 3, 6, 7	L		EX8	DGZ		[2.6 MM]
	52107 950AA	1	2, 3, 6, 7	L		EX8	DGZ		[2.9 MM]
	52107 951AA	1	2, 3, 6, 7	L		EX8	DGZ		[3.2 MM]
	52107 952AA	1	2, 3, 6, 7	L		EX8	DGZ		[3.5 MM]
	52108 373AA	1	2, 3, 6, 7	L		EX8	DGZ		[3.8 MM]

Refer to Model Legend Information Bookmark

Carrier, Planetary - [K1] - [VPLS] [DGZ]
Figure NAG1-430

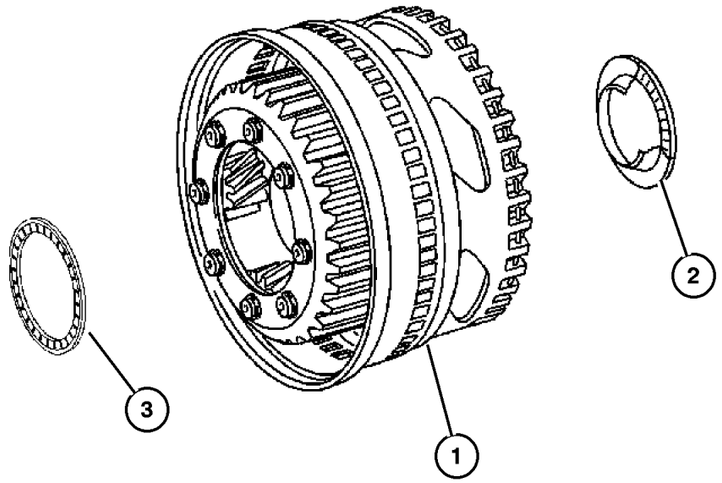

ITEM	PART NUMBER	QTY	LINE	SERIES	BODY	ENGINE	TRANS	TRIM	DESCRIPTION
NOTE:									
Sales Codes:									
[DGZ]=5 Speed Automatic Transmission -[NAG1] - [W5A380]									
1	52108 513AA	1	2, 3, 6, 7	L		EX8	DGZ		CARRIER, Planetary
2	52108 123AA	1	2, 3, 6, 7	L		EX8	DGZ		NEEDLE BEARING
3	52108 122AA	1	2, 3, 6, 7	L		EX8	DGZ		NEEDLE BEARING

Refer to Model Legend Information Bookmark

Clutch - Output Shaft - [K2] [DGZ]
Figure NAG1-440

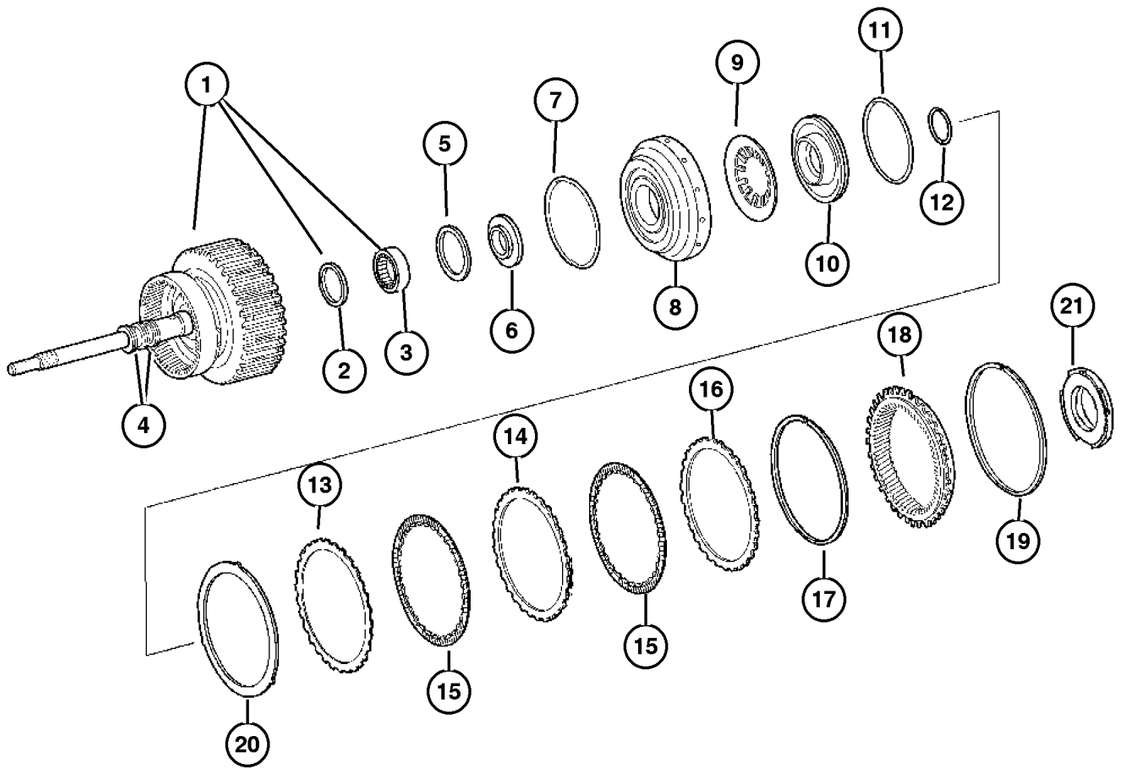

ITEM	PART NUMBER	QTY	LINE	SERIES	BODY	ENGINE	TRANS	TRIM	DESCRIPTION
NOTE:									
Sales Codes:									
[DGZ]=5 Speed Automatic Transmission - [NAG1] - [W5A380]									
1	52108 044AA	1	2, 3, 6, 7	L		EX8	DGZ		SHAFT, Input
2	52108 127AA	1	2, 3, 6, 7	L		EX8	DGZ		SEAL, Transmission
3	52108 126AA	1	2, 3, 6, 7	L		EX8	DGZ		NEEDLE BEARING
4	52108 534AA	1	2, 3, 6, 7	L		EX8	DGZ		SEAL, Transmission
5	52108 134AA	1	2, 3, 6, 7	L		EX8	DGZ		SEAL, Transmission
6	52108 070AA	1	2, 3, 6, 7	L		EX8	DGZ		PLATE
7	52108 135AA	1	2, 3, 6, 7	L		EX8	DGZ		SEAL, Input Shaft
8	52108 517AA	1	2, 3, 6, 7	L		EX8	DGZ		PISTON
9	52108 137AA	1	2, 3, 6, 7	L		EX8	DGZ		DISC, Spring
10	52108 138AB	1	2, 3, 6, 7	L		EX8	DGZ		SPRING, Retainer
11	52108 140AA	1	2, 3, 6, 7	L		EX8	DGZ		SEAL, Transmission
12	52107 970AA	1	2, 3, 6, 7	L		EX8	DGZ		SNAP RING
13	52107 996AA	1	2, 3, 6, 7	L		EX8	DGZ		DISC, Outer, [1.8 MM]
14	52107 997AA	4	2, 3, 6, 7	L		EX8	DGZ		DISC, Outer, [3.5 MM]
15	52108 141AB	5	2, 3, 6, 7	L		EX8	DGZ		DISC, Inner
16	52107 998AA	1	2, 3, 6, 7	L		EX8	DGZ		DISC, Outer
17									SNAP RING
	52107 958AA	1	2, 3, 6, 7	L		EX8	DGZ		[2.3 MM]
	52107 959AA	1	2, 3, 6, 7	L		EX8	DGZ		[2.6 MM]
	52107 960AA	1	2, 3, 6, 7	L		EX8	DGZ		[2.9 MM]
	52107 961AA	1	2, 3, 6, 7	L		EX8	DGZ		[3.2 MM]
18	52107 922AA	1	2, 3, 6, 7	L		EX8	DGZ		GEAR, Rear Annulus
19	52107 926AA	1	2, 3, 6, 7	L		EX8	DGZ		SNAP RING
20	52108 346AA	1	2, 3, 6, 7	L		EX8	DGZ		DISC, Spring
21									BEARING, Thrust
	5138 437AA	1	2, 3, 6, 7	L		EX8	DGZ		Optional With [05138438AA]
	5138 438AA	1	2, 3, 6, 7	L		EX8	DGZ		Optional With [05138437AA]

Refer to Model Legend Information Bookmark

AR = Use as required - = Non illustrated part # = New this model year

March 3, 2006

« RETURN TO GROUP INDEX

Center & Rear Planetary Set - Output Shaft - [MPLS/HPLS] [DGZ]
Figure NAG1-450

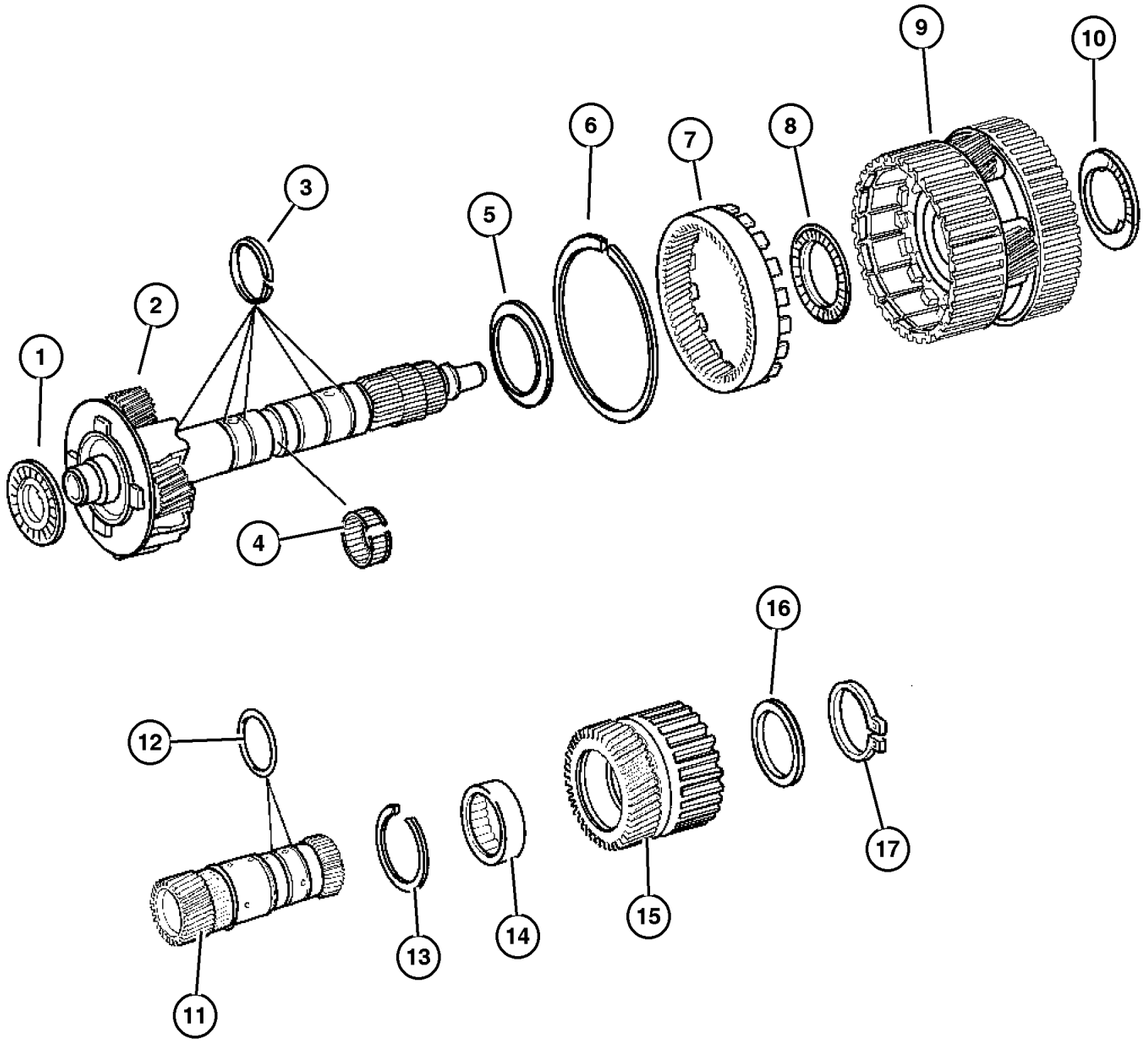

MPLS/HPLS

ITEM	PART NUMBER	QTY	LINE	SERIES	BODY	ENGINE	TRANS	TRIM	DESCRIPTION
NOTE:									
Sales Codes:									
[DGZ]=5 Speed Automatic Transmission - [NAG1] - [W5A380]									
1									BEARING, Thrust
	5138 437AA	1	2, 3, 6, 7	L		EX8	DGZ		Optional With [05138438AA]
	5138 438AA	1	2, 3, 6, 7	L		EX8	DGZ		Optional With [05138437AA]
2	52107 929AA	1	2, 3, 6, 7	L		EX8	DGZ		SHAFT, Output
3	52108 427AA	5	2, 3, 6, 7	L		EX8	DGZ		SEAL, Transmission
4	52108 069AA	1	2, 3, 6, 7	L		EX8	DGZ		NEEDLE BEARING
5	52108 070AA	1	2, 3, 6, 7	L		EX8	DGZ		PLATE
6	52108 374AA	1	2, 3, 6, 7	L		EX8	DGZ		SNAP RING
7	52108 376AA	1	2, 3, 6, 7	L		EX8	DGZ		GEAR, Annulus
8	52107 931AA	1	2, 3, 6, 7	L		EX8	DGZ		NEEDLE BEARING
9	52108 072AA	1	2, 3, 6, 7	L		EX8	DGZ		CARRIER, Planetary
10	52107 932AA	1	2, 3, 6, 7	L		EX8	DGZ		NEEDLE BEARING
11	52108 078AA	1	2, 3, 6, 7	L		EX8	DGZ		GEAR, Sun
12	52108 085AA	2	2, 3, 6, 7	L		EX8	DGZ		SEAL, Transmission
13	52107 966AA	1	2, 3, 6, 7	L		EX8	DGZ		SNAP RING
14	52108 522AA	1	2, 3, 6, 7	L		EX8	DGZ		BEARING, Output Shaft
15	52108 519AA	1	2, 3, 6, 7	L		EX8	DGZ		GEAR, Sun
16	52108 379AA	1	2, 3, 6, 7	L		EX8	DGZ		SPACER
17	52107 967AA	1	2, 3, 6, 7	L		EX8	DGZ		SNAP RING

Refer to Model Legend Information Bookmark

AR = Use as required - = Non illustrated part # = New this model year

March 3, 2006

« RETURN TO GROUP INDEX

Clutch - [K3] [DGZ]
Figure NAG1-460

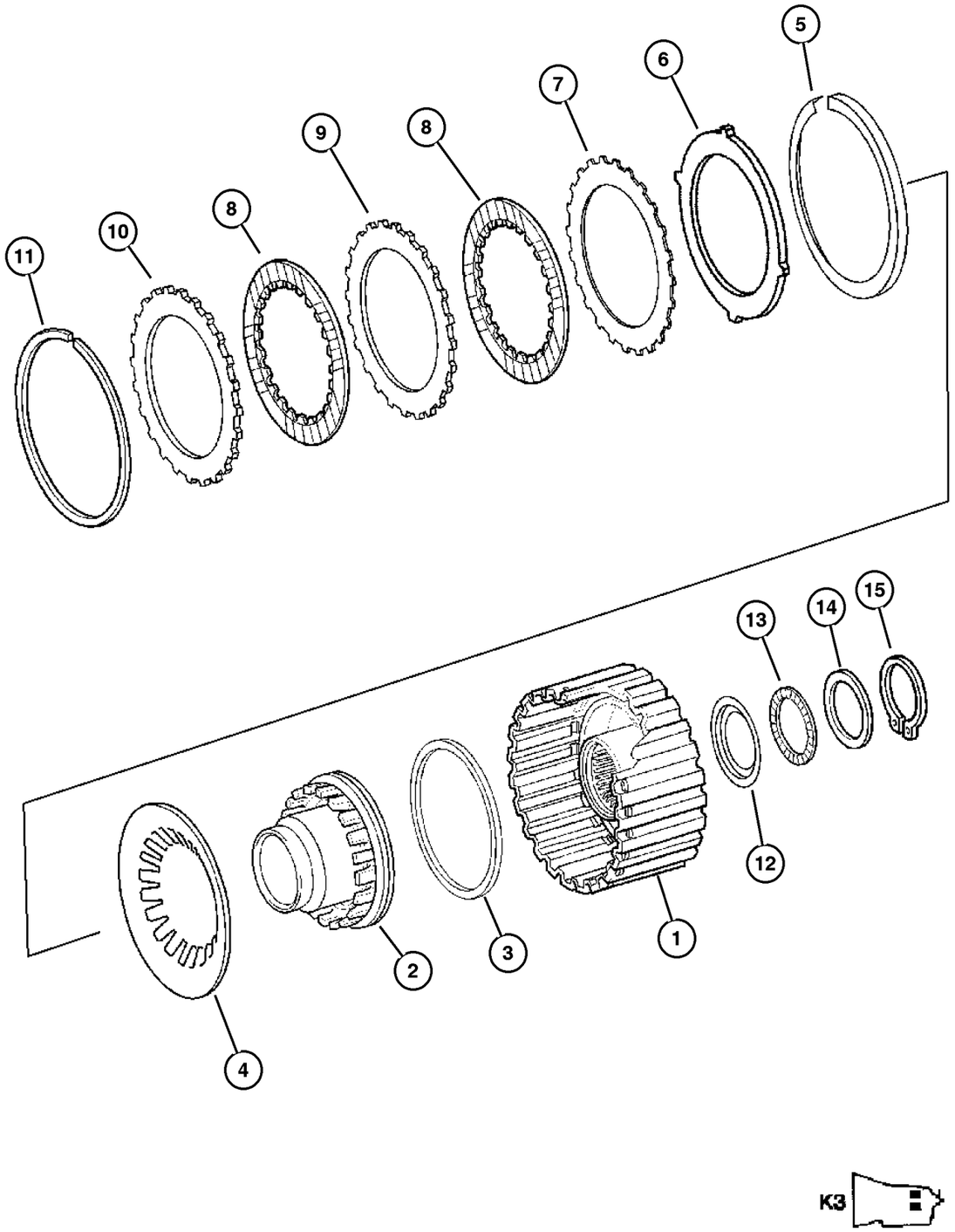

K3

ITEM	PART NUMBER	QTY	LINE	SERIES	BODY	ENGINE	TRANS	TRIM	DESCRIPTION
NOTE:									
Sales Codes:									
[DGZ]=5 Speed Automatic Transmission - [NAG1] - [W5A380]									
1	52108 524AA	1	2, 3, 6, 7	L		EX8	DGZ		RETAINER, Clutch
2	52108 094AA	1	2, 3, 6, 7	L		EX8	DGZ		PISTON
3	52108 093AA	1	2, 3, 6, 7	L		EX8	DGZ		SEAL, Transmission
4	52108 095AA	1	2, 3, 6, 7	L		EX8	DGZ		DISC, Spring
5	52107 968AA	1	2, 3, 6, 7	L		EX8	DGZ		SNAP RING
6	52108 096AA	1	2, 3, 6, 7	L		EX8	DGZ		DISC, Spring
7	52108 004AA	4	2, 3, 6, 7	L		EX8	DGZ		DISC, Outer, [1.8 MM]
8	52108 528AA	4	2, 3, 6, 7	L		EX8	DGZ		DISC, Inner
9	52108 529AA	4	2, 3, 6, 7	L		EX8	DGZ		DISC, Outer, [2.07 MM]
10	52108 011AA	1	2, 3, 6, 7	L		EX8	DGZ		DISC, Outer, [4.0 MM]
11									SNAP RING
	52107 970AA	1	2, 3, 6, 7	L		EX8	DGZ		[2.3 MM]
	52107 971AA	1	2, 3, 6, 7	L		EX8	DGZ		[2.6 MM]
	52107 972AA	1	2, 3, 6, 7	L		EX8	DGZ		[2.9 MM]
	52107 973AA	1	2, 3, 6, 7	L		EX8	DGZ		[3.2 MM]
	52107 974AA	1	2, 3, 6, 7	L		EX8	DGZ		[2.0 MM]
12	52108 148AA	1	2, 3, 6, 7	L		EX8	DGZ		SPACER
13	52108 152AA	1	2, 3, 6, 7	L		EX8	DGZ		NEEDLE BEARING
14									PLATE
	52108 149AA	1	2, 3, 6, 7	L		EX8	DGZ		[3.7 MM]
	52108 150AA	1	2, 3, 6, 7	L		EX8	DGZ		[3.1 MM]
	52108 151AA	1	2, 3, 6, 7	L		EX8	DGZ		[3.4 MM]
15	6507 358AA	1	2, 3, 6, 7	L		EX8	DGZ		RING

Refer to Model Legend Information Bookmark

Multiple Disc Brake - [B2 & B3] [DGZ] - 1 Of 3
Figure NAG1-470

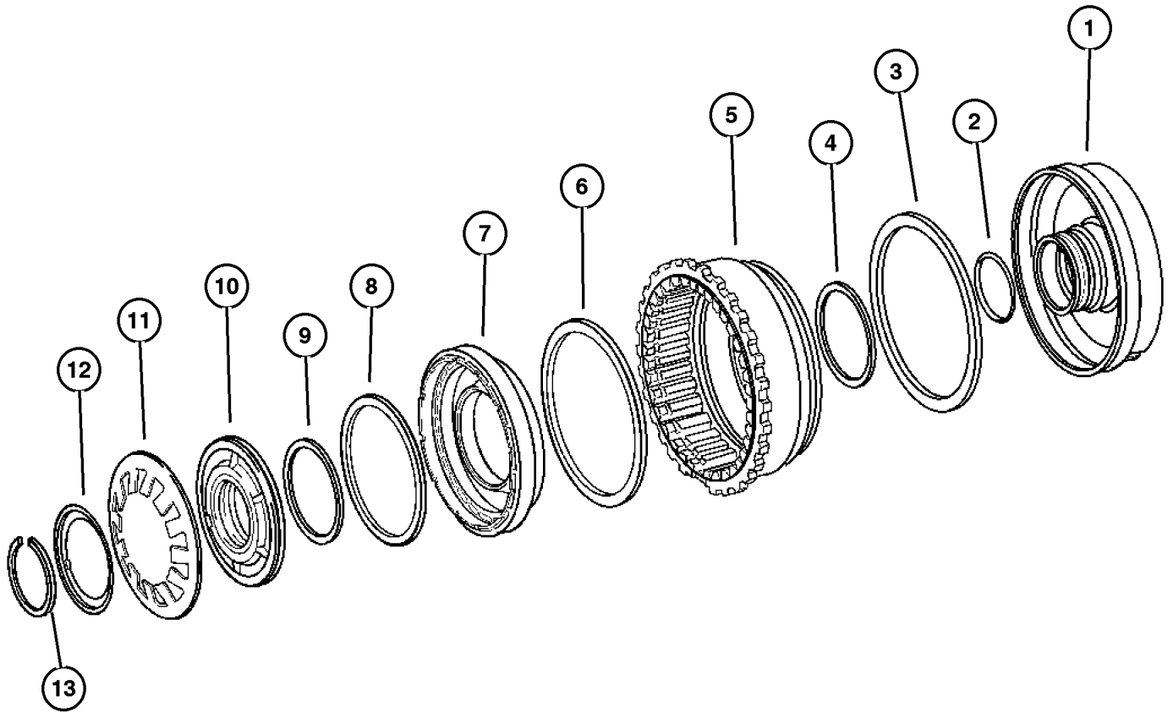

ITEM	PART NUMBER	QTY	LINE	SERIES	BODY	ENGINE	TRANS	TRIM	DESCRIPTION
NOTE:									
Sales Codes:									
[DGZ]=5 Speed Automatic Transmission - [NAG1] - [W5A380]									
1	52108 182AA	1	2, 3, 6, 7	L		EX8	DGZ		PLUNGER
2	52108 185AA	1	2, 3, 6, 7	L		EX8	DGZ		SEAL, Transmission
3	52108 188AA	1	2, 3, 6, 7	L		EX8	DGZ		SEAL, Transmission
4	52108 189AA	1	2, 3, 6, 7	L		EX8	DGZ		SEAL, Transmission
5	52108 395AA	1	2, 3, 6, 7	L		EX8	DGZ		PISTON
6	52108 199AA	1	2, 3, 6, 7	L		EX8	DGZ		SEAL, Transmission
7	52108 191AA	1	2, 3, 6, 7	L		EX8	DGZ		PISTON
8	52108 200AA	1	2, 3, 6, 7	L		EX8	DGZ		SEAL, Transmission
9	52108 201AA	1	2, 3, 6, 7	L		EX8	DGZ		SEAL, Transmission
10	52108 351AA	1	2, 3, 6, 7	L		EX8	DGZ		RING, Piston
11	52108 202AA	1	2, 3, 6, 7	L		EX8	DGZ		DISC, Spring
12	52108 203AA	1	2, 3, 6, 7	L		EX8	DGZ		SPRING, Retainer
13	52107 977AA	1	2, 3, 6, 7	L		EX8	DGZ		SNAP RING

B2/B3

Refer to Model Legend Information Bookmark

AR = Use as required - = Non illustrated part # = New this model year

March 3, 2006

RETURN TO GROUP INDEX

Multiple Disc Brake - [B2 & B3] [DGZ] - 2 Of 3
Figure NAG1-480

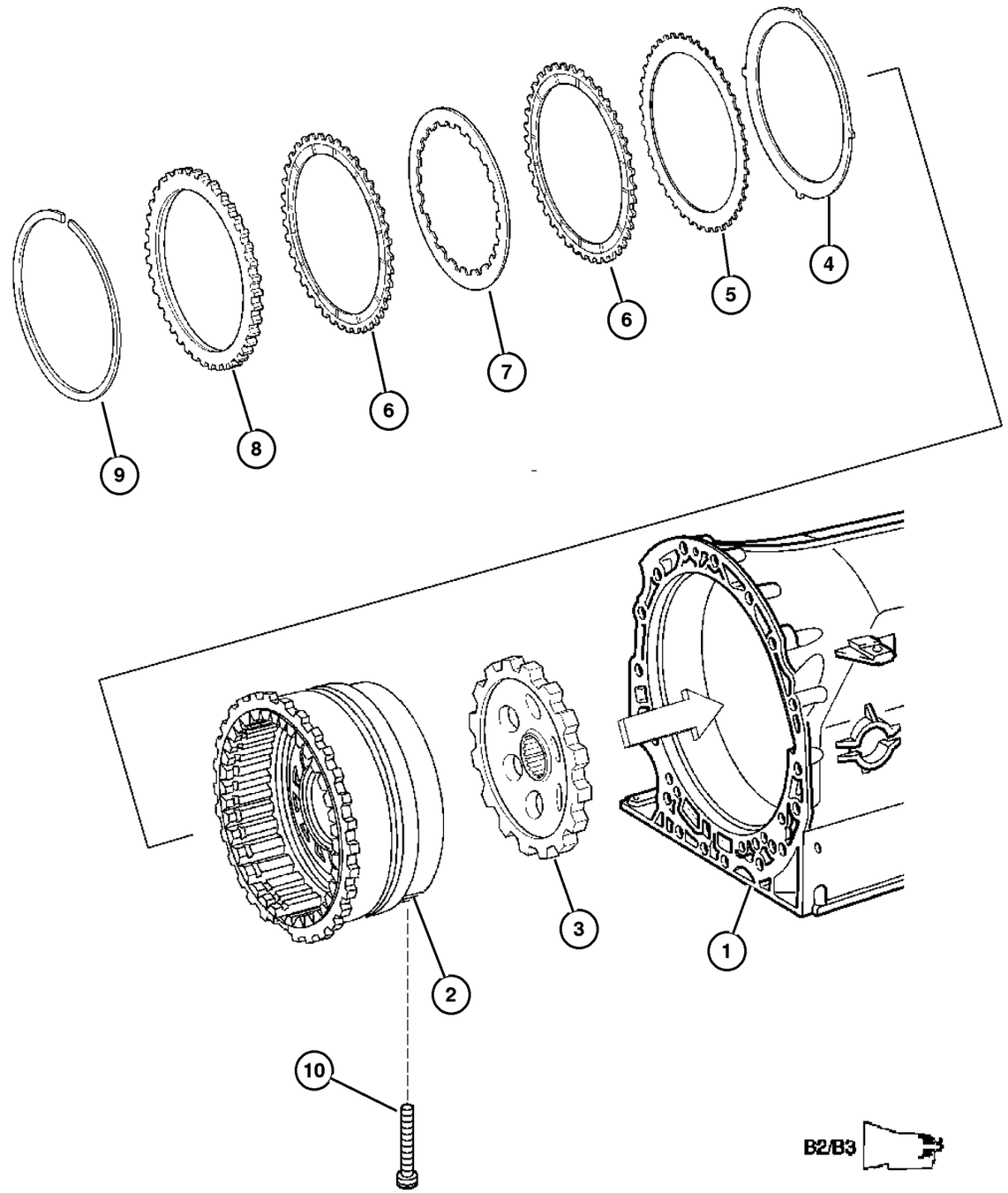

ITEM	PART NUMBER	QTY	LINE	SERIES	BODY	ENGINE	TRANS	TRIM	DESCRIPTION
NOTE:Drum Package Is Not Serviced In An Assembly. Please See Illustration [#470] Callouts [1,2,3,4 & 5] To Obtain Part Numbers									
Sales Codes:									
[DGZ]=5 Speed Automatic Transmission - [NAG1] - [W5A380]									
1									CASE, Transmission, See Illustration [#210], (NOT SERVICED) (Not Serviced)
2									DRUM PACKAGE, Transmission, See Illustration [#470] Callout [# 1, 2,3,4 & 5], (NOT SERVICED) (Not Serviced)
3	52108 180AA	1	2, 3, 6, 7	L		EX8	DGZ		LOCK, Parking Wheel
4	52108 354AA	1	2, 3, 6, 7	L		EX8	DGZ		DISC, Spring
5	52108 013AA	1	2, 3, 6, 7	L		EX8	DGZ		DISC, Outer, [1.8 MM]
6	52108 572AA	1	2, 3, 6, 7	L		EX8	DGZ		DISC, Outer
7	52108 015AA	1	2, 3, 6, 7	L		EX8	DGZ		DISC, Inner, [1.8 MM]
8	52108 014AA	1	2, 3, 6, 7	L		EX8	DGZ		DISC, Outer, [6.5 MM]
9									SNAP RING
	52107 979AA	1	2, 3, 6, 7	L		EX8	DGZ		[4.1 MM]
	52107 980AA	1	2, 3, 6, 7	L		EX8	DGZ		[3.8 MM]
	52107 981AA	1	2, 3, 6, 7	L		EX8	DGZ		[3.5 MM]
	52107 982AA	1	2, 3, 6, 7	L		EX8	DGZ		[3.2 MM]
	52107 983AA	1	2, 3, 6, 7	L		EX8	DGZ		[2.9 MM]
10	52108 205AA	1	2, 3, 6, 7	L		EX8	DGZ		SCREW

Refer to Model Legend Information Bookmark

Multiple Disc Brake - [B2 & B3] [DGJ] - 3 Of 3
Figure NAG1-490

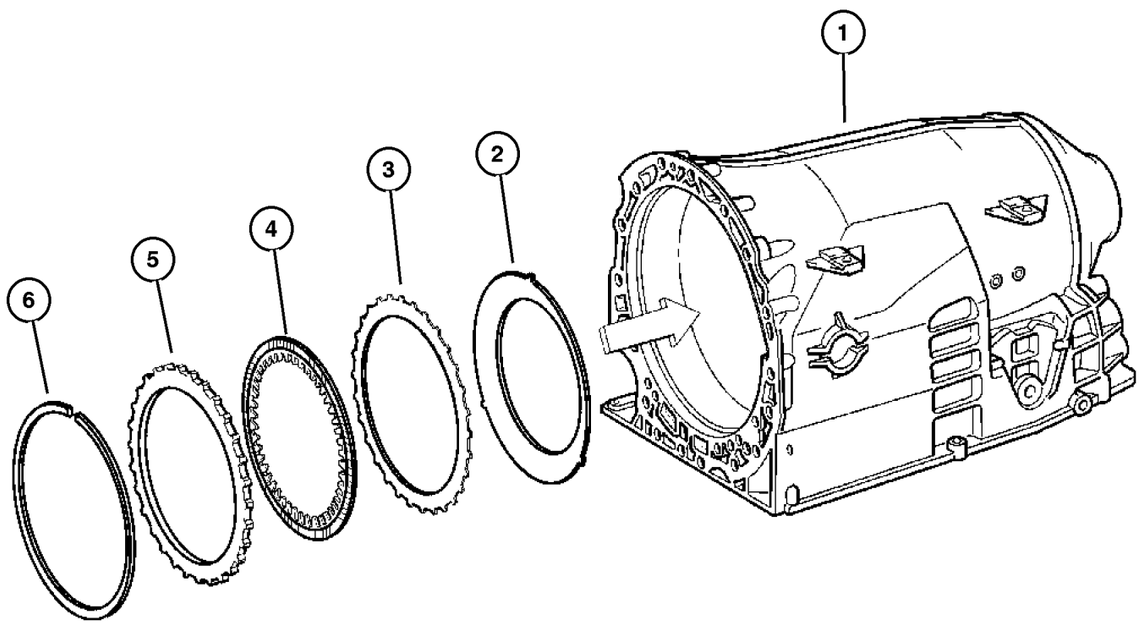

ITEM	PART NUMBER	QTY	LINE	SERIES	BODY	ENGINE	TRANS	TRIM	DESCRIPTION
NOTE:									
Sales Codes:									
[DGZ]=5 Speed Automatic Transmission - [NAG1] - [W5A380]									
1									HOUSING, Transmission Case, Serviced With Transmission Assembly, (NOT SERVICED) (Not Serviced)
2	52108 356AA	1	2, 3, 6, 7	L		EX8	DGZ		DISC, Spring
3	52108 017AA	5	2, 3, 6, 7	L		EX8	DGZ		DISC, Outer, [1.8 MM]
4	52108 573AA	1	2, 3, 6, 7	L		EX8	DGZ		DISC, Inner
5	52108 018AA	1	2, 3, 6, 7	L		EX8	DGZ		DISC, Outer, [6.5 MM]
6									SNAP RING
	52107 985AA	1	2, 3, 6, 7	L		EX8	DGZ		[3.2 MM]
	52107 986AA	1	2, 3, 6, 7	L		EX8	DGZ		[3.5 MM]
	52107 987AA	1	2, 3, 6, 7	L		EX8	DGZ		[3.8 MM]
	52107 988AA	1	2, 3, 6, 7	L		EX8	DGZ		[4.1 MM]
	52107 989AA	1	2, 3, 6, 7	L		EX8	DGZ		[4.4 MM]
	52107 990AA	1	2, 3, 6, 7	L		EX8	DGZ		[4.8 MM]

B2/B3

Refer to Model Legend Information Bookmark

Electronic - Hydraulic Control [DGZ]
Figure NAG1-710

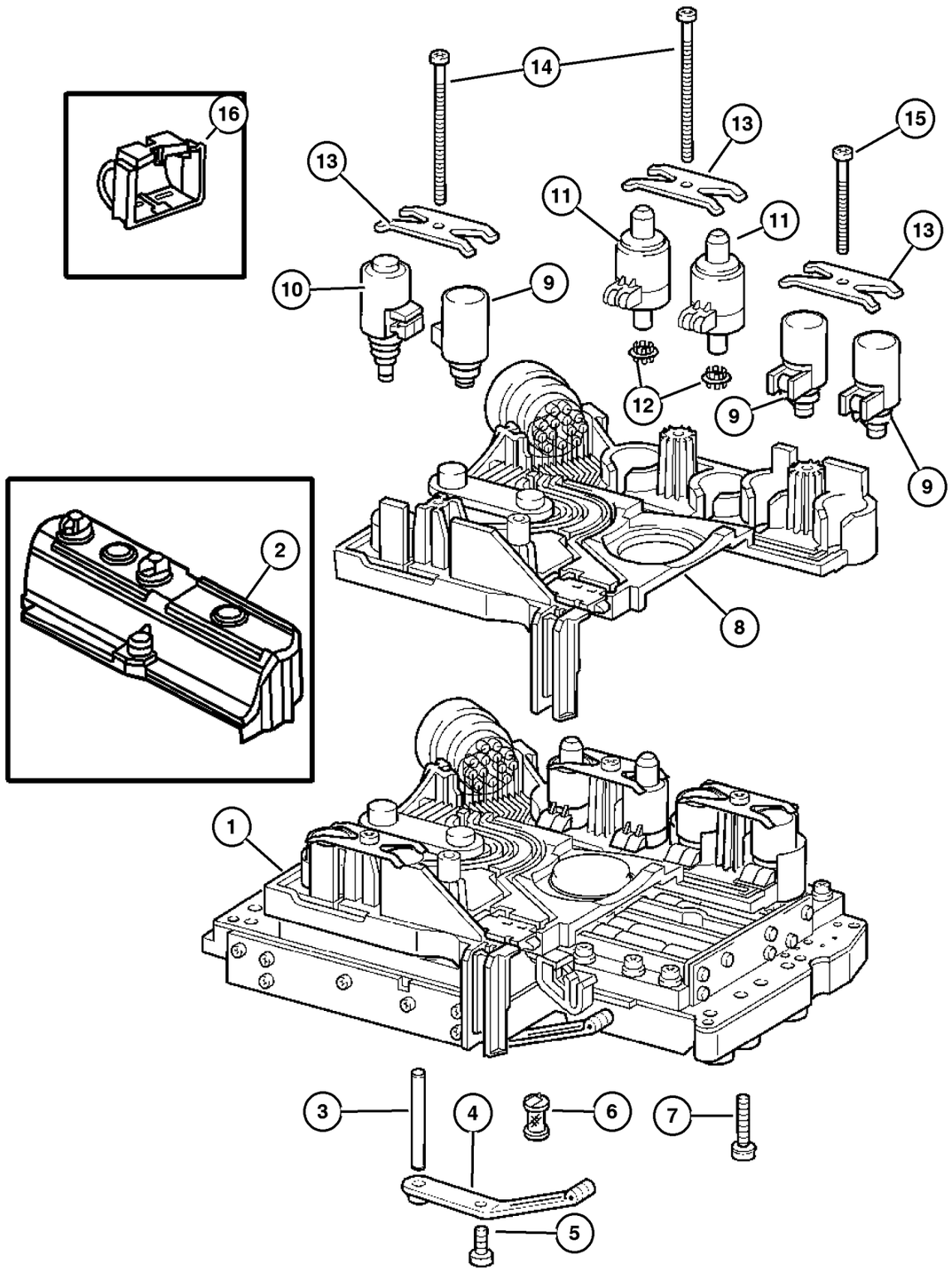

ITEM	PART NUMBER	QTY	LINE	SERIES	BODY	ENGINE	TRANS	TRIM	DESCRIPTION
NOTE:Valve Body Connector Includes Speed Sensor									
Sales Codes:									
[DGZ]=5 Speed Automatic Transmission - [NAG1] - [W5A380]									
1	5080 262AA	1	2, 3, 6, 7	L		EX8	DGZ		VALVE BODY, Complete
2	52108 320AA	1	2, 3, 6, 7	L		EX8	DGZ		SHIELD, Transmission Solenoid
3	5098 951AA	1	2, 3, 6, 7	L		EX8	DGZ		DOWEL
4	52108 258AA	1	2, 3, 6, 7	L		EX8	DGZ		SPRING
5	52108 266AB	1	2, 3, 6, 7	L		EX8	DGZ		SCREW
6	52108 304AA	1	2, 3, 6, 7	L		EX8	DGZ		FILTER, Transmission Oil
7	52108 267AA	10	2, 3, 6, 7	L		EX8	DGZ		SCREW
8	52108 308AB	1	2, 3, 6, 7	L		EX8	DGZ		CONNECTOR
9	5134 760AA	3	2, 3, 6, 7	L		EX8	DGZ		SOLENOID, Transmission
10	52108 314AA	1	2, 3, 6, 7	L		EX8	DGZ		SOLENOID, Transmission, PWM Valve / Selector Valve
11	5138 838AA	2	2, 3, 6, 7	L		EX8	DGZ		SOLENOID, Transmission, Lifting Magnet
12	52108 316AA	2	2, 3, 6, 7	L		EX8	DGZ		FILTER, Transmission Oil
13	52108 315AA	3	2, 3, 6, 7	L		EX8	DGZ		PLATE
14	52108 268AA	2	2, 3, 6, 7	L		EX8	DGZ		SCREW, [M6x80.0]
15	52108 269AA	1	2, 3, 6, 7	L		EX8	DGZ		SCREW, [M6.55]
16	5134 761AA	3	2, 3, 6, 7	L		EX8	DGZ		COVER, Valve Body

Refer to Model Legend Information Bookmark

Oil Pan & Gasket [DGZ]
Figure NAG1-720

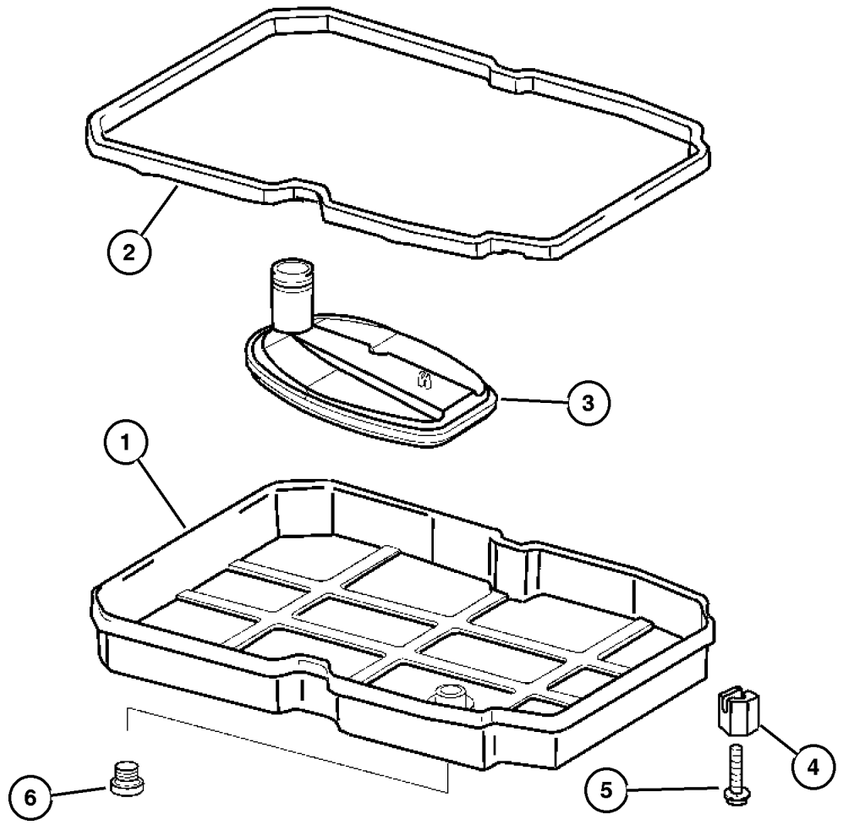

ITEM	PART NUMBER	QTY	LINE	SERIES	BODY	ENGINE	TRANS	TRIM	DESCRIPTION
NOTE:									
Sales Codes:									
[DGZ]=5 Speed Automatic Transmission - [NAG1] - [W5A380]									
1	52108 326AA	1	2, 3, 6, 7	L		EX8	DGZ		PAN, Transmission Oil
2	52108 332AA	1	2, 3, 6, 7	L		EX8	DGZ		GASKET
3	52108 325AA	1	2, 3, 6, 7	L		EX8	DGZ		FILTER, Transmission Oil
4	52108 334AA	5	2, 3, 6, 7	L		EX8	DGZ		NUT
5	52108 270AA	6	2, 3, 6, 7	L		EX8	DGZ		SCREW
6	52108 331AA	1	2, 3, 6, 7	L		EX8	DGZ		MAGNET

Refer to Model Legend Information Bookmark

Gear Shift Control [DGZ]
Figure NAG1-1210

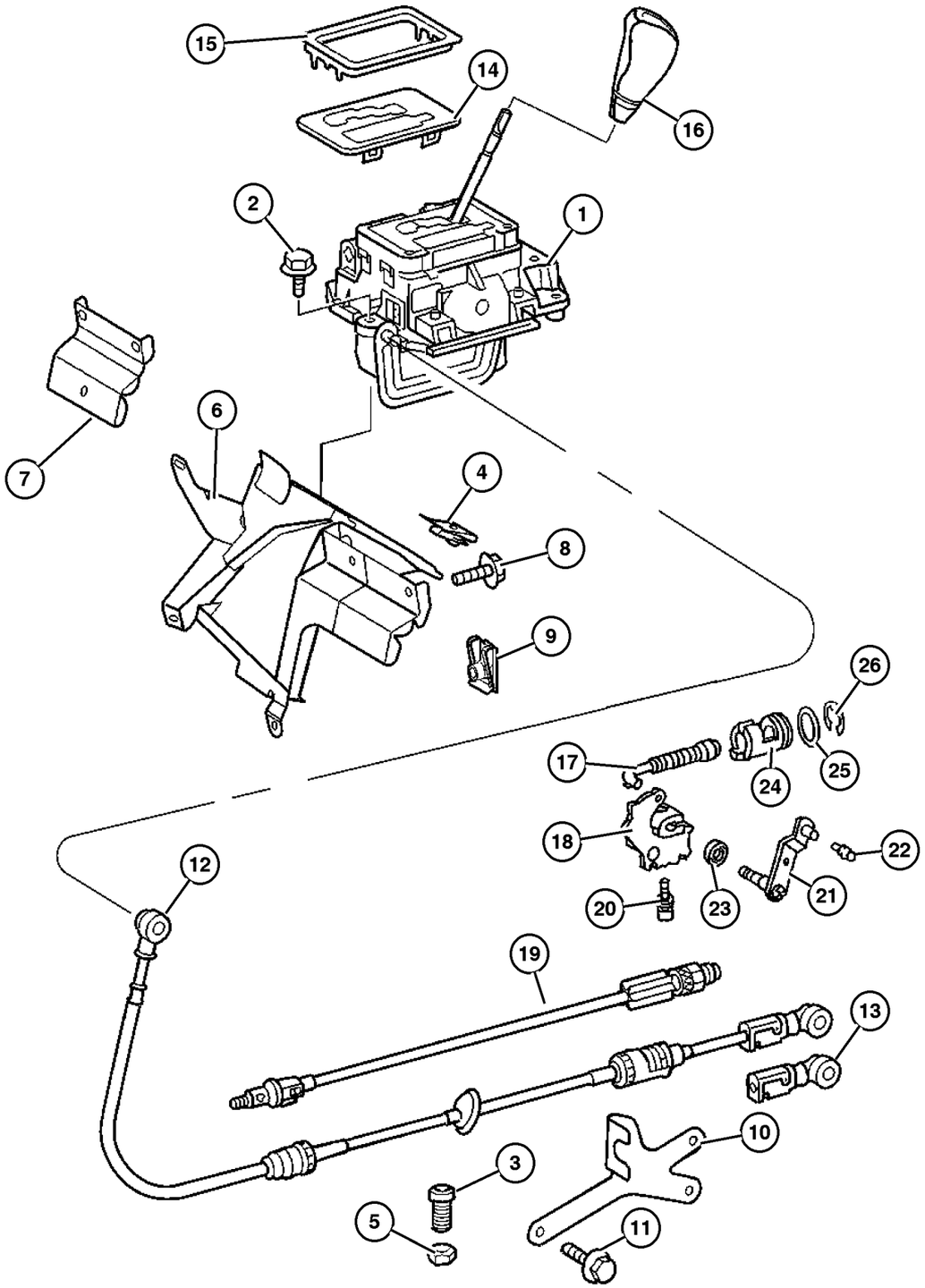

ITEM	PART NUMBER	QTY	LINE	SERIES	BODY	ENGINE	TRANS	TRIM	DESCRIPTION
NOTE:									
Sales Codes:									
[DGZ]=5 Speed Automatic Transmission - [NAG1] - [W5A380]									
1									SHIFTER, Transmission
	5104 040AA	1	2, 6	L		EX8	DGZ		
		1	3, 7	L		EX8	DGZ		
2									SCREW
	5133 476AB	2	2, 6	L		EX8	DGZ		
		2	3, 7	L		EX8	DGZ		
3									SCREW
	6104 142AA	2	2, 6	L		EX8	DGZ		
		2	3, 7	L		EX8	DGZ		
4									NUT
	5103 733AA	3	2, 6	L		EX8	DGZ		
		3	3, 7	L		EX8	DGZ		
5									NUT
	5126 253AA	2	2, 6	L		EX8	DGZ		
		2	3, 7	L		EX8	DGZ		
6									SUPPORT
	5117 814AA	1	2, 6	L		EX8	DGZ		
		1	3, 7	L		EX8	DGZ		
7									BRACKET, Transmission Shifter
	5122 893AA	1	2, 6	L		EX8	DGZ		
		1	3, 7	L		EX8	DGZ		
8									BOLT, Hex Head
	5126 227AA	2	2, 6	L		EX8	DGZ		
		2	3, 7	L		EX8	DGZ		
9									U-NUT
	5125 859AA	10	2, 6	L		EX8	DGZ		
		10	3, 7	L		EX8	DGZ		
10									BRACKET, Gearshift
	5117 826AA	1	2, 6	L		EX8	DGZ		
		1	3, 7	L		EX8	DGZ		
11									BOLT, Hex Head
	5126 101AA	3	2, 6	L		EX8	DGZ		
		3	3, 7	L		EX8	DGZ		
12									CABLE, Gear Selector
	5104 039AA	1	2, 6	L		EX8	DGZ		
		1	3, 7	L		EX8	DGZ		
13									RETAINER, Transmission Control Shift
	5104 044AA	1	2, 6	L		EX8	DGZ		
		1	3, 7	L		EX8	DGZ		
14									COVER, Gearshift
	5104 041AA	1	2, 6	L		EX8	DGZ		

Refer to Model Legend Information Bookmark

Gear Shift Control [DGZ]
Figure NAG1-1210

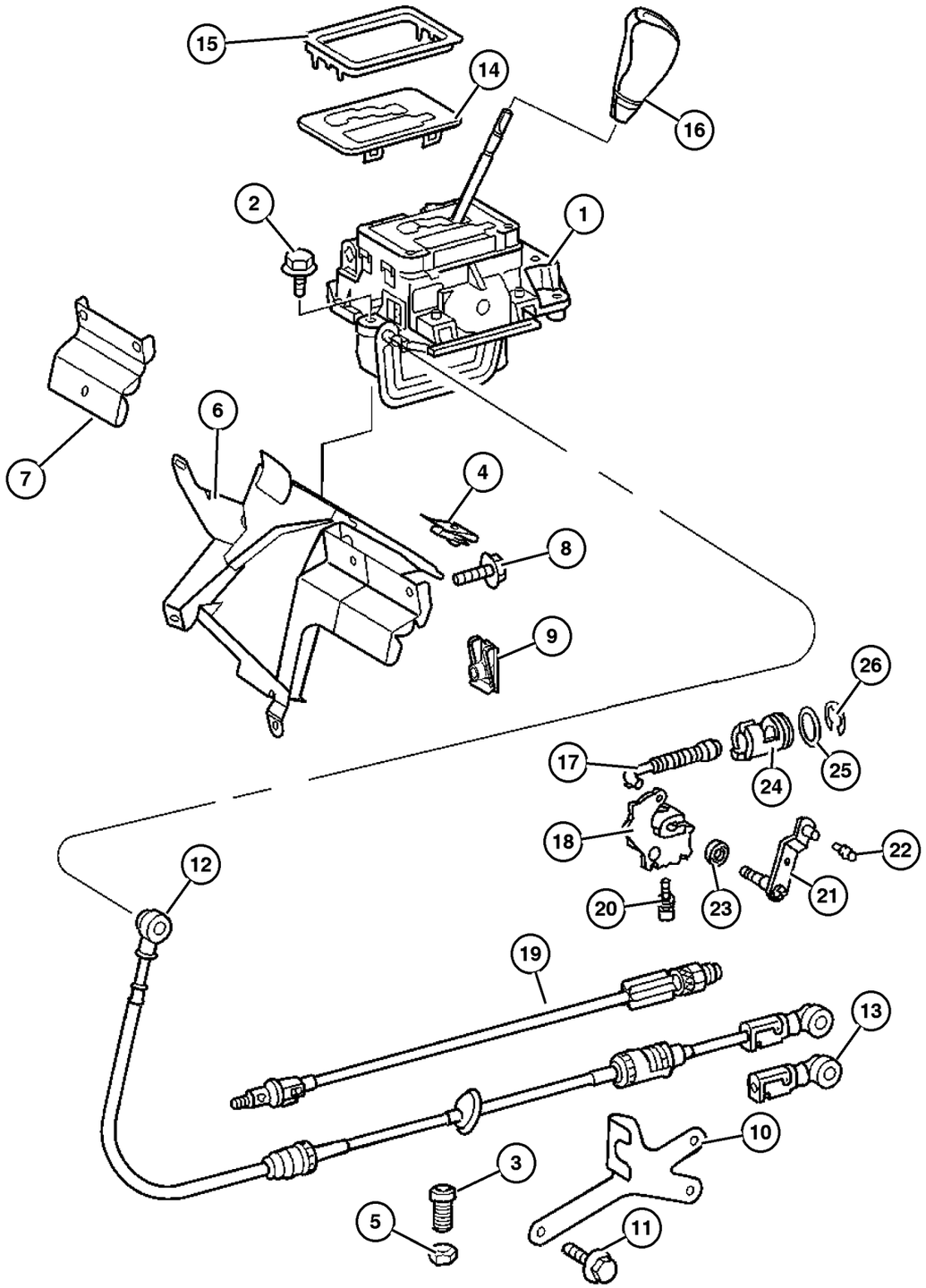

ITEM	PART NUMBER	QTY	LINE	SERIES	BODY	ENGINE	TRANS	TRIM	DESCRIPTION
		1	3, 7	L		EX8	DGZ		
15									TRIM, See Center Console, (NOT SERVICED) (Not Serviced)
16									KNOB, Gearshift
	5117 825AA	1	2, 6	L		EX8	DGZ		
		1	3, 7	L		EX8	DGZ		
17	52108 166AA	1	2, 3, 6, 7	L		EX8	DGZ		LINKAGE, Transmission
18	5099 886AA	1	2, 3, 6, 7	L		EX8	DGZ		DETENT, Gearshift
19									CABLE, Park Interlock
	5104 043AA	1	2, 6	L		EX8	DGZ		
		1	3, 7	L		EX8	DGZ		
20	52108 178AA	1	2, 3, 6, 7	L		EX8	DGZ		SCREW
21	5117 845AA	1	2, 3, 6, 7	L		EX8	DGZ		LEVER, Gearshift
22	5096 975AA	1	2, 3, 6, 7	L		EX8	DGZ		PIVOT
23	52108 170AA	1	2, 3, 6, 7	L		EX8	DGZ		SEAL, Transmission
24	52108 176AA	1	2, 3, 6, 7	L		EX8	DGZ		GUIDE
25	52108 177AA	1	2, 3, 6, 7	L		EX8	DGZ		SEAL, Transmission
26	52107 976AA	1	2, 3, 6, 7	L		EX8	DGZ		SNAP RING

Refer to Model Legend Information Bookmark

AR = Use as required - = Non illustrated part # = New this model year

March 3, 2006

RETURN TO GROUP INDEX

Group – 022
Wheels, Covers and Jacks

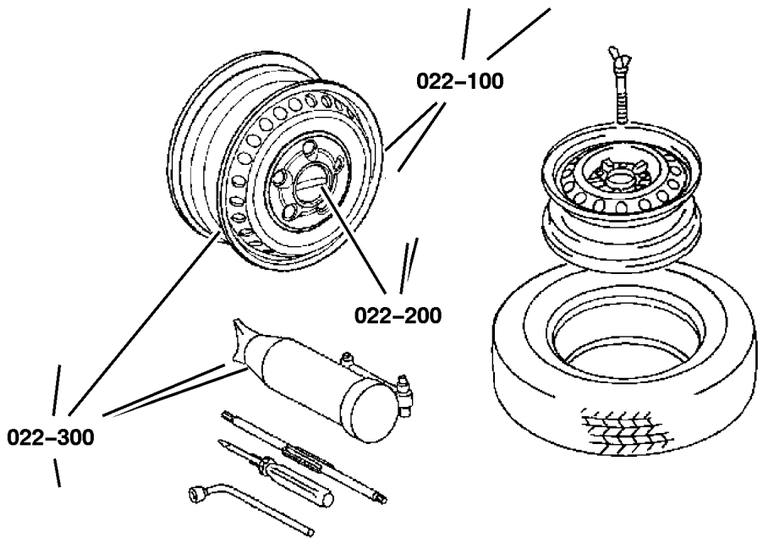

GROUP 22 - Wheels, Covers and Jacks

Illustration Title — Group-Fig. No.

Wheels and Hardware
Wheels and Hardware . . . . . Fig. 022-120

Jack Stowage
Jack and Stowage . . . . . Fig. 022-340

Spare Tire Stowage
Wheel, Spare . . . . . Fig. 022-430

022–100 Wheels and Hardware	022–300 Jack Stowage	022–400 Spare Tire Stowage	
	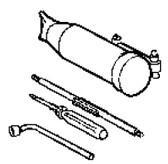		

Wheels and Hardware
Figure 022-120

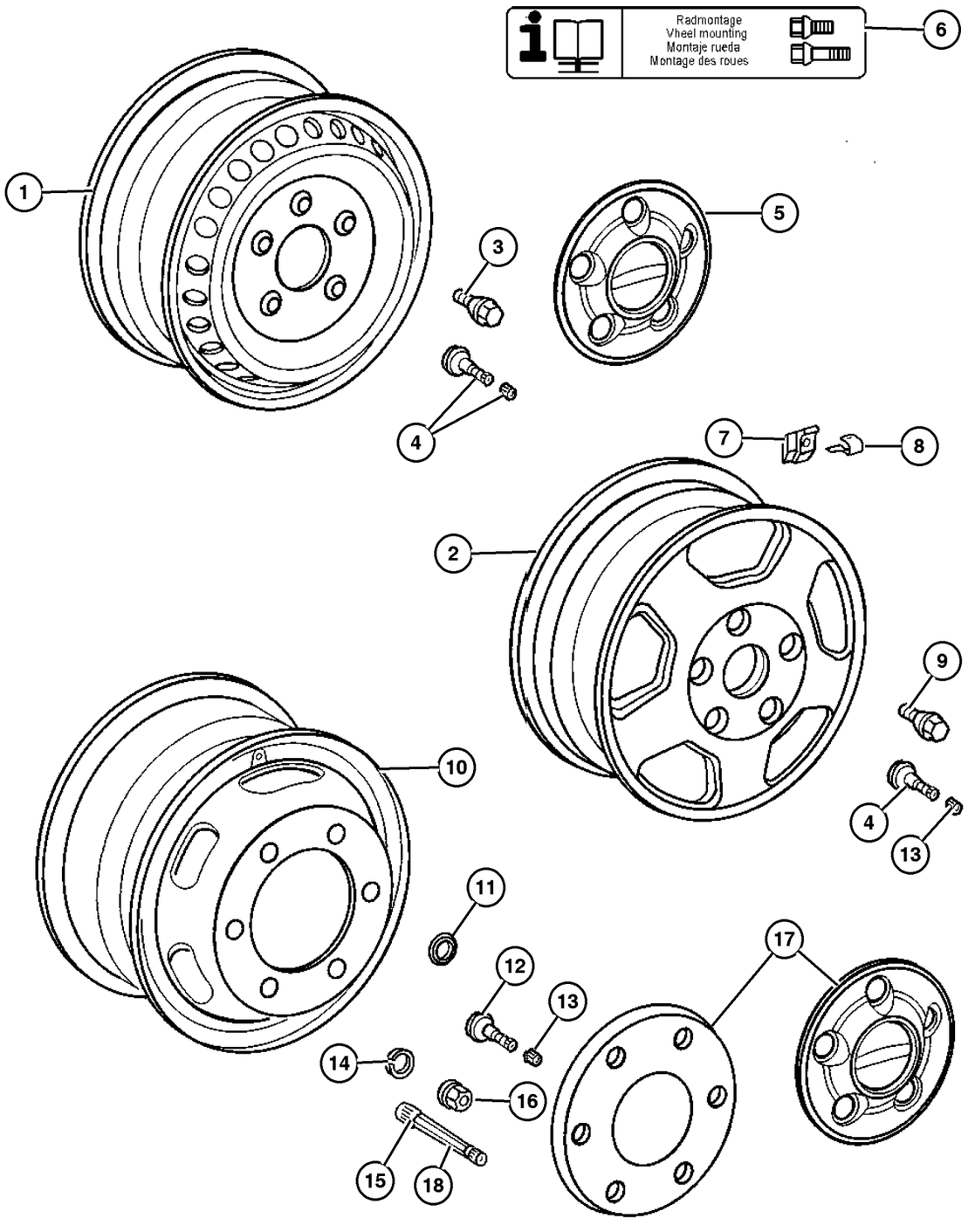

ITEM	PART NUMBER	QTY	LINE	SERIES	BODY	ENGINE	TRANS	TRIM	DESCRIPTION
NOTES: Sales Codes:									
[AMB] = United Parcel Service Group									
[AMC] = Federal Express Group									
[MGQ] = Freightliner Badge									
[MG4] = Dodge Badge									
[WCD] = 15x5.0 Steel Wheels									
[WCL] = 15x6.0 Steel Wheels									
[WDG] = 16x6.0 Steel Wheels									
[WLB] = Steel Spare Wheel									
[WWA] = Paintable Wheels									
[WWB] = 16x6x.0 Aluminum Wheels									
[WWW] = Steel Artic White Wheels									
[4DR] = Weight Variant 3.88T									
4JR] = Duel Rear Wheel Chassis with 16‘ Tire									
[4XS] = National Version for USA									
[4Z1] = National Verison for Canada									
1									WHEEL
	5103 605AA	2	2, 6	L	01, 02, 06				[WCL+WWW+(4Z1=4XS]
		2	2, 6	L	11, 12, 14, 15, 16				[WCL+WWW+(4Z1=4XS]
	5104 581AA	2	3, 7	L	02, 06				[WCD]
		2	3, 7	L	12, 15, 16				[WCD]
	5128 908AA	2	2, 6	L	01, 02, 06				[WDG+WWA+(4Z1=4XS]
		2	2, 6	L	11, 12, 14, 15, 16				[WDG+WWA+(4Z1=4XS]
	5128 911AA	2	2, 6	L	01, 02, 06				[WDG+(4Z1=4XS]
		2	2, 6	L	11, 12, 14, 15, 16				[WDG+(4Z1=4XS]
	5142 364AA	7	3, 7	L	02, 06				[WDG+4JR]
	5166 588AA	7	3, 7	L	02, 06				[WDG+4JR+WWA]
	52108 342AA	1	2, 3, 6, 7	L					
2									WHEEL, Aluminum
	5140 692AA	2	2, 6	L	11, 12, 14, 15, 16				[WDG+WWB+(4Z1=4XS]
		2	2, 6	L	11, 12, 14, 15, 16				[WWB+WDG+(4Z1=4XS]

Refer to Model Legend Information Bookmark

Wheels and Hardware
Figure 022-120

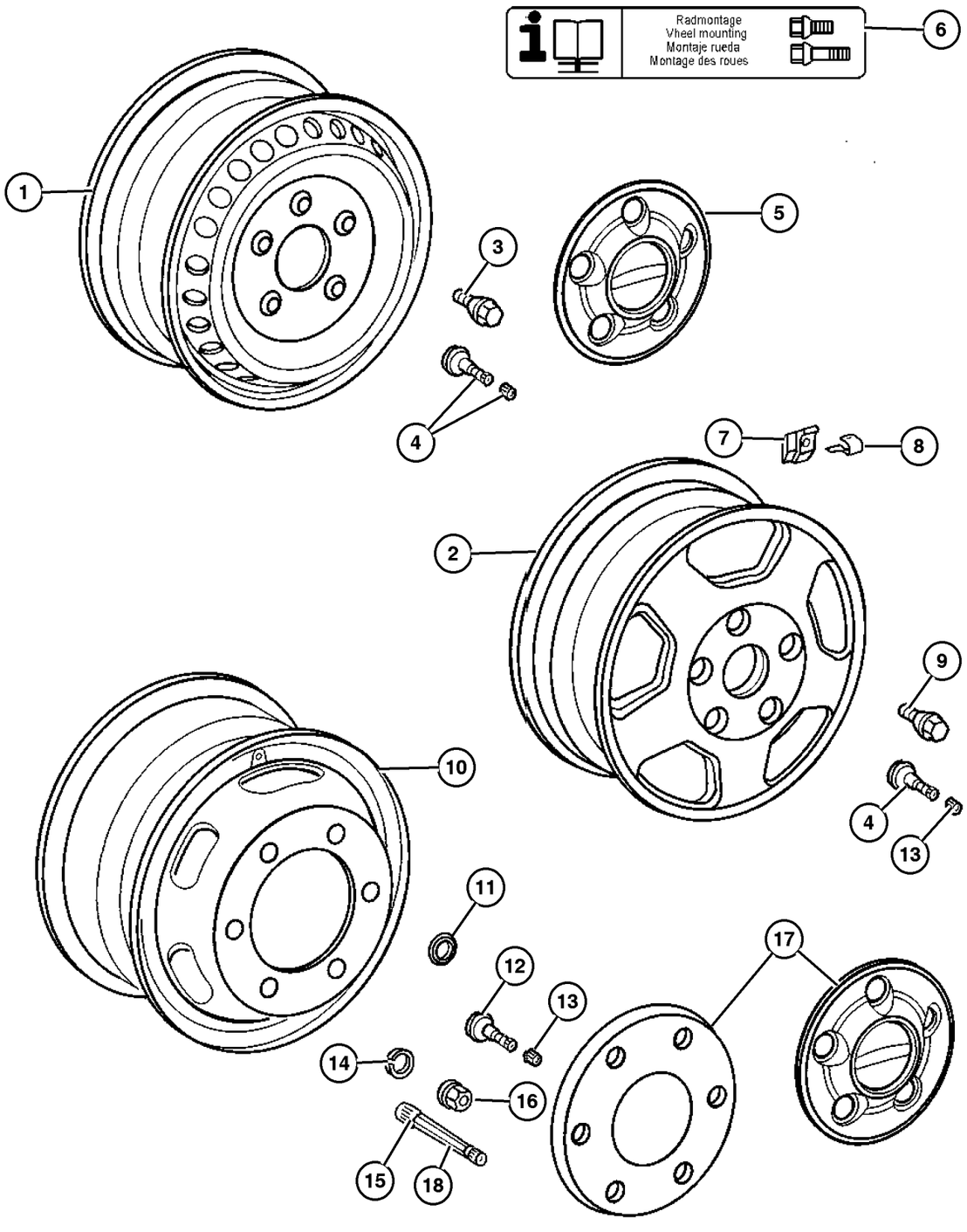

ITEM	PART NUMBER	QTY	LINE	SERIES	BODY	ENGINE	TRANS	TRIM	DESCRIPTION
3	5104 080AA	20	2, 6	L	01, 02, 06				BOLT, [WDG=WCL=WCL+WWW+AMC]
4	5175 254AA	99	2, 6	L	01, 02, 06				STEM, Wheel Valve
5									CAP, Wheel Center
	5104 571AA	4	6	L	01, 02, 06				[(WCL=WDG)+4XS+MGQ-(WWW=AMB)]
		4	6	L	11, 12, 14, 15, 16				[(WCL=WDG)+4XS+MGQ-(WWW=AMB)]
		4	6	L	51, 52, 54, 55, 56				[(WCL=WDG)+4XS+MGQ-(WWW=AMB)]
	5104 582AA	2	7	L	02, 06				[4XS+MGQ]
		2	7	L	12, 15, 16				[4XS+MGQ]
	5128 954AA	4	2	L	01, 02, 06				[(WCL=WDG)+4Z1=(4XS+MG4)-(WWW=AMB)]
		4	2	L	11, 12, 14, 15, 16				[(WCL=WDG)+4Z1=(4XS+MG4)-(WWW=AMB)]
		4	2	L	51, 52, 54, 55, 56				[(WCL=WDG)+4Z1=(4XS+MG4)-(WWW=AMB)]
6									LABEL
	5129 737AA	1	2, 6	L	01, 02, 06				[(WWB-4DR=WWB+4DR+WLB)-(WWA=4Z1)]
		1	2, 6	L	11, 12, 14, 15, 16				[(WWB-4DR=WWB+4DR+WLB)-(WWA=4Z1)]
		1	2, 6	L	51, 52, 54, 55, 56				[(WWB-4DR=WWB+4DR+WLB)-(WWA=4Z1)]
7									WEIGHT, Balance, Perf Part, (NOT SERVICED) (Not Serviced)
8									BRACKET, (NOT SERVICED) (Not Serviced)
9									BOLT
	5104 018AA	20	2, 6	L	01, 02, 06				[WWB=WWB+WDG]
		20	2, 6	L	11, 12, 14, 15, 16				[WWB=WWB+WDG]

Refer to Model Legend Information Bookmark

Wheels and Hardware
Figure 022-120

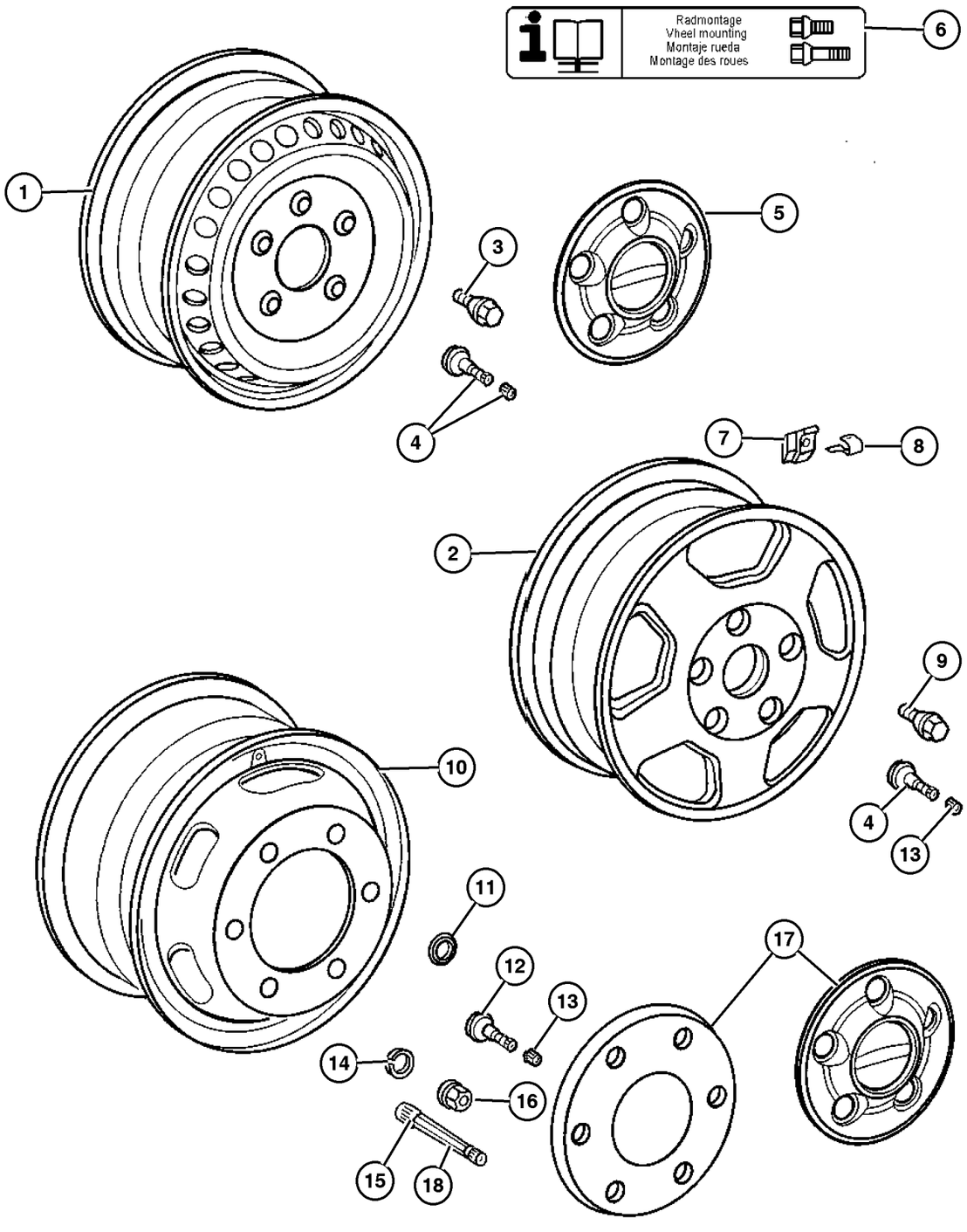

ITEM	PART NUMBER	QTY	LINE	SERIES	BODY	ENGINE	TRANS	TRIM	DESCRIPTION
		20	2, 6	L	51, 52, 54, 55, 56				[WWB=WWB+WDG]
10									WHEEL
	5104 581AA	1	3, 7	L	02, 06				[WCD+WLB], Spare
		1	3, 7	L	12, 15, 16				[WCD+WLB], Spare
11									WASHER
	5103 941AA	12	3, 7	L	02, 06				
		12	3, 7	L	12, 15, 16				
12									STEM, Wheel Valve
	5103 628AA	99	3, 7	L	02, 06				
		99	3, 7	L	12, 15, 16				
13									CAP, valve stem
	5104 630AA	99	2, 6	L	01, 02, 06				
		99	2, 6	L	11, 12, 14, 15, 16				
		99	3, 7	L	02, 06				
		99	3, 7	L	12, 15, 16				
14									WASHER, Lock
	5104 538AA	12	3, 7	L	02, 06				
		12	3, 7	L	12, 15, 16				
15									STEM, Wheel Valve
	5118 963AA	2	3, 7	L	02, 06				[-(4JR+WDG)]
		2	3, 7	L	12, 15, 16				
16									NUT
	5104 651AA	12	3, 7	L	02, 06				
		12	3, 7	L	12, 15, 16				
17									COVER, Wheel
	5104 570AA	4	2, 6	L	01, 02, 06				[(WDG+WWB)+(4Z!=4XS) +(MG4=MGQ)]
		4	2, 6	L	11, 12, 14, 15, 16				[(WDG+WWB)+(4Z!=4XS) +(MG4=MGQ)]
		4	2, 6	L	51, 52, 54, 55, 56				[(WDG+WWB)+(4Z!=4XS) +(MG4=MGQ)]

Refer to Model Legend Information Bookmark

Wheels and Hardware
Figure 022-120

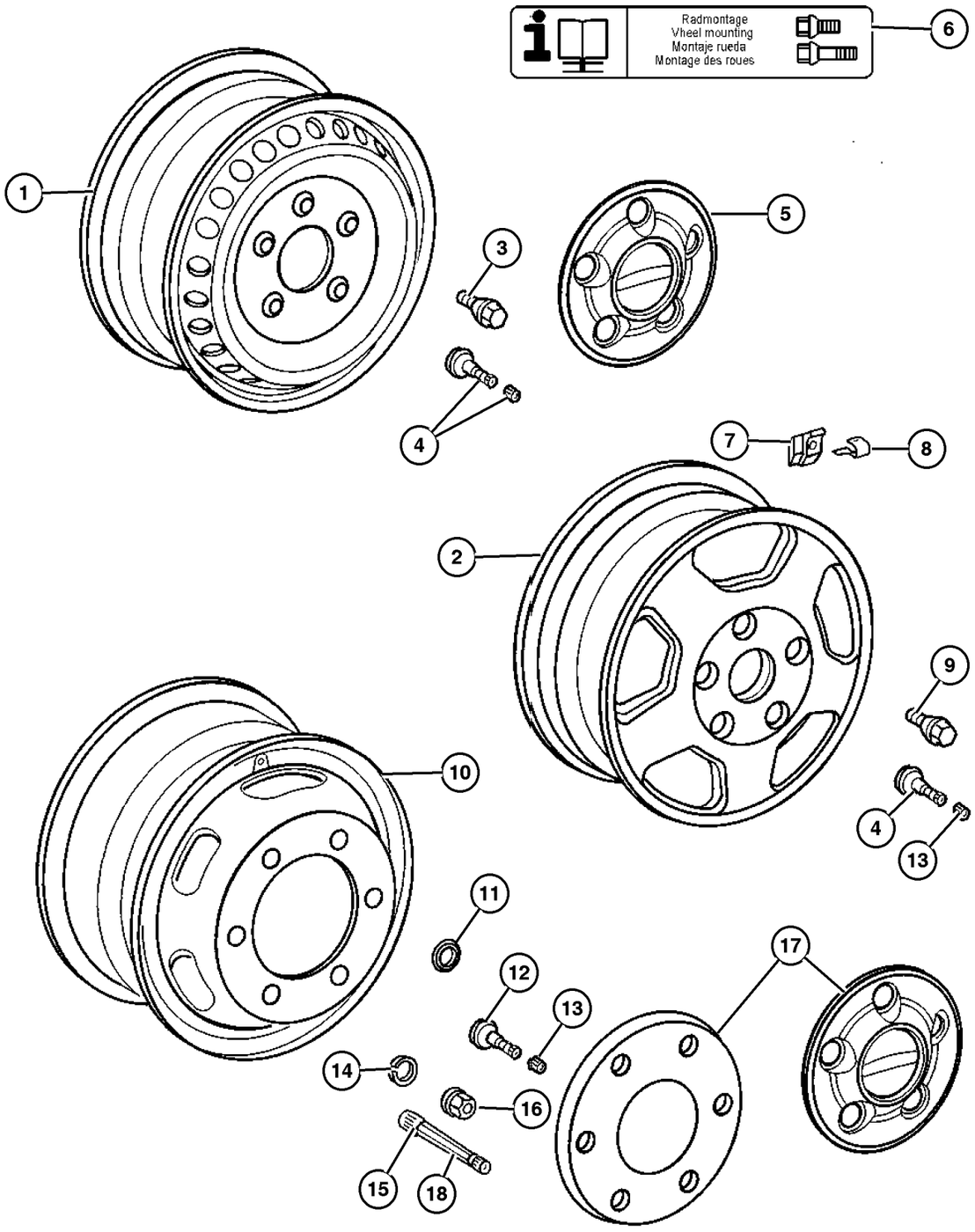

ITEM	PART NUMBER	QTY	LINE	SERIES	BODY	ENGINE	TRANS	TRIM	DESCRIPTION
	5114 454AA	2	3	L	02, 06				[(4Z1=4XS)+MG4-AMB]
		2	3	L	12, 15, 16				[(4Z1=4XS)+MG4-AMB]
18	5166 591AA	2	3, 7	L	02, 06				STEM, Wheel Valve, Extension, [4JR+WDG]

Refer to Model Legend Information Bookmark

AR = Use as required - = Non illustrated part # = New this model year

March 3, 2006

« RETURN TO GROUP INDEX

Jack and Stowage
Figure 022-340

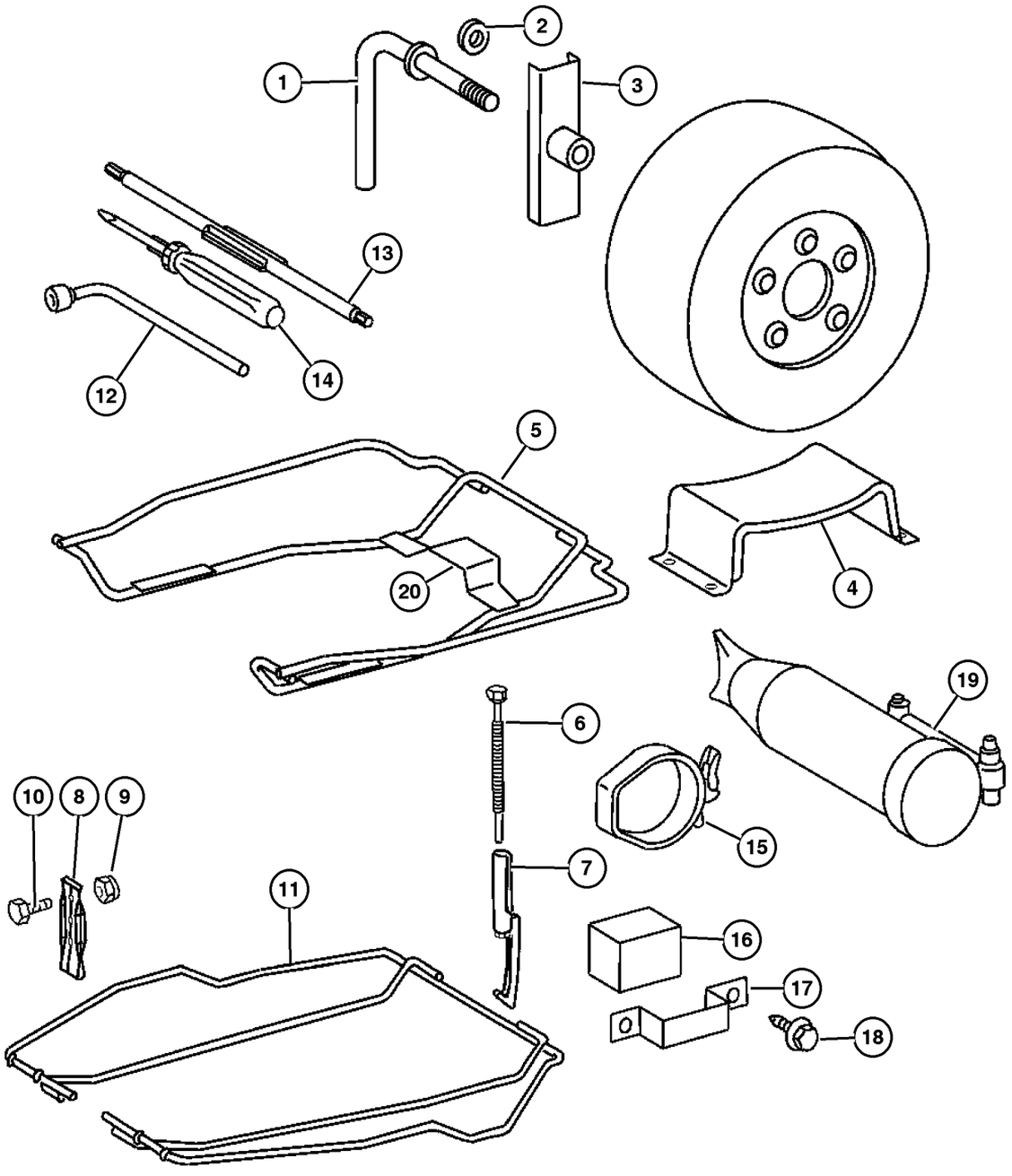

ITEM	PART NUMBER	QTY	LINE	SERIES	BODY	ENGINE	TRANS	TRIM	DESCRIPTION
NOTES: Sales Codes:									
[CFY] = 2 Rear Bench 2 Passenger Seat									
[TBN] = Underslung Tire Carrier									
[TNH] = P195/70R15 BSW All Season Tire									
[WDG] = 16x6 Steel Wheels									
[XEG] = Hydraulic Jack									
[XFQ] = Delete Hydraulic Jack									
[XL8] = Delete Tool Kit									
[4JR] = Dual Rear Wheel Chassic with 16‘ Tire									
[5AE] = 140‘ Wheelbase									
[5AF] = 158‘ Wheelbase									
1	5104 529AA	1	2, 6	L	11, 12, 14, 15, 16				SCREW
2									WASHER, Flat
	5126 189AA	4	2, 6	L	11, 12, 14, 15, 16				[CFY]
		4	2, 6	L	51, 52, 54, 55, 56				[CFY]
		4	3, 7	L	12, 15, 16				[CFY]
3	5104 528AA	1	2, 6	L	11, 12, 14, 15, 16				BRACKET, Spare Tire Winch
4									REST, Spare Tire
	5121 441AA	1	2, 6	L	11, 12, 14, 15, 16				
		1	3, 7	L	12, 15, 16				
5									SUPPORT, Spare Tire
	5104 078AA	1	2, 6	L	11, 12, 14, 15, 16				[TBN+WDG]
		1	2, 6	L	51, 52, 54, 55, 56				[TBN+WDG]
		1	3, 7	L	02, 06				[TBN+4JR]
6									SCREW, Spare Tire
	5104 082AA	2	2, 6	L	11, 12, 14, 15, 16				[4E9+TUG+TBN]

Refer to Model Legend Information Bookmark

Jack and Stowage
Figure 022-340

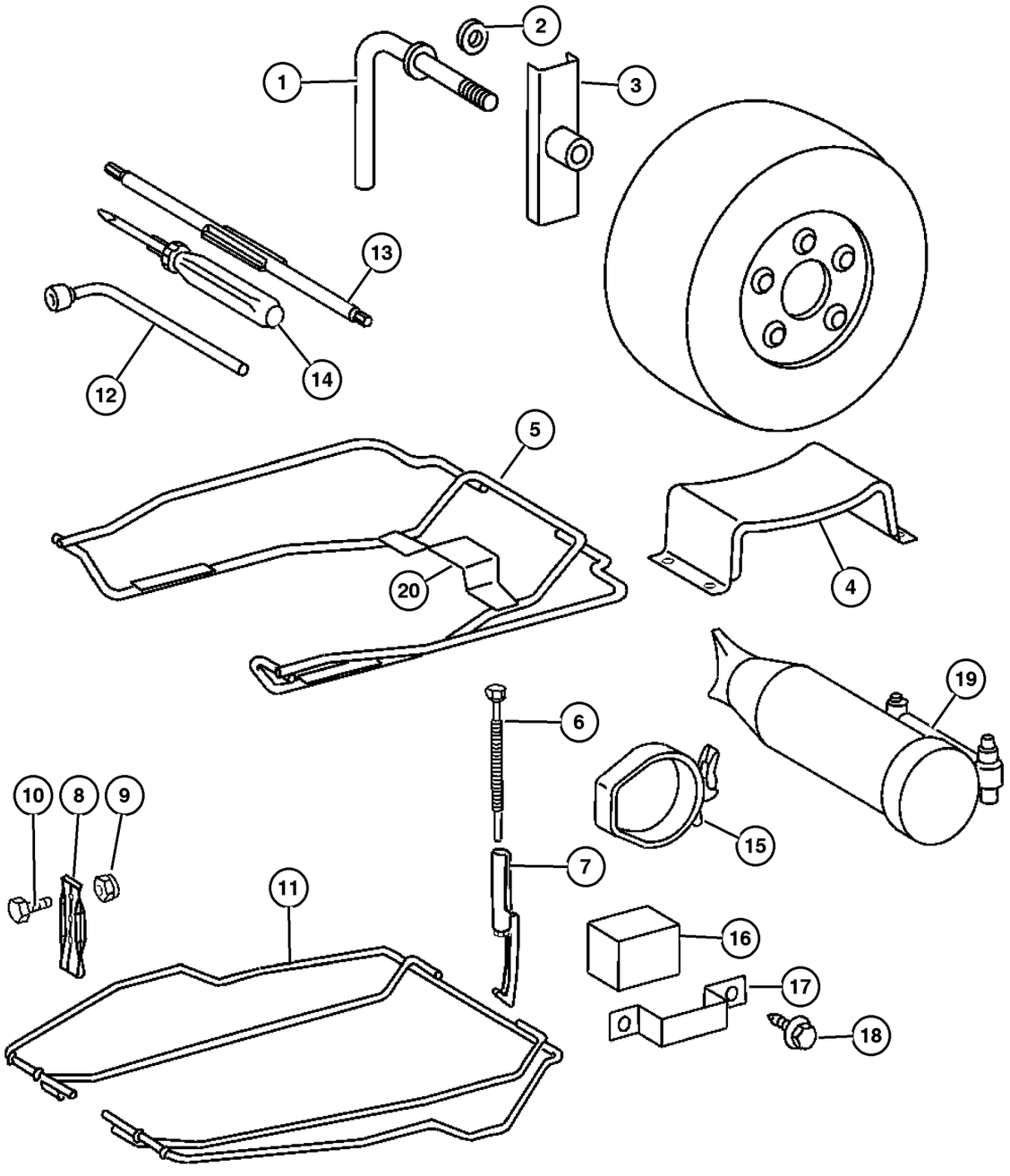

ITEM	PART NUMBER	QTY	LINE	SERIES	BODY	ENGINE	TRANS	TRIM	DESCRIPTION
		2	2, 6	L	51, 52, 54, 55, 56				[4E9+TUG+TBN]
7	5118 920AA	2	2, 6	L	11, 12, 14, 15, 16				HOOK, Spare Tire Attach [TNH+TBN]
		2	2, 6	L	51, 52, 54, 55, 56				[TNH+TBN]
		2	3, 7	L	16				[5AF+TBN]
8	5104 081AA	2	2, 6	L	01, 02, 06				PLATE, Spare Tire [TBN+WDG]
		2	2, 6	L	11, 12, 14, 15, 16				[TBN+WDG]
		2	2, 6	L	51, 52, 54, 55, 56				[TBN+WDG]
	5119 009AA	2	3, 7	L	02, 06				[TBN]
		2	3, 7	L	12, 15, 16				[TBN]
9	5126 237AA	4	2, 6	L	01, 02, 06				NUT, Hex [TBN+WDG]
		4	2, 6	L	11, 12, 14, 15, 16				[TBN+WDG]
		4	2, 6	L	51, 52, 54, 55, 56				[TBN+WDG]
		2	3, 7	L	02, 06				[TBN]
		2	3, 7	L	12, 15, 16				[TBN]
10	5104 655AA	4	2, 6	L	01, 02, 06				BOLT [TBN+WDG]
		4	2, 6	L	11, 12, 14, 15, 16				[TBN+WDG]
		4	2, 6	L	51, 52, 54, 55, 56				[TBN+WDG]
		2	3, 7	L	02, 06				[TBN]

Refer to Model Legend Information Bookmark

Jack and Stowage
Figure 022-340

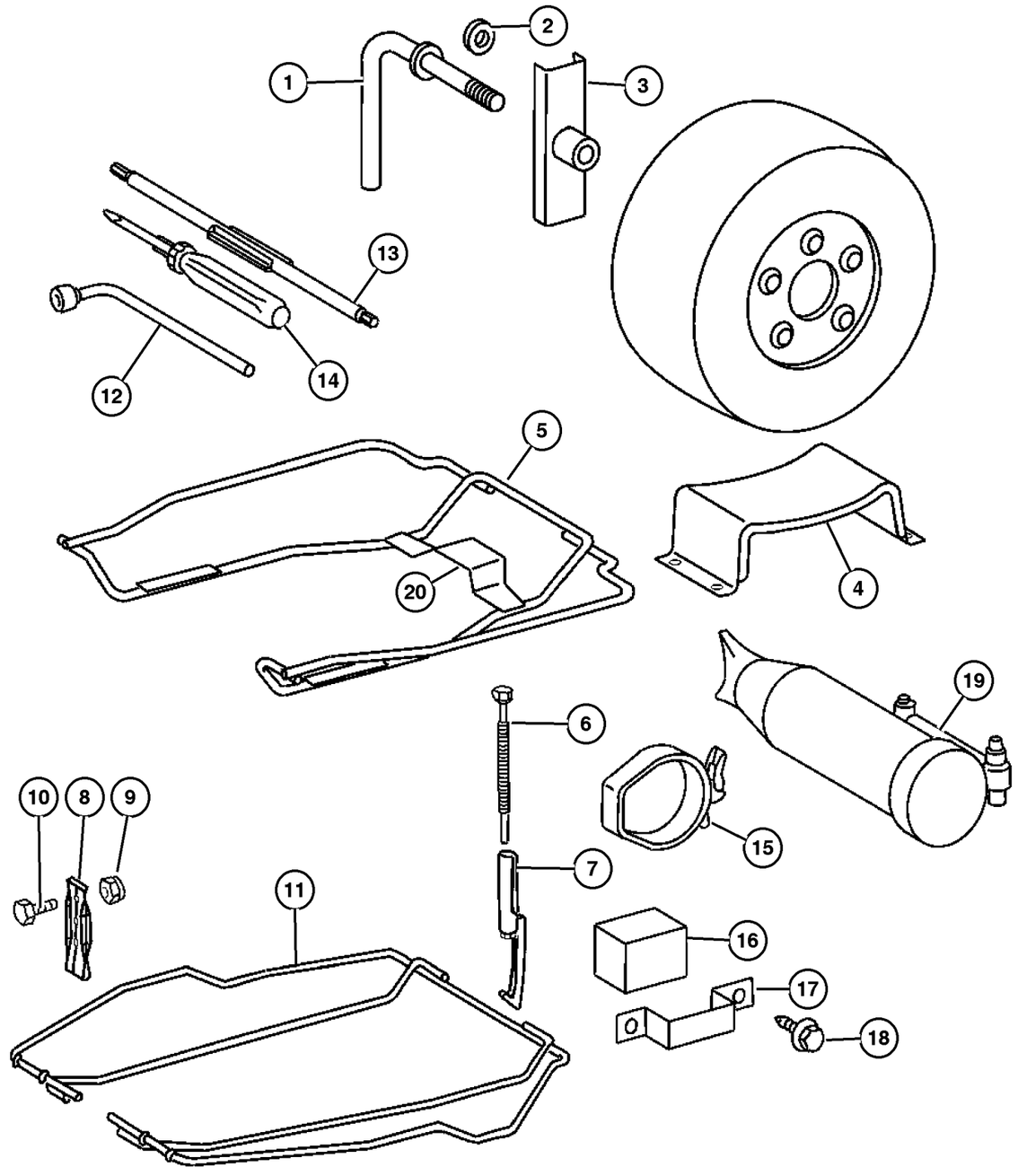

ITEM	PART NUMBER	QTY	LINE	SERIES	BODY	ENGINE	TRANS	TRIM	DESCRIPTION
		2	3, 7	L	12, 15, 16				[TBN]
11									SUPPORT, Spare Tire
	5104 077AA	1	2, 6	L	01, 02, 06				[TBN]
		1	2, 6	L	11, 12, 14, 15, 16				[TBN]
		1	2, 6	L	51, 52, 54, 55, 56				[TBN]
	5104 078AA	1	3, 7	L	02, 06				[4E9+TUG+TBN]
12									TOOL, Wrench
	5120 992AA	1	2, 6	L	01, 02, 06				[4E9=(XEG=XFQ)-XL8]
		1	2, 6	L	11, 12, 14, 15, 16				[4E9=(XEG=XFQ)-XL8]
		1	2, 6	L	51, 52, 54, 55, 56				[4E9=(XEG=XFQ)-XL8]
13									TUBE, Spare Tire Winch
	5120 994AA	1	2, 6	L	01, 02, 06				[-XL8]
		1	2, 6	L	11, 12, 14, 15, 16				[-XL8]
		1	2, 6	L	51, 52, 54, 55, 56				[-XL8]
		1	3, 7	L	02, 06				[XEG+XFQ]
		1	3, 7	L	12, 15, 16				[XEG+XFQ]
14									SCREWDRIVER, (NOT SERVICED) (Not Serviced)
15									BRACKET, Jack
	5125 275AA	1	2, 6	L	01, 02, 06				[4E9+XEG]
		1	2, 6	L	11, 12, 14, 15, 16				[4E9+XEG]
		1	2, 6	L	51, 52, 54, 55, 56				[4E9+XEG]
16									PAD, Jack

Refer to Model Legend Information Bookmark

AR = Use as required - = Non illustrated part # = New this model year

March 3, 2006

« RETURN TO GROUP INDEX

Jack and Stowage
Figure 022-340

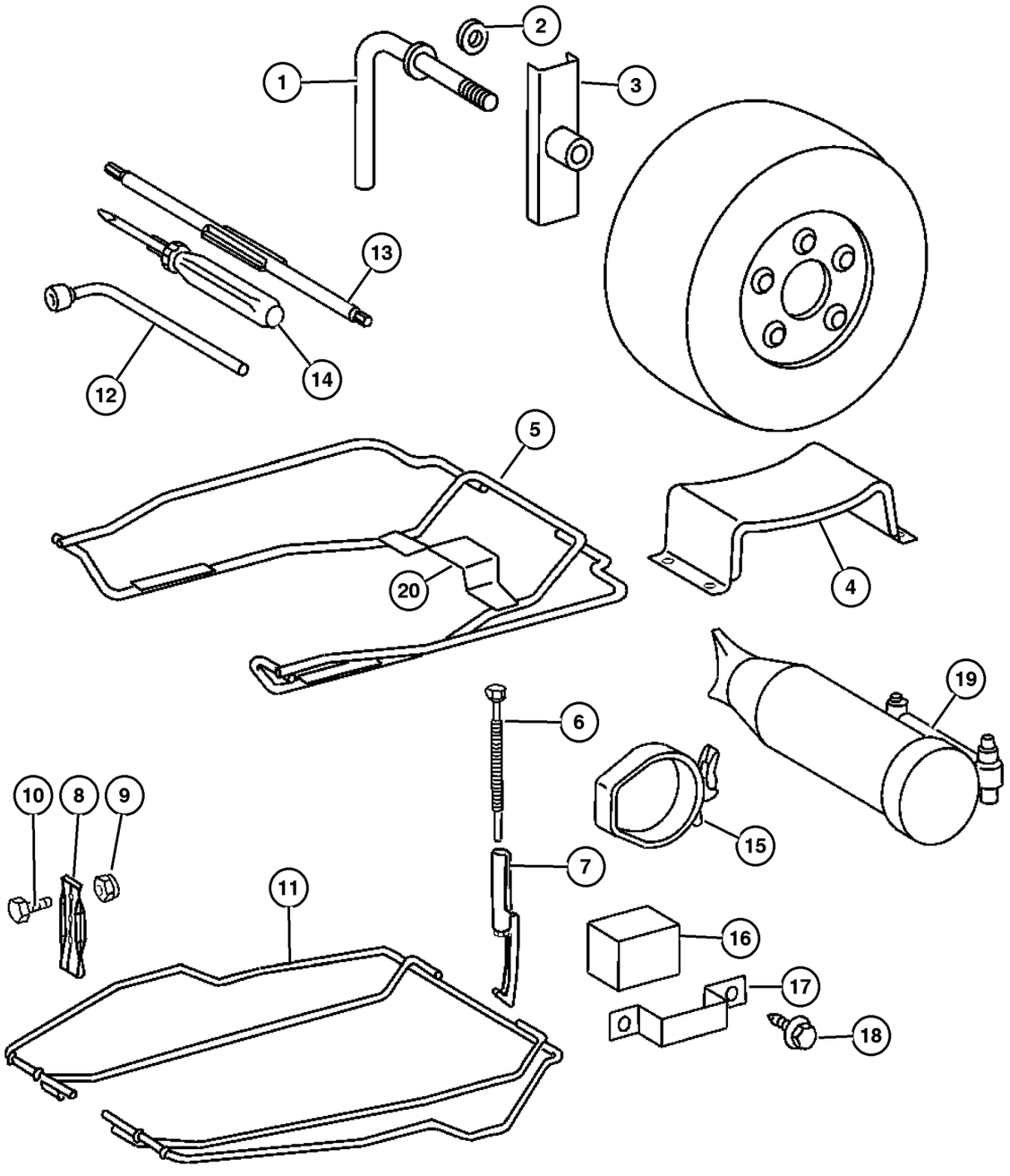

ITEM	PART NUMBER	QTY	LINE	SERIES	BODY	ENGINE	TRANS	TRIM	DESCRIPTION
	5133 292AA	1	2, 6	L	01, 02, 06				
		1	2, 6	L	11, 12, 14, 15, 16				
		1	2, 6	L	51, 52, 54, 55, 56				
		1	3, 7	L	02, 06				
		1	3, 7	L	12, 15, 16				
17									BRACKET, Jack
	5133 293AA	1	2, 6	L	01, 02, 06				
		1	2, 6	L	11, 12, 14, 15, 16				
		1	2, 6	L	51, 52, 54, 55, 56				
		1	3, 7	L	02, 06				
		1	3, 7	L	12, 15, 16				
18									SCREW, Self-Tapping
	5133 295AA	2	2, 6	L	11, 12, 14, 15, 16				
		2	2, 6	L	51, 52, 54, 55, 56				
		2	3, 7	L	12, 15, 16				
19									JACK
	5104 587AA	1	2, 6	L	01, 02, 06				[4E9+XEG]
		1	2, 6	L	11, 12, 14, 15, 16				[4E9+XEG]
		1	2, 6	L	51, 52, 54, 55, 56				[4E9+XEG-(XFQ=XL8)]
		1	3, 7	L	02, 06				[XEG]
		1	3, 7	L	12, 15, 16				[XEG]
20	5140 580AA	1	3, 7	L	06				BRACKET, Spare Tire, [5AF+TBN+4JR]

Refer to Model Legend Information Bookmark

Wheel, Spare
Figure 022-430

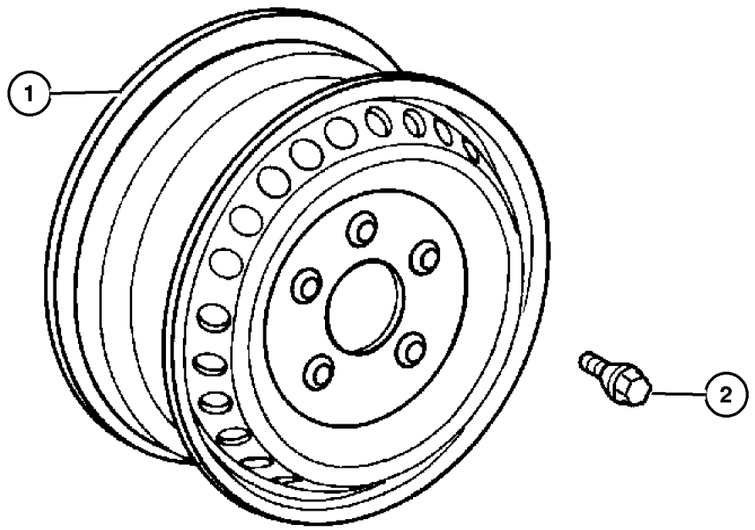

ITEM	PART NUMBER	QTY	LINE	SERIES	BODY	ENGINE	TRANS	TRIM	DESCRIPTION
NOTES: Sales Codes									
[AMC] = Federal Express Group									
[WCL] = 15X6 Steel Wheels									
[WDG] = 16X6 Steel Wheels									
[WLB] = Steel Spare Wheel									
[WWA] = Paintable Wheels									
[WWW] = Steel Arctic White Wheels									
[4JR] = Dual Rear Wheel Chassis with 16‘ Tire									
4XS] = National Version for USA									
[4Z1] = National Version for Canada									
1									WHEEL
	5103 605AA	2	2, 6	L	01, 02, 06				[WCL+WWW+(4Z1=4XS}]
	5104 581AA	1	3, 7	L	02, 06				[WCD+WLB]
		1	3, 7	L	12, 15, 16				[WCD+WLB]
	5128 908AA	2	2, 6	L	01, 02, 06				[WDG+WWA+(4Z1=4XS)]
		2	2, 6	L	11, 12, 14, 15, 16				[WDG+WWA+(4Z1=4XS)]
	5128 911AA	2	2, 6	L	01, 02, 06				[WDG+(4Z1=4XS)]
		2	2, 6	L	11, 12, 14, 15, 16				[WDG+(4Z1=4XS)]
	5142 364AA	7	3, 7	L	02, 06				[WDG+4JR]
	5166 588AA	2	3, 7	L	02, 06				[WDG+4JR+WWA]
2									BOLT
	5104 080AA	20	2, 6	L	01, 02, 06				[WDG=WCL=WCL+WWW+AMC]
		20	2, 6	L	11, 12, 14, 15, 16				[WDG=WCL=WCL+WWW+AMC]
		20	2, 6	L	51, 52, 54, 55, 56				[WDG=WCL=WCL+WWW+AMC]

Refer to Model Legend Information Bookmark

Group – 23D

Wiper/Lock Cylinder and Keys

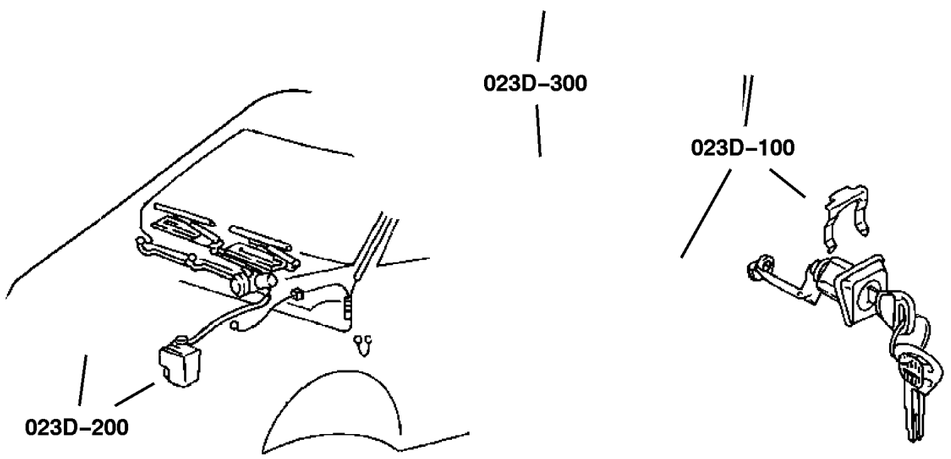

23D–100 **Lock Cylinders and Keys** 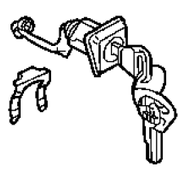	**23D–200** **Windshield Wiper and Washer Systems** 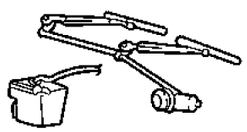		

GROUP 23D - Wiper/Lock Cylinder and Keys

Illustration Title	Group-Fig. No.
Lock Cylinders and Keys	
Lock Cylinders & Components	Fig. 23D-105
Windshield Wiper and Washer Systems	
Windshield Wiper & Washer	Fig. 23D-205

Lock Cylinders & Components
Figure 23D-105

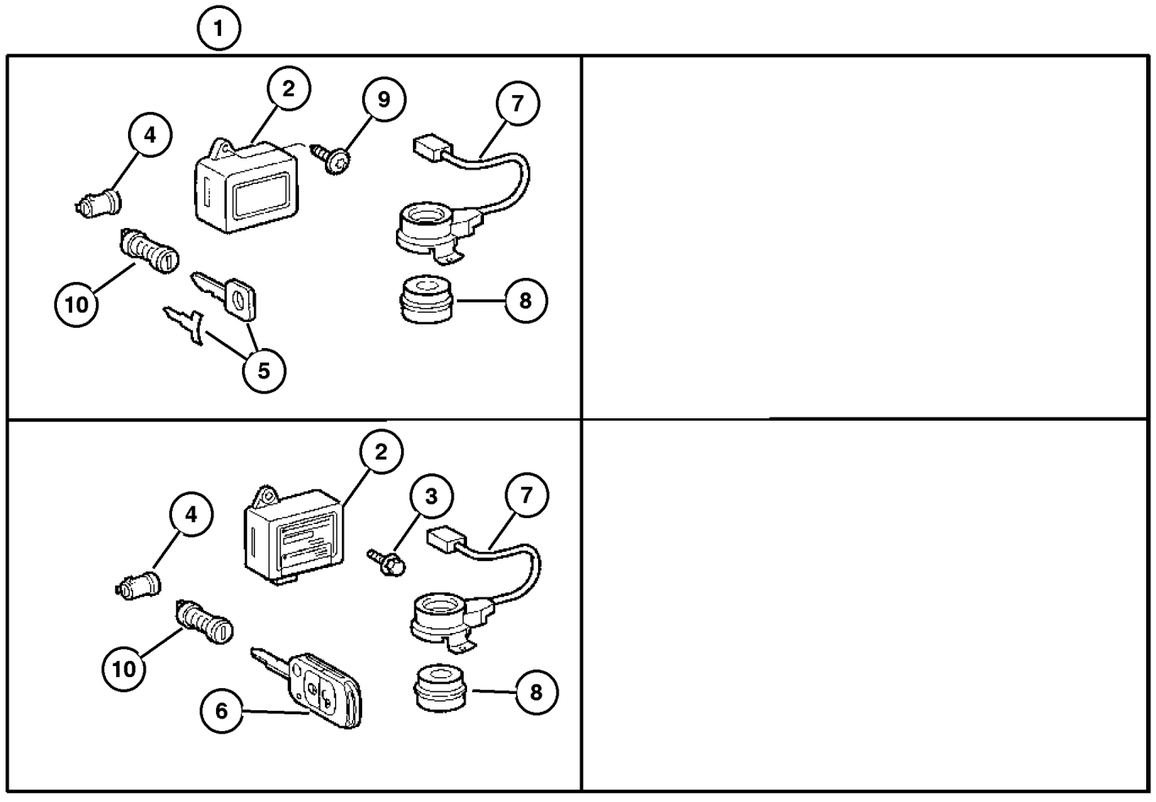

ITEM	PART NUMBER	QTY	LINE	SERIES	BODY	ENGINE	TRANS	TRIM	DESCRIPTION
1									LOCK, Door, For this package call 866 769 8092 or use STAR Parts Web Site order form
	5123 717AA	1	2, 6		11, 12, 14, 15, 16				
		1	2, 6		51, 52, 54, 55, 56				
2									WSP CONTROL UNIT, Remote Control Key
	5135 344AA	1	2, 6		11, 12, 14, 15, 16				UPS Sprinter w/o Transmitter
		1	2, 6		51, 52, 54, 55, 56				UPS Sprinter w/o Transmitter
	5135 345AA	1	2, 6		11, 12, 14, 15, 16				
		1	2, 6		51, 52, 54, 55, 56				
3									BOLT, Door
	5126 268AA	2	2, 6		11, 12, 14, 15, 16				
		2	2, 6		51, 52, 54, 55, 56				
		2	3, 7		02, 06				
		2	3, 7		12, 15, 16				
4									CYLINDER, Ignition Lock
	5114 365AA	1	2, 6		11, 12, 14, 15, 16				
		1	2, 6		51, 52, 54, 55, 56				
		1	2, 6		01, 02, 06				
5									KEY

Refer to Model Legend Information Bookmark

AR = Use as required - = Non illustrated part # = New this model year

March 3, 2006

« RETURN TO GROUP INDEX

»

Lock Cylinders & Components
Figure 23D-105

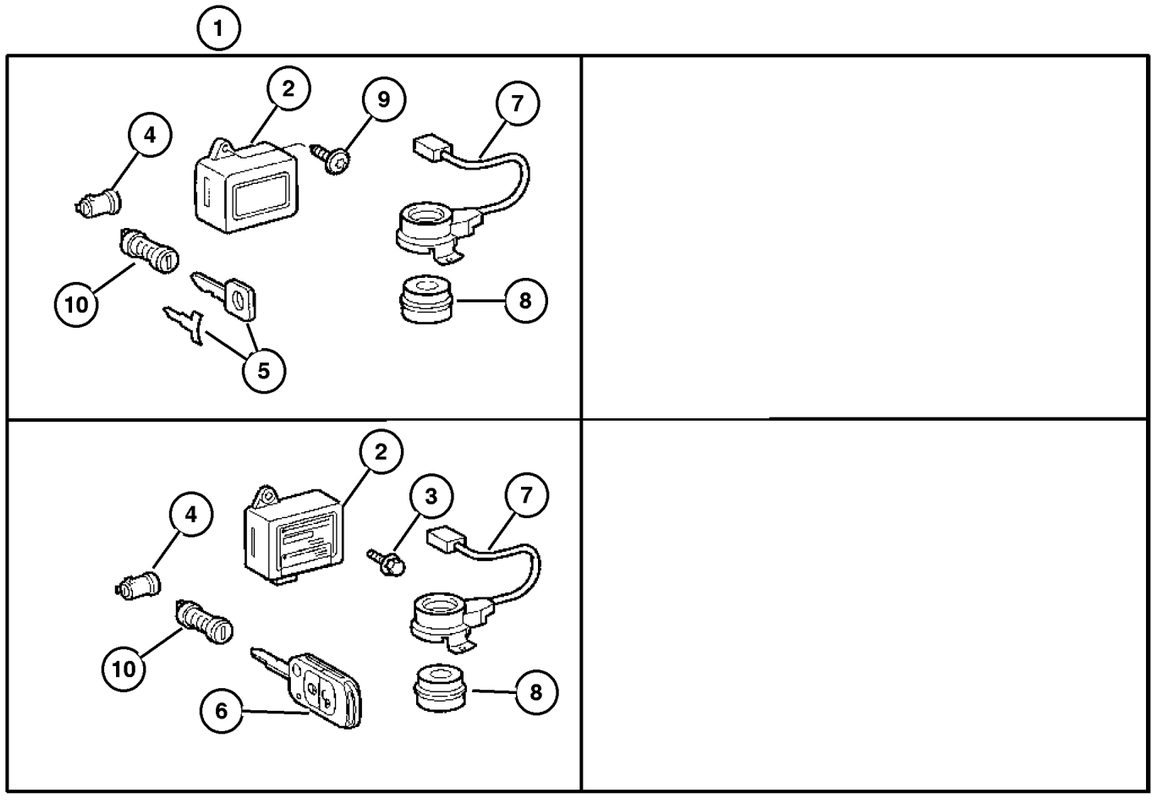

ITEM	PART NUMBER	QTY	LINE	SERIES	BODY	ENGINE	TRANS	TRIM	DESCRIPTION
	5114 363AA	1	2, 6		11, 12, 14, 15, 16				Key With No Remote WithOut Sales Code [GXY] Or [JPB]. Can Be Used As A Spare For Sales Code [JPB]
		1	2, 6		51, 52, 54, 55, 56				Key With No Remote WithOut Sales Code [GXY] Or [JPB]. Can Be Used As A Spare For Sales Code [JPB]
		1	3, 7		02, 06				Key With No Remote WithOut Sales Code [GXY] Or [JPB]. Can Be Used As A Spare For Sales Code [JPB]
		1	3, 7		12, 15, 16				Key With No Remote WithOut Sales Code [GXY] Or [JPB]. Can Be Used As A Spare For Sales Code [JPB]
	5114 362AA	2	3, 7		12, 15, 16				Remote Key With Blade For Sales Code [JPB] Only
		2	2, 6		01, 02, 06				Remote Key With Blade For Sales Code [JPB] Only
		2	3, 7		02, 06				Remote Key With Blade For Sales Code [JPB] Only
6									KEY, Remote Control Complete
	5114 361AA	4	2, 6		11, 12, 14, 15, 16				Remote Key With Blade For Sales Code [JPB] Only
		4	2, 6		51, 52, 54, 55, 56				Remote Key With Blade For Sales Code [JPB] Only
		2	3, 7		02, 06				Remote Key With Blade For Sales Code [JPB] Only
		2	3, 7		12, 15, 16				Remote Key With Blade For Sales Code [JPB] Only
7									TRANSPONDER, Steering Wheel
	5120 812AA	1	2, 6		11, 12, 14, 15, 16				
		1	2, 6		51, 52, 54, 55, 56				
		1	3, 7		02, 06				
8									RING
	5103 651AA	1	2, 6		11, 12, 14, 15, 16				

Refer to Model Legend Information Bookmark

AR = Use as required - = Non illustrated part # = New this model year

March 3, 2006

Lock Cylinders & Components
Figure 23D-105

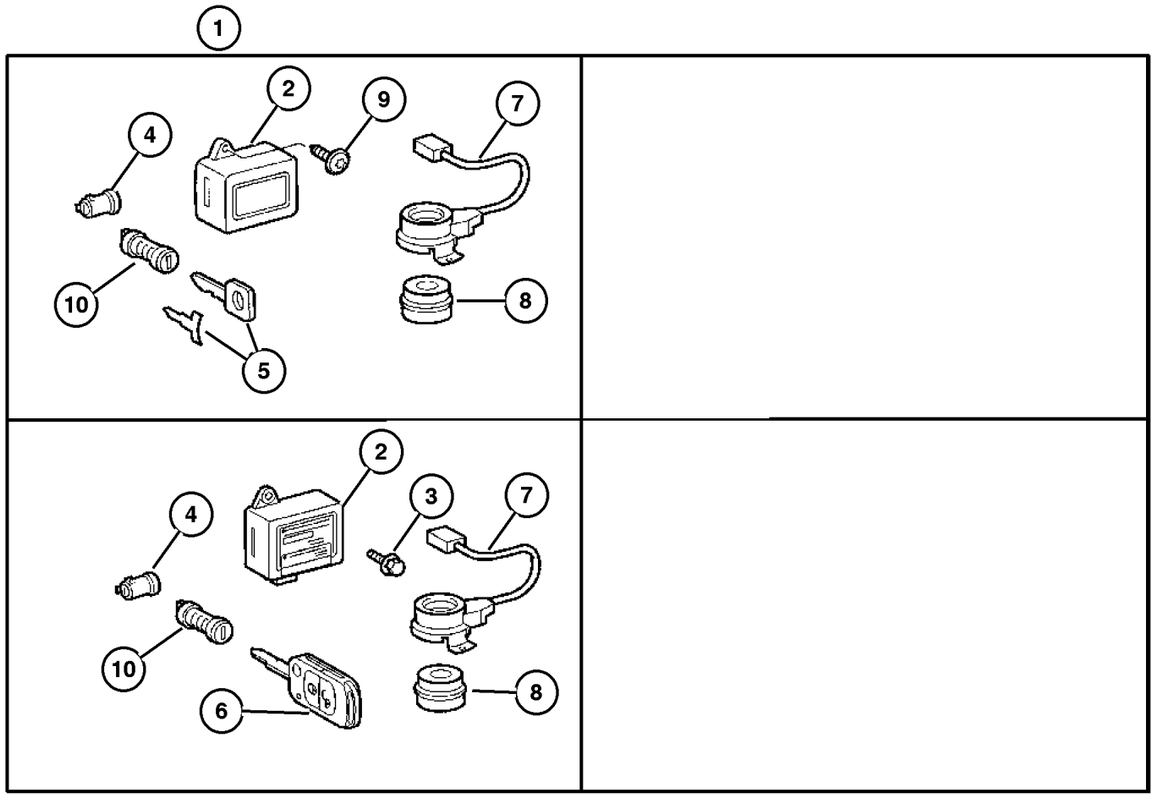

ITEM	PART NUMBER	QTY	LINE	SERIES	BODY	ENGINE	TRANS	TRIM	DESCRIPTION
		1	2, 6		51, 52, 54, 55, 56				
		1	3, 7		02, 06				
9									SCREW, Tapping
	5126 095AA	1	2, 6		51, 52, 54, 55, 56				
		6	2, 6		11, 12, 14, 15, 16				
		1	3, 7		02, 06				
10									CYLINDER, Door Lock
	5114 364AA	1	2, 6		11, 12, 14, 15, 16				
		1	3, 7		02, 06				
-11	5127 746AA-	1							KEY, Blank, For Ups Vechiles Only

Refer to Model Legend Information Bookmark

Windshield Wiper & Washer
Figure 23D-205

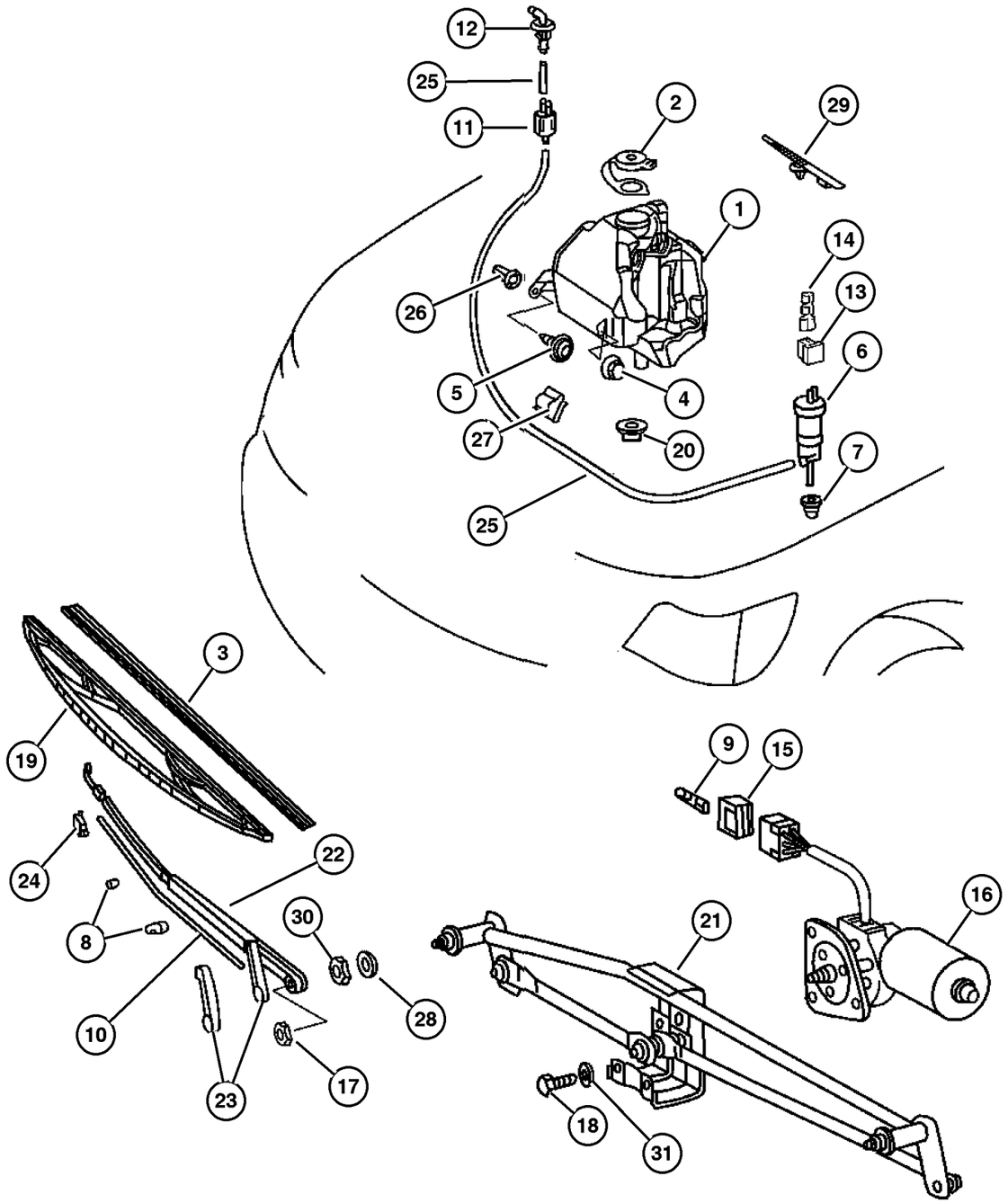

ITEM	PART NUMBER	QTY	LINE	SERIES	BODY	ENGINE	TRANS	TRIM	DESCRIPTION
1									RESERVOIR, Washer
	5104 503AA	1	2, 6		01, 02, 06				
		1	2, 6		11, 12, 14, 15, 16				
		1	2, 6		51, 52, 54, 55, 56				
		1	3, 7		02, 06				
		1	3, 7		12, 15, 16				
2									CAP, Washer Reservoir
	5125 059AA	1	2, 6		01, 02, 06				
		1	2, 6		11, 12, 14, 15, 16				
		1	2, 6		51, 52, 54, 55, 56				
		1	3, 7		02, 06				
		1	3, 7		12, 15, 16				
3									REFILL, Wiper Blade
	5133 992AA	2	2, 6		01, 02, 06				
		2	2, 6		11, 12, 14, 15, 16				
		2	2, 6		51, 52, 54, 55, 56				
		2	3, 7		02, 06				
		2	3, 7		12, 15, 16				
4									NUT, Hex, M6
	5096 978AA	1	2, 6		01, 02, 06				
		1	3, 7		02, 06				
5									SCREW
	5135 134AA	2	2, 6		11, 12, 14, 15, 16				

Refer to Model Legend Information Bookmark

Windshield Wiper & Washer
Figure 23D-205

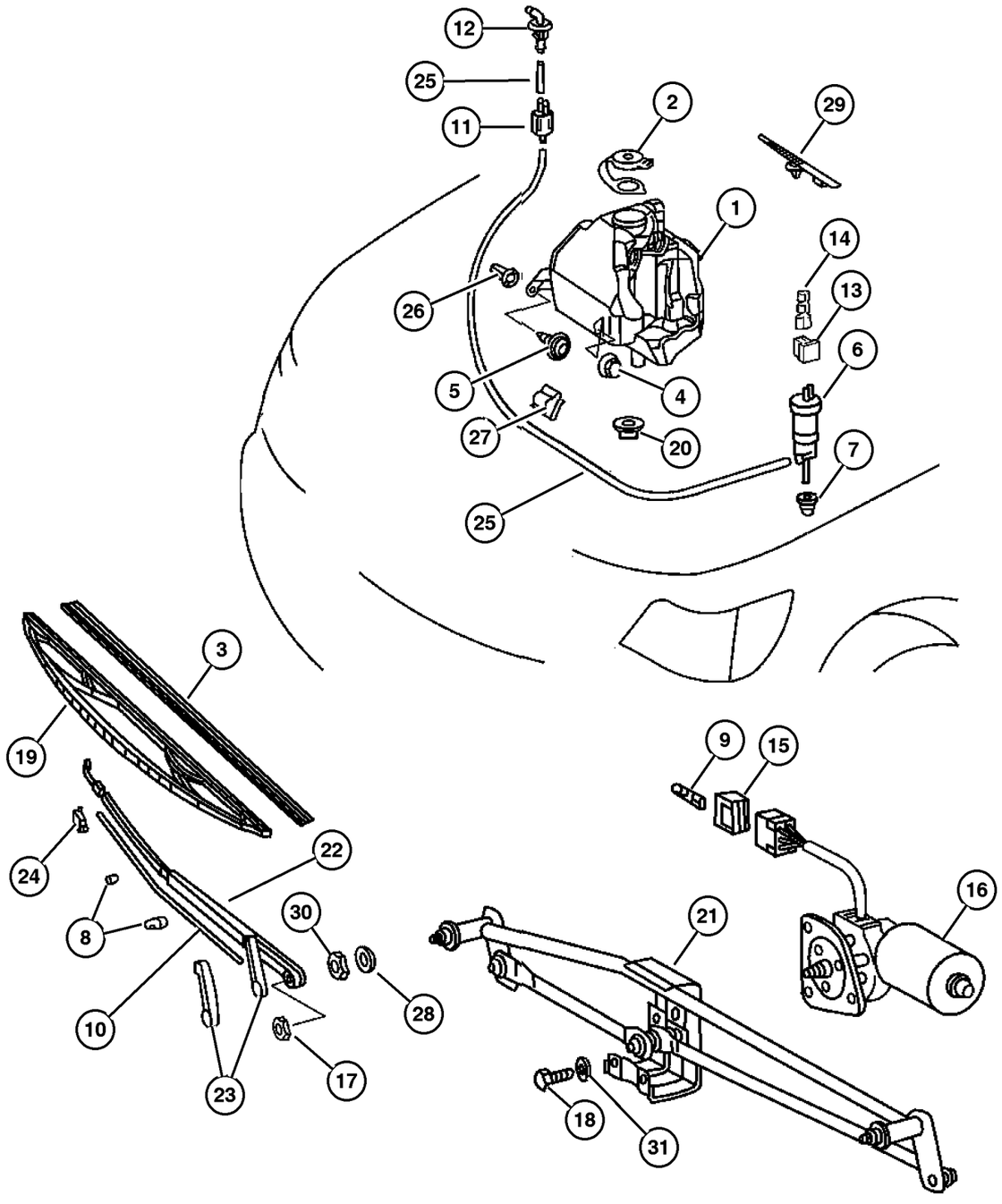

ITEM	PART NUMBER	QTY	LINE	SERIES	BODY	ENGINE	TRANS	TRIM	DESCRIPTION
		2	2, 6		51, 52, 54, 55, 56				
	6104 285AA	2	3, 7		02, 06				
		2	3, 7		12, 15, 16				
6									PUMP, Washer, Windshield
	5103 700AA	1	2, 6		01, 02, 06				Stamp nbr A0008604826
		1	2, 6		11, 12, 14, 15, 16				Stamp nbr A0008604826
		1	2, 6		51, 52, 54, 55, 56				Stamp nbr A0008604826
		1	3, 7		02, 06				Stamp nbr A0008604826
		1	3, 7		12, 15, 16				Stamp nbr A0008604826
	5124 954AA	1	2, 6		01, 02, 06				Stamp nbr A0008603326
		1	2, 6		11, 12, 14, 15, 16				Stamp nbr A0008603326
		1	2, 6		51, 52, 54, 55, 56				Stamp nbr A0008603326
		1	3, 7		02, 06				Stamp nbr A0008603326
		1	3, 7		12, 15, 16				Stamp nbr A0008603326
7									GROMMET, Windshield Washer Pump
	5125 077AA	1	3, 7		02, 06				With high pressure headlamp washer
		1	3, 7		12, 15, 16				With high pressure headlamp washer
	5125 939AA	1	2, 6		01, 02, 06				Without high pressure headlamp washer
		1	2, 6		11, 12, 14, 15, 16				Without high pressure headlamp washer
		1	2, 6		51, 52, 54, 55, 56				Without high pressure headlamp washer
		1	3, 7		02, 06				Without high pressure headlamp washer

Refer to Model Legend Information Bookmark

Windshield Wiper & Washer
Figure 23D-205

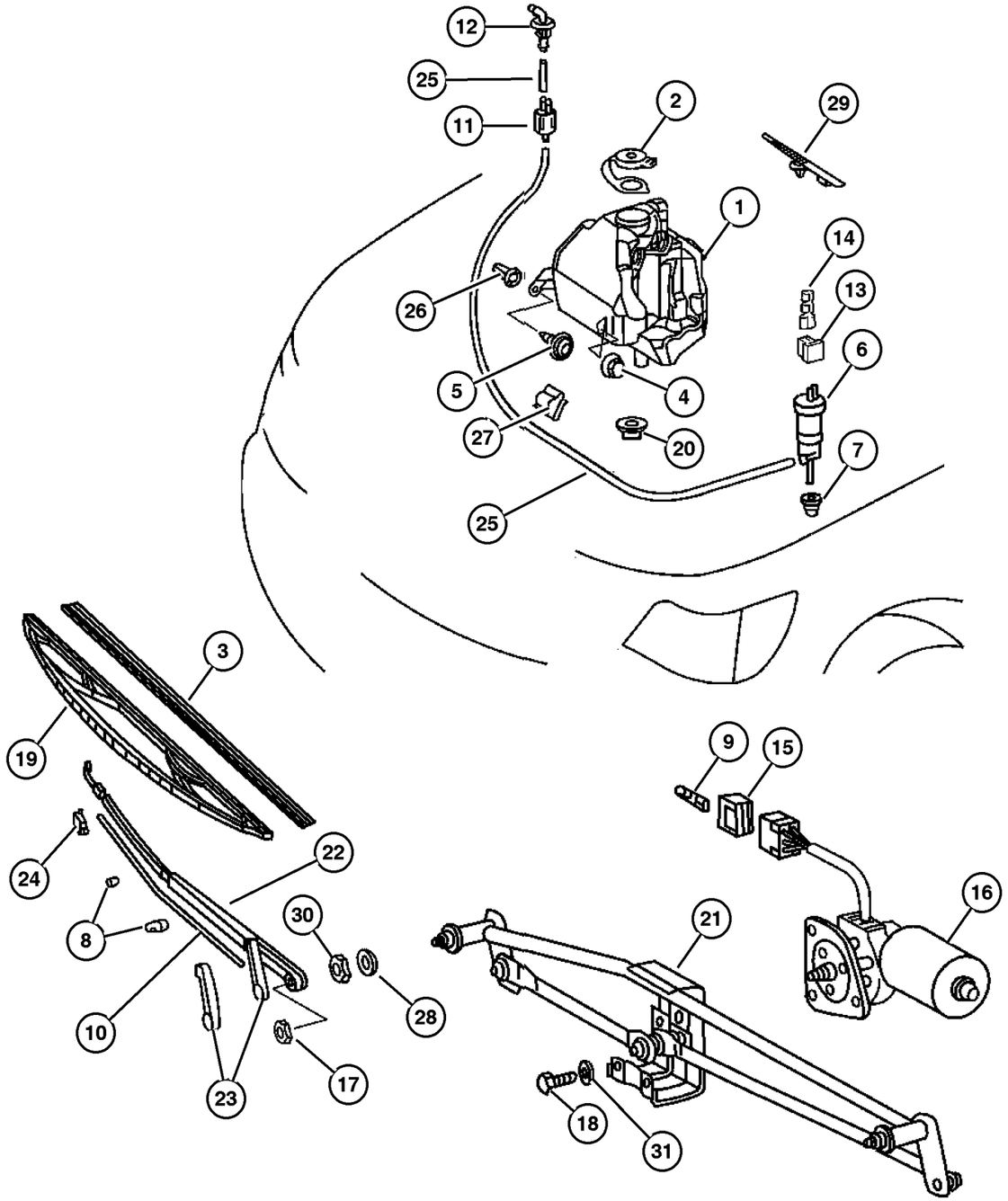

ITEM	PART NUMBER	QTY	LINE	SERIES	BODY	ENGINE	TRANS	TRIM	DESCRIPTION
		1	3, 7		12, 15, 16				Without high pressure headlamp washer
8	5133 994AA	1	2, 6		01, 02, 06				CLIP, Washer Hose
9									GROMMET, Windshield Washer
	5125 939AA	1	2, 6		11, 12, 14, 15, 16				Pump
		1	3, 7		02, 06				
		1	3, 7		12, 15, 16				
10									HOSE, Windshield Washer
	5125 066AA	1	2, 6		01, 02, 06				
		1	2, 6		11, 12, 14, 15, 16				
	5133 996AA	1	2, 6		51, 52, 54, 55, 56				
		1	3, 7		02, 06				
		1	3, 7		12, 15, 16				
11									CHECK VALVE, Washer
	5124 963AA	1	2, 6		01, 02, 06				
		1	3, 7		02, 06				
12	5125 061AA	2	2, 6		01, 02, 06				CONNECTOR, Washer Hose, Elbow Type, Elbow type connector
13									INSULATOR, 2 Way Female
	5103 754AA	1	2, 6		11, 12, 14, 15, 16				
		2	3, 7		02, 06				
14	5099 306AA	6	2, 6		01, 02, 06				TERMINAL, Female
15	5103 863AA	1	3, 7		12, 15, 16				CONNECTOR
16	5103 561AA	1	2, 6		01, 02, 06				MOTOR, Wiper
17	6104 709AA	4	2, 6		01, 02, 06				NUT, M8
18	5073 824AA	2	2, 6		01, 02, 06				SCREW
19									WIPER BLADE, (NOT REQUIRED)

Refer to Model Legend Information Bookmark

Windshield Wiper & Washer
Figure 23D-205

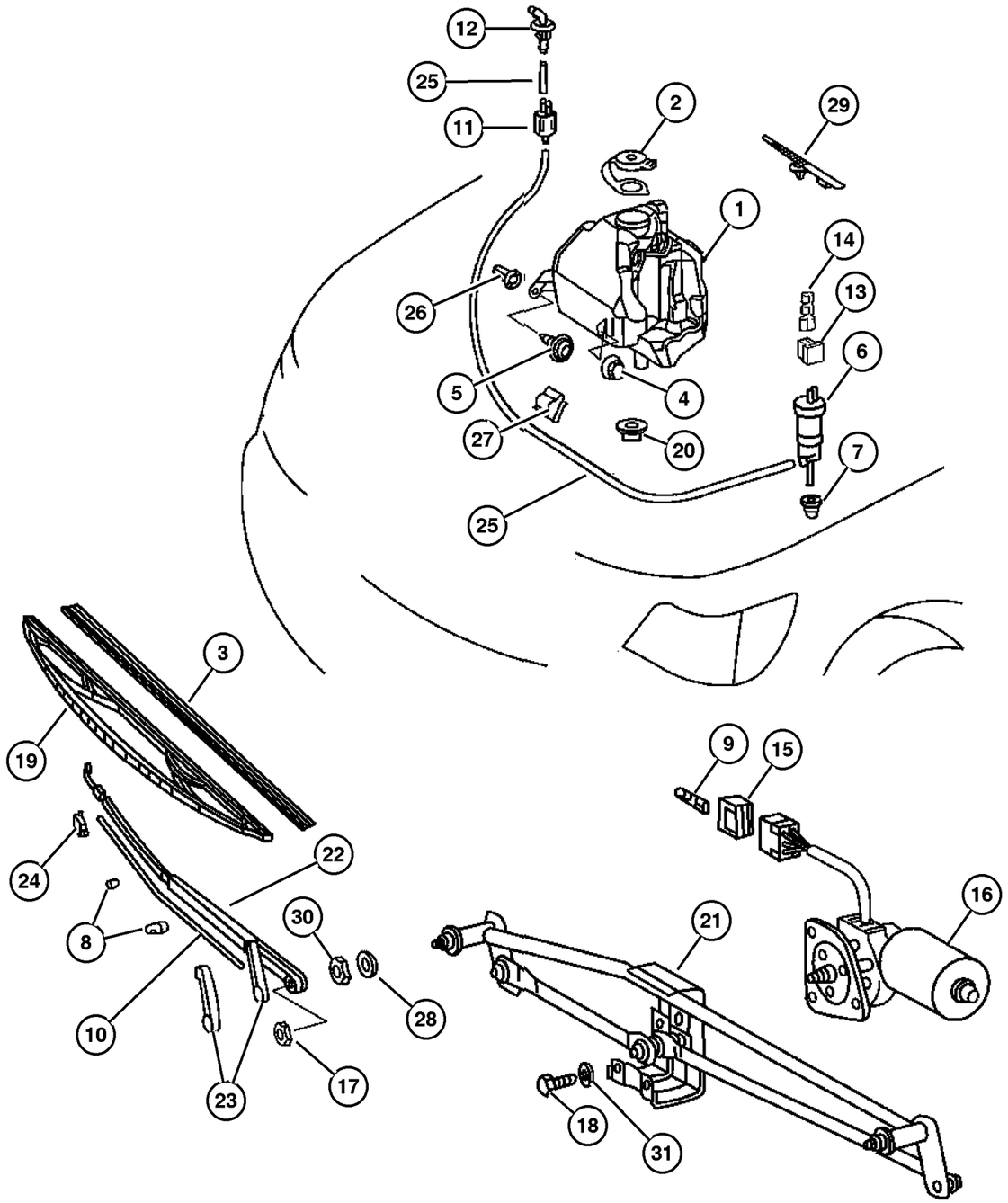

ITEM	PART NUMBER	QTY	LINE	SERIES	BODY	ENGINE	TRANS	TRIM	DESCRIPTION
20									GROMMET, Washer Reservoir
	5125 941AA	2	2, 6		01, 02, 06				
		2	3, 7		02, 06				
21									LINKAGE, Wiper Arm, (NOT REQUIRED)
22									WIPER BLADE
	5103 544AA	1	2, 6		01, 02, 06				Drivers wiper 24
	5124 455AA	1	2, 6		01, 02, 06				Passenger wiper
		1	3, 7		12, 15, 16				
23									COVER, Wiper Arm, (NOT REQUIRED)
24									NOZZLE, Washer, Windshield, (NOT REQUIRED)
25									HOSE, Windshield Washer
	5125 066AA	1	2, 6		01, 02, 06				
		1	3, 7		02, 06				
26									PLUG, Push Lock, (NOT REQUIRED)
27									CLIP
	6507 148AA	8	2, 6		51, 52, 54, 55, 56				
		8	3, 7		12, 15, 16				
28									WASHER, (NOT REQUIRED)
29									STRAP, Tie
	5133 690AA	8	3, 7		02, 06				
		8	3, 7		12, 15, 16				
30									NUT, (NOT REQUIRED)
31									WASHER, (NOT REQUIRED)

Refer to Model Legend Information Bookmark

Group – 024
Air Conditioning & Heater

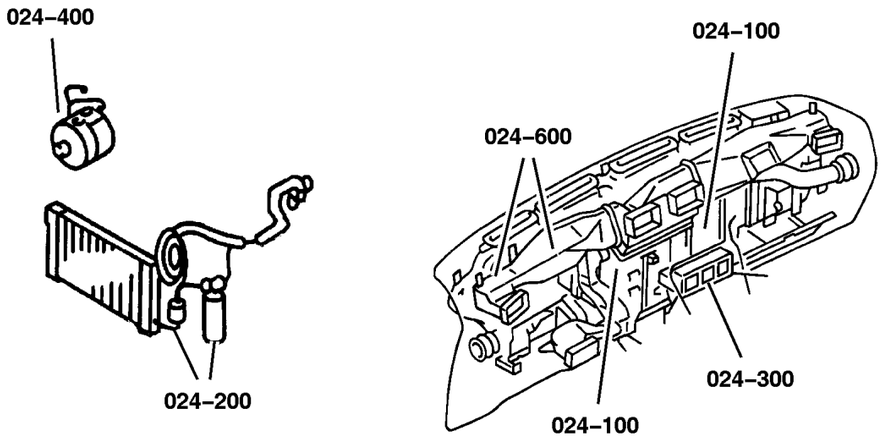

024–100 Air Conditioner and Heater Units	**024–200** Air Conditioner and Heater Plumbing	**024–300** Air Conditioner and Heater Controls	**024–400** Air Conditioning Compressor
024–600 Air Ducts and Outlets			

GROUP 24 - Air Conditioning & Heater

Illustration Title	Group-Fig. No.
Air Conditioner and Heater Units	
Hevac Unit, Front	Fig. 024-130
Air Conditioner and Heater Plumbing	
Heat Exchanger and Plumbing	Fig. 024-250
Plumbing, Heater	Fig. 024-260
Plumbing, Heater with Auxiliary warm water Heater	Fig. 024-265
Plumbing, Air Conditioning	Fig. 024-270
Condenser, Fan Front	Fig. 024-280
Condenser, Fan Roof	Fig. 024-285
Auxiliary Warm Water Heater	Fig. 024-290
Air Conditioner and Heater Controls	
Control	Fig. 024-320
Air Conditioning Compressor	
Compressor and Mounting	Fig. 024-420
Air Ducts and Outlets	
Air Ducts And Outlets, Front	Fig. 024-630
Air Ducts And Outlets, Rear	Fig. 024-640
Ventilator, Roof Mounted	Fig. 024-650

Hevac Unit, Front
Figure 024-130

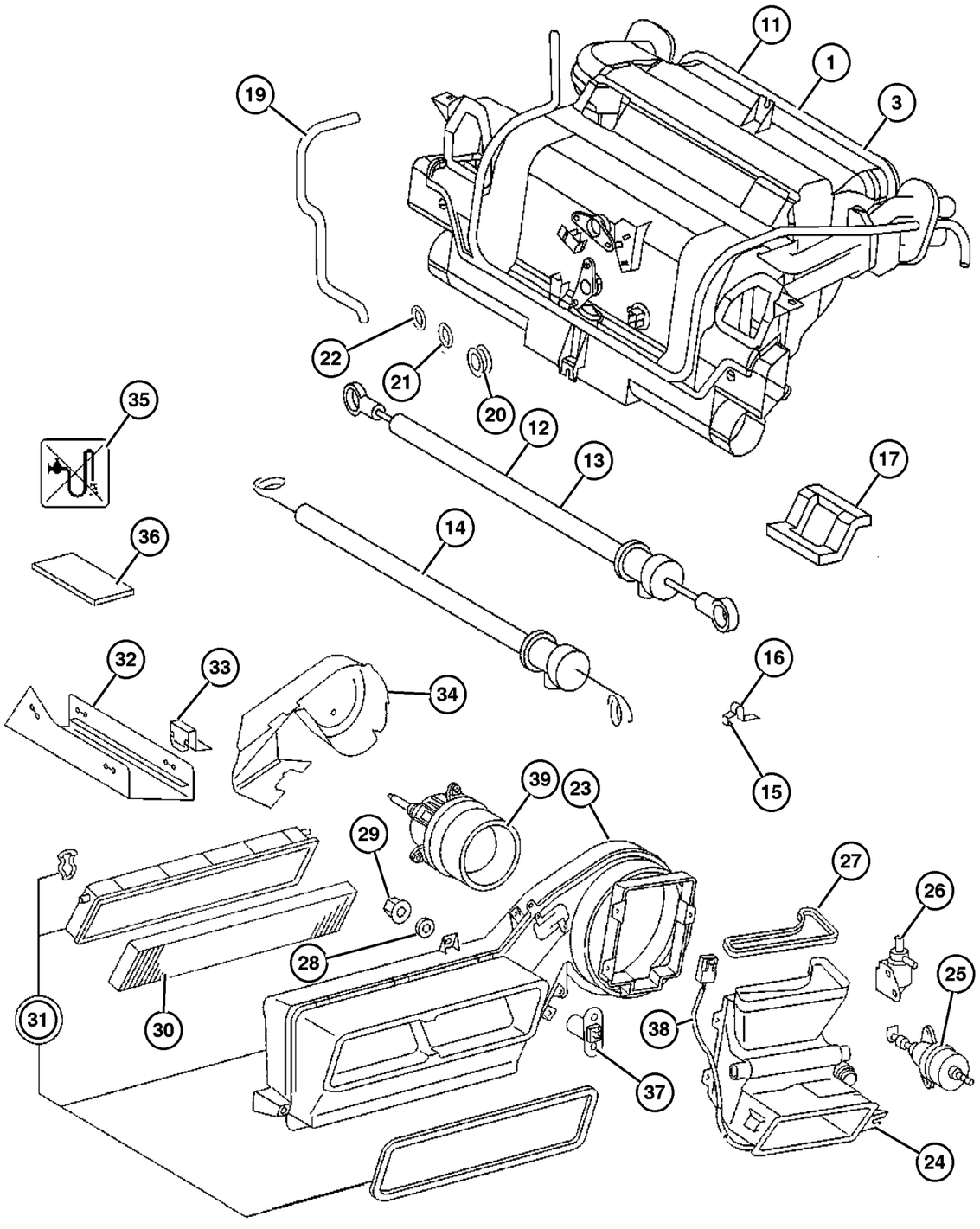

ITEM	PART NUMBER	QTY	LINE	SERIES	BODY	ENGINE	TRANS	TRIM	DESCRIPTION
1									HEATER
	5133 422AA	1	2, 6		01, 02, 06	EX8			
		1	2, 6		11, 12, 14, 15, 16	EX8			
		1	2, 6		51, 52, 54, 55, 56	EX8			
		1	3, 7		02, 06	EX8			
		1	3, 7		12, 15, 16	EX8			
-2									SCREW, Attaching
	6104 610AA-	4	2, 6		11, 12, 14, 15, 16	EX8			
		4	2, 6		51, 52, 54, 55, 56	EX8			
		4	3, 7		02, 06	EX8			
		4	3, 7		12, 15, 16	EX8			
3									HEATER AND A/C UNIT, Includes items 3 - 9
	5134 379AA	1	2, 6		01, 02, 06	EX8			
		1	2, 6		11, 12, 14, 15, 16	EX8			
		1	2, 6		51, 52, 54, 55, 56	EX8			
		1	3, 7		02, 06	EX8			
		1	3, 7		12, 15, 16	EX8			
-4									OUTLET, Air Conditioning & Heater
	5133 424AA-	1	2, 6		01, 02, 06	EX8			
		1	2, 6		11, 12, 14, 15, 16	EX8			
		1	2, 6		51, 52, 54, 55, 56	EX8			
		1	3, 7		02, 06	EX8			

Refer to Model Legend Information Bookmark

AR = Use as required - = Non illustrated part # = New this model year

March 3, 2006

« RETURN TO GROUP INDEX

»

Hevac Unit, Front
Figure 024-130

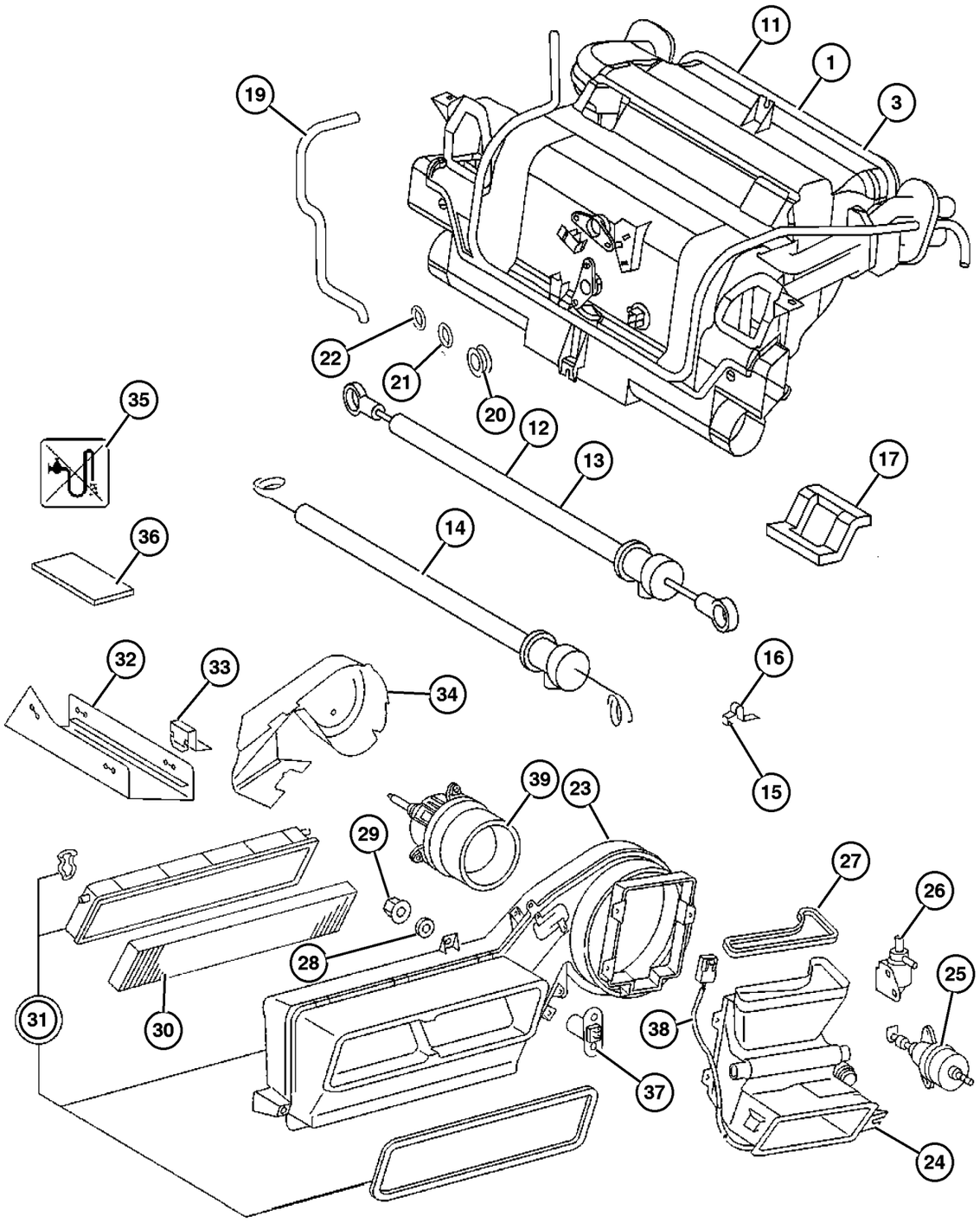

ITEM	PART NUMBER	QTY	LINE	SERIES	BODY	ENGINE	TRANS	TRIM	DESCRIPTION
		1	3, 7		12, 15, 16	EX8			
-5									GASKET
	5103 773AA-	1	2, 6		01, 02, 06	EX8			
		1	2, 6		11, 12, 14, 15, 16	EX8			
		1	2, 6		51, 52, 54, 55, 56	EX8			
		1	3, 7		02, 06	EX8			
		1	3, 7		12, 15, 16	EX8			
-6									VALVE
	5103 809AA-	1	2, 6		01, 02, 06	EX8			
		1	2, 6		11, 12, 14, 15, 16	EX8			
		1	2, 6		51, 52, 54, 55, 56	EX8			
		1	3, 7		02, 06	EX8			
		1	3, 7		12, 15, 16	EX8			
-7									TUBE
	5133 425AA-	1	2, 6		01, 02, 06	EX8			
		1	2, 6		11, 12, 14, 15, 16	EX8			
		1	2, 6		51, 52, 54, 55, 56	EX8			
		1	3, 7		02, 06	EX8			
		1	3, 7		12, 15, 16	EX8			
-8									HEATER, Exchanger
	5133 426AA-	1	2, 6		01, 02, 06	EX8			
		1	2, 6		11, 12, 14, 15, 16	EX8			

Refer to Model Legend Information Bookmark

AR = Use as required - = Non illustrated part # = New this model year

March 3, 2006

« RETURN TO GROUP INDEX

« »

Hevac Unit, Front
Figure 024-130

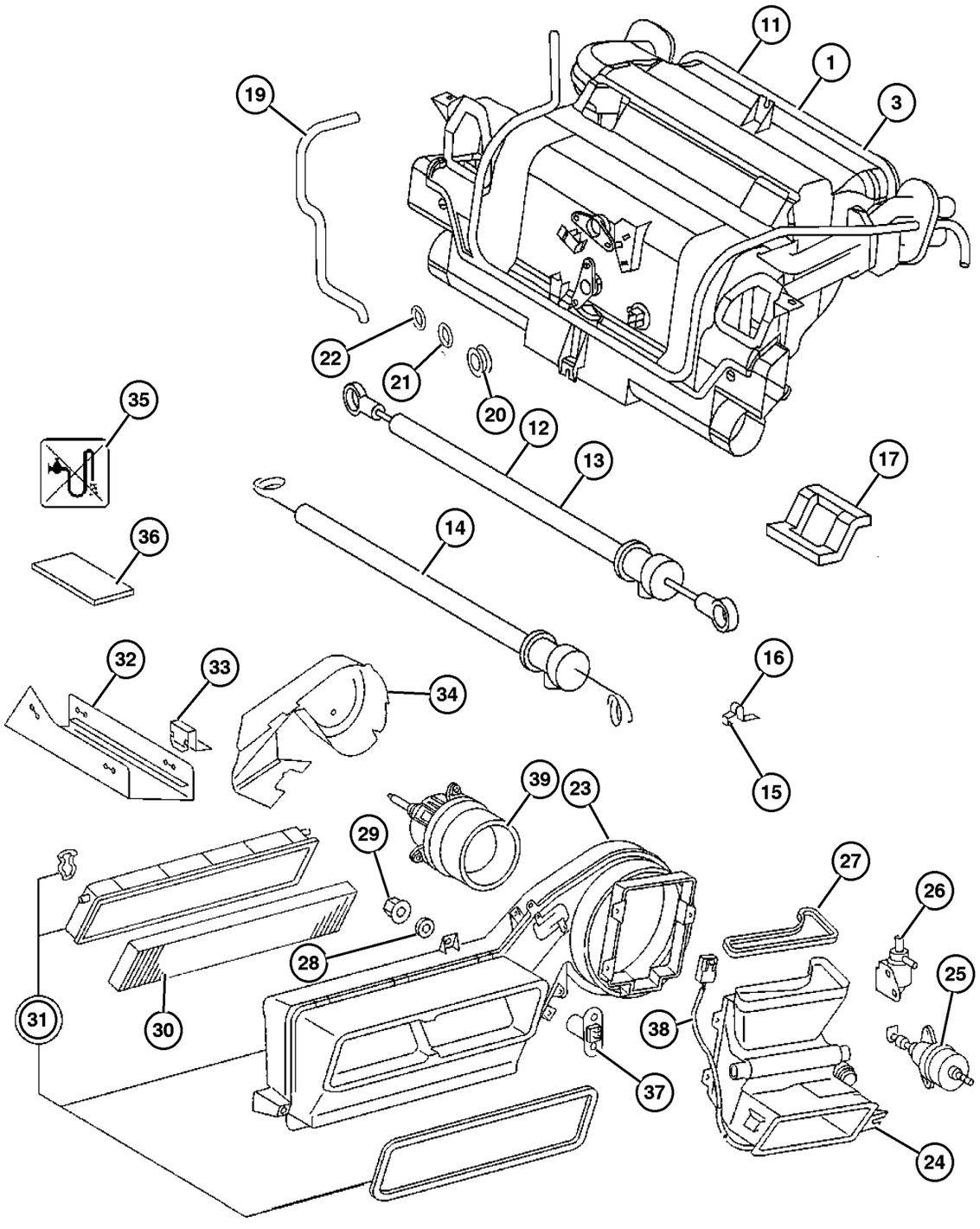

ITEM	PART NUMBER	QTY	LINE	SERIES	BODY	ENGINE	TRANS	TRIM	DESCRIPTION
		1	2, 6		51, 52,	EX8			
					54, 55,				
					56				
		1	3, 7		02, 06	EX8			
		1	3, 7		12, 15,	EX8			
					16				
-9									EVAPORATOR, Air Conditioning
	5103 694AA-	1	2, 6		01, 02,	EX8			
					06				
		1	2, 6		11, 12,	EX8			
					14, 15,				
					16				
		1	2, 6		51, 52,	EX8			
					54, 55,				
					56				
		1	3, 7		02, 06	EX8			
		1	3, 7		12, 15,	EX8			
					16				
-10									SENSOR, Temperature
	5103 937AA-	1	2, 6		01, 02,	EX8			Flat Plug Version
					06				
		1	2, 6		11, 12,	EX8			Flat Plug Version
					14, 15,				
					16				
		1	2, 6		51, 52,	EX8			Flat Plug Version
					54, 55,				
					56				
		1	3, 7		02, 06	EX8			Flat Plug Version
		1	3, 7		12, 15,	EX8			Flat Plug Version
					16				
	5133 427AA-	1	2, 6		01, 02,	EX8			
					06				
		1	2, 6		11, 12,	EX8			
					14, 15,				
					16				
		1	2, 6		51, 52,	EX8			
					54, 55,				
					56				
		1	3, 7		02, 06	EX8			
		1	3, 7		12, 15,	EX8			
					16				
11									CONTROL, Electronic
	5104 477AA	1	2, 6		01, 02,	EX8			
					06				

Refer to Model Legend Information Bookmark

AR = Use as required - = Non illustrated part # = New this model year

March 3, 2006

« RETURN TO GROUP INDEX

« »

Hevac Unit, Front
Figure 024-130

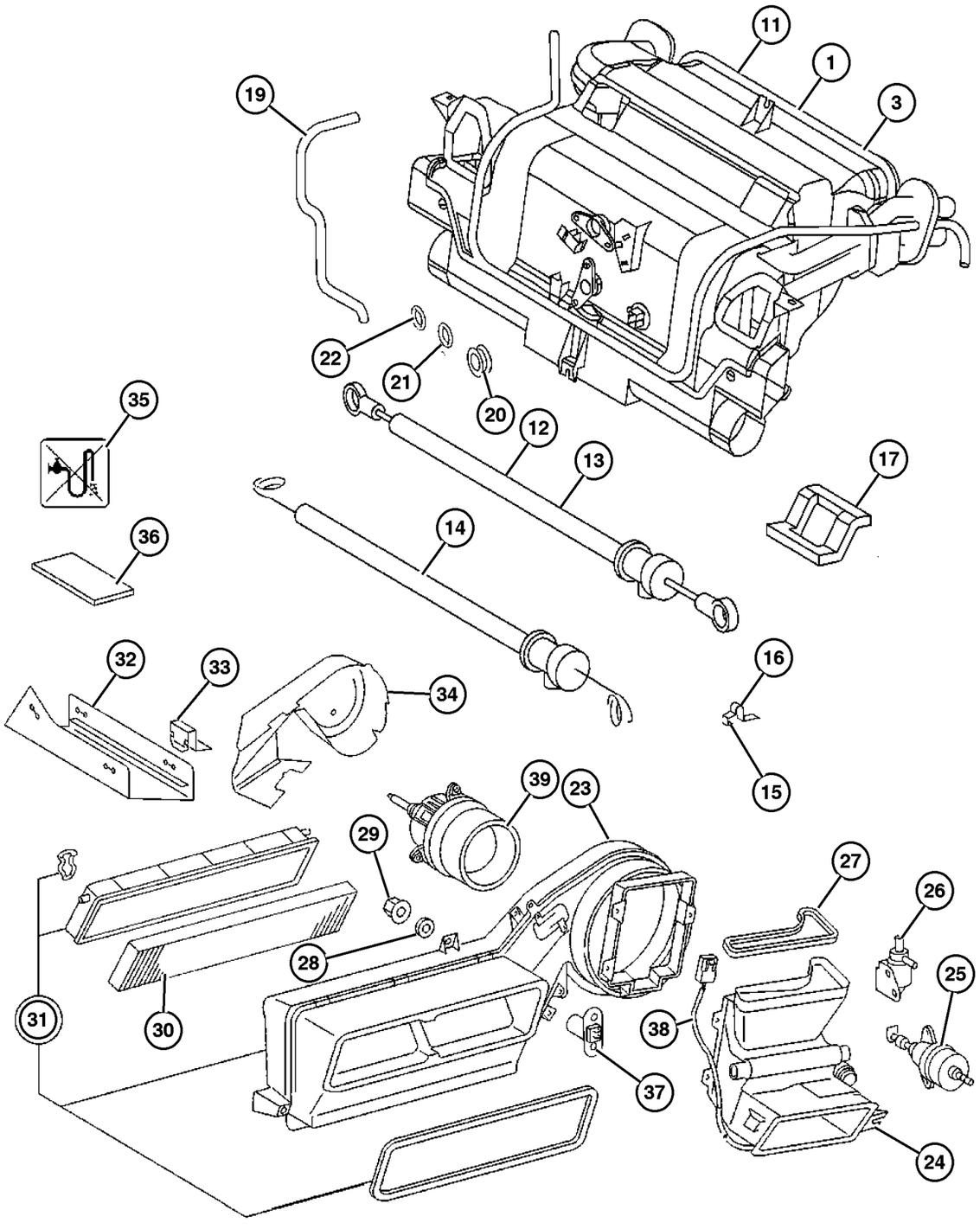

ITEM	PART NUMBER	QTY	LINE	SERIES	BODY	ENGINE	TRANS	TRIM	DESCRIPTION
		1	2, 6		11, 12, 14, 15, 16	EX8			
		1	2, 6		51, 52, 54, 55, 56	EX8			
		1	3, 7		02, 06	EX8			
		1	3, 7		12, 15, 16	EX8			
12									CABLE, A/C And Heater Control
	5104 492AA	1	2, 6		01, 02, 06	EX8			
		1	2, 6		11, 12, 14, 15, 16	EX8			
		1	2, 6		51, 52, 54, 55, 56	EX8			
		1	3, 7		02, 06	EX8			
		1	3, 7		12, 15, 16	EX8			
13									CABLE, A/C And Heater Control, Defrost
	5104 493AA	1	2, 6		01, 02, 06	EX8			
		1	2, 6		11, 12, 14, 15, 16	EX8			
		1	2, 6		51, 52, 54, 55, 56	EX8			
		1	3, 7		02, 06	EX8			
		1	3, 7		12, 15, 16	EX8			
14									CABLE, A/C And Heater Control, Water Valve
	5104 492AA	1	2, 6		01, 02, 06	EX8			
		1	2, 6		11, 12, 14, 15, 16	EX8			
		1	2, 6		51, 52, 54, 55, 56	EX8			
		1	3, 7		02, 06	EX8			

Refer to Model Legend Information Bookmark

AR = Use as required - = Non illustrated part # = New this model year

March 3, 2006

« RETURN TO GROUP INDEX

Hevac Unit, Front
Figure 024-130

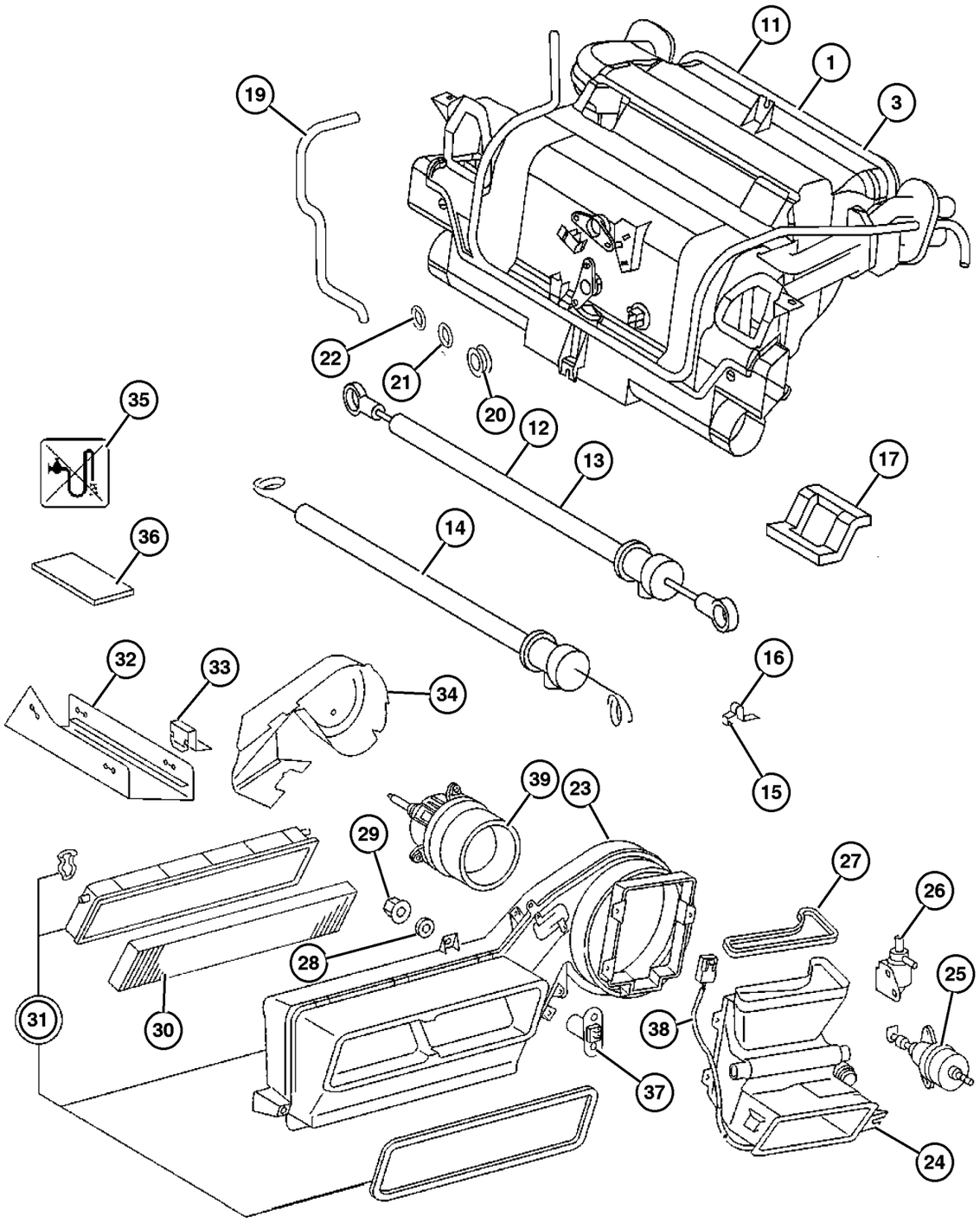

ITEM	PART NUMBER	QTY	LINE	SERIES	BODY	ENGINE	TRANS	TRIM	DESCRIPTION
		1	3, 7		12, 15, 16	EX8			
15									CLIP
	5125 562AA	1	2, 6		01, 02, 06	EX8			
		1	2, 6		11, 12, 14, 15, 16	EX8			
		1	2, 6		51, 52, 54, 55, 56	EX8			
		1	3, 7		02, 06	EX8			
		1	3, 7		12, 15, 16	EX8			
16									CLIP, Cable
	5103 693AA	1	2, 6		01, 02, 06	EX8			
		1	2, 6		11, 12, 14, 15, 16	EX8			
		1	2, 6		51, 52, 54, 55, 56	EX8			
		1	3, 7		02, 06	EX8			
		1	3, 7		12, 15, 16	EX8			
17									SEAL
	5124 786AA	2	2, 6		11, 12, 14, 15, 16	EX8			
		2	2, 6		51, 52, 54, 55, 56	EX8			
		2	3, 7		02, 06	EX8			
		2	3, 7		12, 15, 16	EX8			
-18									CLIP, Hose
	5119 332AA-	1	2, 6		01, 02, 06	EX8			
		1	2, 6		11, 12, 14, 15, 16	EX8			
		1	2, 6		51, 52, 54, 55, 56	EX8			

Refer to Model Legend Information Bookmark

AR = Use as required - = Non illustrated part # = New this model year

March 3, 2006

« RETURN TO GROUP INDEX

« »

Hevac Unit, Front
Figure 024-130

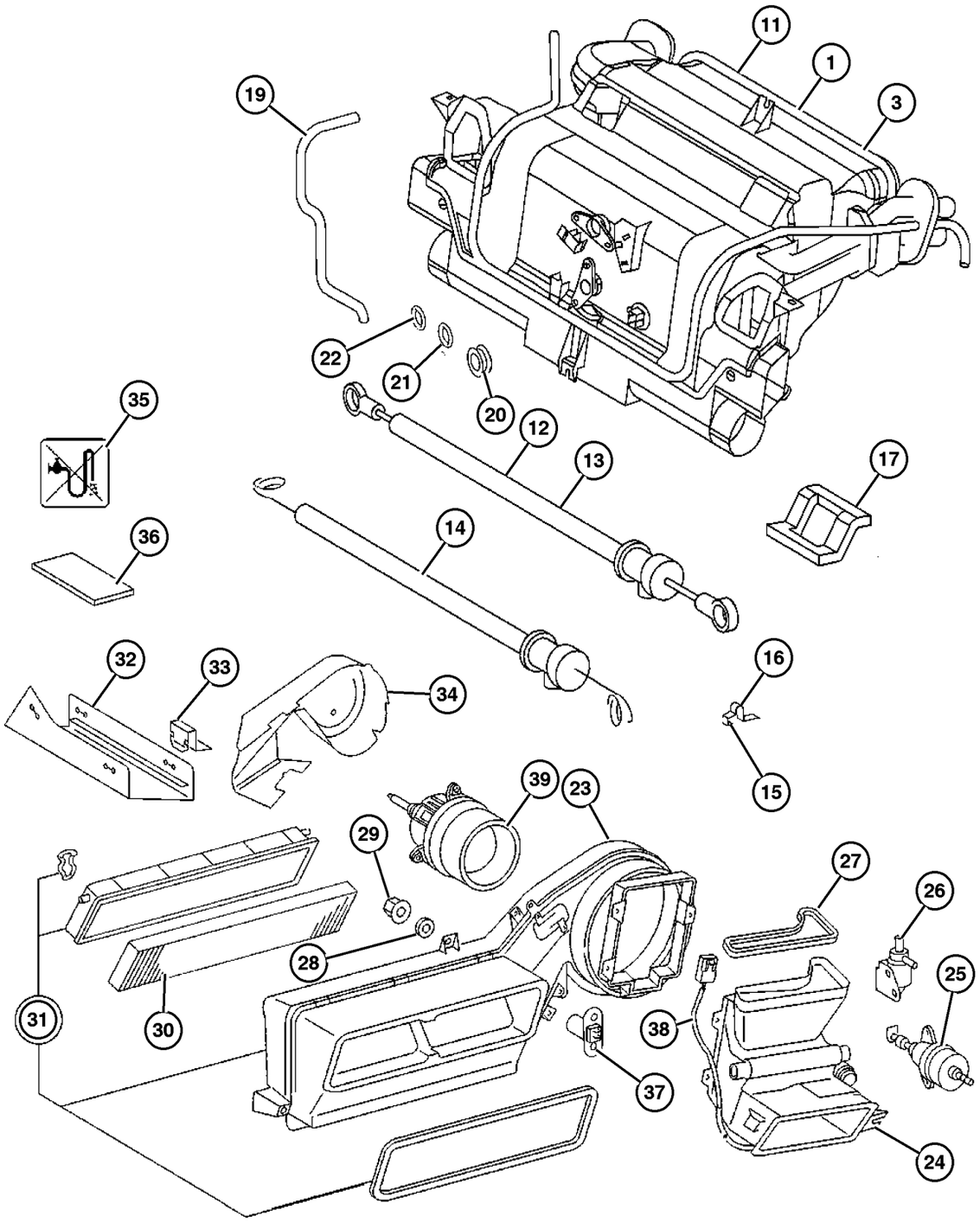

ITEM	PART NUMBER	QTY	LINE	SERIES	BODY	ENGINE	TRANS	TRIM	DESCRIPTION
		1	3, 7		02, 06	EX8			
		1	3, 7		12, 15, 16	EX8			
19									HOSE
	5124 827AA	1	2, 6		01, 02, 06	EX8			
		1	2, 6		11, 12, 14, 15, 16	EX8			
		1	2, 6		51, 52, 54, 55, 56	EX8			
		1	3, 7		02, 06	EX8			
		1	3, 7		12, 15, 16	EX8			
20									GROMMET
	5125 938AA	1	2, 6		01, 02, 06	EX8			
		1	2, 6		11, 12, 14, 15, 16	EX8			
		1	2, 6		51, 52, 54, 55, 56	EX8			
		1	3, 7		02, 06	EX8			
		1	3, 7		12, 15, 16	EX8			
21									O RING, A/C Line
	5098 971AA	1	2, 6		01, 02, 06	EX8			
		1	2, 6		11, 12, 14, 15, 16	EX8			
		1	2, 6		51, 52, 54, 55, 56	EX8			
		1	3, 7		02, 06	EX8			
		1	3, 7		12, 15, 16	EX8			
22									O RING, A/C Line
	5098 972AA	1	2, 6		01, 02, 06	EX8			
		1	2, 6		11, 12, 14, 15, 16	EX8			

Refer to Model Legend Information Bookmark

AR = Use as required - = Non illustrated part # = New this model year

March 3, 2006

« RETURN TO GROUP INDEX

« »

Hevac Unit, Front
Figure 024-130

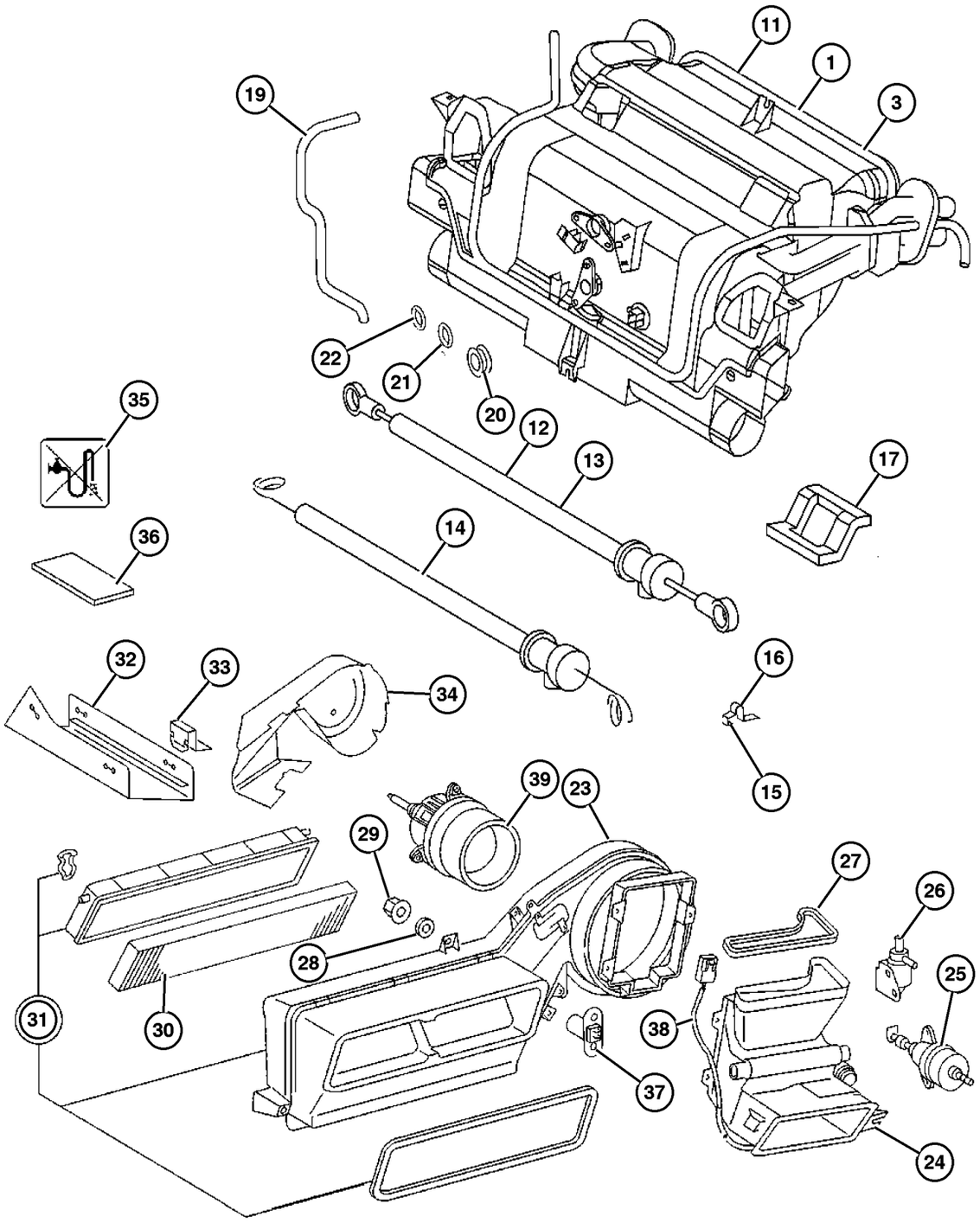

ITEM	PART NUMBER	QTY	LINE	SERIES	BODY	ENGINE	TRANS	TRIM	DESCRIPTION
		1	2, 6		51, 52, 54, 55, 56	EX8			
		1	3, 7		02, 06	EX8			
		1	3, 7		12, 15, 16	EX8			
23									HOUSING, Heater
	5124 712AA	1	2, 6		01, 02, 06	EX8			[-HAB]
		1	2, 6		11, 12, 14, 15, 16	EX8			[-HAB]
		1	2, 6		51, 52, 54, 55, 56	EX8			[-HAB]
		1	3, 7		02, 06	EX8			[-HAB]
		1	3, 7		12, 15, 16	EX8			[-HAB]
	5124 713AA	1	2, 6		01, 02, 06	EX8			[HAB]
		1	2, 6		11, 12, 14, 15, 16	EX8			[HAB]
		1	2, 6		51, 52, 54, 55, 56	EX8			[HAB]
		1	3, 7		02, 06	EX8			[HAB]
		1	3, 7		12, 15, 16	EX8			[HAB]
24									DUCT, Air Outlet
	5133 430AA	1	2, 6		01, 02, 06	EX8			
		1	2, 6		11, 12, 14, 15, 16	EX8			
		1	2, 6		51, 52, 54, 55, 56	EX8			
		1	3, 7		02, 06	EX8			
		1	3, 7		12, 15, 16	EX8			
25									ACTUATOR, A/C and Heater
	5133 441AA	1	2, 6		01, 02, 06	EX8			

Refer to Model Legend Information Bookmark

AR = Use as required - = Non illustrated part # = New this model year

March 3, 2006

« RETURN TO GROUP INDEX

« »

Hevac Unit, Front
Figure 024-130

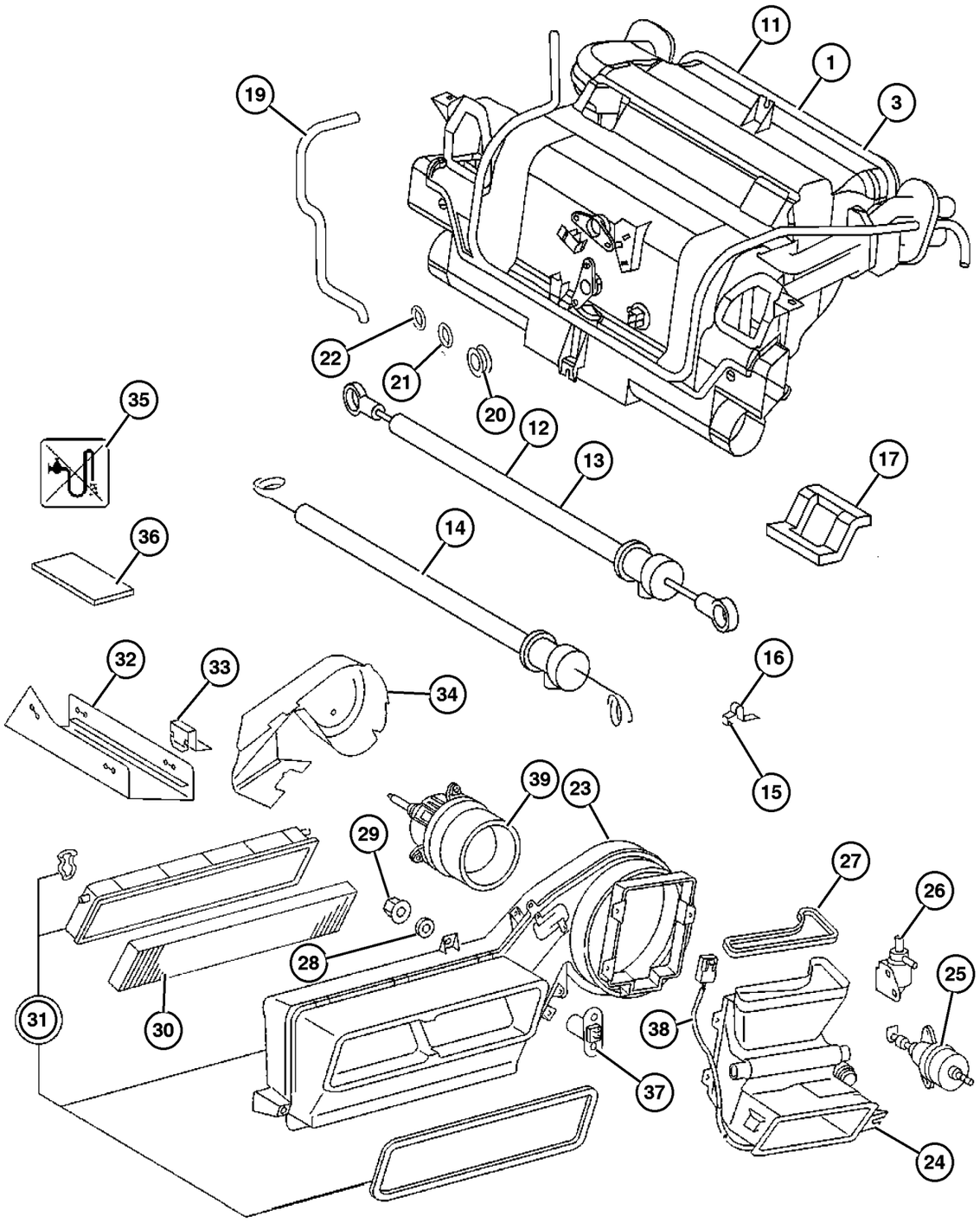

ITEM	PART NUMBER	QTY	LINE	SERIES	BODY	ENGINE	TRANS	TRIM	DESCRIPTION
		1	2, 6		11, 12, 14, 15, 16	EX8			
		1	2, 6		51, 52, 54, 55, 56	EX8			
		1	3, 7		02, 06	EX8			
		1	3, 7		12, 15, 16	EX8			
26									VALVE
	5133 433AA	1	2, 6		01, 02, 06	EX8			
		1	2, 6		11, 12, 14, 15, 16	EX8			
		1	2, 6		51, 52, 54, 55, 56	EX8			
		1	3, 7		02, 06	EX8			
		1	3, 7		12, 15, 16	EX8			
27									SEAL
	5124 770AA	1	2, 6		01, 02, 06	EX8			
		1	2, 6		11, 12, 14, 15, 16	EX8			
		1	2, 6		51, 52, 54, 55, 56	EX8			
		1	3, 7		02, 06	EX8			
28									WASHER, 05133908aa, (NOT SERVICED) (Not Serviced)
29									NUT
	5125 765AA	5	2, 6		01, 02, 06	EX8			
		5	2, 6		11, 12, 14, 15, 16	EX8			
		5	2, 6		51, 52, 54, 55, 56	EX8			
		5	3, 7		02, 06	EX8			

Refer to Model Legend Information Bookmark

AR = Use as required - = Non illustrated part # = New this model year

March 3, 2006

Hevac Unit, Front
Figure 024-130

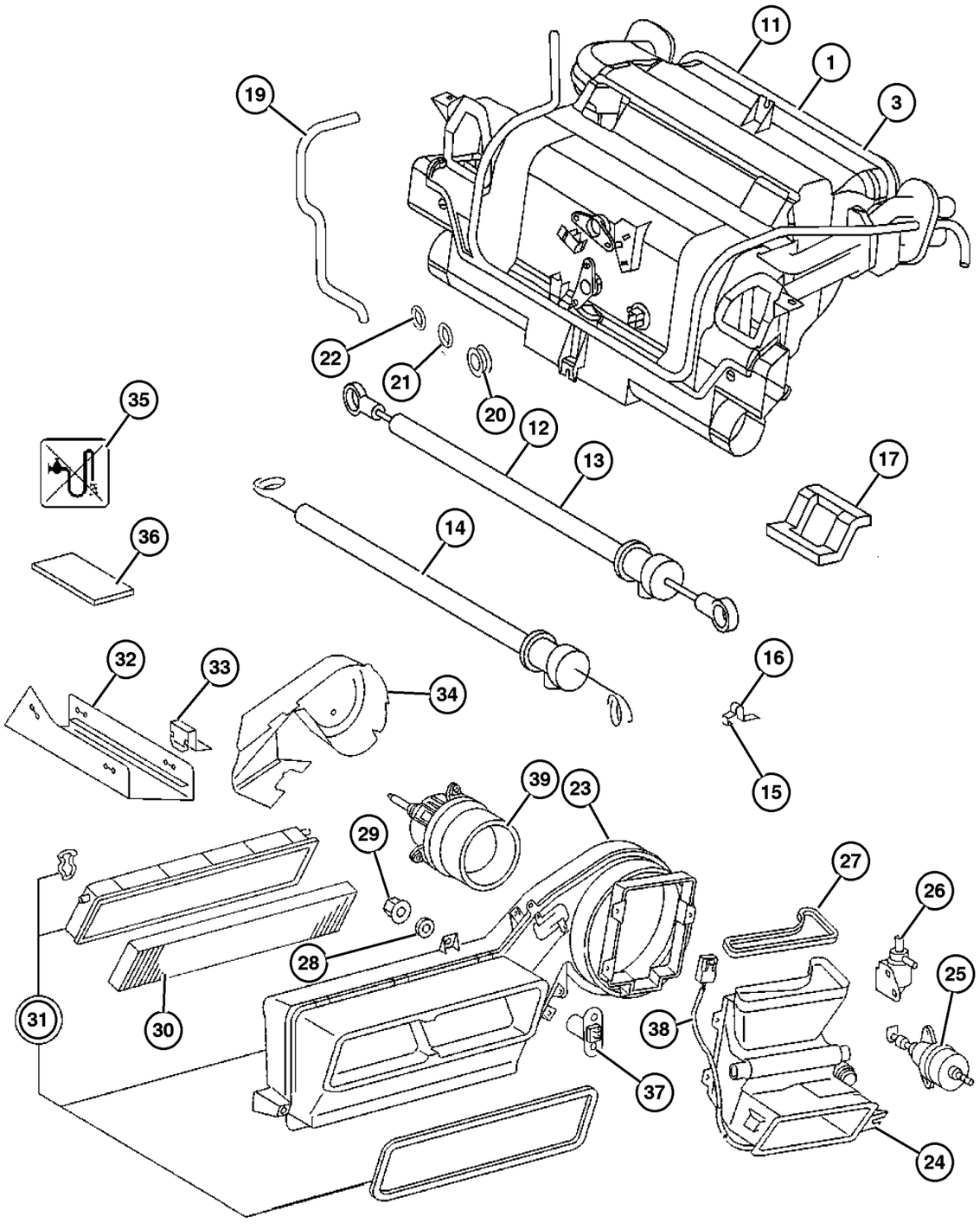

ITEM	PART NUMBER	QTY	LINE	SERIES	BODY	ENGINE	TRANS	TRIM	DESCRIPTION
		5	3, 7		12, 15, 16	EX8			
30	5103 600AA	1	2, 6		01, 02, 06	EX8			FILTER, A/C and Heater Unit
		1	2, 6		11, 12, 14, 15, 16	EX8			
		1	2, 6		51, 52, 54, 55, 56	EX8			
		1	3, 7		02, 06	EX8			
		1	3, 7		12, 15, 16	EX8			
31	5133 439AA	1	2, 6		01, 02, 06	EX8			COVER, A/C and Heater
		1	2, 6		11, 12, 14, 15, 16	EX8			
		1	2, 6		51, 52, 54, 55, 56	EX8			
		1	3, 7		02, 06	EX8			
		1	3, 7		12, 15, 16	EX8			
32	5124 759AA	1	2, 6		01, 02, 06	EX8			ISOLATOR
		1	2, 6		11, 12, 14, 15, 16	EX8			
		1	2, 6		51, 52, 54, 55, 56	EX8			
		1	3, 7		02, 06	EX8			
		1	3, 7		12, 15, 16	EX8			
33	5125 571AA	5	2, 6		01, 02, 06	EX8			CLIP
		5	2, 6		11, 12, 14, 15, 16	EX8			

Refer to Model Legend Information Bookmark

AR = Use as required - = Non illustrated part # = New this model year

March 3, 2006

« RETURN TO GROUP INDEX

« »

Hevac Unit, Front
Figure 024-130

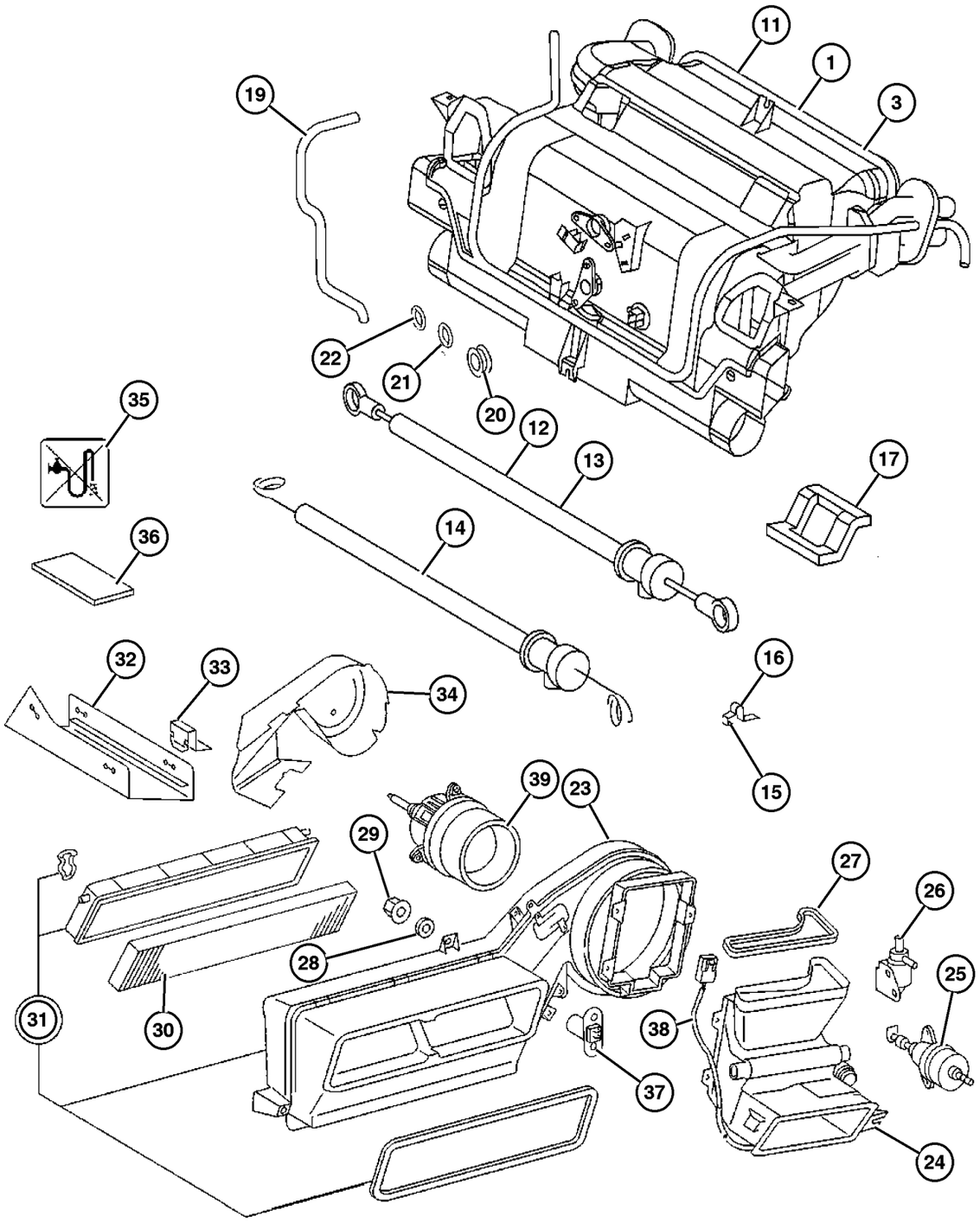

ITEM	PART NUMBER	QTY	LINE	SERIES	BODY	ENGINE	TRANS	TRIM	DESCRIPTION
		5	2, 6		51, 52,	EX8			
					54, 55,				
					56				
		5	3, 7		02, 06	EX8			
		5	3, 7		12, 15,	EX8			
					16				
34									INSULATION, Blower Motor
	5124 760AA	1	2, 6		01, 02,	EX8			
					06				
		1	2, 6		11, 12,	EX8			
					14, 15,				
					16				
		1	2, 6		51, 52,	EX8			
					54, 55,				
					56				
		1	3, 7		02, 06	EX8			
		1	3, 7		12, 15,	EX8			
					16				
35									LABEL
	5121 077AA	1	2, 6		01, 02,	EX8			
					06				
		1	2, 6		11, 12,	EX8			
					14, 15,				
					16				
		1	2, 6		51, 52,	EX8			
					54, 55,				
					56				
		1	3, 7		02, 06	EX8			
		1	3, 7		12, 15,	EX8			
					16				
36									PAD
	5133 443AA	5	2, 6		01, 02,	EX8			
					06				
		5	2, 6		11, 12,	EX8			
					14, 15,				
					16				
		5	2, 6		51, 52,	EX8			
					54, 55,				
					56				
		5	3, 7		12, 15,	EX8			
					16				
37									RESISTOR, Blower Motor
	5133 432AA	1	2, 6		01, 02,	EX8			
					06				

Refer to Model Legend Information Bookmark

AR = Use as required - = Non illustrated part # = New this model year

March 3, 2006

« RETURN TO GROUP INDEX

Hevac Unit, Front
Figure 024-130

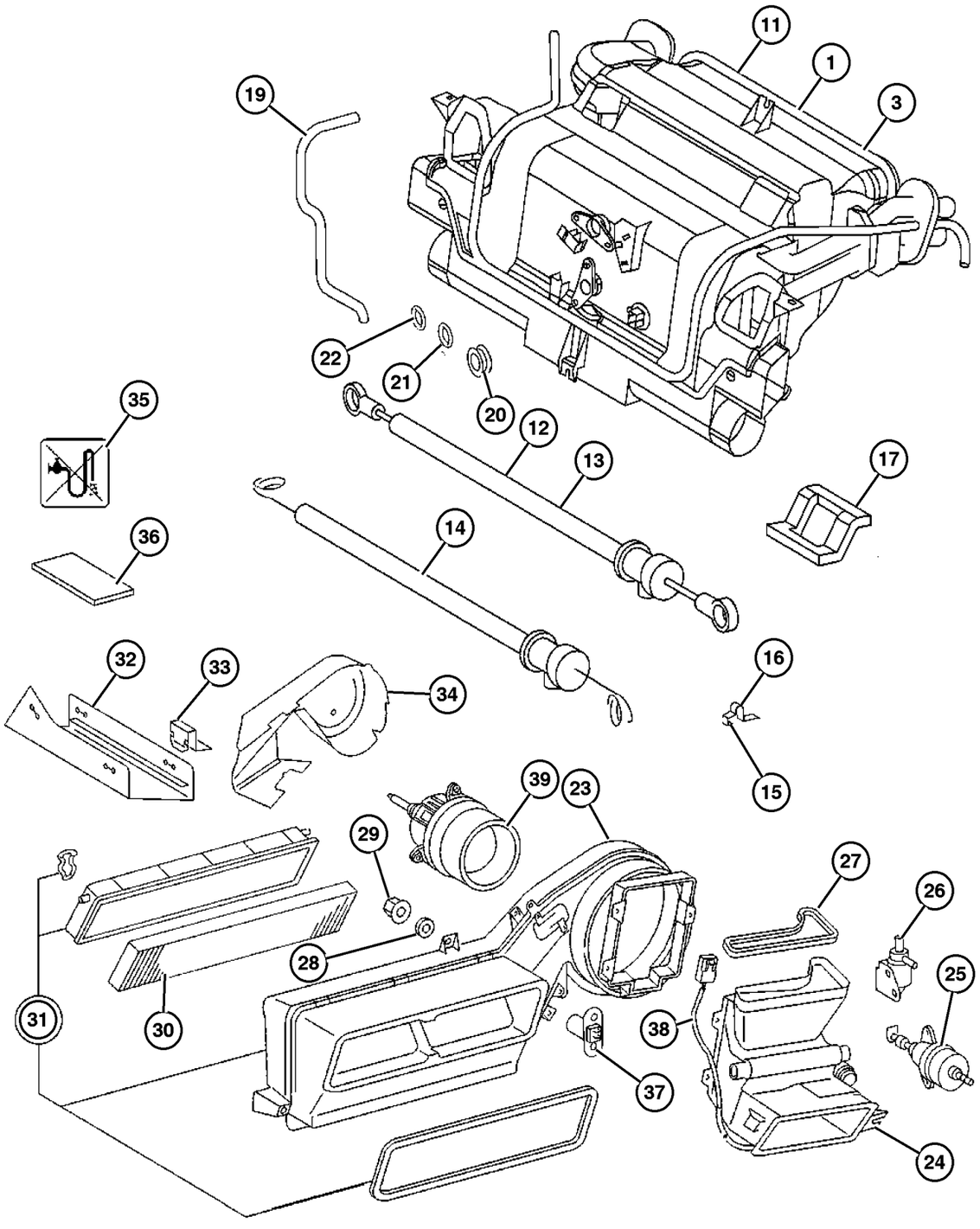

ITEM	PART NUMBER	QTY	LINE	SERIES	BODY	ENGINE	TRANS	TRIM	DESCRIPTION
		1	2, 6		11, 12, 14, 15, 16	EX8			
		1	2, 6		51, 52, 54, 55, 56	EX8			
		1	3, 7		02, 06	EX8			
		1	3, 7		12, 15, 16	EX8			
38									CABLE
	5133 471AA	1	2, 6		01, 02, 06	EX8			
		1	2, 6		11, 12, 14, 15, 16	EX8			
		1	2, 6		51, 52, 54, 55, 56	EX8			
		1	3, 7		02, 06	EX8			
		1	3, 7		12, 15, 16	EX8			
39									BLOWER
	5133 435AA	1	2, 6		01, 02, 06	EX8			
		1	2, 6		11, 12, 14, 15, 16	EX8			
		1	2, 6		51, 52, 54, 55, 56	EX8			
		1	3, 7		02, 06	EX8			
		1	3, 7		12, 15, 16	EX8			

Refer to Model Legend Information Bookmark

AR = Use as required - = Non illustrated part # = New this model year

March 3, 2006

« RETURN TO GROUP INDEX

Heat Exchanger and Plumbing
Figure 024-250

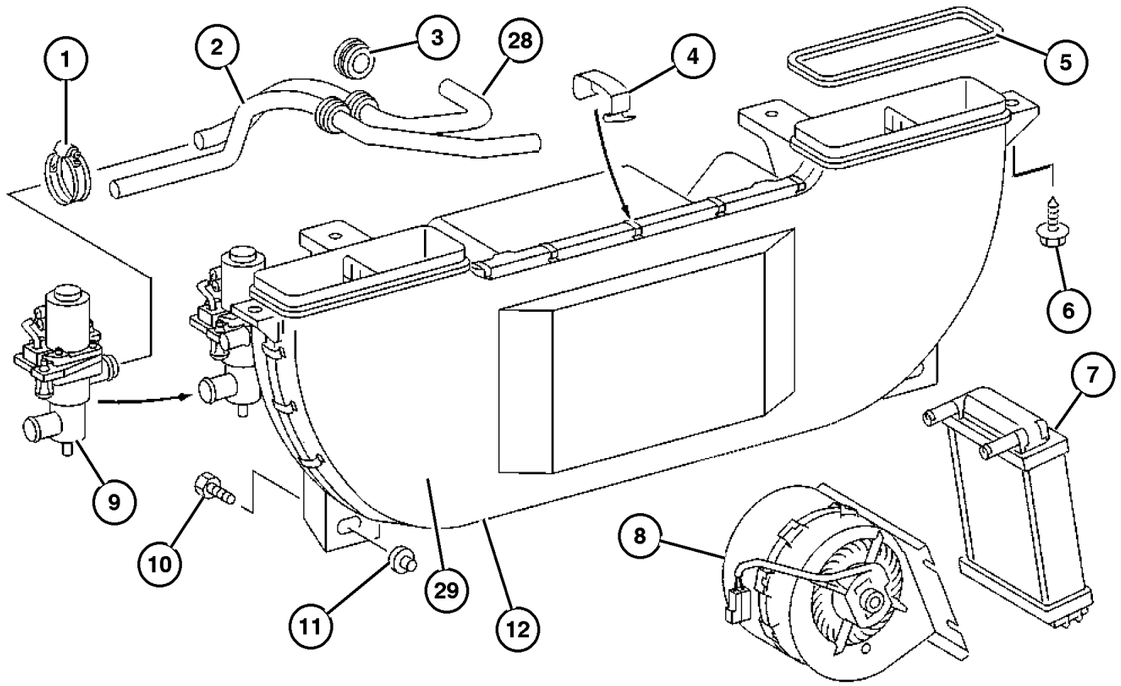

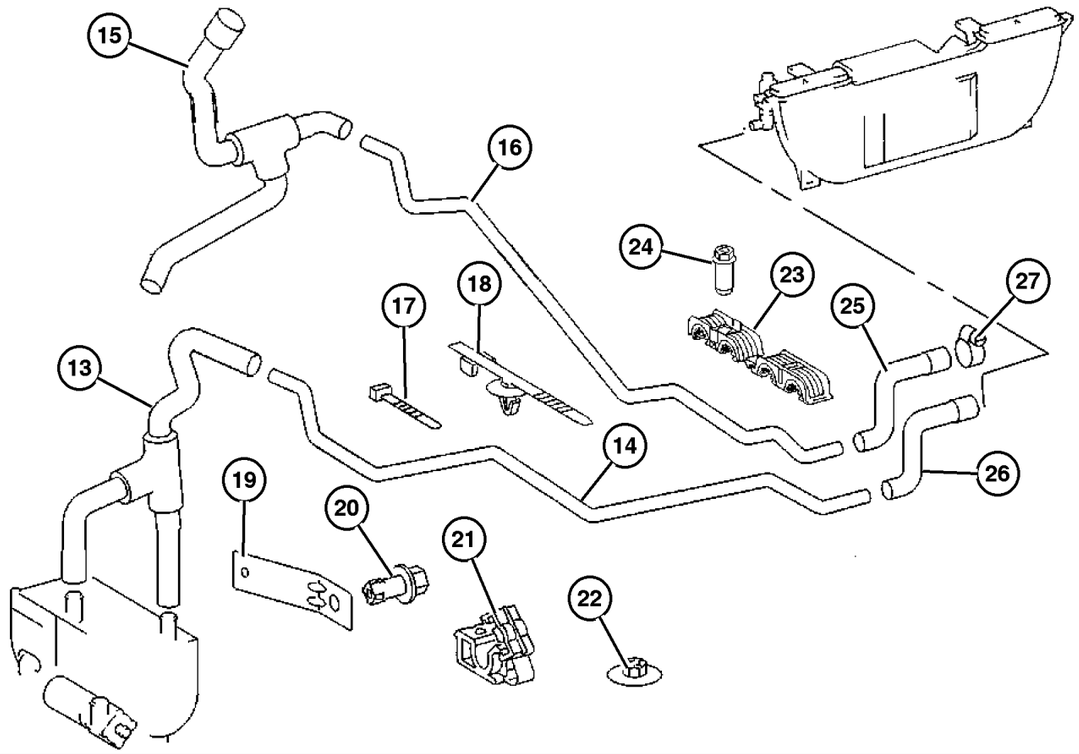

ITEM	PART NUMBER	QTY	LINE	SERIES	BODY	ENGINE	TRANS	TRIM	DESCRIPTION
1									CLAMP, Hose
	6104 781AA	1	2, 6		11, 12, 14, 15, 16	EX8			
		1	2, 6		51, 52, 54, 55, 56	EX8			
		6	3, 7		12, 15, 16	EX8			
2									LINE, Heater
	5133 587AA	1	2, 6		11, 12, 14, 15, 16	EX8			
		1	2, 6		51, 52, 54, 55, 56	EX8			
		1	3, 7		12, 15, 16	EX8			
3									GROMMET
	5133 588AA	1	2, 6		11, 12, 14, 15, 16	EX8			
		1	2, 6		51, 52, 54, 55, 56	EX8			
		2	3, 7		12, 15, 16	EX8			
4									CLIP, HEATER
	5133 592AA	22	2, 6		11, 12, 14, 15, 16	EX8			
		22	2, 6		51, 52, 54, 55, 56	EX8			
		22	3, 7		12, 15, 16	EX8			
5									GASKET, heater duct
	5133 593AA	1	2, 6		11, 12, 14, 15, 16	EX8			
		1	2, 6		51, 52, 54, 55, 56	EX8			
		1	3, 7		12, 15, 16	EX8			
6									SCREW, Tapping

Refer to Model Legend Information Bookmark

AR = Use as required - = Non illustrated part # = New this model year

March 3, 2006

« RETURN TO GROUP INDEX

»

Heat Exchanger and Plumbing
Figure 024-250

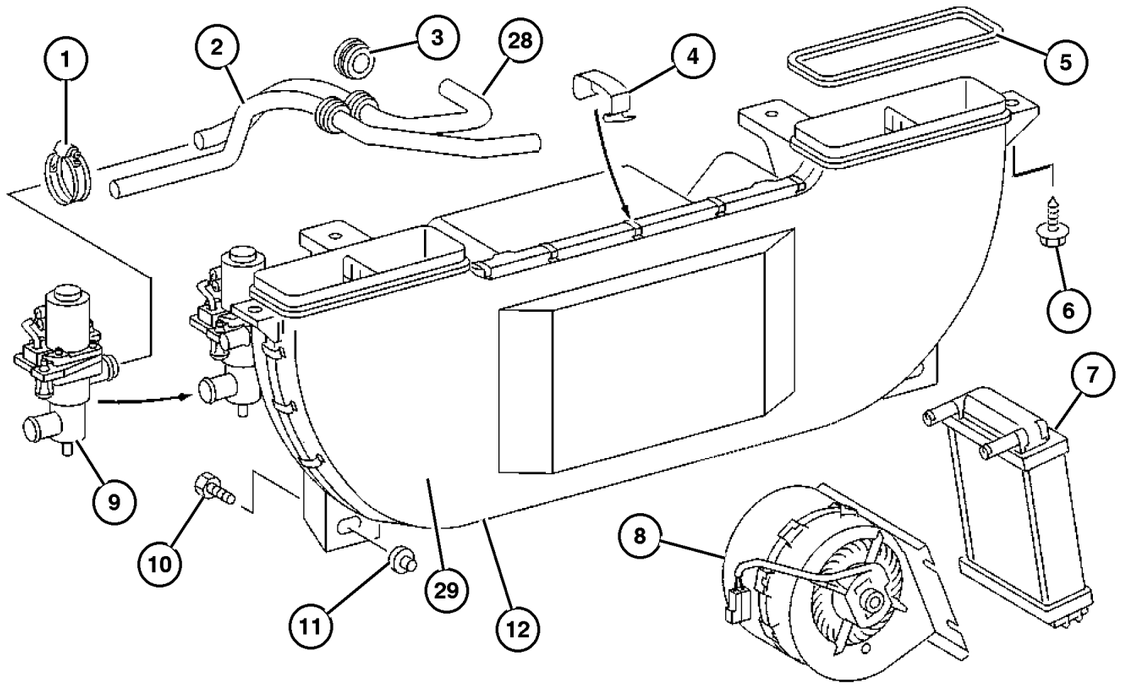

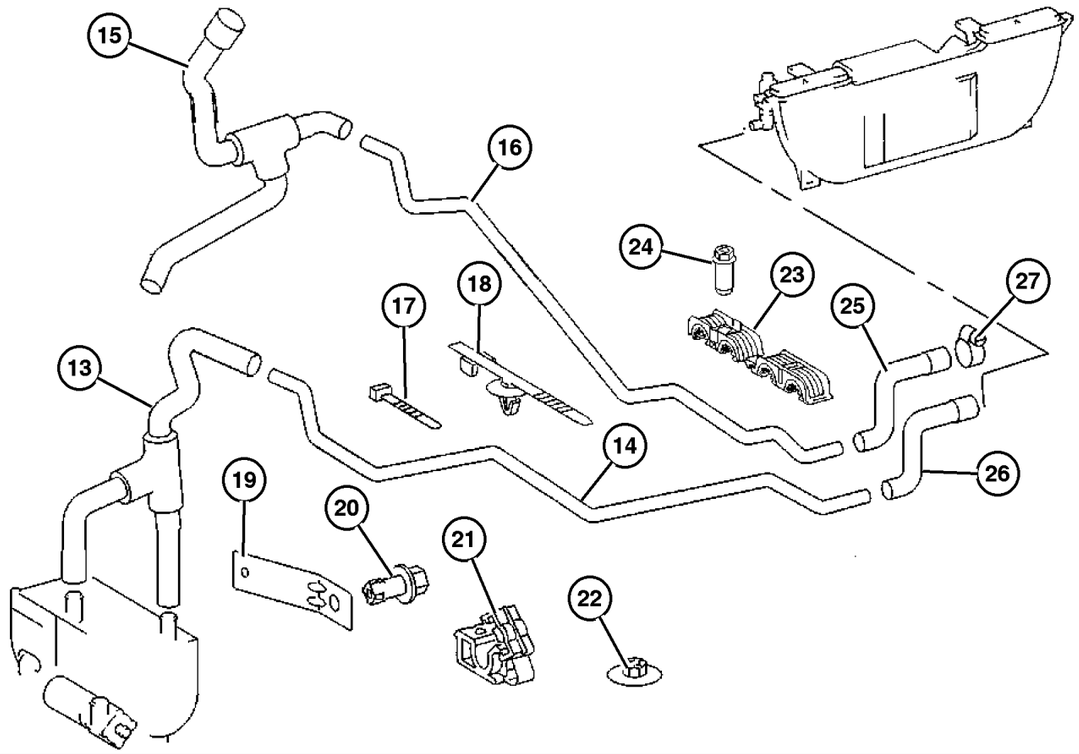

ITEM	PART NUMBER	QTY	LINE	SERIES	BODY	ENGINE	TRANS	TRIM	DESCRIPTION
	6104 580AA	1	2, 6		01, 02, 06	EX8			
		2	2, 6		11, 12, 14, 15, 16	EX8			
		2	2, 6		51, 52, 54, 55, 56	EX8			
		1	3, 7		02, 06	EX8			
		2	3, 7		12, 15, 16	EX8			
7									CORE, Heater
	5133 586AA	1	2, 6		11, 12, 14, 15, 16	EX8			
		1	2, 6		51, 52, 54, 55, 56	EX8			
		1	3, 7		12, 15, 16	EX8			
8									BLOWER
	5103 806AA	1	2, 6		11, 12, 14, 15, 16	EX8			
		1	2, 6		51, 52, 54, 55, 56	EX8			
		1	3, 7		12, 15, 16	EX8			
9									VALVE, Water
	5103 807AA	1	2, 6		11, 12, 14, 15, 16	EX8			
		1	2, 6		51, 52, 54, 55, 56	EX8			
		1	3, 7		12, 15, 16	EX8			
10									BOLT, Hex Head
	5126 227AA	2	2, 6		01, 02, 06	EX8			
		2	2, 6		11, 12, 14, 15, 16	EX8			

Refer to Model Legend Information Bookmark

AR = Use as required - = Non illustrated part # = New this model year

March 3, 2006

« RETURN TO GROUP INDEX

Heat Exchanger and Plumbing
Figure 024-250

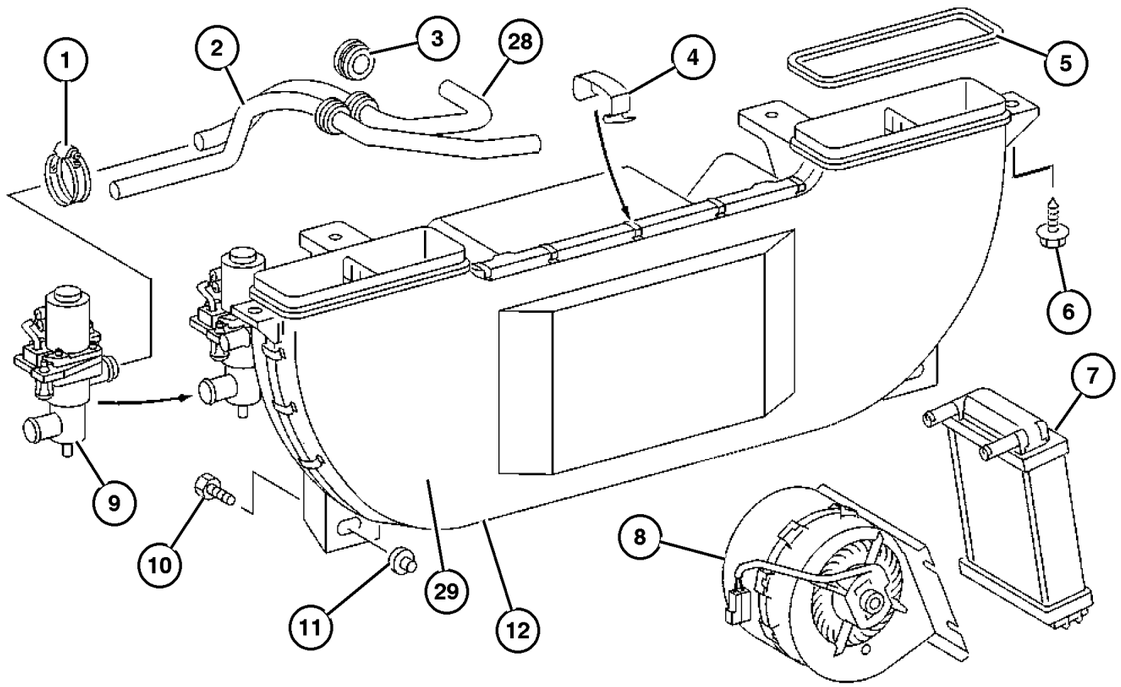

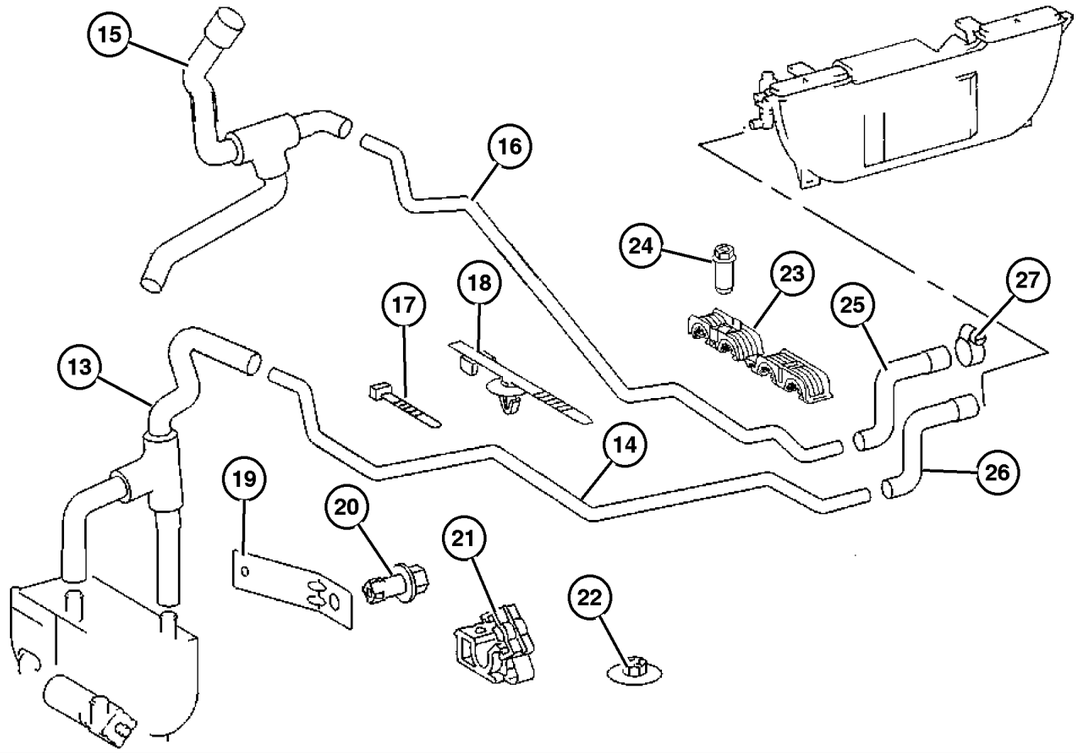

ITEM	PART NUMBER	QTY	LINE	SERIES	BODY	ENGINE	TRANS	TRIM	DESCRIPTION
		2	2, 6		51, 52, 54, 55, 56	EX8			
		2	3, 7		02, 06	EX8			
11									RIVET
	5133 486AA	2	2, 6		01, 02, 06	EX8			
		2	2, 6		11, 12, 14, 15, 16	EX8			
		2	2, 6		51, 52, 54, 55, 56	EX8			
		2	3, 7		02, 06	EX8			
		2	3, 7		12, 15, 16	EX8			
12									HEATER
	5124 700AA	1	2, 6		11, 12, 14, 15, 16	EX8			
		1	2, 6		51, 52, 54, 55, 56	EX8			
		1	3, 7		12, 15, 16	EX8			
13									HOSE, Auxiliary Heater
	5124 886AA	1	2, 6		11, 12, 14, 15, 16	EX8			
		1	2, 6		51, 52, 54, 55, 56	EX8			
		1	3, 7		12, 15, 16	EX8			
14									TUBE, Heater
	5124 826AA	1	2, 6		11, 12, 14, 15, 16	EX8			
		1	2, 6		51, 52, 54, 55, 56	EX8			
		1	3, 7		12, 15, 16	EX8			
15									HOSE

Refer to Model Legend Information Bookmark

Heat Exchanger and Plumbing
Figure 024-250

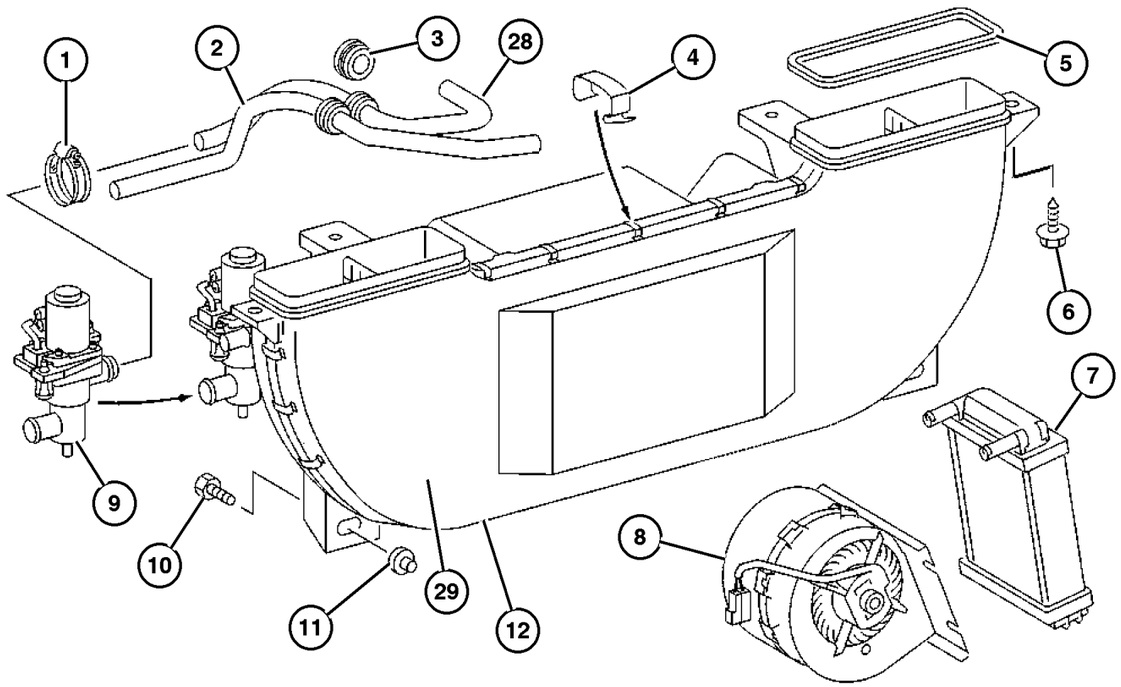

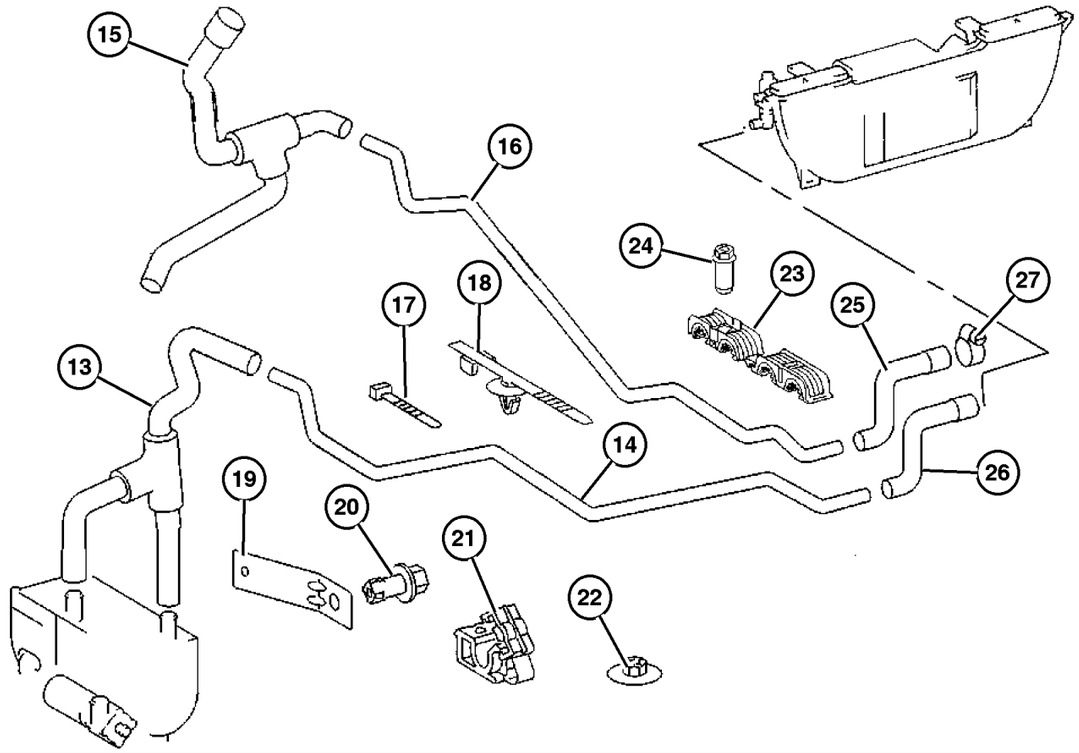

ITEM	PART NUMBER	QTY	LINE	SERIES	BODY	ENGINE	TRANS	TRIM	DESCRIPTION
	5124 837AA	1	2, 6		01, 02, 06	EX8			
		1	2, 6		11, 12, 14, 15, 16	EX8			
		1	2, 6		51, 52, 54, 55, 56	EX8			
		1	3, 7		02, 06	EX8			
		1	3, 7		12, 15, 16	EX8			
16									TUBE, Heater
	5124 820AA	1	2, 6		11, 12, 14, 15, 16	EX8			
		1	2, 6		51, 52, 54, 55, 56	EX8			
		1	3, 7		12, 15, 16	EX8			
17									STRAP, Tie
	5080 475AB	1	2, 6		01, 02, 06	EX8			
		1	2, 6		11, 12, 14, 15, 16	EX8			
		1	2, 6		51, 52, 54, 55, 56	EX8			
		1	3, 7		02, 06	EX8			
		1	3, 7		12, 15, 16	EX8			
18									STRAP, Tie
	5126 053AA	1	2, 6		01, 02, 06	EX8			
		1	2, 6		11, 12, 14, 15, 16	EX8			
		1	2, 6		51, 52, 54, 55, 56	EX8			
		1	3, 7		02, 06	EX8			
		1	3, 7		12, 15, 16	EX8			
19									BRACKET, Recirculating Pump

Refer to Model Legend Information Bookmark

AR = Use as required - = Non illustrated part # = New this model year

March 3, 2006

« RETURN TO GROUP INDEX

Heat Exchanger and Plumbing
Figure 024-250

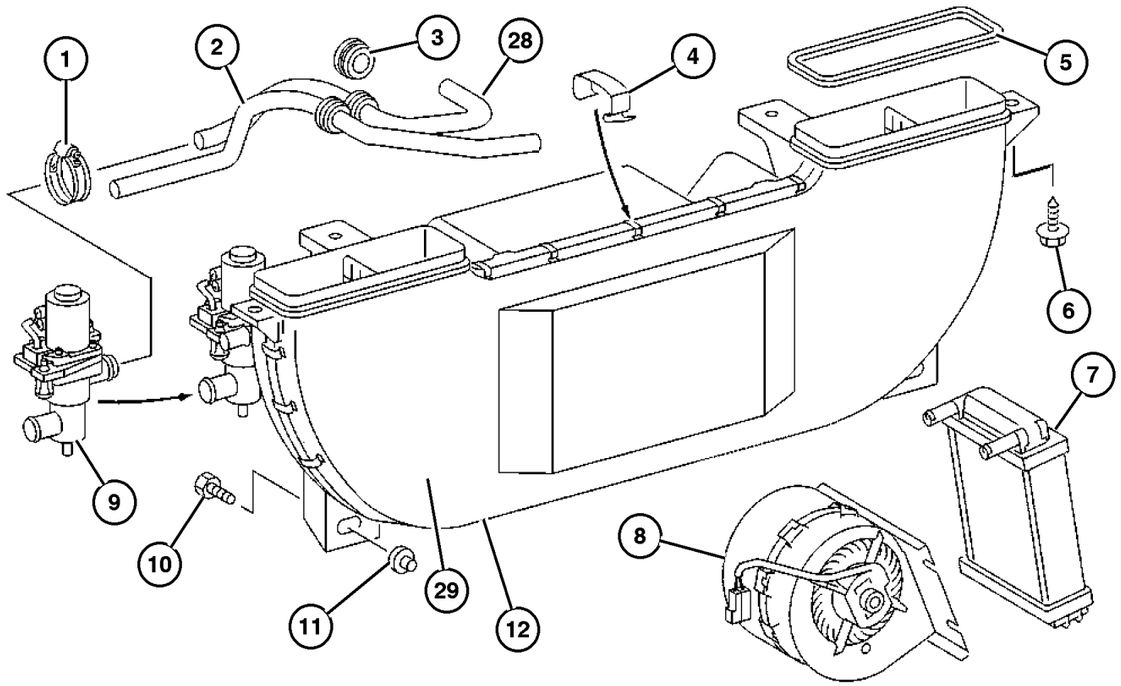

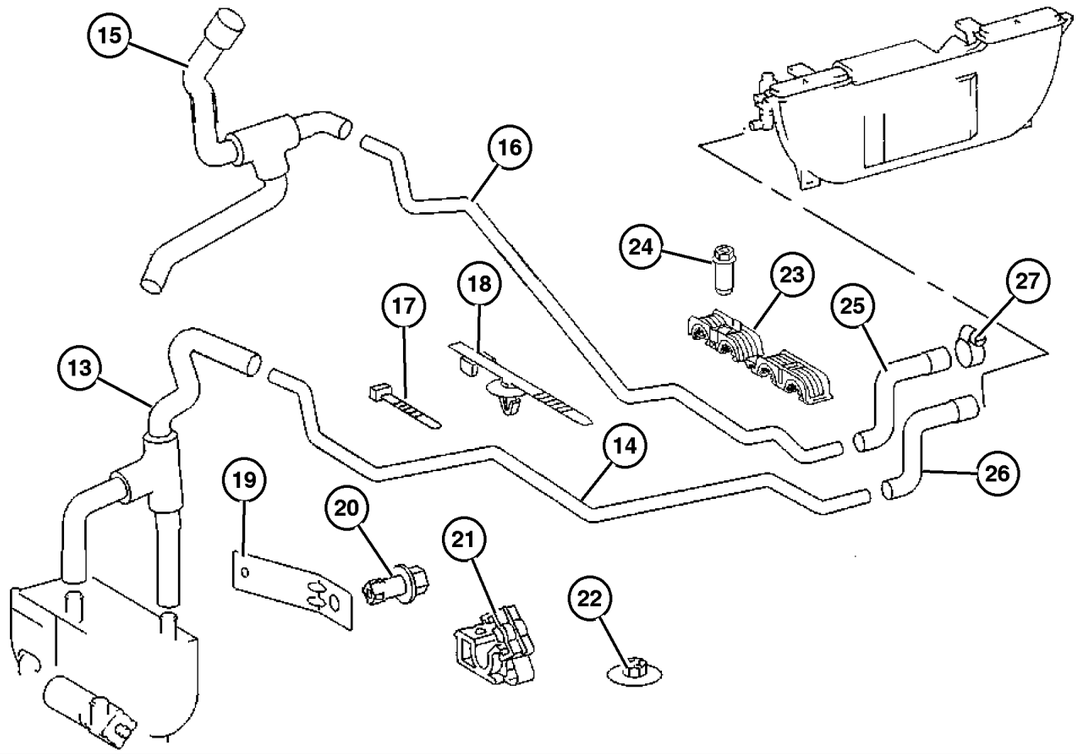

ITEM	PART NUMBER	QTY	LINE	SERIES	BODY	ENGINE	TRANS	TRIM	DESCRIPTION
	5124 814AA	1	2, 6		11, 12, 14, 15, 16	EX8			
		1	2, 6		51, 52, 54, 55, 56	EX8			
		1	3, 7		12, 15, 16	EX8			
20									NUT, Push In
	5125 594AA	1	2, 6		11, 12, 14, 15, 16	EX8			
		1	2, 6		51, 52, 54, 55, 56	EX8			
		1	3, 7		12, 15, 16	EX8			
21									CLAMP, Heater Hose
	5125 886AA	3	2, 6		11, 12, 14, 15, 16	EX8			
		3	2, 6		51, 52, 54, 55, 56	EX8			
		3	3, 7		12, 15, 16	EX8			
22									PLUG, Button
	5125 592AA	1	2, 6		01, 02, 06	EX8			
		1	2, 6		11, 12, 14, 15, 16	EX8			
		1	2, 6		51, 52, 54, 55, 56	EX8			
		1	3, 7		02, 06	EX8			
		1	3, 7		12, 15, 16	EX8			
23									CLAMP, Heater Hose
	5125 882AA	5	2, 6		11, 12, 14, 15, 16	EX8			
		5	2, 6		51, 52, 54, 55, 56	EX8			

Refer to Model Legend Information Bookmark

Heat Exchanger and Plumbing
Figure 024-250

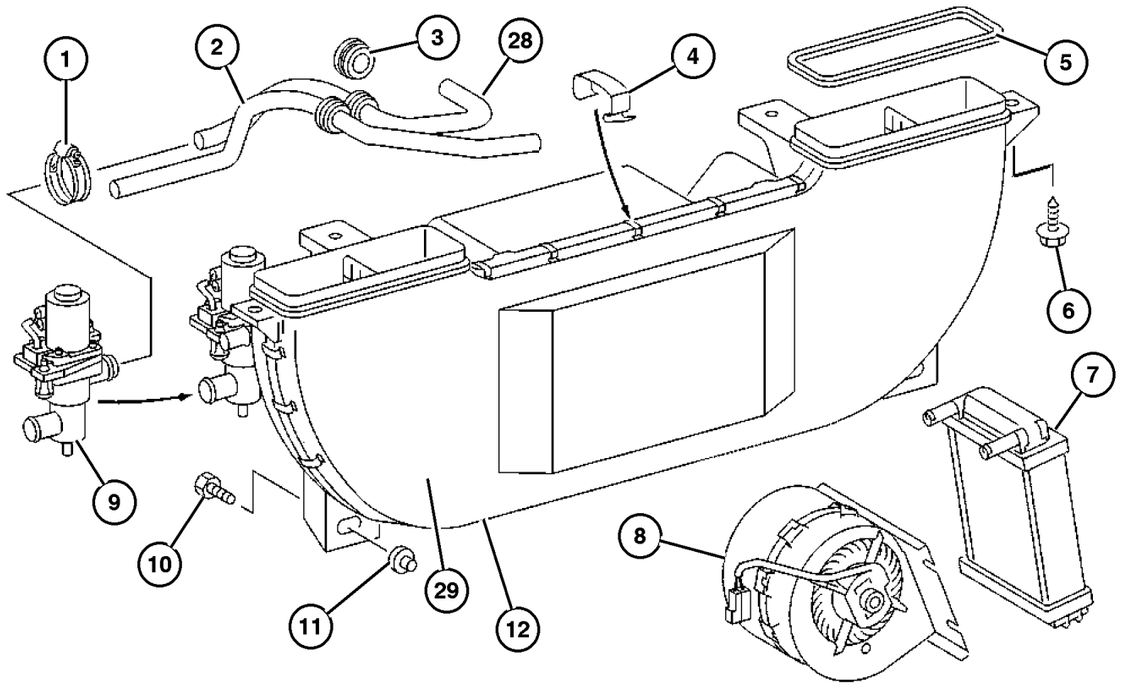

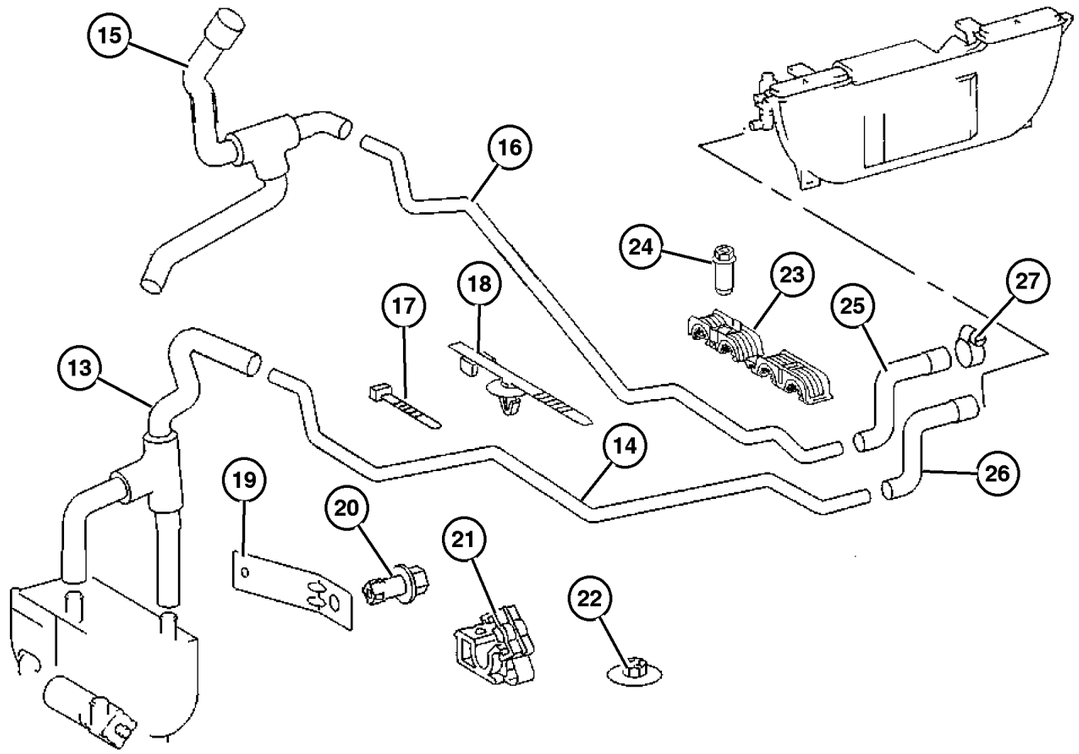

ITEM	PART NUMBER	QTY	LINE	SERIES	BODY	ENGINE	TRANS	TRIM	DESCRIPTION
		5	3, 7		12, 15, 16	EX8			
24									NUT, Heater
	6104 910AA	5	2, 6		11, 12, 14, 15, 16	EX8			
		5	2, 6		51, 52, 54, 55, 56	EX8			
		5	3, 7		12, 15, 16	EX8			
		2	3, 7		12, 15	EX8			
25									HOSE, Heater
	5124 841AA	1	2, 6		11, 12, 14, 15, 16	EX8			
		1	2, 6		51, 52, 54, 55, 56	EX8			
		1	3, 7		12, 15, 16	EX8			
26									HOSE, Heater
	5124 885AA	1	2, 6		11, 12, 14, 15, 16	EX8			
		1	2, 6		51, 52, 54, 55, 56	EX8			
		1	3, 7		12, 15, 16	EX8			
27									CLAMP
	6104 780AA	1	2, 6		01, 02, 06	EX8			
		1	2, 6		11, 12, 14, 15, 16	EX8			
		1	2, 6		51, 52, 54, 55, 56	EX8			
		1	3, 7		02, 06	EX8			
		1	3, 7		12, 15, 16	EX8			
28	5133 889AA	1	3, 7		12, 15, 16	EX8			HOSE, Heater
29									COVER

Refer to Model Legend Information Bookmark

AR = Use as required - = Non illustrated part # = New this model year

March 3, 2006

« RETURN TO GROUP INDEX

Heat Exchanger and Plumbing
Figure 024-250

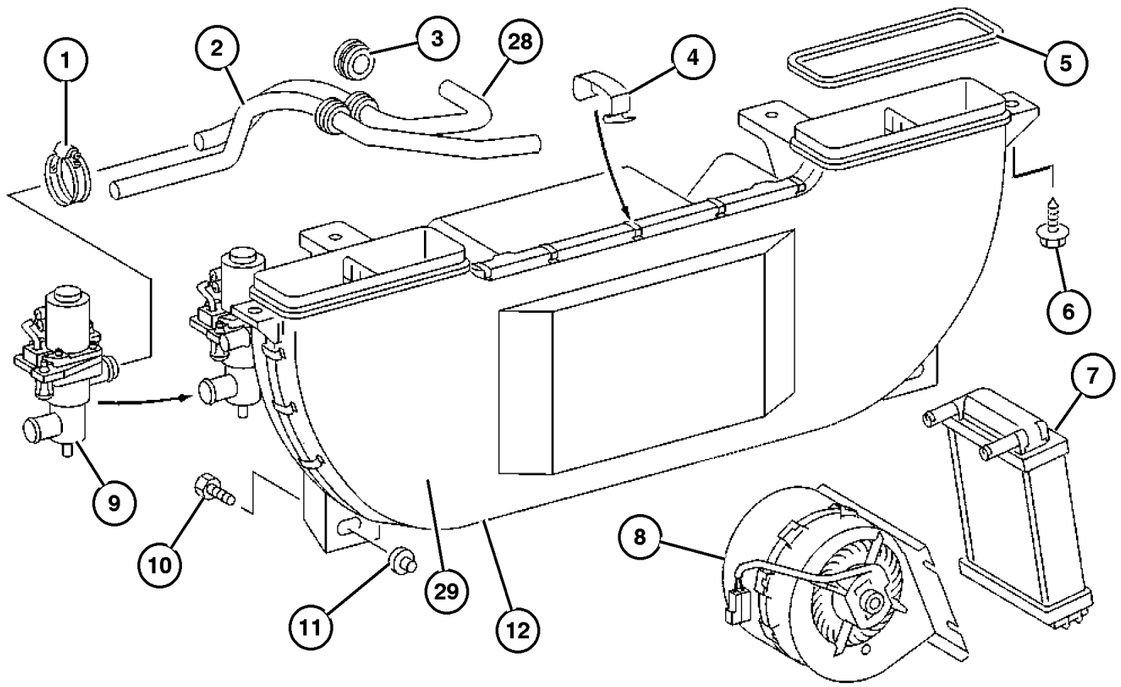

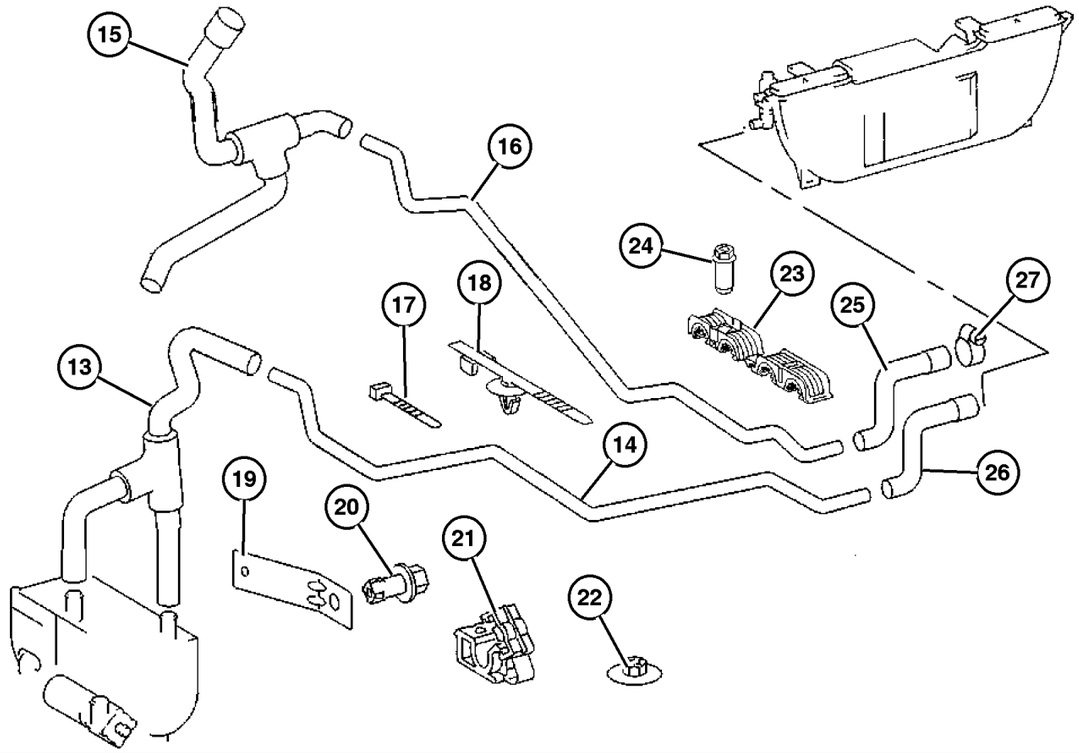

ITEM	PART NUMBER	QTY	LINE	SERIES	BODY	ENGINE	TRANS	TRIM	DESCRIPTION
	5133 591AA	1	2, 6		11, 12, 14, 15, 16	EX8			
		1	2, 6		51, 52, 54, 55, 56	EX8			
		1	3, 7		12, 15, 16	EX8			

Refer to Model Legend Information Bookmark

AR = Use as required - = Non illustrated part # = New this model year

March 3, 2006

« RETURN TO GROUP INDEX

Plumbing, Heater
Figure 024-260

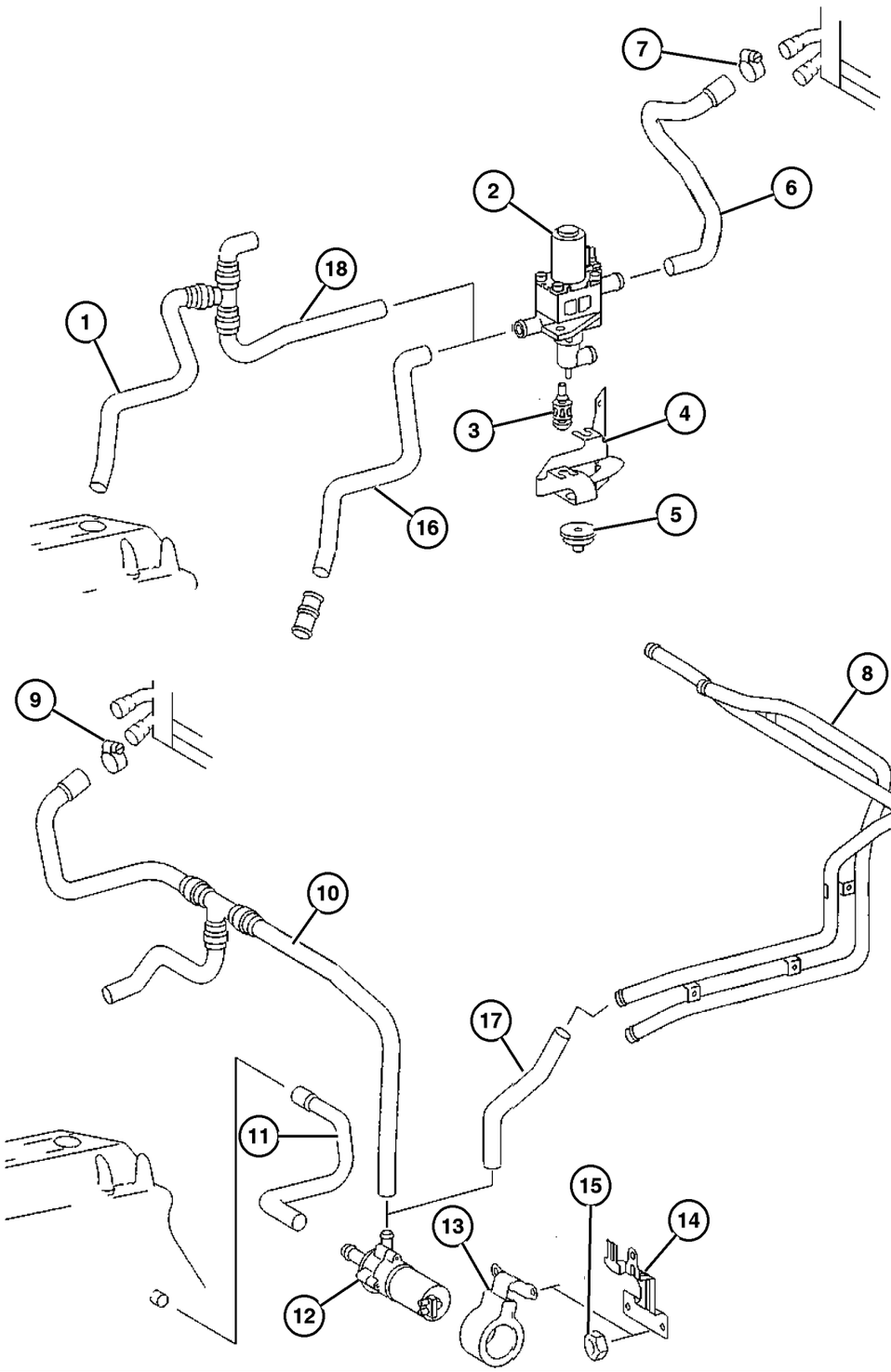

ITEM	PART NUMBER	QTY	LINE	SERIES	BODY	ENGINE	TRANS	TRIM	DESCRIPTION
1									HOSE
	5104 488AA	1	2, 6		01, 02, 06	EX8			
		1	2, 6		11, 12, 14, 15, 16	EX8			
		1	2, 6		51, 52, 54, 55, 56	EX8			
		1	3, 7		02, 06	EX8			
		1	3, 7		12, 15, 16	EX8			
2									VALVE, Water
	5103 770AA	1	2, 6		01, 02, 06	EX8			
		1	2, 6		11, 12, 14, 15, 16	EX8			
		1	2, 6		51, 52, 54, 55, 56	EX8			
		1	3, 7		02, 06	EX8			
		1	3, 7		12, 15, 16	EX8			
3									GROMMET
	5096 558AA	2	2, 6		01, 02, 06	EX8			
		2	2, 6		11, 12, 14, 15, 16	EX8			
		2	2, 6		51, 52, 54, 55, 56	EX8			
		2	3, 7		02, 06	EX8			
		2	3, 7		12, 15, 16	EX8			
4									BRACKET, Recirculating Pump
	5124 791AA	1	2, 6		01, 02, 06	EX8			
		1	2, 6		11, 12, 14, 15, 16	EX8			
		1	2, 6		51, 52, 54, 55, 56	EX8			

Refer to Model Legend Information Bookmark

Plumbing, Heater
Figure 024-260

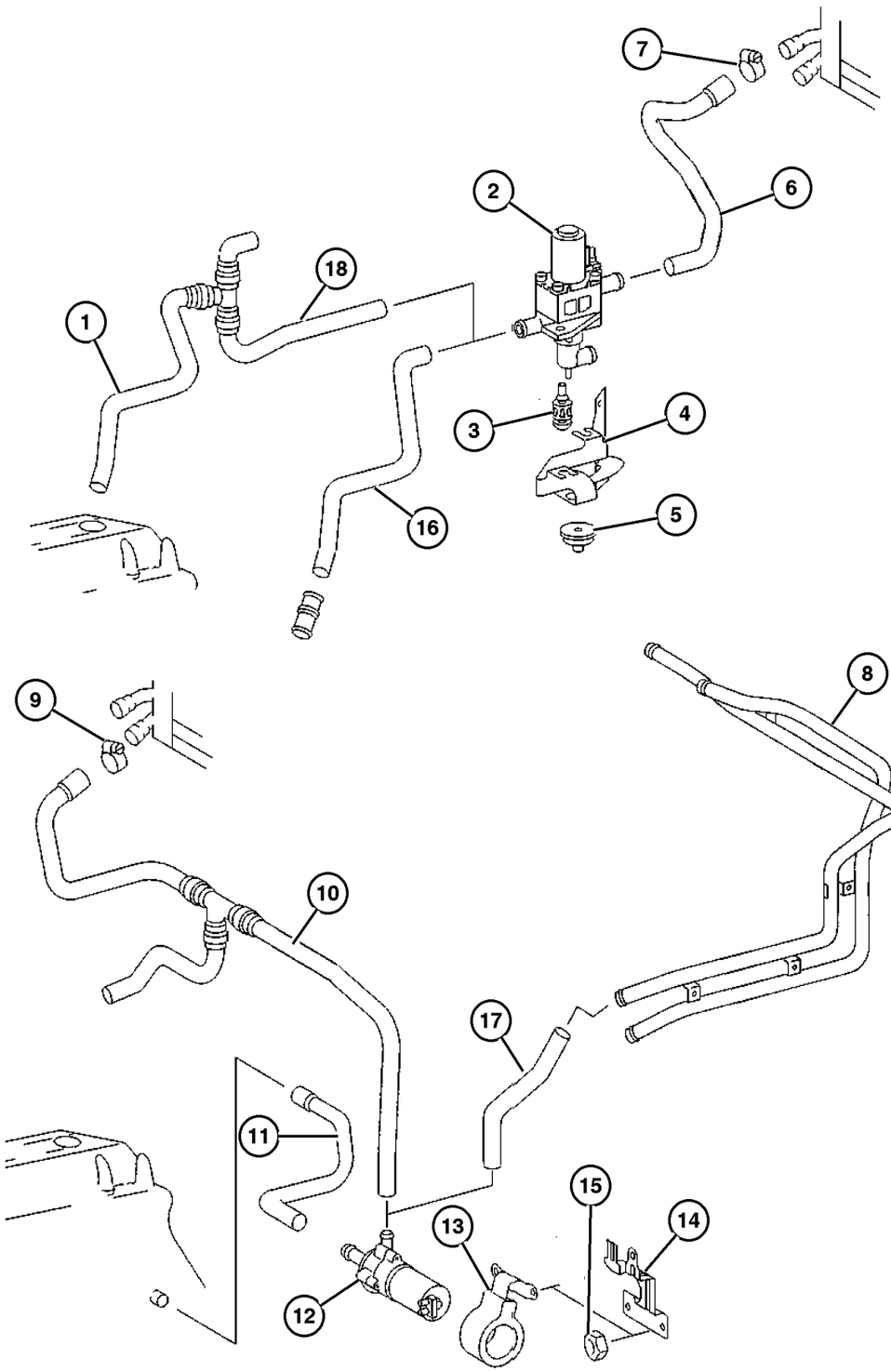

ITEM	PART NUMBER	QTY	LINE	SERIES	BODY	ENGINE	TRANS	TRIM	DESCRIPTION
		1	3, 7		02, 06	EX8			
		1	3, 7		12, 15, 16	EX8			
5									BUMPER, Rubber
	5125 504AA	1	2, 6		01, 02, 06	EX8			
		1	2, 6		11, 12, 14, 15, 16	EX8			
		1	2, 6		51, 52, 54, 55, 56	EX8			
		1	3, 7		02, 06	EX8			
		1	3, 7		12, 15, 16	EX8			
6									HOSE
	5124 846AA	1	2, 6		01, 02, 06	EX8			
		1	2, 6		11, 12, 14, 15, 16	EX8			
		1	2, 6		51, 52, 54, 55, 56	EX8			
		1	3, 7		02, 06	EX8			
		1	3, 7		12, 15, 16	EX8			
7									CLAMP, CLAMP
	5126 287AA	11	2, 6		01, 02, 06	EX8			
		11	2, 6		11, 12, 14, 15, 16	EX8			
		11	2, 6		51, 52, 54, 55, 56	EX8			
		11	3, 7		02, 06	EX8			
		11	3, 7		12, 15, 16	EX8			
8									TUBE, Heater
	5124 644AA	1	2, 6		01, 02, 06	EX8			
		1	2, 6		11, 12, 14, 15, 16	EX8			

Refer to Model Legend Information Bookmark

AR = Use as required - = Non illustrated part # = New this model year

March 3, 2006

« RETURN TO GROUP INDEX

Plumbing, Heater
Figure 024-260

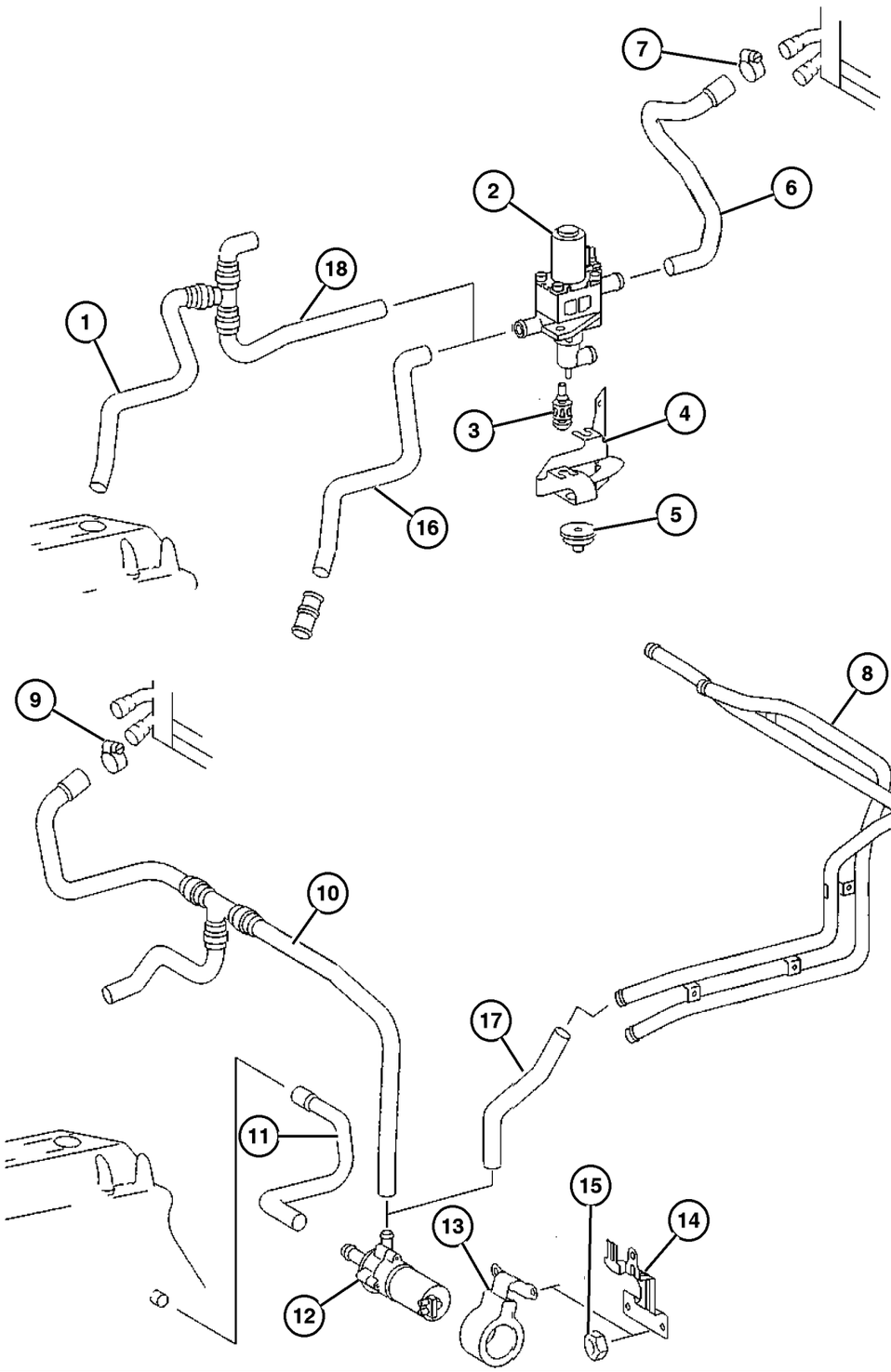

ITEM	PART NUMBER	QTY	LINE	SERIES	BODY	ENGINE	TRANS	TRIM	DESCRIPTION
		1	2, 6		51, 52, 54, 55, 56	EX8			
		1	3, 7		02, 06	EX8			
		1	3, 7		12, 15, 16	EX8			
9	5104 681AA	3	2, 6		01, 02, 06	EX8			CLAMP, Heater Hose
		3	2, 6		11, 12, 14, 15, 16	EX8			
		3	2, 6		51, 52, 54, 55, 56	EX8			
		3	3, 7		02, 06	EX8			
		3	3, 7		12, 15, 16	EX8			
10	5124 842AA	1	2, 6		01, 02, 06	EX8			HOSE
		1	2, 6		11, 12, 14, 15, 16	EX8			
		1	2, 6		51, 52, 54, 55, 56	EX8			
		1	3, 7		02, 06	EX8			
		1	3, 7		12, 15, 16	EX8			
11	5104 481AA	1	2, 6		01, 02, 06	EX8			HOSE
		1	2, 6		11, 12, 14, 15, 16	EX8			
		1	2, 6		51, 52, 54, 55, 56	EX8			
		1	3, 7		02, 06	EX8			
		1	3, 7		12, 15, 16	EX8			
12	5098 398AA	1	2, 6		01, 02, 06	EX8			PUMP, Recirculating

Refer to Model Legend Information Bookmark

AR = Use as required - = Non illustrated part # = New this model year

March 3, 2006

« RETURN TO GROUP INDEX

« »

Plumbing, Heater
Figure 024-260

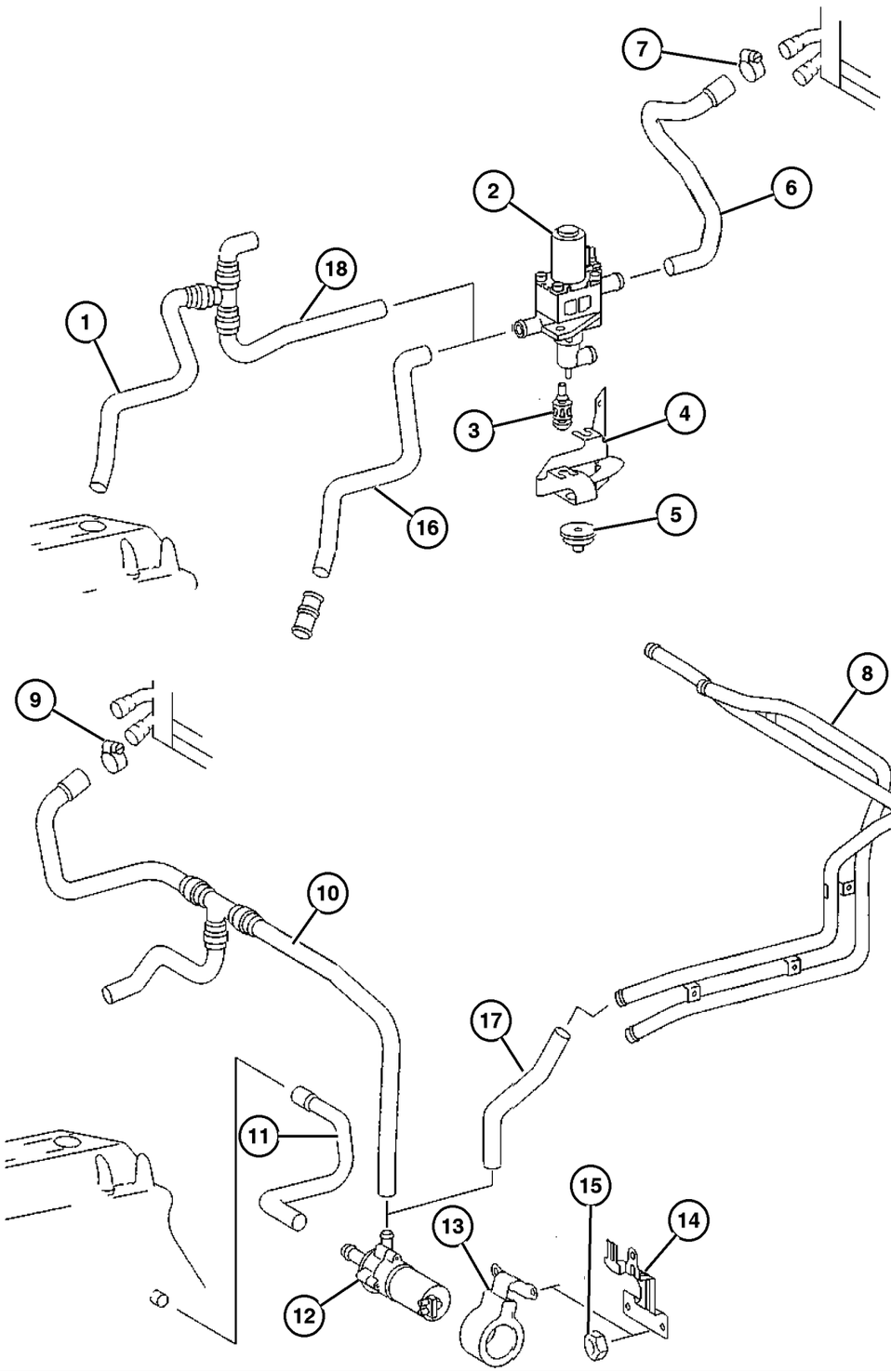

ITEM	PART NUMBER	QTY	LINE	SERIES	BODY	ENGINE	TRANS	TRIM	DESCRIPTION
		1	2, 6		11, 12, 14, 15, 16	EX8			
		1	2, 6		51, 52, 54, 55, 56	EX8			
		1	3, 7		02, 06	EX8			
		1	3, 7		12, 15, 16	EX8			
13									BRACKET
	5124 629AA	1	2, 6		01, 02, 06	EX8			
		1	2, 6		11, 12, 14, 15, 16	EX8			
		1	2, 6		51, 52, 54, 55, 56	EX8			
		1	3, 7		02, 06	EX8			
		1	3, 7		12, 15, 16	EX8			
14									BRACKET, Recirculating Pump
	5124 808AA	1	2, 6		01, 02, 06	EX8			
		1	2, 6		11, 12, 14, 15, 16	EX8			
		1	2, 6		51, 52, 54, 55, 56	EX8			
		1	3, 7		02, 06	EX8			
		1	3, 7		12, 15, 16	EX8			
15	5127 449AA	1	2, 6		01, 02, 06	EX8			NUT, M6x1.00
16									HOSE
	5124 844AA	1	2, 6		01, 02, 06	EX8			
		1	2, 6		11, 12, 14, 15, 16	EX8			
		1	2, 6		51, 52, 54, 55, 56	EX8			
		1	3, 7		02, 06	EX8			

Refer to Model Legend Information Bookmark

AR = Use as required - = Non illustrated part # = New this model year

March 3, 2006

Plumbing, Heater
Figure 024-260

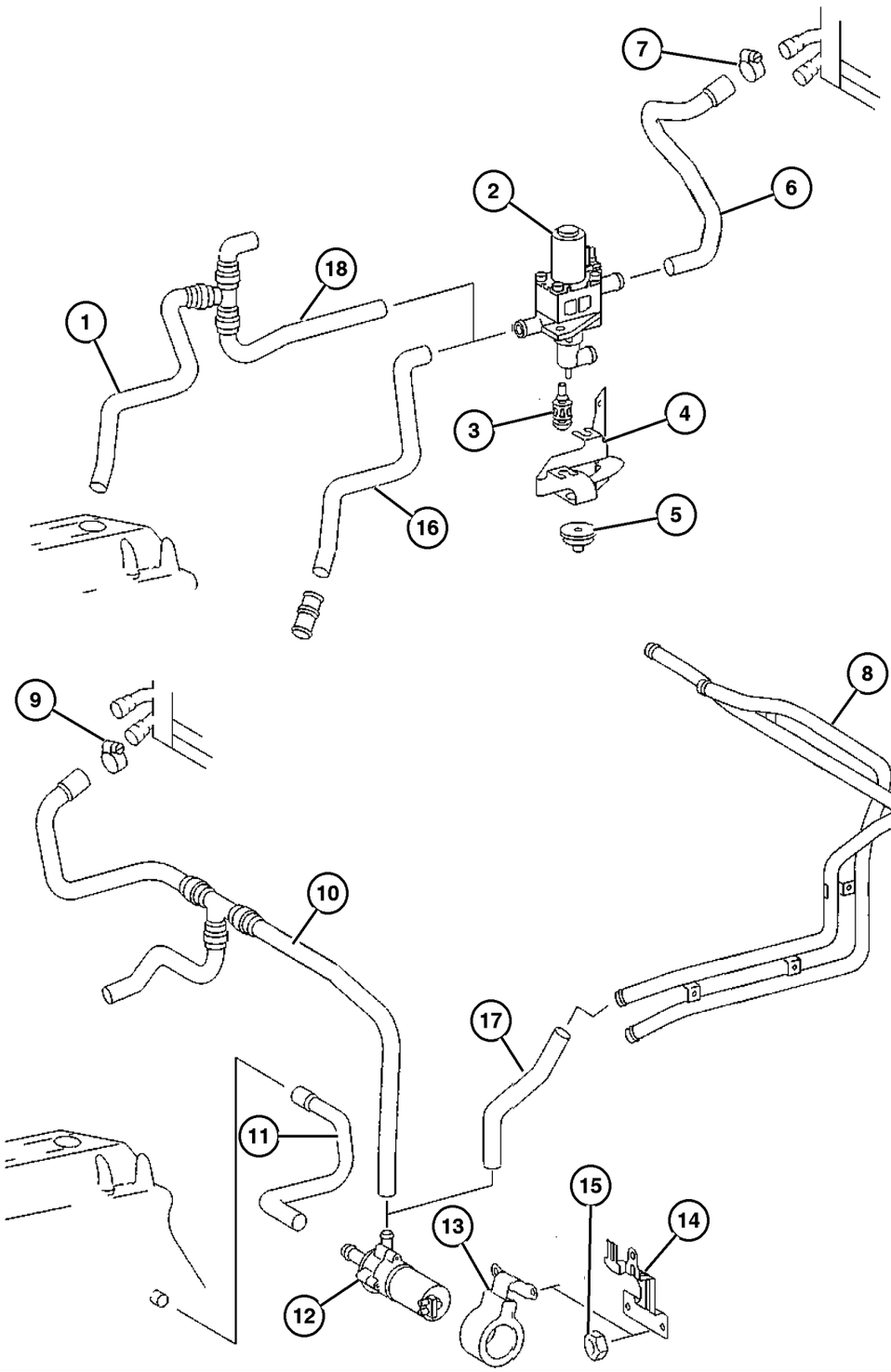

ITEM	PART NUMBER	QTY	LINE	SERIES	BODY	ENGINE	TRANS	TRIM	DESCRIPTION
		1	3, 7		12, 15, 16	EX8			
17	5124 848AA	1	2, 6		01, 02, 06	EX8			HOSE
		1	2, 6		11, 12, 14, 15, 16	EX8			
		1	2, 6		51, 52, 54, 55, 56	EX8			
		1	3, 7		02, 06	EX8			
		1	3, 7		12, 15, 16	EX8			
18	5125 981AA	1	2, 6		01, 02, 06	EX8			HOSE, Flexible Exhaust, Supplemental Heater
		1	2, 6		11, 12, 14, 15, 16	EX8			
		1	2, 6		51, 52, 54, 55, 56	EX8			
		1	3, 7		02, 06	EX8			
		1	3, 7		12, 15, 16	EX8			

Refer to Model Legend Information Bookmark

AR = Use as required - = Non illustrated part # = New this model year

March 3, 2006

« RETURN TO GROUP INDEX

«

Plumbing, Heater with Auxiliary warm water Heater
Figure 024-265

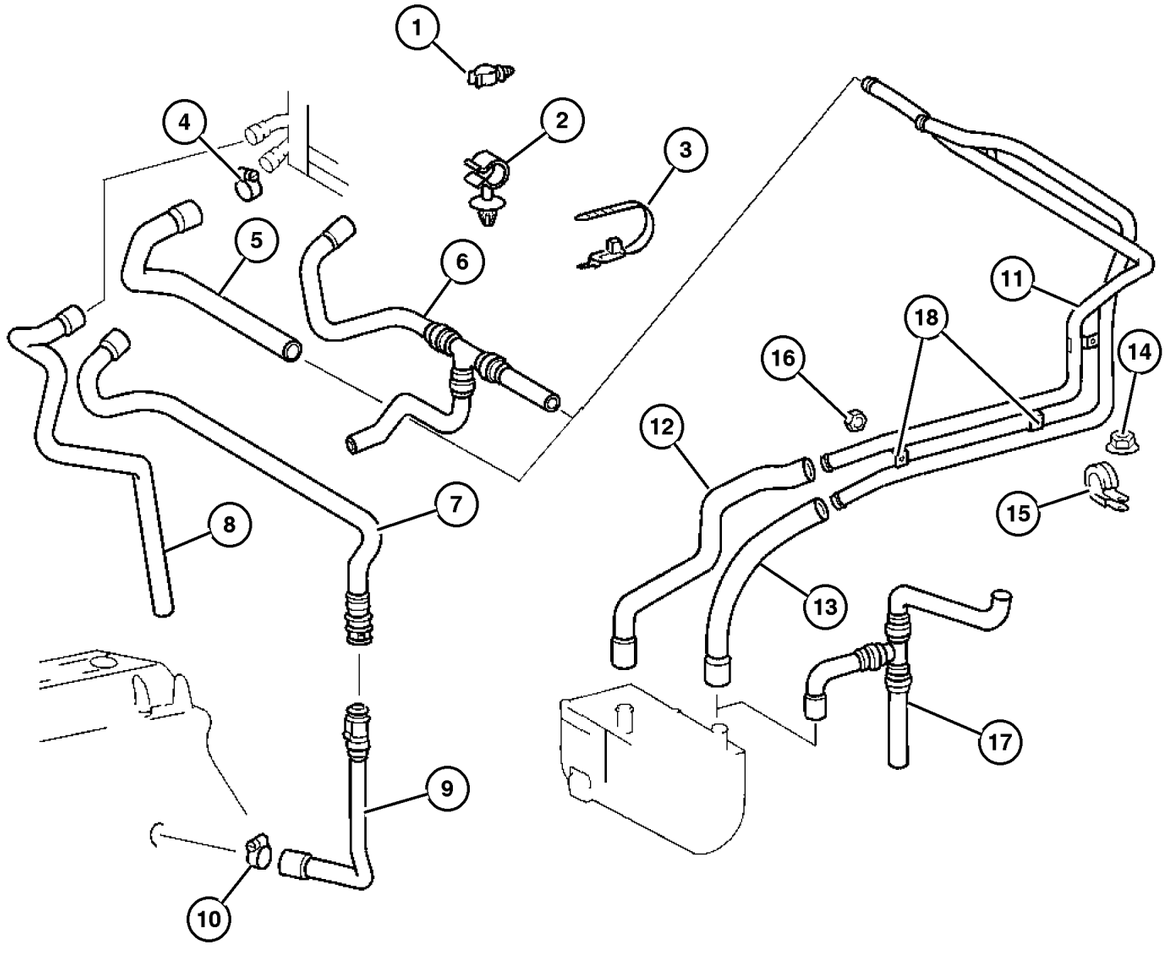

ITEM	PART NUMBER	QTY	LINE	SERIES	BODY	ENGINE	TRANS	TRIM	DESCRIPTION
1									CLIP, Hose
	5124 806AA	1	2, 6		01, 02, 06	EX8			
		1	2, 6		11, 12, 14, 15, 16	EX8			
		1	2, 6		51, 52, 54, 55, 56	EX8			
		1	3, 7		02, 06	EX8			
		1	3, 7		12, 15, 16	EX8			
2									CLIP, Hose
	5119 332AA	1	2, 6		01, 02, 06	EX8			
		1	2, 6		11, 12, 14, 15, 16	EX8			
		1	2, 6		51, 52, 54, 55, 56	EX8			
		3	3, 7		02, 06	EX8			
		3	3, 7		12, 15, 16	EX8			
3									STRAP AND CLIP
	5133 297AA	2	2, 6		01, 02, 06	EX8			
		2	2, 6		11, 12, 14, 15, 16	EX8			
		2	2, 6		51, 52, 54, 55, 56	EX8			
		2	3, 7		02, 06	EX8			
		2	3, 7		12, 15, 16	EX8			
4									CLAMP, Heater Hose
	5104 681AA	3	2, 6		01, 02, 06	EX8			
		3	2, 6		11, 12, 14, 15, 16	EX8			
		3	2, 6		51, 52, 54, 55, 56	EX8			

Refer to Model Legend Information Bookmark

Plumbing, Heater with Auxiliary warm water Heater
Figure 024-265

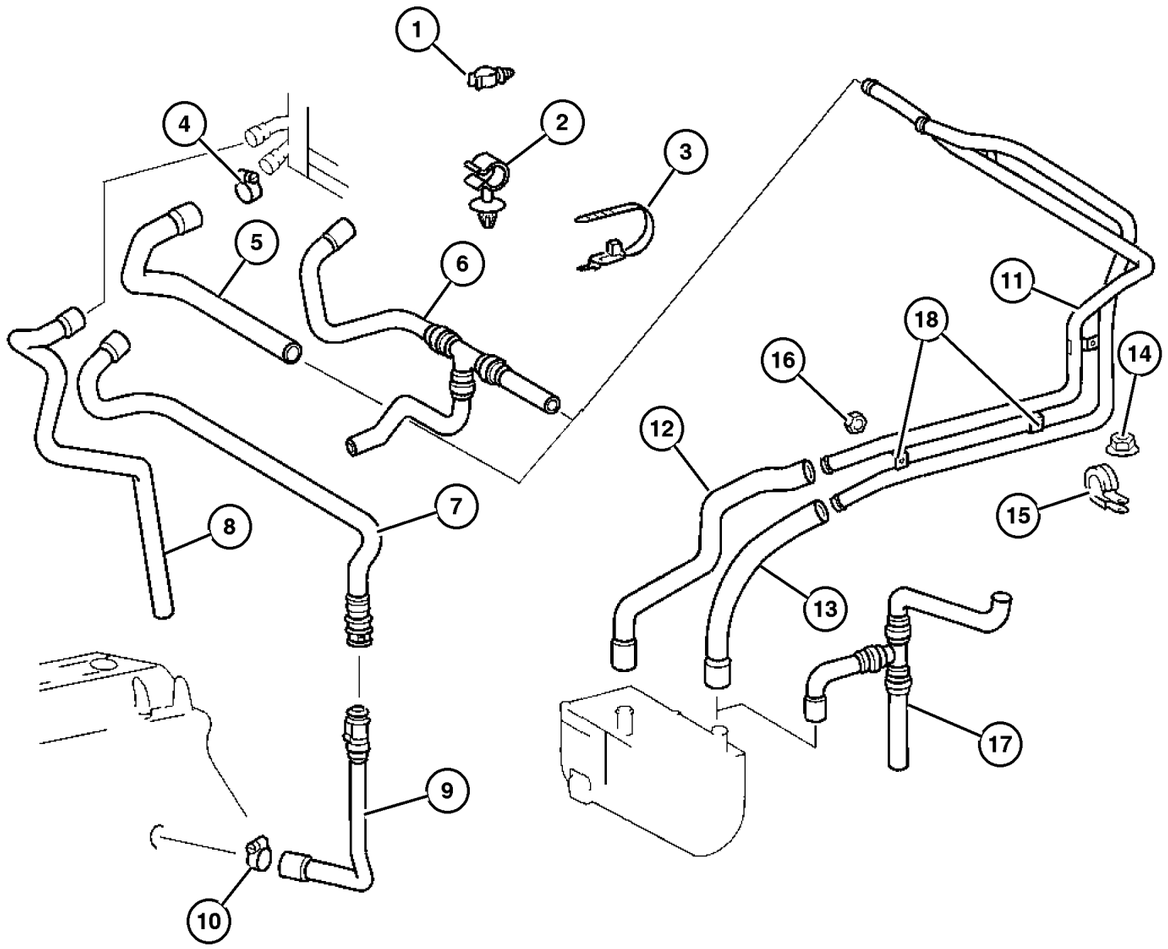

ITEM	PART NUMBER	QTY	LINE	SERIES	BODY	ENGINE	TRANS	TRIM	DESCRIPTION
		3	3, 7		02, 06	EX8			
		3	3, 7		12, 15, 16	EX8			
5									HOSE
	5124 854AA	1	2, 6		01, 02, 06	EX8			
		1	2, 6		11, 12, 14, 15, 16	EX8			
		1	2, 6		51, 52, 54, 55, 56	EX8			
		1	3, 7		02, 06	EX8			
		1	3, 7		12, 15, 16	EX8			
6									HOSE
	5124 837AA	1	2, 6		01, 02, 06	EX8			
		1	2, 6		11, 12, 14, 15, 16	EX8			
		1	2, 6		51, 52, 54, 55, 56	EX8			
		1	3, 7		02, 06	EX8			
		1	3, 7		12, 15, 16	EX8			
7									HOSE
	5104 481AA	1	2, 6		01, 02, 06	EX8			
		1	2, 6		11, 12, 14, 15, 16	EX8			
		1	2, 6		51, 52, 54, 55, 56	EX8			
		1	3, 7		02, 06	EX8			
		1	3, 7		12, 15, 16	EX8			
8									HOSE
	5104 489AA	1	2, 6		01, 02, 06	EX8			
		1	2, 6		11, 12, 14, 15, 16	EX8			

Refer to Model Legend Information Bookmark

AR = Use as required - = Non illustrated part # = New this model year

March 3, 2006

« RETURN TO GROUP INDEX

Plumbing, Heater with Auxiliary warm water Heater
Figure 024-265

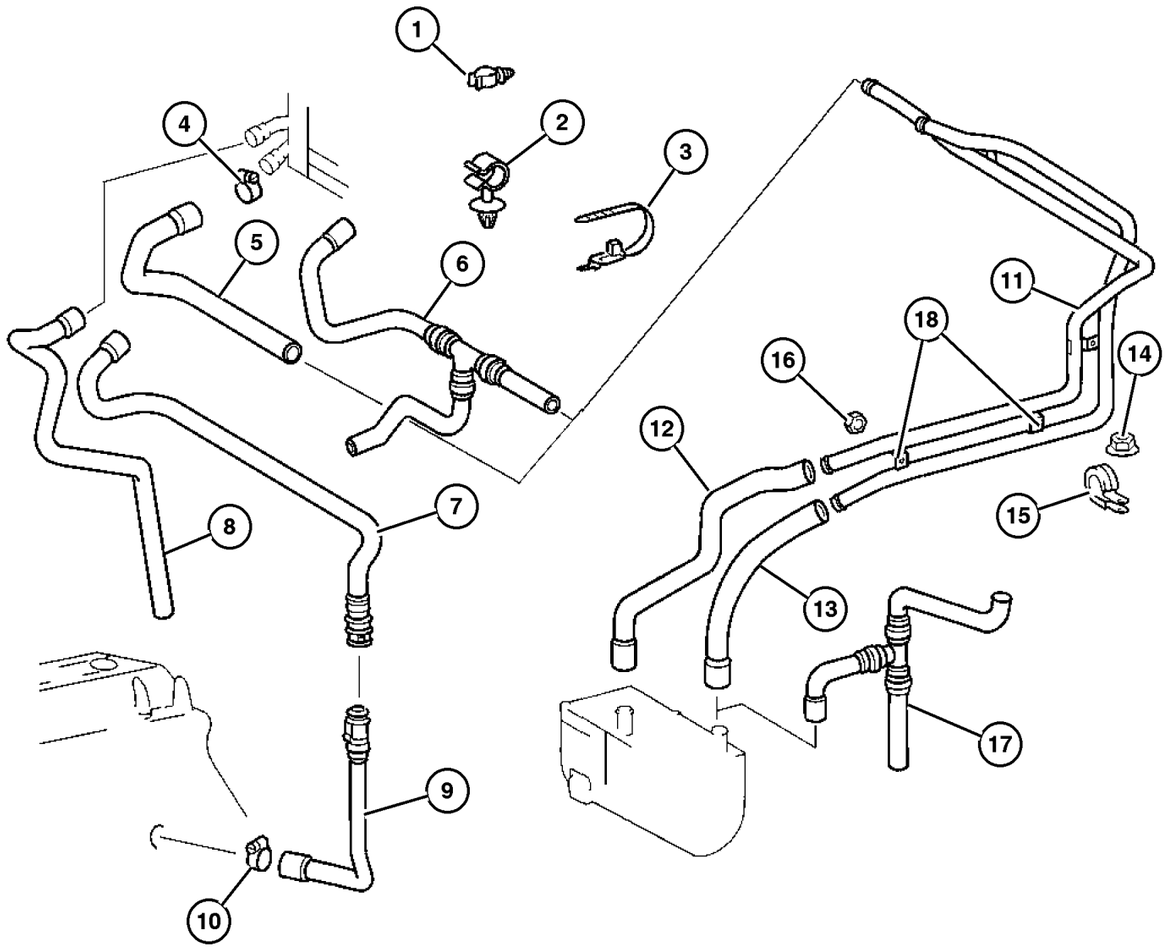

ITEM	PART NUMBER	QTY	LINE	SERIES	BODY	ENGINE	TRANS	TRIM	DESCRIPTION
		1	2, 6		51, 52, 54, 55, 56	EX8			
		1	3, 7		02, 06	EX8			
		1	3, 7		12, 15, 16	EX8			
9	5124 728AA	1	2, 6		01, 02, 06	EX8			HOSE, HOSE-WATER
		1	2, 6		11, 12, 14, 15, 16	EX8			
		1	3, 7		02, 06	EX8			
		1	3, 7		12, 15, 16	EX8			
10	5126 287AA	11	2, 6		01, 02, 06	EX8			CLAMP, CLAMP
		11	2, 6		11, 12, 14, 15, 16	EX8			
		11	2, 6		51, 52, 54, 55, 56	EX8			
		11	3, 7		02, 06	EX8			
		11	3, 7		12, 15, 16	EX8			
11	5124 644AA	1	2, 6		01, 02, 06	EX8			TUBE, Heater
		1	2, 6		11, 12, 14, 15, 16	EX8			
		1	2, 6		51, 52, 54, 55, 56	EX8			
		1	3, 7		02, 06	EX8			
		1	3, 7		12, 15, 16	EX8			
12	5124 850AA	1	2, 6		01, 02, 06	EX8			HOSE
		1	2, 6		11, 12, 14, 15, 16	EX8			

Refer to Model Legend Information Bookmark

AR = Use as required - = Non illustrated part # = New this model year

March 3, 2006

« RETURN TO GROUP INDEX

Plumbing, Heater with Auxiliary warm water Heater
Figure 024-265

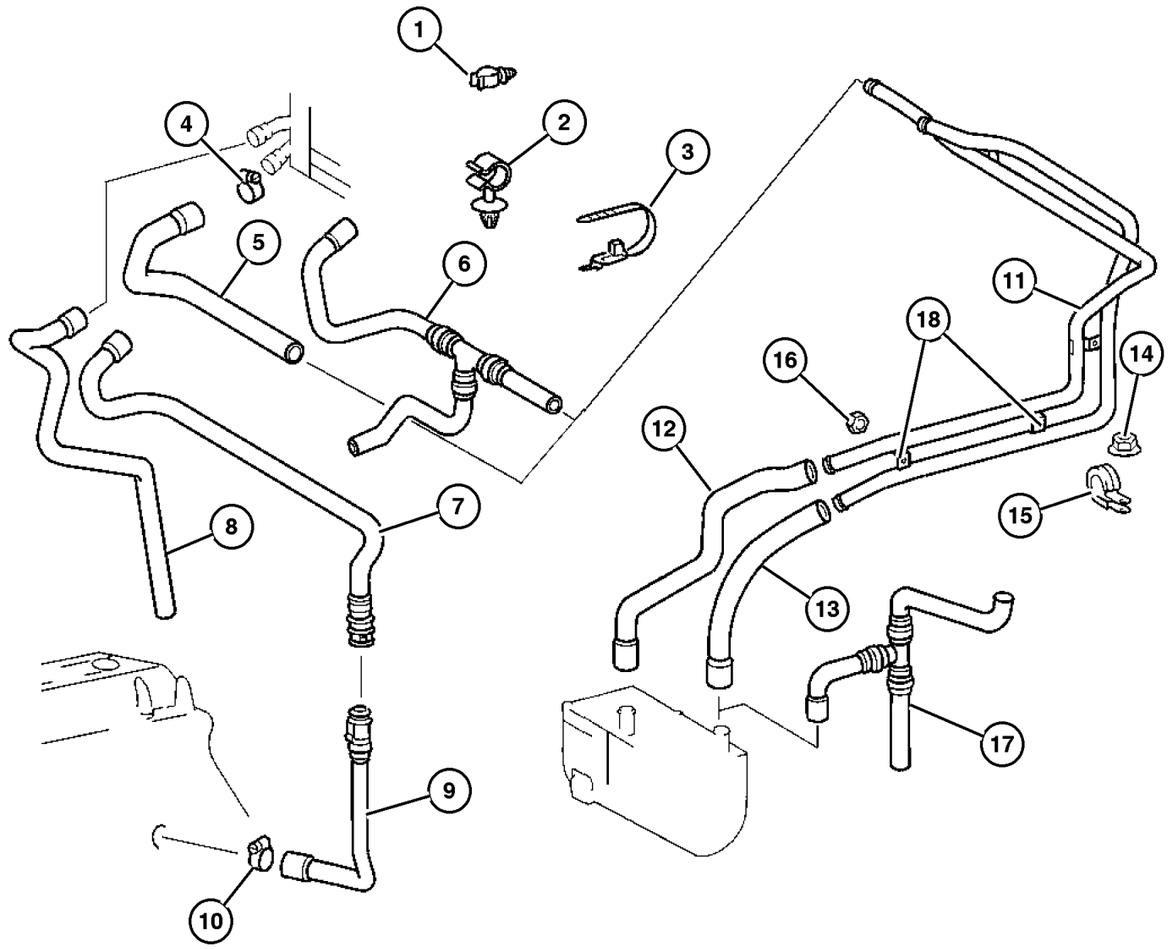

ITEM	PART NUMBER	QTY	LINE	SERIES	BODY	ENGINE	TRANS	TRIM	DESCRIPTION
		1	2, 6		51, 52, 54, 55, 56	EX8			
		1	3, 7		02, 06	EX8			
		1	3, 7		12, 15, 16	EX8			
13									HOSE
	5124 852AA	1	2, 6		11, 12, 14, 15, 16	EX8			
		1	2, 6		51, 52, 54, 55, 56	EX8			
		1	3, 7		02, 06	EX8			
		1	3, 7		12, 15, 16	EX8			
14									NUT, Hex
	6104 911AA	1	2, 6		01, 02, 06	EX8			
		1	2, 6		11, 12, 14, 15, 16	EX8			
		1	2, 6		51, 52, 54, 55, 56	EX8			
		1	3, 7		02, 06	EX8			
		1	3, 7		12, 15, 16	EX8			
15									CLAMP, Air Conditioning Piping
	5126 284AA	1	2, 6		01, 02, 06	EX8			
		1	2, 6		11, 12, 14, 15, 16	EX8			
		1	2, 6		51, 52, 54, 55, 56	EX8			
		1	3, 7		02, 06	EX8			
		1	3, 7		12, 15, 16	EX8			
16									NUT, Hex, M6
	5096 978AA	3	2, 6		01, 02, 06	EX8			

Refer to Model Legend Information Bookmark

Plumbing, Heater with Auxiliary warm water Heater
Figure 024-265

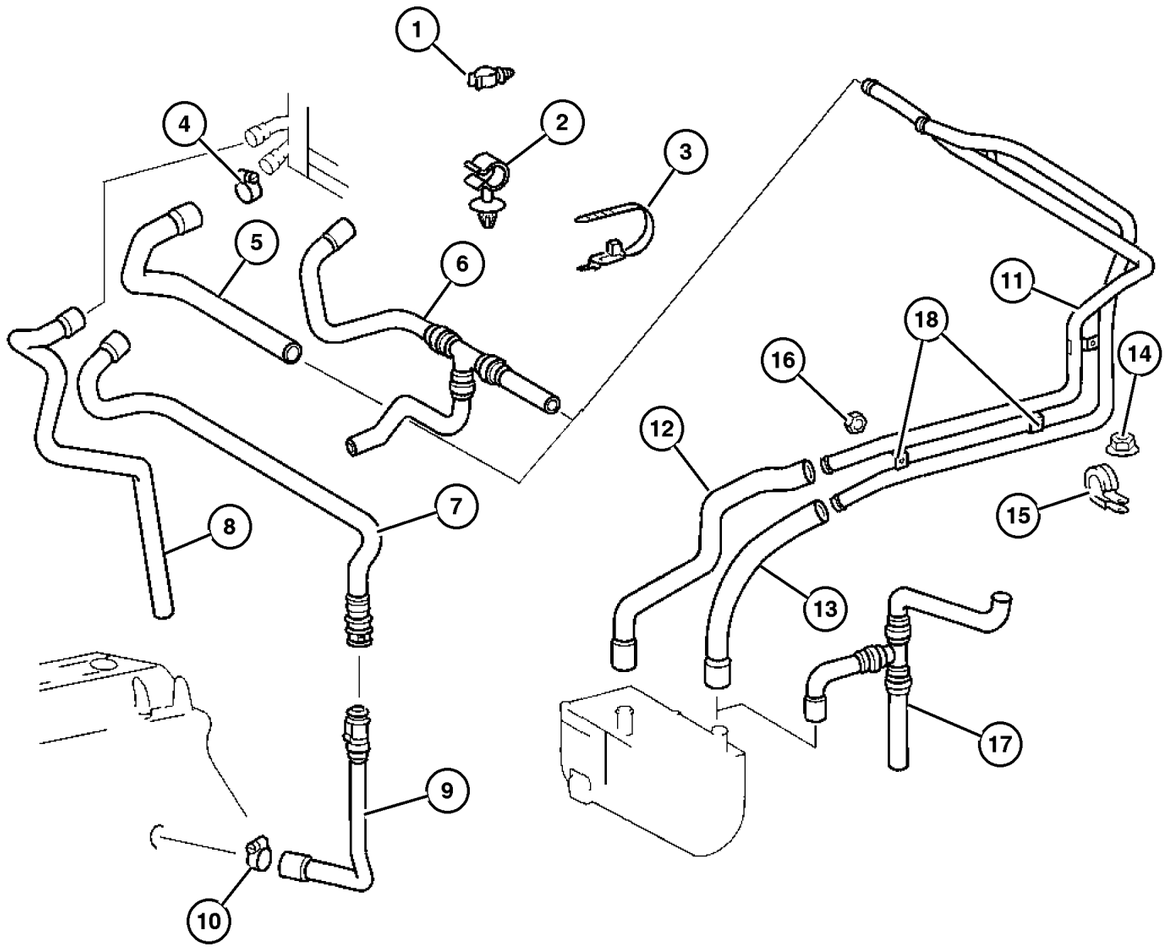

ITEM	PART NUMBER	QTY	LINE	SERIES	BODY	ENGINE	TRANS	TRIM	DESCRIPTION
		3	2, 6		11, 12, 14, 15, 16	EX8			
		3	2, 6		51, 52, 54, 55, 56	EX8			
		3	3, 7		02, 06	EX8			
		3	3, 7		12, 15, 16	EX8			
17									HOSE, Auxiliary Heater
	5124 886AA	1	2, 6		11, 12, 14, 15, 16	EX8			
		1	2, 6		51, 52, 54, 55, 56	EX8			
		1	3, 7		12, 15, 16	EX8			
18									BRACKET, Heater Core Tubes
	5133 315AA	1	2, 6		01, 02, 06	EX8			
		1	2, 6		11, 12, 14, 15, 16	EX8			
		1	2, 6		51, 52, 54, 55, 56	EX8			
		1	3, 7		02, 06	EX8			
		1	3, 7		12, 15, 16	EX8			

Refer to Model Legend Information Bookmark

AR = Use as required - = Non illustrated part # = New this model year

March 3, 2006

« RETURN TO GROUP INDEX

Plumbing, Air Conditioning
Figure 024-270

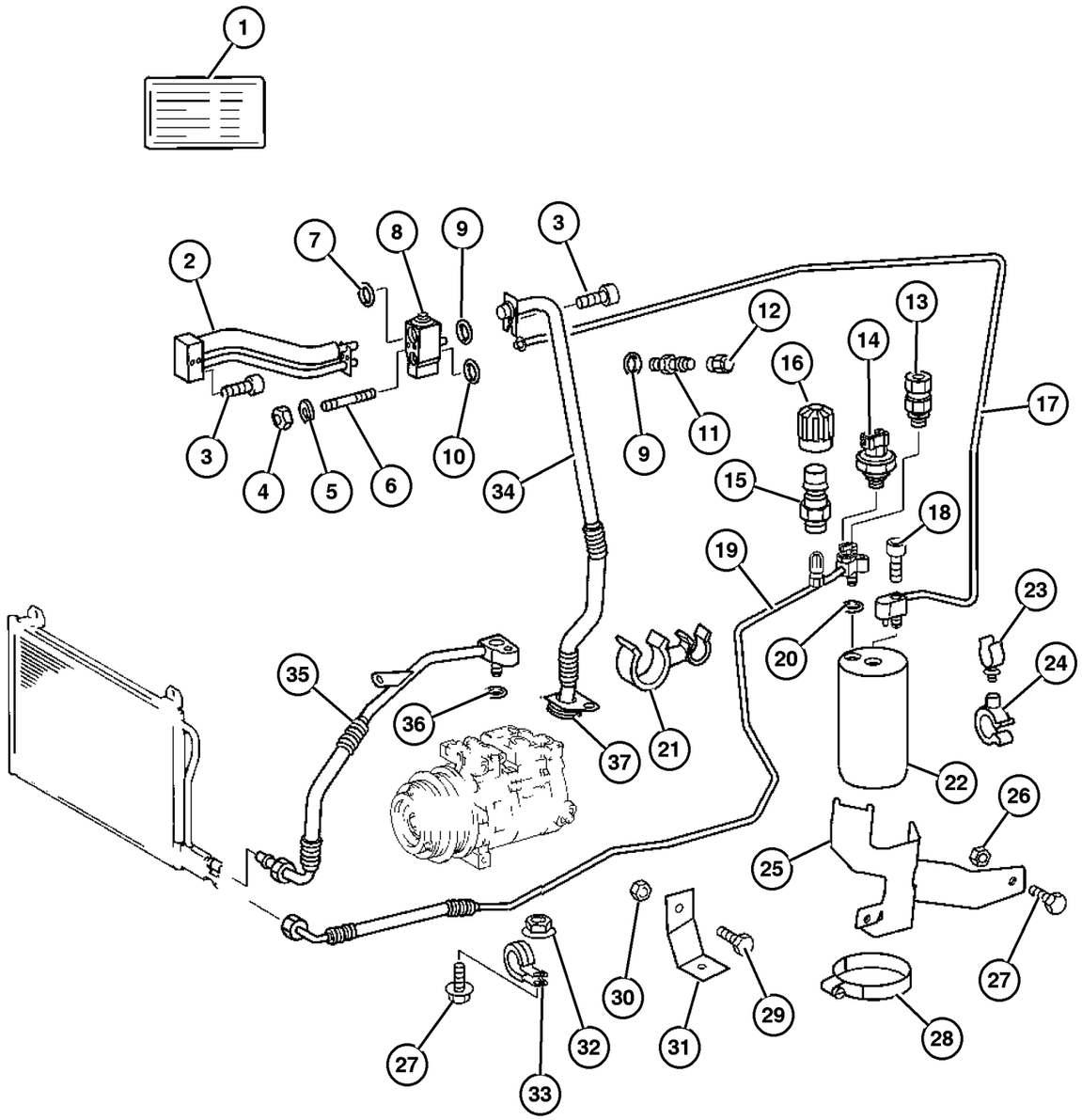

ITEM	PART NUMBER	QTY	LINE	SERIES	BODY	ENGINE	TRANS	TRIM	DESCRIPTION
1									LABEL, A/C Spec.
	5124 359AA	1	2, 6		01, 02, 06	EX8			
		1	2, 6		11, 12, 14, 15, 16	EX8			
		1	2, 6		51, 52, 54, 55, 56	EX8			
		1	3, 7		02, 06	EX8			
		1	3, 7		12, 15, 16	EX8			
2									LINE, A/C Suction And Liquid
	5104 479AA	1	2, 6		01, 02, 06	EX8			
		1	2, 6		11, 12, 14, 15, 16	EX8			
		1	2, 6		51, 52, 54, 55, 56	EX8			
		1	3, 7		02, 06	EX8			
		1	3, 7		12, 15, 16	EX8			
3									SCREW
	5126 135AA	2	2, 6		01, 02, 06	EX8			
		2	2, 6		11, 12, 14, 15, 16	EX8			
		2	2, 6		51, 52, 54, 55, 56	EX8			
		2	3, 7		02, 06	EX8			
		2	3, 7		12, 15, 16	EX8			
4									NUT, (NOT SERVICED) (Not Serviced)
5									LOCK WASHER
	5126 240AA	1	2, 6		01, 02, 06	EX8			
		1	2, 6		11, 12, 14, 15, 16	EX8			

Refer to Model Legend Information Bookmark

Plumbing, Air Conditioning
Figure 024-270

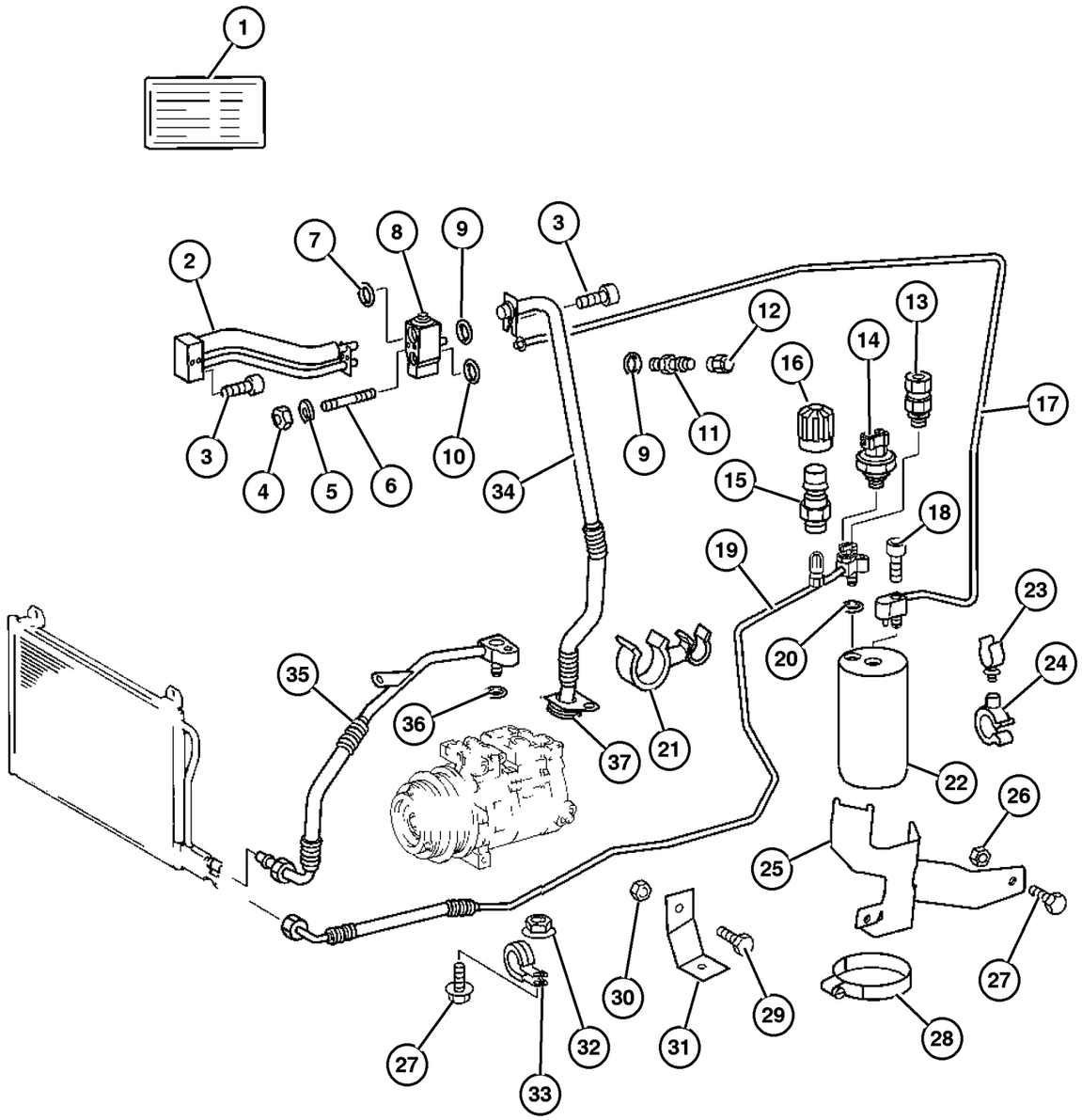

ITEM	PART NUMBER	QTY	LINE	SERIES	BODY	ENGINE	TRANS	TRIM	DESCRIPTION
		1	2, 6		51, 52, 54, 55, 56	EX8			
		1	3, 7		02, 06	EX8			
		1	3, 7		12, 15, 16	EX8			
6	5134 028AA	1	2, 6		01, 02, 06	EX8			STUD, Expansion Valve
		1	2, 6		11, 12, 14, 15, 16	EX8			
		1	2, 6		51, 52, 54, 55, 56	EX8			
		1	3, 7		02, 06	EX8			
		1	3, 7		12, 15, 16	EX8			
7	5098 971AA	1	2, 6		01, 02, 06	EX8			O RING, A/C Line
		1	2, 6		11, 12, 14, 15, 16	EX8			
		1	2, 6		51, 52, 54, 55, 56	EX8			
		1	3, 7		02, 06	EX8			
		1	3, 7		12, 15, 16	EX8			
8	5138 897AA	1	2, 6		11, 12, 14, 15, 16	EX8			VALVE, Expansion
		1	2, 6		51, 52, 54, 55, 56	EX8			
		1	3, 7		12, 15, 16	EX8			
9	5103 930AA	2	2, 6		01, 02, 06	EX8			O RING, A/C Line
		2	2, 6		11, 12, 14, 15, 16	EX8			

Refer to Model Legend Information Bookmark

Plumbing, Air Conditioning
Figure 024-270

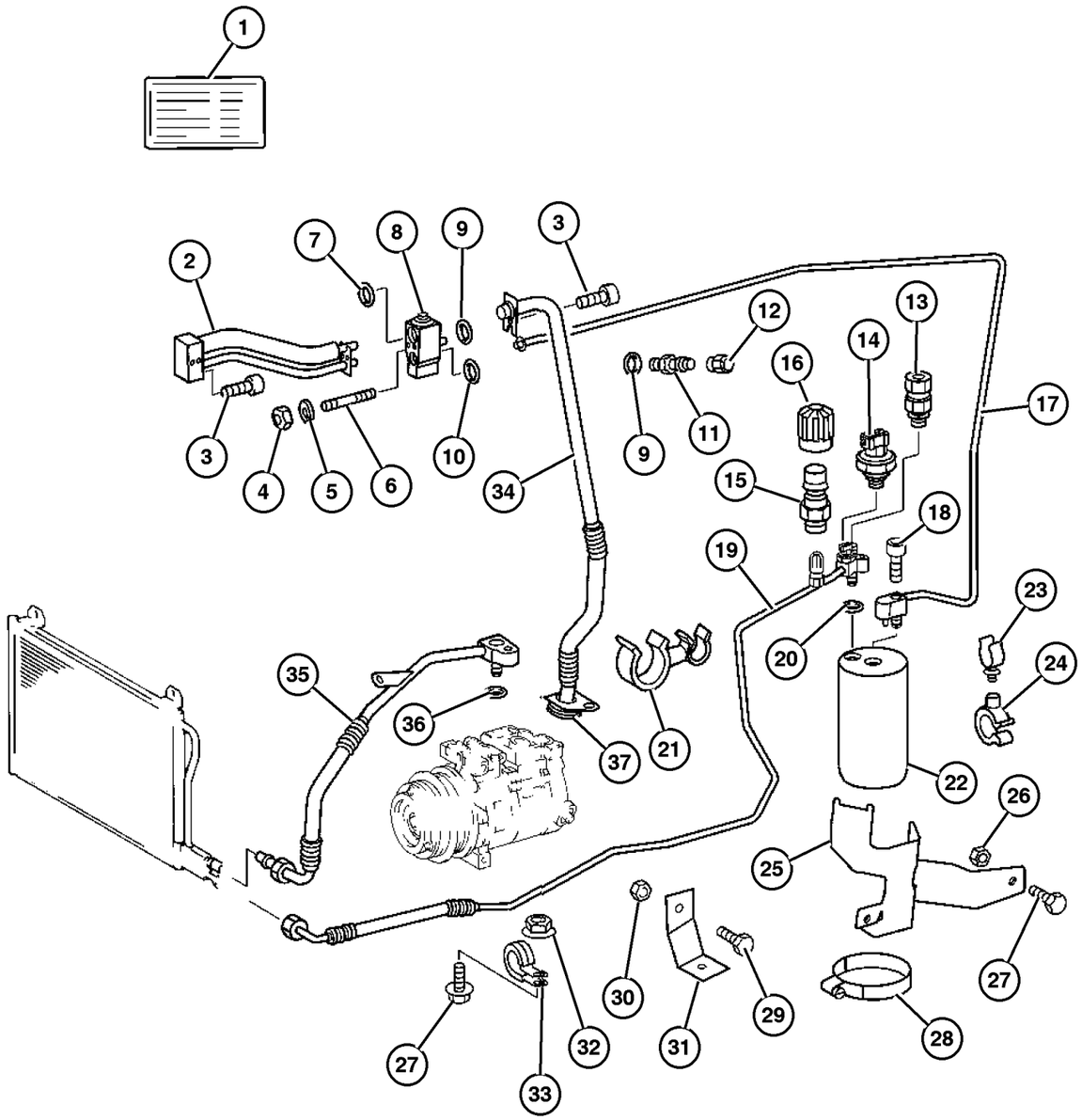

ITEM	PART NUMBER	QTY	LINE	SERIES	BODY	ENGINE	TRANS	TRIM	DESCRIPTION
		2	2, 6		51, 52, 54, 55, 56	EX8			
		2	3, 7		02, 06	EX8			
		2	3, 7		12, 15, 16	EX8			
10	5098 970AA	2	2, 6		01, 02, 06	EX8			O RING, A/C Line
		2	2, 6		11, 12, 14, 15, 16	EX8			
		2	2, 6		51, 52, 54, 55, 56	EX8			
		2	3, 7		02, 06	EX8			
		2	3, 7		12, 15, 16	EX8			
11	5103 771AA	1	2, 6		01, 02, 06	EX8			VALVE, Check
		1	2, 6		11, 12, 14, 15, 16	EX8			
		1	2, 6		51, 52, 54, 55, 56	EX8			
		1	3, 7		02, 06	EX8			
		1	3, 7		12, 15, 16	EX8			
12	5134 029AA	1	2, 6		01, 02, 06	EX8			CAP, Sealing
		1	2, 6		11, 12, 14, 15, 16	EX8			
		1	2, 6		51, 52, 54, 55, 56	EX8			
		1	3, 7		02, 06	EX8			
		1	3, 7		12, 15, 16	EX8			
13	5098 395AA	1	2, 6		01, 02, 06	EX8			VALVE, A/C Pressure Relief

Refer to Model Legend Information Bookmark

AR = Use as required - = Non illustrated part # = New this model year

March 3, 2006

« RETURN TO GROUP INDEX

Plumbing, Air Conditioning
Figure 024-270

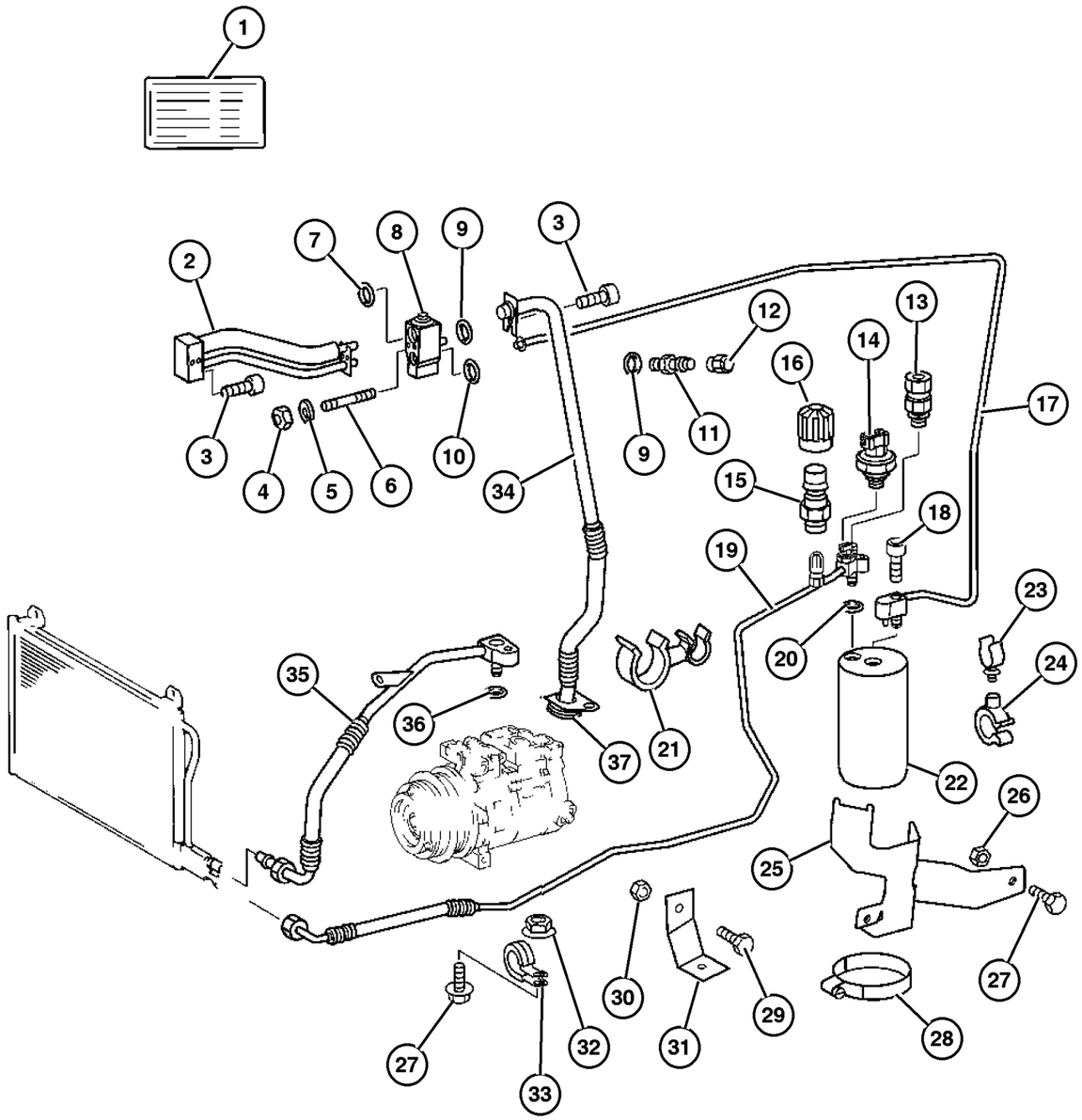

ITEM	PART NUMBER	QTY	LINE	SERIES	BODY	ENGINE	TRANS	TRIM	DESCRIPTION
		1	2, 6		11, 12, 14, 15, 16	EX8			
		1	2, 6		51, 52, 54, 55, 56	EX8			
		1	3, 7		02, 06	EX8			
		1	3, 7		12, 15, 16	EX8			
14									SWITCH, A/C Pressure
	5097 873AA	1	2, 6		01, 02, 06	EX8			
		1	2, 6		11, 12, 14, 15, 16	EX8			
		1	2, 6		51, 52, 54, 55, 56	EX8			
		1	3, 7		02, 06	EX8			
		1	3, 7		12, 15, 16	EX8			
15									VALVE, Charging
	5098 396AA	1	2, 6		01, 02, 06	EX8			
		1	2, 6		11, 12, 14, 15, 16	EX8			
		1	2, 6		51, 52, 54, 55, 56	EX8			
		1	3, 7		02, 06	EX8			
		1	3, 7		12, 15, 16	EX8			
16									CAP, A/C Charge Valve
	5098 958AA	1	2, 6		01, 02, 06	EX8			
		1	2, 6		11, 12, 14, 15, 16	EX8			
		1	2, 6		51, 52, 54, 55, 56	EX8			
		1	3, 7		02, 06	EX8			
		1	3, 7		12, 15, 16	EX8			

Refer to Model Legend Information Bookmark

AR = Use as required - = Non illustrated part # = New this model year

March 3, 2006

« RETURN TO GROUP INDEX

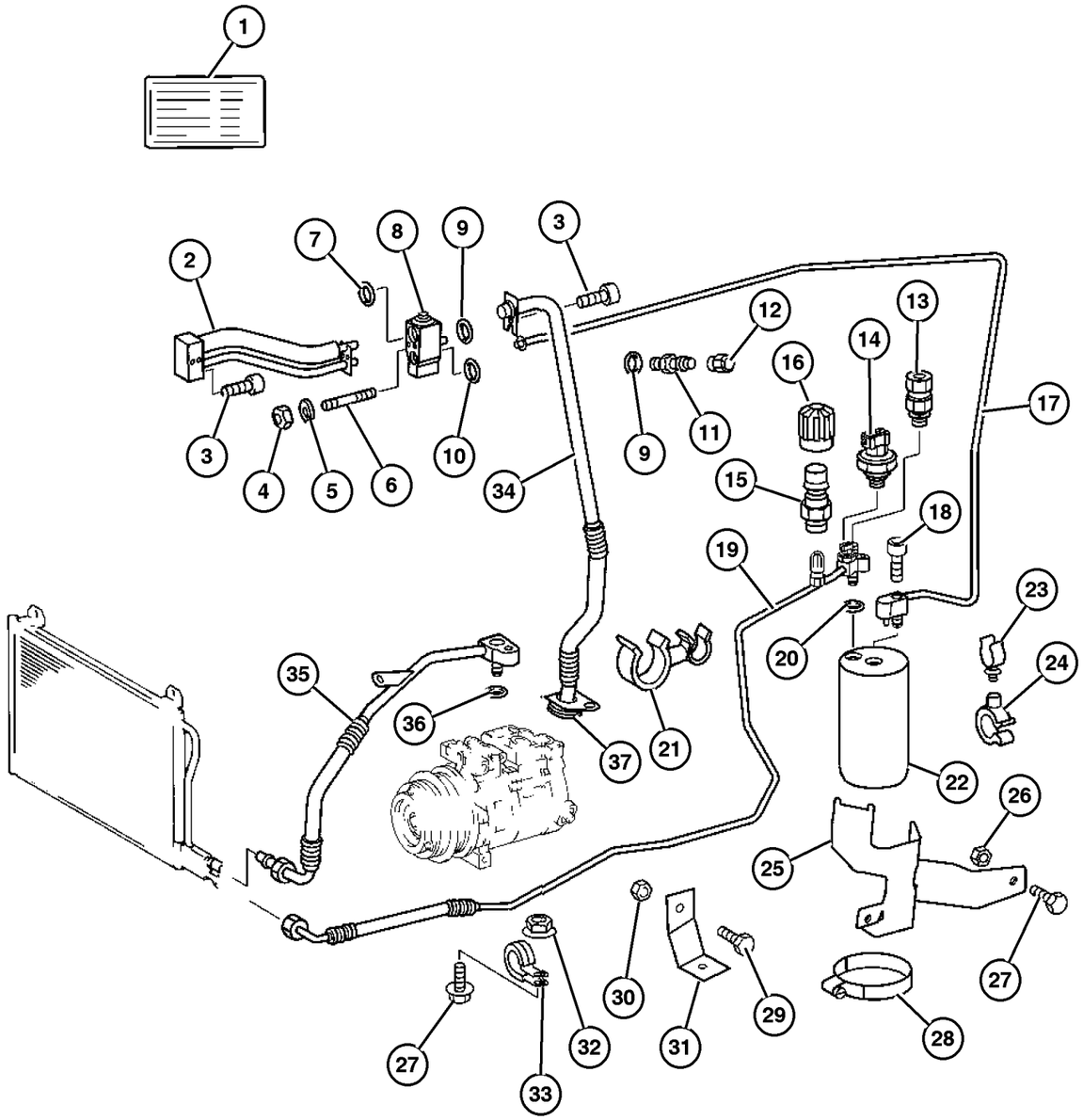

ITEM	PART NUMBER	QTY	LINE	SERIES	BODY	ENGINE	TRANS	TRIM	DESCRIPTION
17									LINE, Receiver/Drier to Expansion Valve
	5124 646AA	1	2, 6		01, 02, 06	EX8			
		1	2, 6		11, 12, 14, 15, 16	EX8			
		1	2, 6		51, 52, 54, 55, 56	EX8			
		1	3, 7		02, 06	EX8			
		1	3, 7		12, 15, 16	EX8			
18									SCREW
	5126 136AA	2	2, 6		01, 02, 06	EX8			
		2	2, 6		11, 12, 14, 15, 16	EX8			
		2	2, 6		51, 52, 54, 55, 56	EX8			
		2	3, 7		02, 06	EX8			
		2	3, 7		12, 15, 16	EX8			
19									LINE, Condenser to Receiver/Drier
	5104 484AA	1	2, 6		01, 02, 06	EX8			
		1	2, 6		11, 12, 14, 15, 16	EX8			
		1	2, 6		51, 52, 54, 55, 56	EX8			
		1	3, 7		02, 06	EX8			
		1	3, 7		12, 15, 16	EX8			
20									O RING, Air Conditioning Line
	5103 571AA	1	2, 6		01, 02, 06	EX8			
		1	2, 6		11, 12, 14, 15, 16	EX8			

Refer to Model Legend Information Bookmark

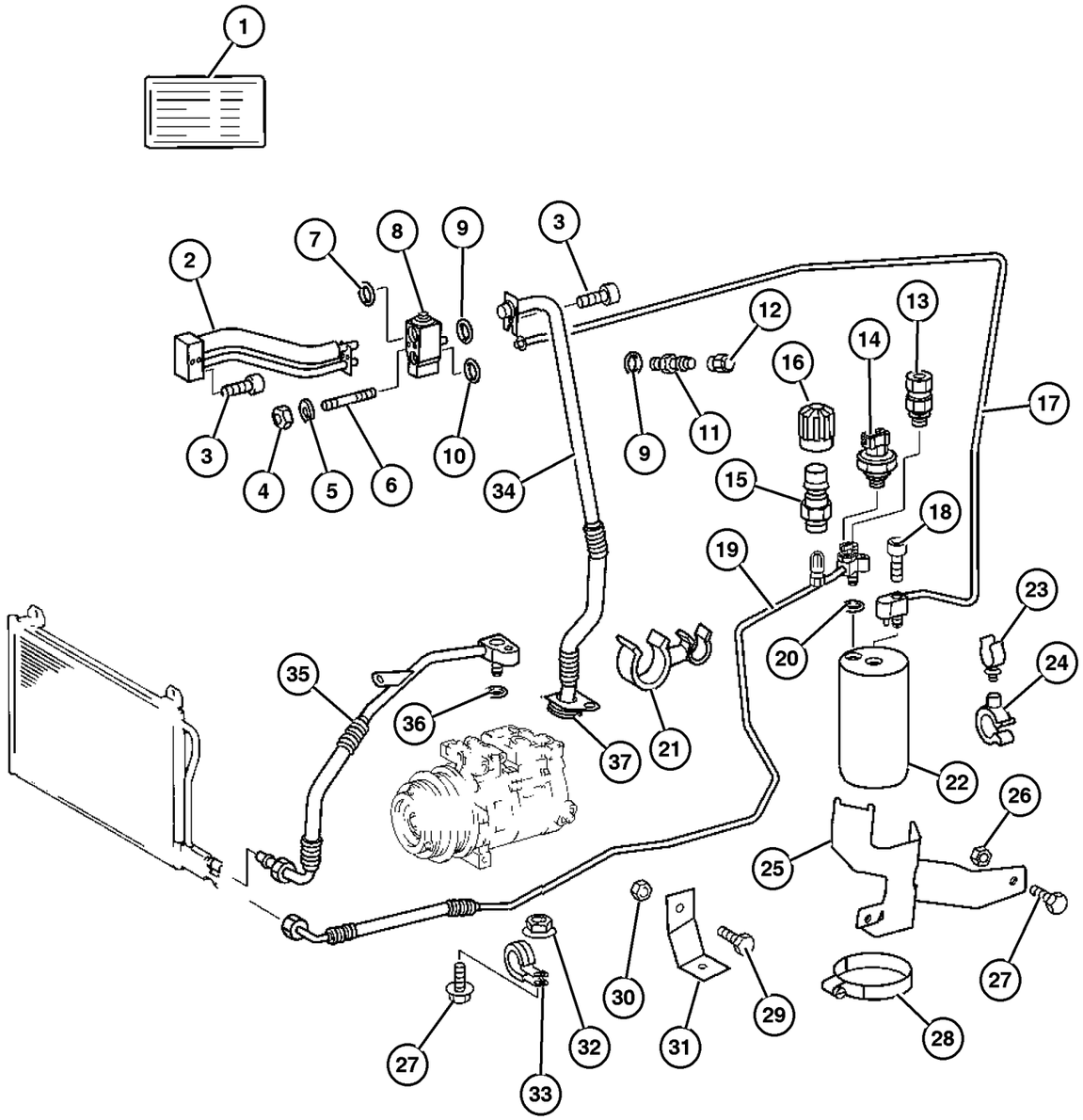

ITEM	PART NUMBER	QTY	LINE	SERIES	BODY	ENGINE	TRANS	TRIM	DESCRIPTION
		1	2, 6		51, 52, 54, 55, 56	EX8			
		1	3, 7		02, 06	EX8			
		1	3, 7		12, 15, 16	EX8			
21	5124 806AA	1	2, 6		01, 02, 06	EX8			CLIP, Hose
		1	2, 6		11, 12, 14, 15, 16	EX8			
		1	2, 6		51, 52, 54, 55, 56	EX8			
		1	3, 7		02, 06	EX8			
		1	3, 7		12, 15, 16	EX8			
22	5103 570AA	1	2, 6		01, 02, 06	EX8			RECEIVER DRIER
		1	2, 6		11, 12, 14, 15, 16	EX8			
		1	2, 6		51, 52, 54, 55, 56	EX8			
		1	3, 7		02, 06	EX8			
		1	3, 7		12, 15, 16	EX8			
23	6104 924AA	1	2, 6		01, 02, 06	EX8			CLIP, Retaining
		1	2, 6		11, 12, 14, 15, 16	EX8			
		1	2, 6		51, 52, 54, 55, 56	EX8			
		1	3, 7		02, 06	EX8			
		1	3, 7		12, 15, 16	EX8			
24	5133 495AA	1	2, 6		01, 02, 06	EX8			CLAMP, HOSE CLAMP

Refer to Model Legend Information Bookmark

Plumbing, Air Conditioning
Figure 024-270

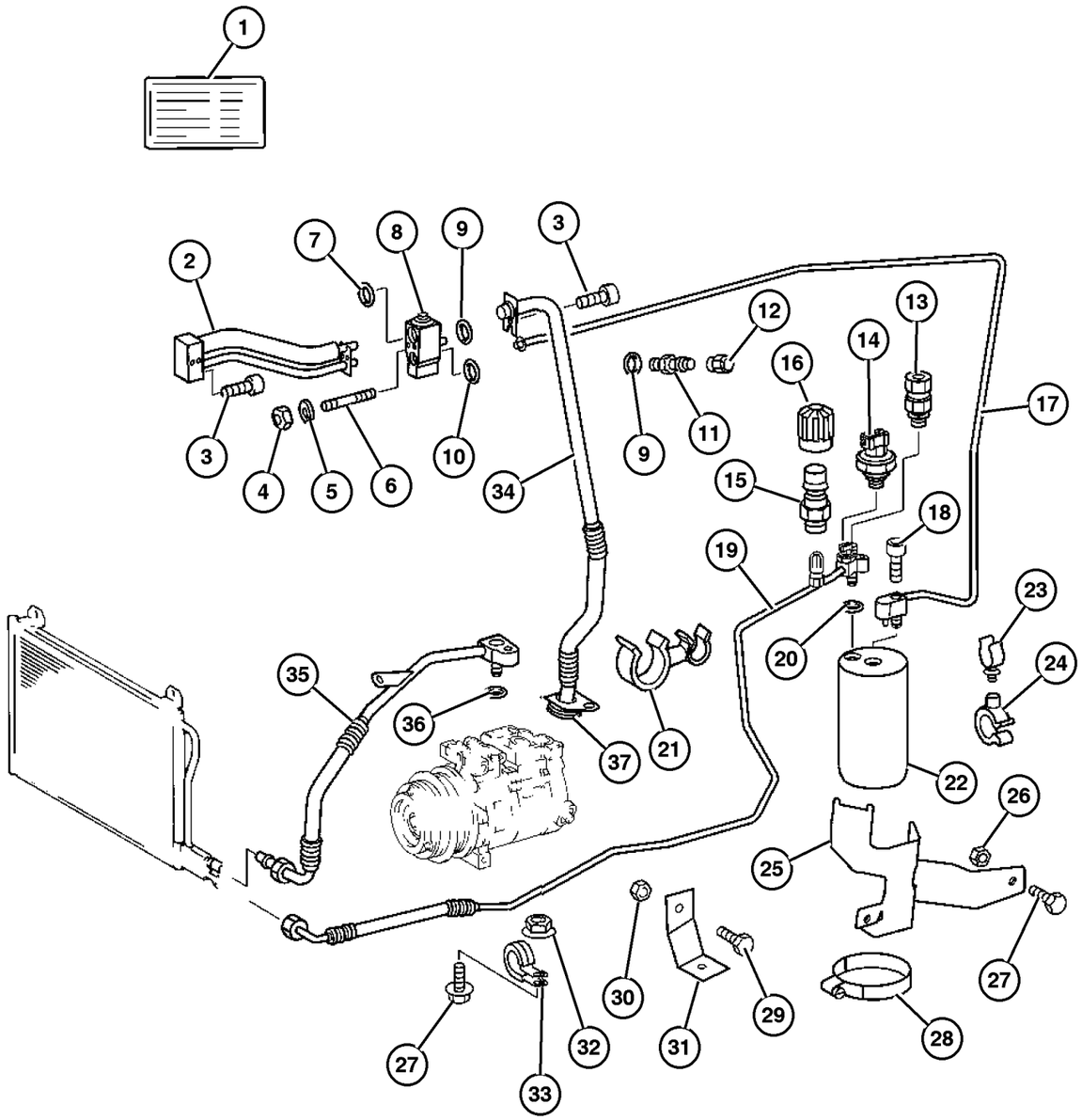

ITEM	PART NUMBER	QTY	LINE	SERIES	BODY	ENGINE	TRANS	TRIM	DESCRIPTION
		1	2, 6		11, 12,	EX8			
					14, 15,				
					16				
		1	2, 6		51, 52,	EX8			
					54, 55,				
					56				
		1	3, 7		02, 06	EX8			
		1	3, 7		12, 15,	EX8			
					16				
25									BRACKET, Recirculating Pump
	5124 791AA	1	2, 6		01, 02,	EX8			
					06				
		1	2, 6		11, 12,	EX8			
					14, 15,				
					16				
		1	2, 6		51, 52,	EX8			
					54, 55,				
					56				
		1	3, 7		02, 06	EX8			
		1	3, 7		12, 15,	EX8			
					16				
26									NUT, Hex, M6
	5096 978AA	2	2, 6		01, 02,	EX8			
					06				
		2	2, 6		11, 12,	EX8			
					14, 15,				
					16				
		2	2, 6		51, 52,	EX8			
					54, 55,				
					56				
		2	3, 7		02, 06	EX8			
		2	3, 7		12, 15,	EX8			
					16				
27									SCREW
	6104 005AA	2	2, 6		01, 02,	EX8			
					06				
		2	2, 6		11, 12,	EX8			
					14, 15,				
					16				
		2	2, 6		51, 52,	EX8			
					54, 55,				
					56				
		2	3, 7		02, 06	EX8			
		2	3, 7		12, 15,	EX8			
					16				
28									CLAMP

Refer to Model Legend Information Bookmark

AR = Use as required - = Non illustrated part # = New this model year

March 3, 2006

« RETURN TO GROUP INDEX

Plumbing, Air Conditioning
Figure 024-270

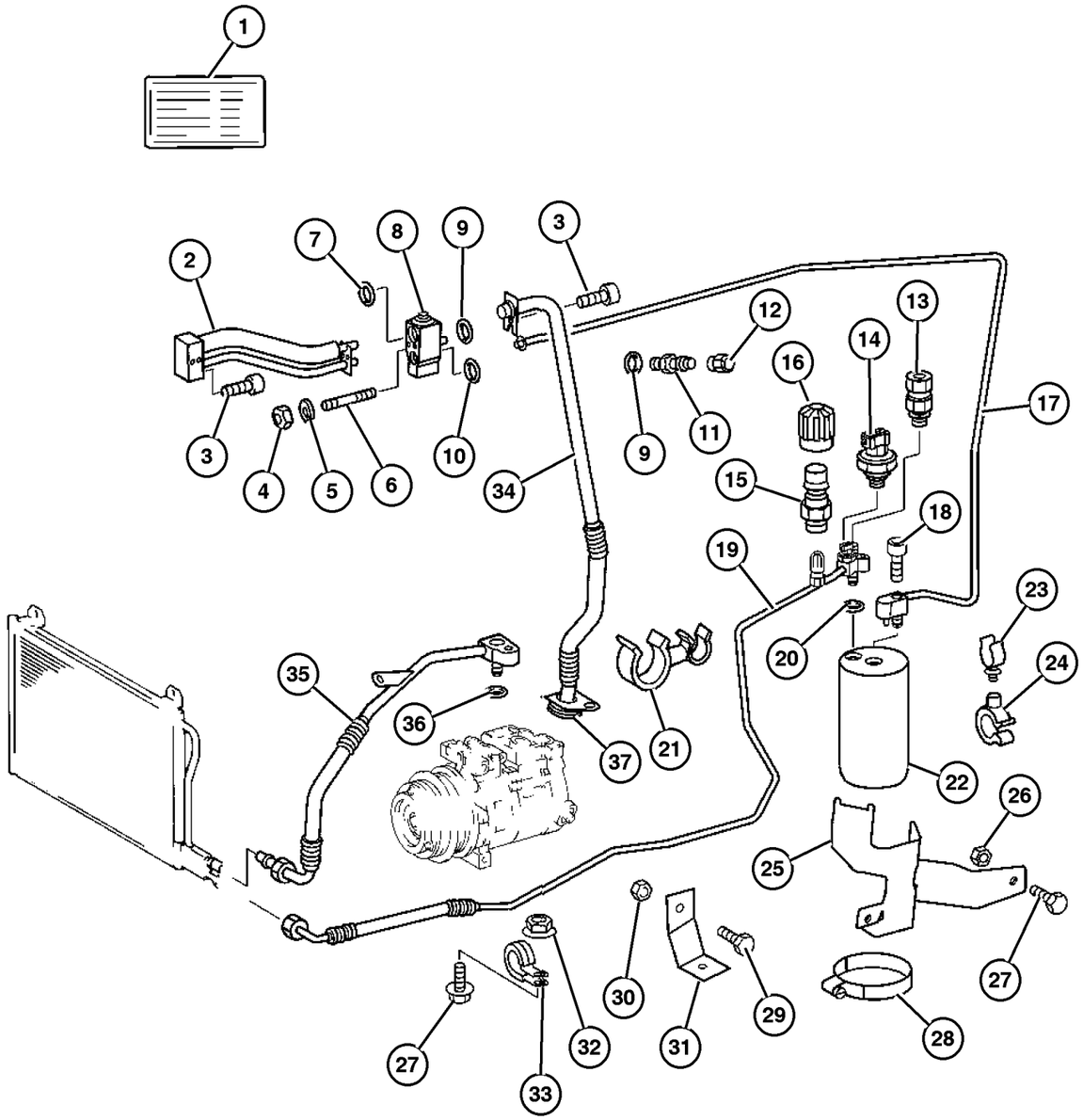

ITEM	PART NUMBER	QTY	LINE	SERIES	BODY	ENGINE	TRANS	TRIM	DESCRIPTION
	6104 787AA	1	2, 6		01, 02, 06	EX8			
		1	2, 6		11, 12, 14, 15, 16	EX8			
		1	2, 6		51, 52, 54, 55, 56	EX8			
	6104 791AA	1	3, 7		02, 06	EX8			
		1	3, 7		12, 15, 16	EX8			
29									NUT, M6x1.00
	5127 449AA	1	2, 6		01, 02, 06	EX8			
		1	2, 6		11, 12, 14, 15, 16	EX8			
		1	2, 6		51, 52, 54, 55, 56	EX8			
		2	3, 7		02, 06	EX8			
		2	3, 7		12, 15, 16	EX8			
30									NUT AND WASHER, M6x1
	6104 725AA	1	2, 6		01, 02, 06	EX8			
		1	2, 6		11, 12, 14, 15, 16	EX8			
		1	2, 6		51, 52, 54, 55, 56	EX8			
		1	3, 7		02, 06	EX8			
		1	3, 7		12, 15, 16	EX8			
31									BRACKET, (NOT SERVICED) (Not Serviced)
32									NUT, Hex, M6
	5096 978AA	2	2, 6		01, 02, 06	EX8			
		2	2, 6		11, 12, 14, 15, 16	EX8			

Refer to Model Legend Information Bookmark

AR = Use as required - = Non illustrated part # = New this model year

March 3, 2006

« RETURN TO GROUP INDEX

« »

Plumbing, Air Conditioning
Figure 024-270

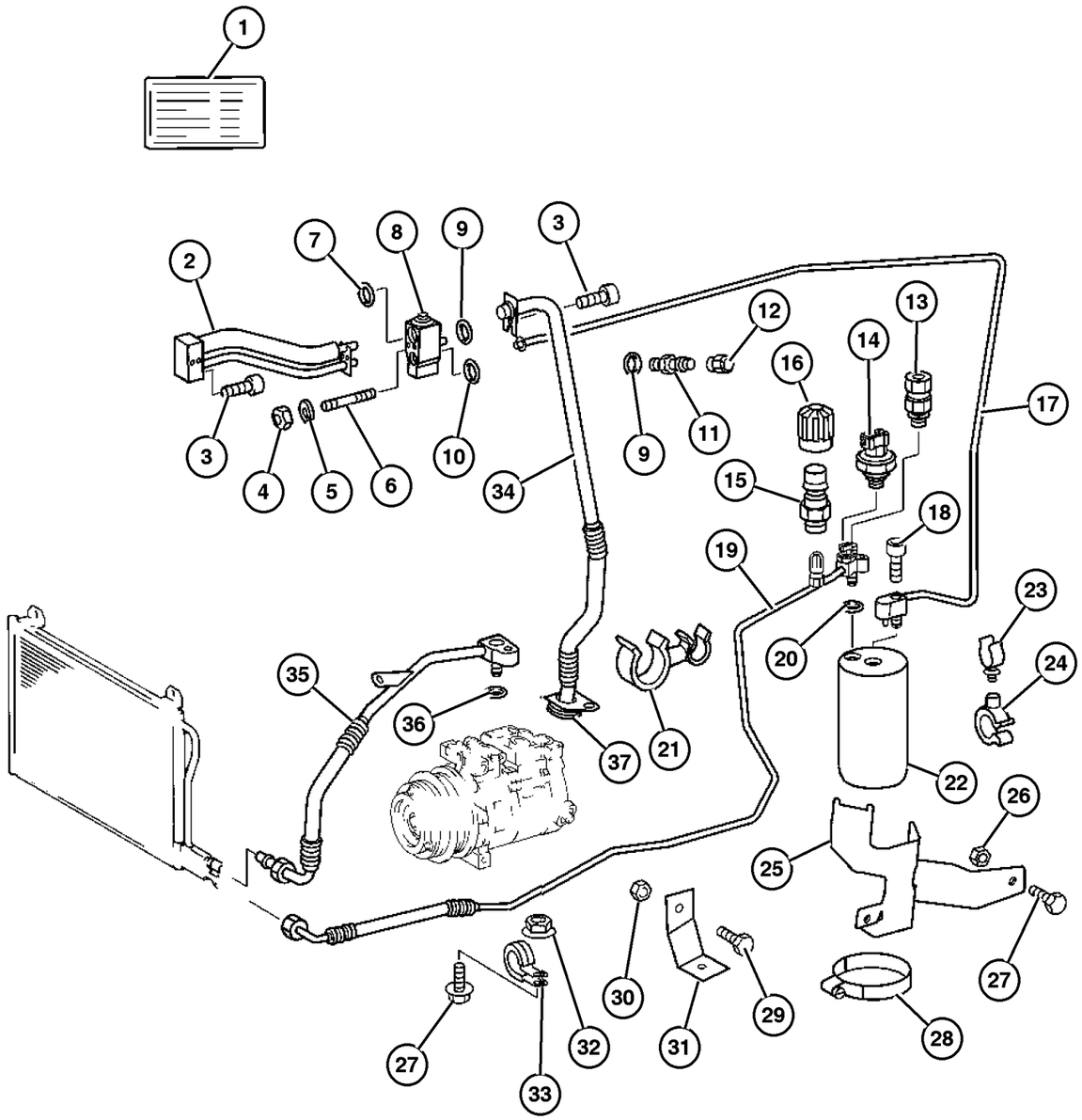

ITEM	PART NUMBER	QTY	LINE	SERIES	BODY	ENGINE	TRANS	TRIM	DESCRIPTION
		2	2, 6		51, 52, 54, 55, 56	EX8			
		2	3, 7		02, 06	EX8			
		2	3, 7		12, 15, 16	EX8			
33	5126 284AA	1	2, 6		01, 02, 06	EX8			CLAMP, Air Conditioning Piping
		1	2, 6		11, 12, 14, 15, 16	EX8			
		1	2, 6		51, 52, 54, 55, 56	EX8			
		1	3, 7		02, 06	EX8			
		1	3, 7		12, 15, 16	EX8			
34	5124 647AA	1	2, 6		01, 02, 06	EX8			LINE, Expansion Valve to Compressor
		1	2, 6		11, 12, 14, 15, 16	EX8			
		1	2, 6		51, 52, 54, 55, 56	EX8			
		1	3, 7		02, 06	EX8			
		1	3, 7		12, 15, 16	EX8			
35	5124 817AA	1	2, 6		01, 02, 06	EX8			LINE, A/C Compressor
		1	2, 6		11, 12, 14, 15, 16	EX8			
		1	2, 6		51, 52, 54, 55, 56	EX8			
		1	3, 7		02, 06	EX8			
		1	3, 7		12, 15, 16	EX8			
36									O RING, A/C Line

Refer to Model Legend Information Bookmark

AR = Use as required - = Non illustrated part # = New this model year

March 3, 2006

« RETURN TO GROUP INDEX

Plumbing, Air Conditioning
Figure 024-270

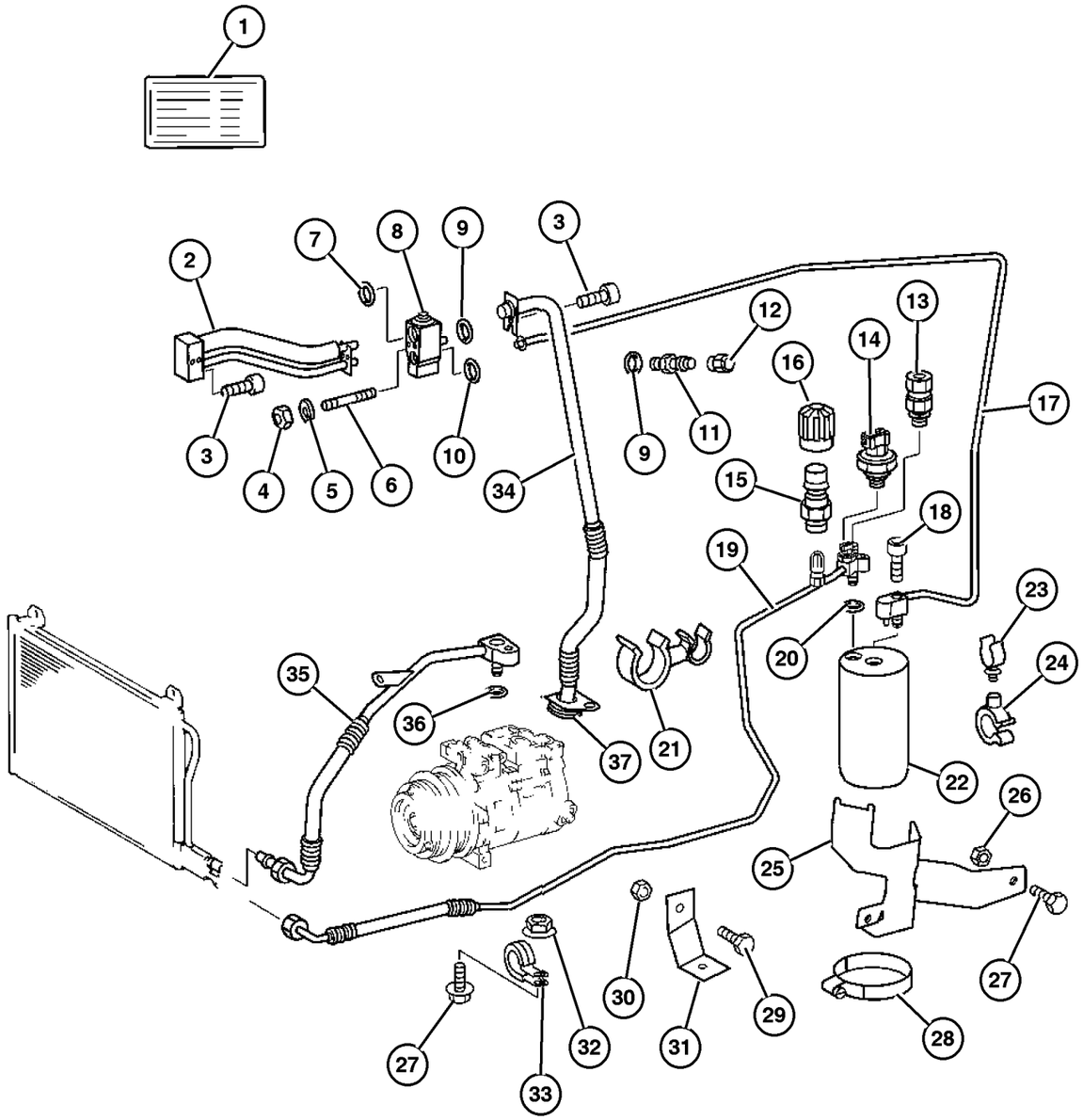

ITEM	PART NUMBER	QTY	LINE	SERIES	BODY	ENGINE	TRANS	TRIM	DESCRIPTION
	5098 972AA	1	2, 6		01, 02, 06	EX8			
		1	2, 6		11, 12, 14, 15, 16	EX8			
		1	2, 6		51, 52, 54, 55, 56	EX8			
		1	3, 7		02, 06	EX8			
		1	3, 7		12, 15, 16	EX8			
37									SEAL, O-Ring
	5134 027AA	1	2, 6		01, 02, 06	EX8			
		1	2, 6		11, 12, 14, 15, 16	EX8			
		1	2, 6		51, 52, 54, 55, 56	EX8			
		1	3, 7		02, 06	EX8			
		1	3, 7		12, 15, 16	EX8			

Refer to Model Legend Information Bookmark

AR = Use as required - = Non illustrated part # = New this model year

March 3, 2006

« RETURN TO GROUP INDEX

Condenser, Fan Front
Figure 024-280

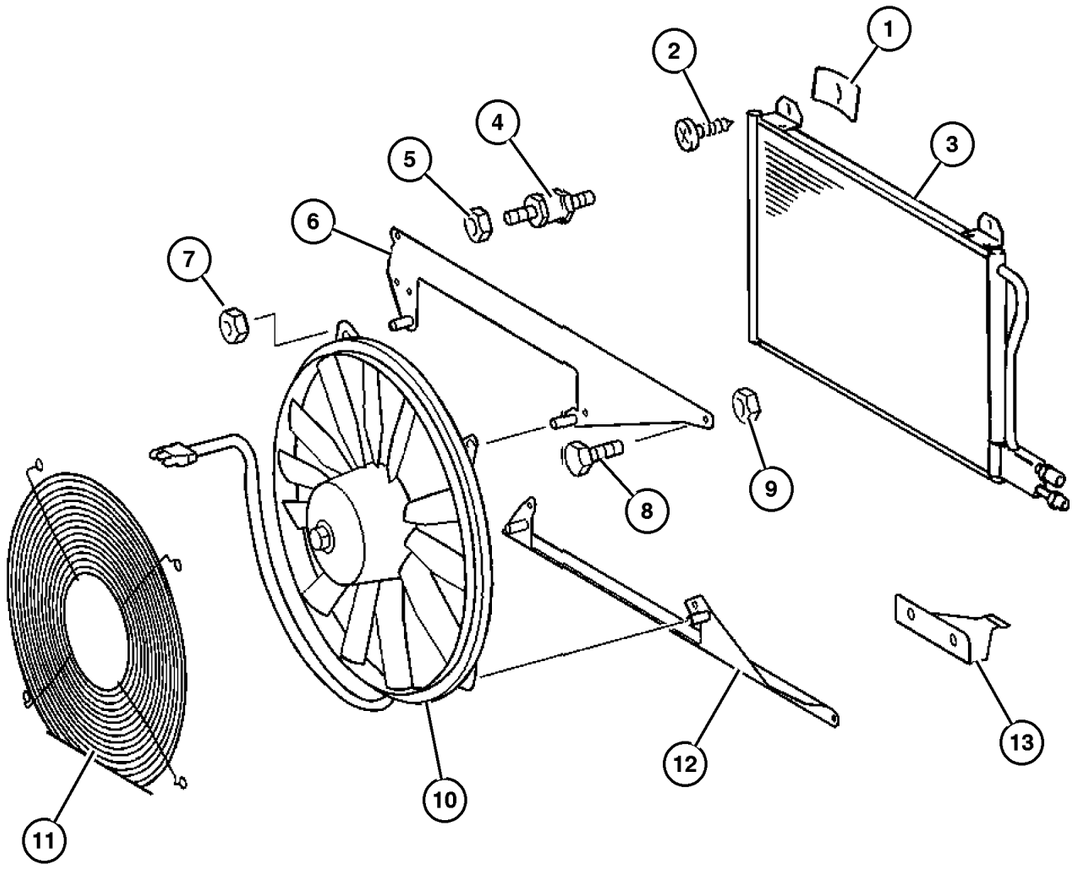

ITEM	PART NUMBER	QTY	LINE	SERIES	BODY	ENGINE	TRANS	TRIM	DESCRIPTION
1									CLIP
	5103 735AA	4	2, 6		01, 02, 06	EX8			
		4	2, 6		11, 12, 14, 15, 16	EX8			
		4	2, 6		51, 52, 54, 55, 56	EX8			
		4	3, 7		02, 06	EX8			
		4	3, 7		12, 15, 16	EX8			
2									SCREW, Tapping
	6104 574AA	4	2, 6		01, 02, 06	EX8			
		4	2, 6		11, 12, 14, 15, 16	EX8			
		4	2, 6		51, 52, 54, 55, 56	EX8			
		4	3, 7		02, 06	EX8			
		4	3, 7		12, 15, 16	EX8			
3									CONDENSER, A/C
	5104 114AA	1	2, 6		01, 02, 06	EX8			[HAB]
		1	2, 6		11, 12, 14, 15, 16	EX8			[HAB]
		1	2, 6		51, 52, 54, 55, 56	EX8			[HAB]
		1	3, 7		02, 06	EX8			[HAB]
		1	3, 7		12, 15, 16	EX8			[HAB]
	5132 357AA	1	2, 6		11, 12, 14, 15, 16	EX8			[HAD]
		1	2, 6		51, 52, 54, 55, 56	EX8			[HAD]
		1	3, 7		12, 15, 16	EX8			[HAD]
4									STUD, Cooling Fan

Refer to Model Legend Information Bookmark

AR = Use as required - = Non illustrated part # = New this model year

March 3, 2006

« RETURN TO GROUP INDEX »

Condenser, Fan Front
Figure 024-280

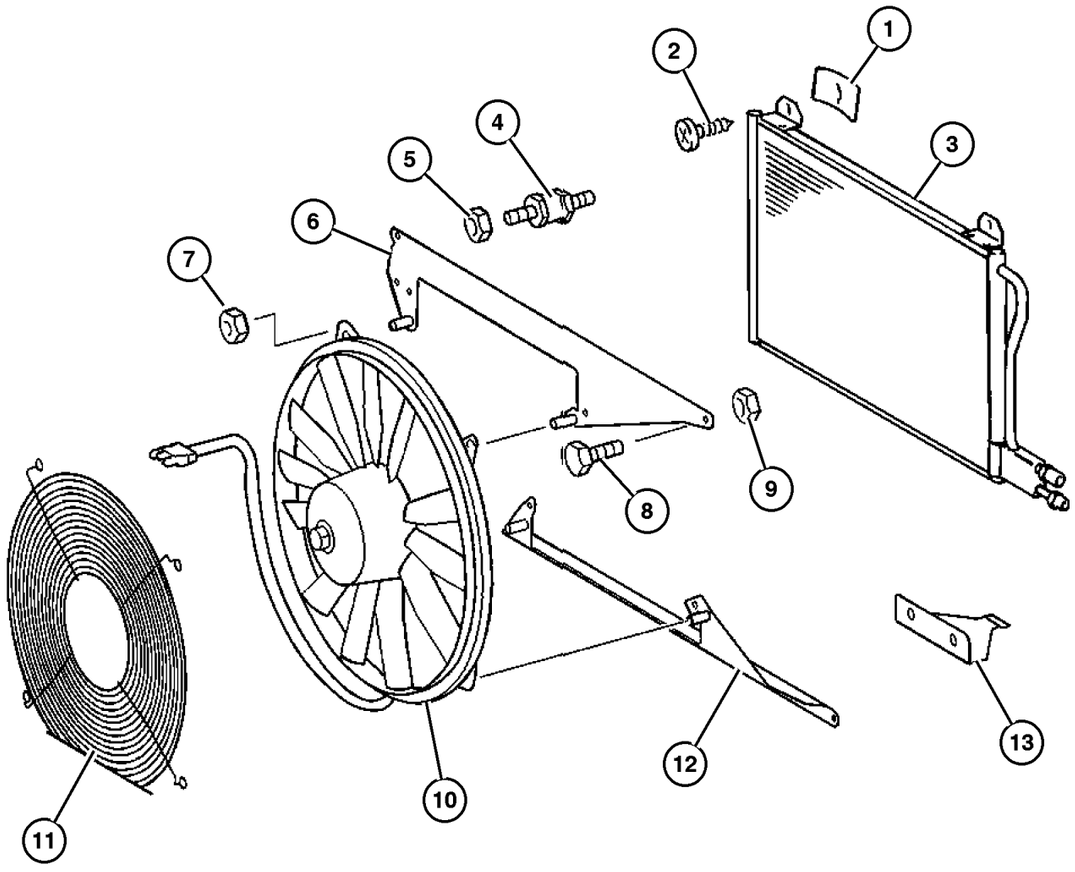

ITEM	PART NUMBER	QTY	LINE	SERIES	BODY	ENGINE	TRANS	TRIM	DESCRIPTION
	5104 031AA	2	2, 6		01, 02, 06	EX8			
		2	2, 6		11, 12, 14, 15, 16	EX8			
		2	2, 6		51, 52, 54, 55, 56	EX8			
		2	3, 7		02, 06	EX8			
		2	3, 7		12, 15, 16	EX8			
5									NUT
	5104 675AA	2	2, 6		01, 02, 06	EX8			
		2	2, 6		11, 12, 14, 15, 16	EX8			
		2	2, 6		51, 52, 54, 55, 56	EX8			
		2	3, 7		02, 06	EX8			
		2	3, 7		12, 15, 16	EX8			
6									BRACKET, Fan
	5119 989AA	1	2, 6		01, 02, 06	EX8			
		1	2, 6		11, 12, 14, 15, 16	EX8			
		1	2, 6		51, 52, 54, 55, 56	EX8			
		1	3, 7		02, 06	EX8			
		1	3, 7		12, 15, 16	EX8			
7									NUT
	6104 715AA	4	2, 6		01, 02, 06	EX8			
		4	2, 6		11, 12, 14, 15, 16	EX8			
		4	2, 6		51, 52, 54, 55, 56	EX8			
		4	3, 7		02, 06	EX8			

Refer to Model Legend Information Bookmark

AR = Use as required - = Non illustrated part # = New this model year

March 3, 2006

« RETURN TO GROUP INDEX

Condenser, Fan Front
Figure 024-280

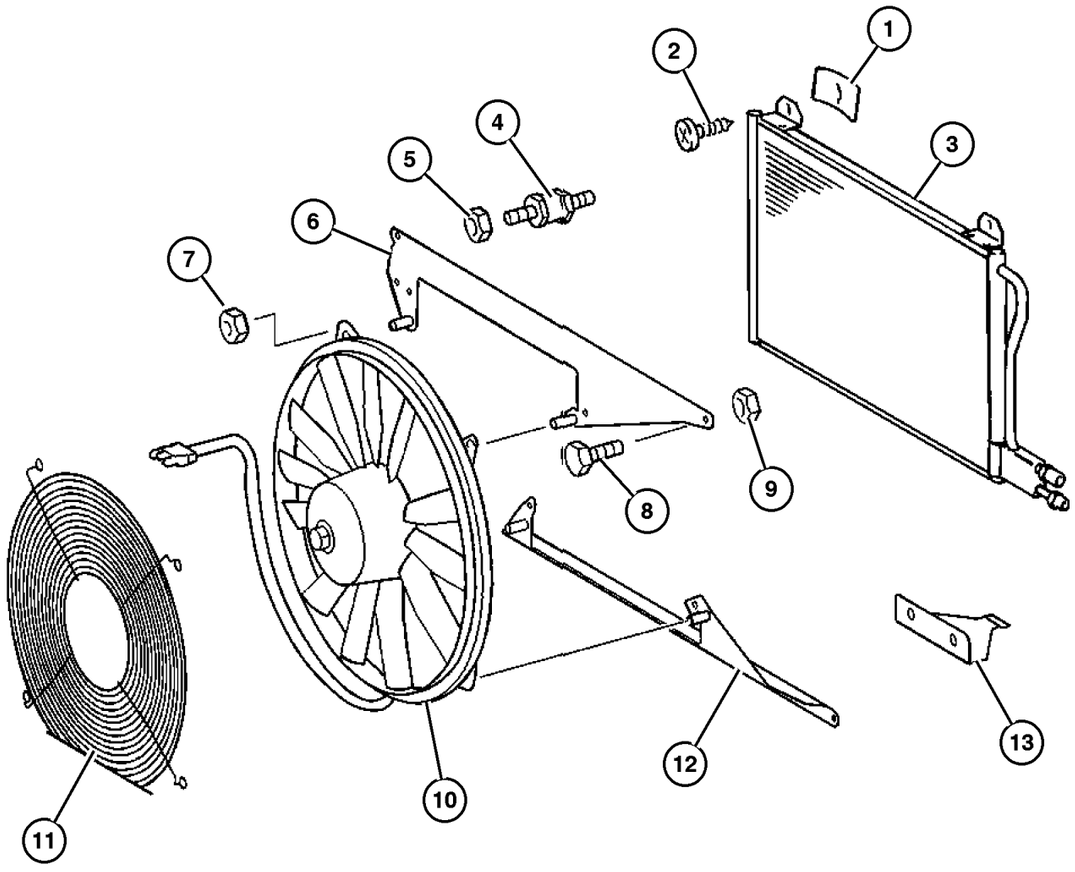

ITEM	PART NUMBER	QTY	LINE	SERIES	BODY	ENGINE	TRANS	TRIM	DESCRIPTION
		4	3, 7		12, 15, 16	EX8			
8	6104 005AA	2	2, 6		01, 02, 06	EX8			SCREW
		2	2, 6		11, 12, 14, 15, 16	EX8			
		2	2, 6		51, 52, 54, 55, 56	EX8			
		2	3, 7		02, 06	EX8			
		2	3, 7		12, 15, 16	EX8			
9	6104 715AA	4	2, 6		01, 02, 06	EX8			NUT
		4	2, 6		11, 12, 14, 15, 16	EX8			
		4	2, 6		51, 52, 54, 55, 56	EX8			
		4	3, 7		02, 06	EX8			
		4	3, 7		12, 15, 16	EX8			
10	5103 653AA	1	2, 6		01, 02, 06	EX8			FAN, Condenser
		1	2, 6		11, 12, 14, 15, 16	EX8			
		1	2, 6		51, 52, 54, 55, 56	EX8			
		1	3, 7		02, 06	EX8			
		1	3, 7		12, 15, 16	EX8			
11	5104 121AA	1	2, 6		01, 02, 06	EX8			GRILLE, Air Inlet
		1	2, 6		11, 12, 14, 15, 16	EX8			

Refer to Model Legend Information Bookmark

AR = Use as required - = Non illustrated part # = New this model year

March 3, 2006

« RETURN TO GROUP INDEX

« »

Condenser, Fan Front
Figure 024-280

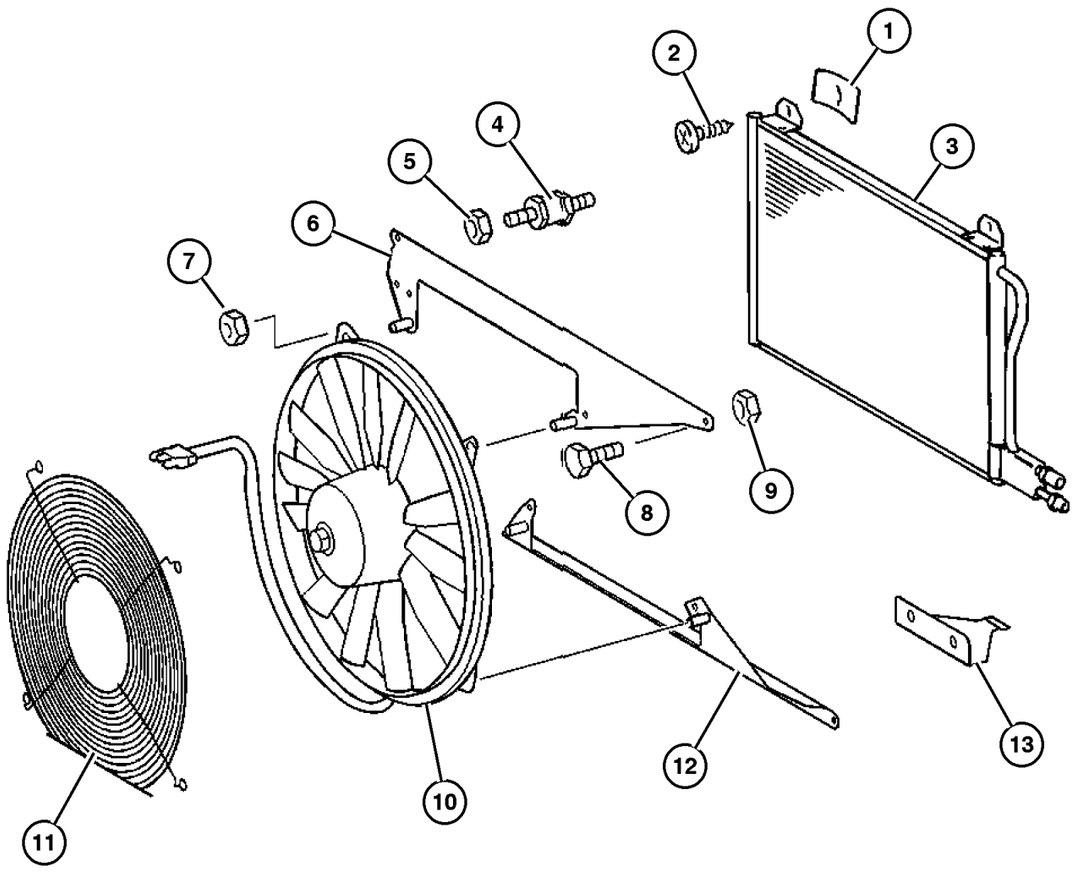

ITEM	PART NUMBER	QTY	LINE	SERIES	BODY	ENGINE	TRANS	TRIM	DESCRIPTION
		1	2, 6		51, 52, 54, 55, 56	EX8			
		1	3, 7		02, 06	EX8			
		1	3, 7		12, 15, 16	EX8			
12	5104 113AA	1	2, 6		01, 02, 06	EX8			BRACKET, Fan
		1	2, 6		11, 12, 14, 15, 16	EX8			
		1	2, 6		51, 52, 54, 55, 56	EX8			
		1	3, 7		02, 06	EX8			
		1	3, 7		12, 15, 16	EX8			
13	5120 001AA	1	2, 6		01, 02, 06	EX8			BRACKET
		1	2, 6		11, 12, 14, 15, 16	EX8			
		1	2, 6		51, 52, 54, 55, 56	EX8			
		1	3, 7		02, 06	EX8			
		1	3, 7		12, 15, 16	EX8			

Refer to Model Legend Information Bookmark

AR = Use as required - = Non illustrated part # = New this model year

March 3, 2006

« RETURN TO GROUP INDEX

Condenser, Fan Roof
Figure 024-285

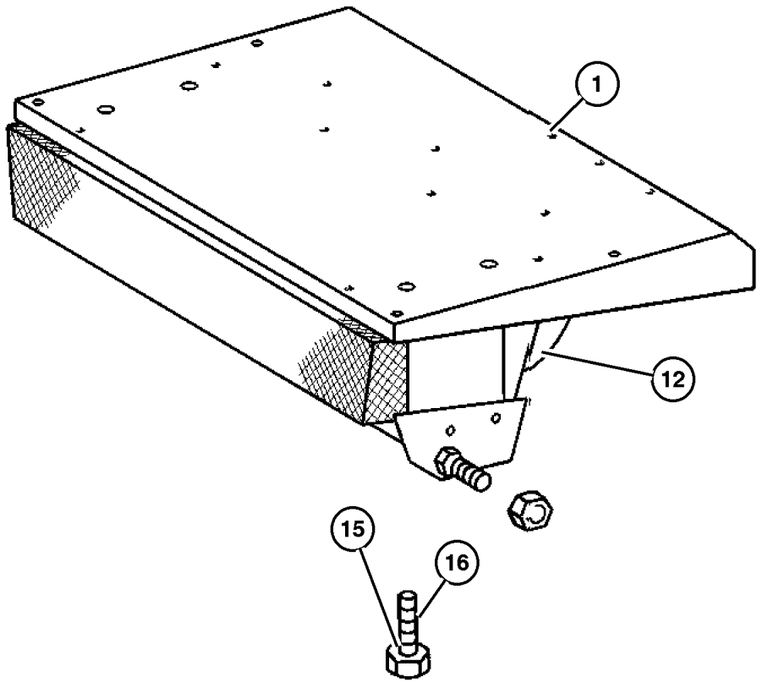

ITEM	PART NUMBER	QTY	LINE	SERIES	BODY	ENGINE	TRANS	TRIM	DESCRIPTION
1									EVAPORATOR UNIT,
	5132 322AA	1	2, 6		11, 12, 14, 15, 16	EX8			EVAPORATOR UNIT Includes item #2
		1	2, 6		51, 52, 54, 55, 56	EX8			Includes item #2
		1	3, 7		12, 15, 16	EX8			Includes item #2
-2									EVAPORATOR, Air Conditioning
	5138 885AA-	1	2, 6		11, 12, 14, 15, 16	EX8			
		1	2, 6		51, 52, 54, 55, 56	EX8			
		1	3, 7		12, 15, 16	EX8			
-3									TUBE, Auxilary A/C and Heater
	5132 374AA-	2	2, 6		11, 12, 14, 15, 16	EX8			
		2	2, 6		51, 52, 54, 55, 56	EX8			
		2	3, 7		12, 15, 16	EX8			
-4									LINE, Auxiliary A/C Liquid
	5132 223AA-	1	2, 6		16	EX8			
		1	2, 6		56	EX8			
-5									LINE, Auxiliary A/C Liquid
	5132 225AA-	1	2, 6		12	EX8			
		1	2, 6		52	EX8			
-6									LINE, Auxiliary A/C Liquid
	5132 237AA-	1	2, 6		11, 12, 14, 15, 16	EX8			
		1	2, 6		51, 52, 54, 55, 56	EX8			
-7									LINE, Auxiliary A/C Suction
	5132 230AA-	1	2, 6		16	EX8			
		1	2, 6		56	EX8			
-8									LINE, Auxiliary A/C Suction

Refer to Model Legend Information Bookmark

AR = Use as required - = Non illustrated part # = New this model year

March 3, 2006

« RETURN TO GROUP INDEX

»

Condenser, Fan Roof
Figure 024-285

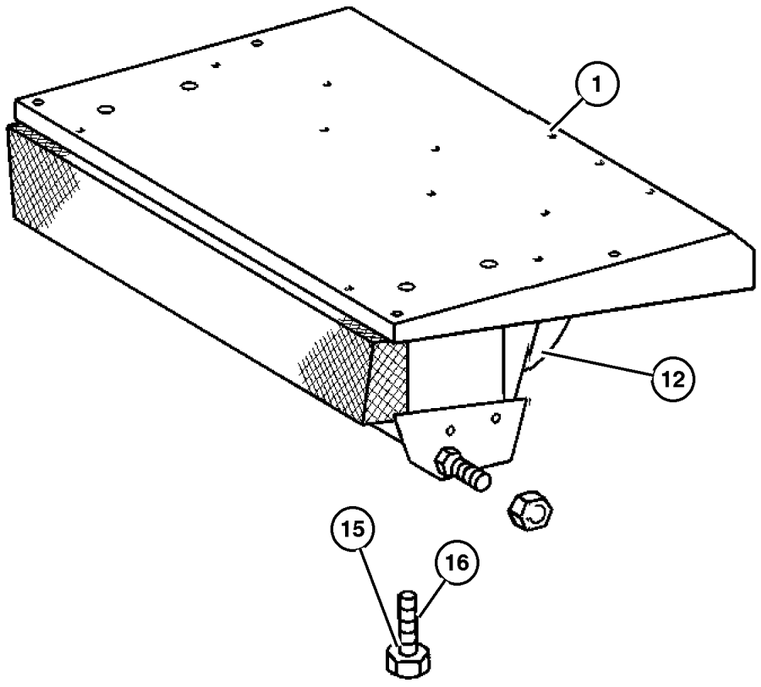

ITEM	PART NUMBER	QTY	LINE	SERIES	BODY	ENGINE	TRANS	TRIM	DESCRIPTION
	5127 838AA-	1	2, 6		11, 12, 14, 15, 16	EX8			
		1	2, 6		51, 52, 54, 55, 56	EX8			
-9									VALVE
	5133 464AA-	1	2, 6		11, 12, 14, 15, 16	EX8			
		1	2, 6		51, 52, 54, 55, 56	EX8			
-10									FILTER, A/C and Heater Unit
	5103 546AA-	1	2, 6		12, 15	EX8			
		1	2, 6		14, 15, 16	EX8			
		1	2, 6		52, 55	EX8			
		1	2, 6		54, 55, 56	EX8			
		1	3, 7		15, 16	EX8			
-11									GRILLE, A/C And Heater
	5124 903AA-	2	2, 6		01, 02, 06	EX8			
		2	3, 7		02, 06	EX8			
12									MOTOR, Blower
	5133 460AA	1	2, 6		11, 12, 14, 15, 16	EX8			
		1	2, 6		51, 52, 54, 55, 56	EX8			
-13									RING
	5133 456AA-	8	2, 6		12, 15	EX8			
		8	2, 6		14, 15, 16	EX8			
-14									MAGNET
	5133 465AA-	1	2, 6		11, 12, 14, 15, 16	EX8			
		1	2, 6		51, 52, 54, 55, 56	EX8			
15									WASHER

Refer to Model Legend Information Bookmark

AR = Use as required - = Non illustrated part # = New this model year

March 3, 2006

« RETURN TO GROUP INDEX

Condenser, Fan Roof
Figure 024-285

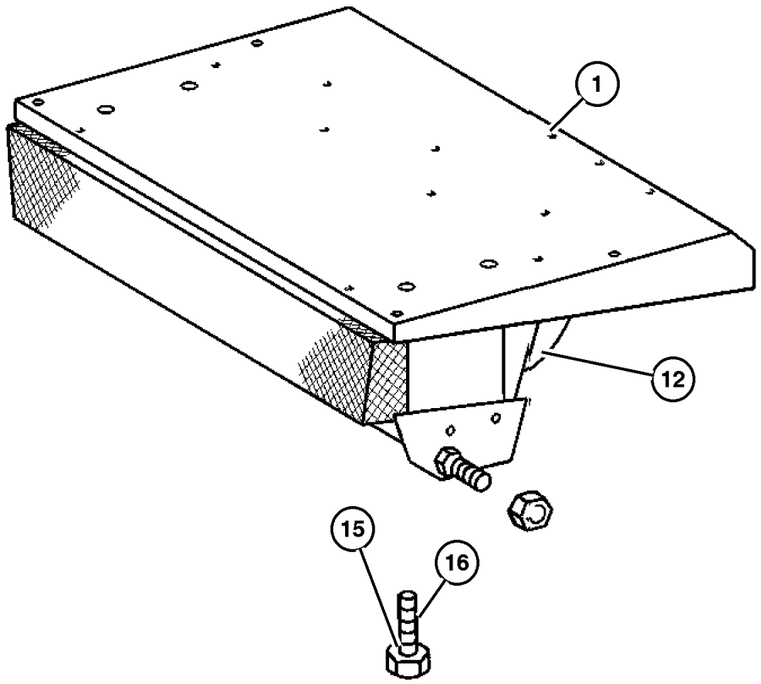

ITEM	PART NUMBER	QTY	LINE	SERIES	BODY	ENGINE	TRANS	TRIM	DESCRIPTION
	5133 455AA	8	2, 6		14, 15, 16	EX8			
		8	2, 6		52, 55	EX8			
		8	2, 6		54, 55, 56	EX8			
		8	2, 6		12, 15	EX8			
		8	3, 7		15, 16	EX8			
16									SCREW, (NOT SERVICED) (Not Serviced)
-17									CONDENSER, A/C
	5132 357AA-	1	2, 6		11, 12, 14, 15, 16	EX8			
		1	2, 6		51, 52, 54, 55, 56	EX8			
		1	3, 7		12, 15, 16	EX8			

Refer to Model Legend Information Bookmark

AR = Use as required - = Non illustrated part # = New this model year

March 3, 2006

« RETURN TO GROUP INDEX

Auxiliary Warm Water Heater
Figure 024-290

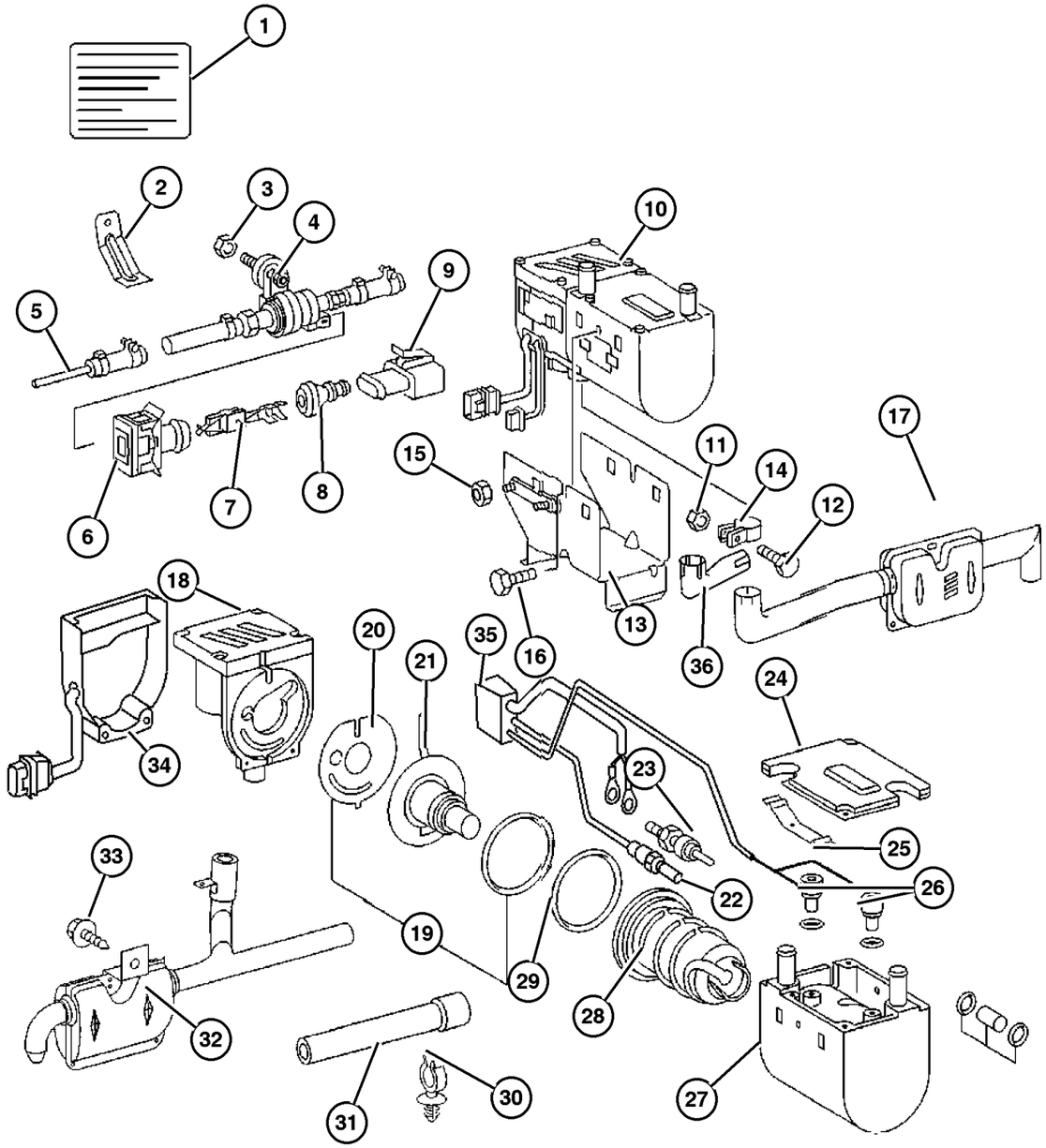

ITEM	PART NUMBER	QTY	LINE	SERIES	BODY	ENGINE	TRANS	TRIM	DESCRIPTION
1									LABEL, Fuel
	5104 152AA	1	2, 6		01, 02, 06	EX8			
		1	2, 6		11, 12, 14, 15, 16	EX8			
		1	2, 6		51, 52, 54, 55, 56	EX8			
		1	3, 7		02, 06	EX8			
		1	3, 7		12, 15, 16	EX8			
2									BRACKET
	5119 706AA	1	2, 6		01, 02, 06	EX8			
		1	2, 6		11, 12, 14, 15, 16	EX8			
		1	2, 6		51, 52, 54, 55, 56	EX8			
		1	3, 7		02, 06	EX8			
		1	3, 7		12, 15, 16	EX8			
3									NUT, Hex, M6
	5096 978AA	1	2, 6		01, 02, 06	EX8			
		1	2, 6		11, 12, 14, 15, 16	EX8			
		1	2, 6		51, 52, 54, 55, 56	EX8			
		1	3, 7		02, 06	EX8			
		1	3, 7		12, 15, 16	EX8			
4									PUMP, Water
	5124 900AA	1	2, 6		01, 02, 06	EX8			
		1	2, 6		11, 12, 14, 15, 16	EX8			
		1	2, 6		51, 52, 54, 55, 56	EX8			

Refer to Model Legend Information Bookmark

AR = Use as required - = Non illustrated part # = New this model year

March 3, 2006

« RETURN TO GROUP INDEX

»

Auxiliary Warm Water Heater
Figure 024-290

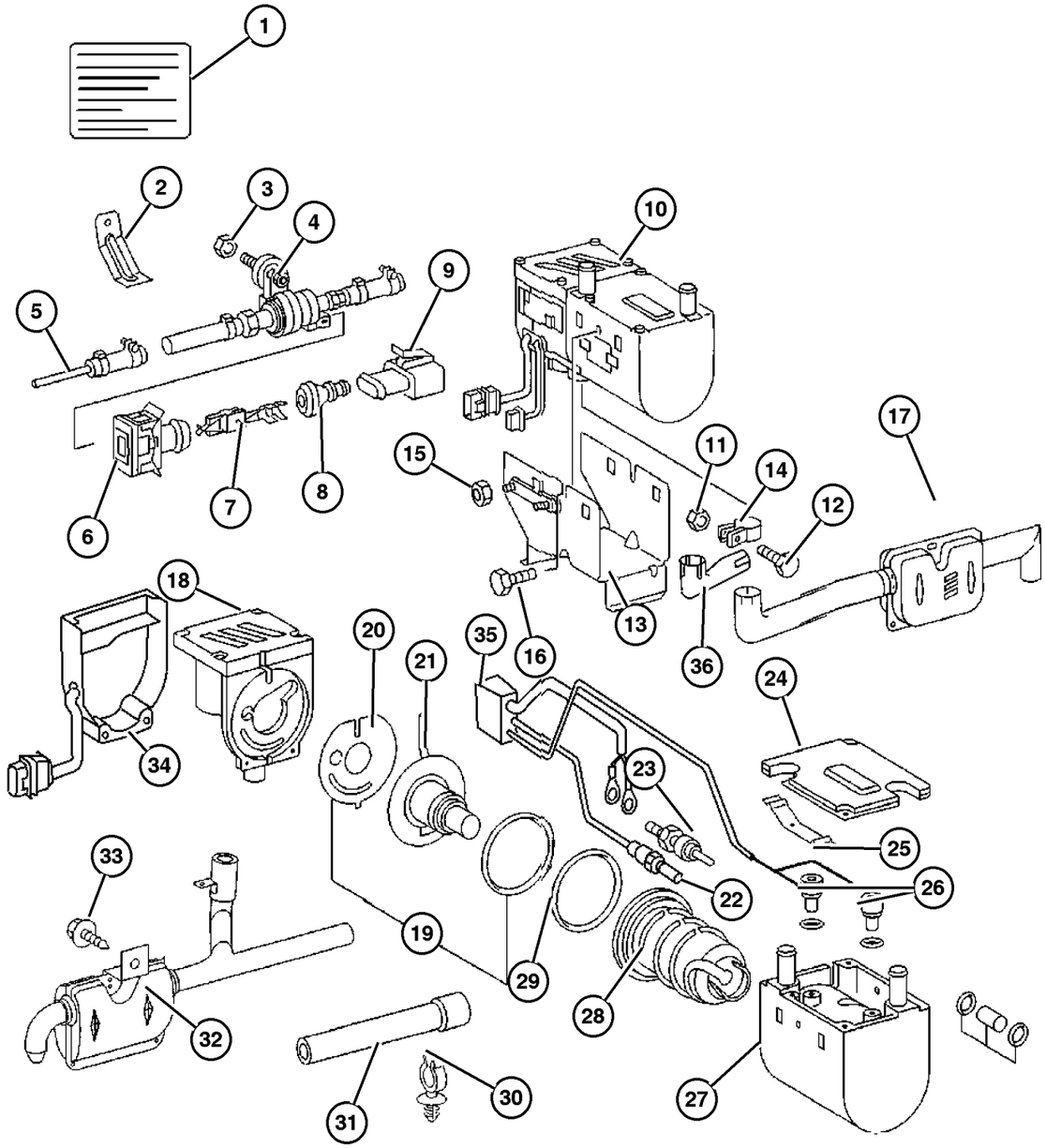

ITEM	PART NUMBER	QTY	LINE	SERIES	BODY	ENGINE	TRANS	TRIM	DESCRIPTION
		1	3, 7		02, 06	EX8			
		1	3, 7		12, 15, 16	EX8			
5									LINE, Heater
	5124 631AA	1	2, 6		01, 02, 06	EX8			
		1	2, 6		11, 12, 14, 15, 16	EX8			
		1	2, 6		51, 52, 54, 55, 56	EX8			
		1	3, 7		02, 06	EX8			
		1	3, 7		12, 15, 16	EX8			
6									CONNECTOR
	5120 679AA	2	2, 6		01, 02, 06	EX8			
		2	2, 6		11, 12, 14, 15, 16	EX8			
		2	2, 6		51, 52, 54, 55, 56	EX8			
		2	3, 7		02, 06	EX8			
		2	3, 7		12, 15, 16	EX8			
7									TERMINAL
	5103 880AA	99	2, 6		01, 02, 06	EX8			
		99	2, 6		11, 12, 14, 15, 16	EX8			
		99	2, 6		51, 52, 54, 55, 56	EX8			
		99	3, 7		02, 06	EX8			
		99	3, 7		12, 15, 16	EX8			
8									BOOT
	5120 881AA	1	2, 6		01, 02, 06	EX8			
		1	2, 6		11, 12, 14, 15, 16	EX8			

Refer to Model Legend Information Bookmark

AR = Use as required - = Non illustrated part # = New this model year

March 3, 2006

« RETURN TO GROUP INDEX

Auxiliary Warm Water Heater
Figure 024-290

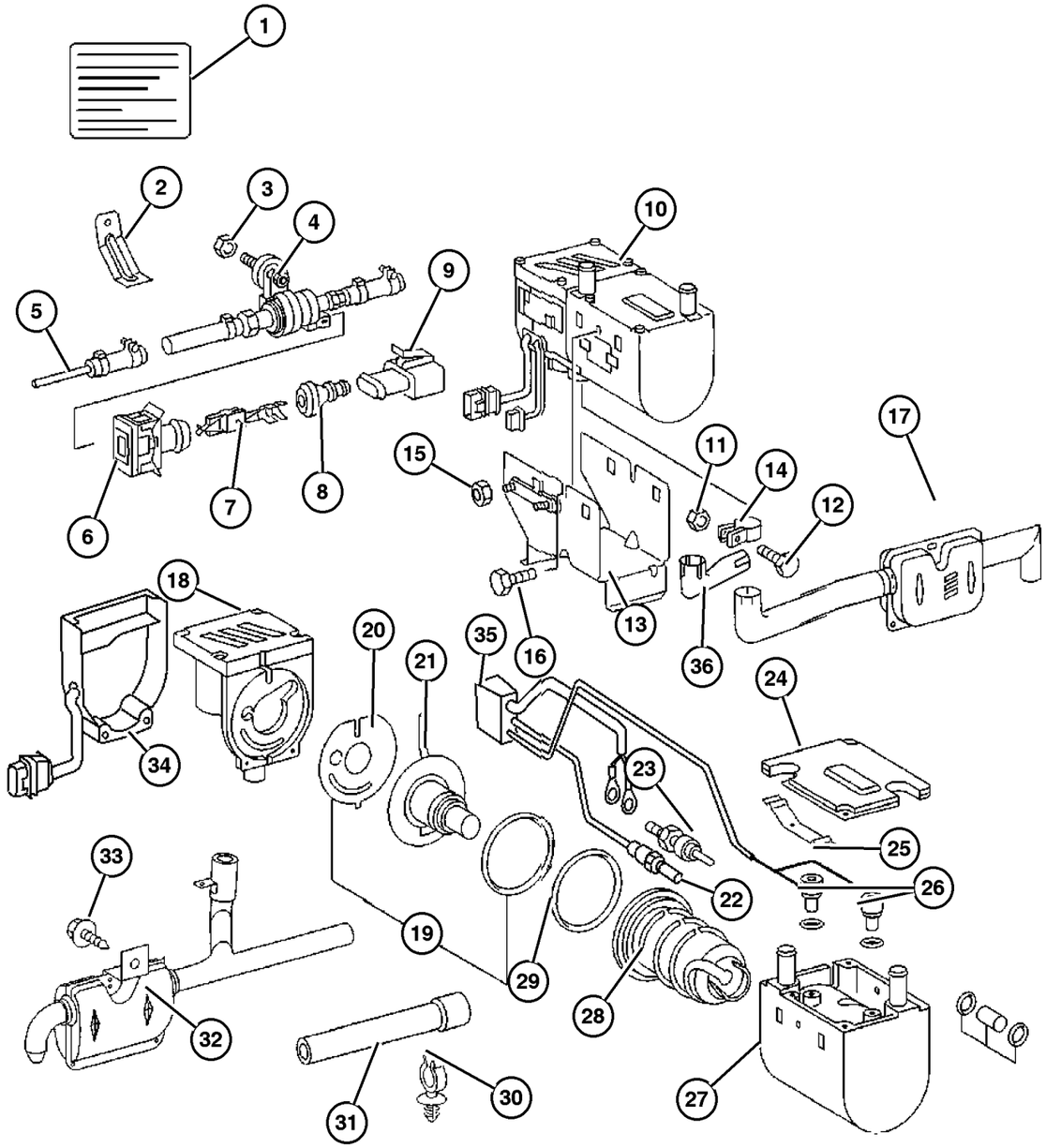

ITEM	PART NUMBER	QTY	LINE	SERIES	BODY	ENGINE	TRANS	TRIM	DESCRIPTION
		1	2, 6		51, 52, 54, 55, 56	EX8			
		1	3, 7		02, 06	EX8			
		1	3, 7		12, 15, 16	EX8			
9	5133 296AA	1	2, 6		01, 02, 06	EX8			CONNECTOR
		1	2, 6		11, 12, 14, 15, 16	EX8			
		1	2, 6		51, 52, 54, 55, 56	EX8			
		1	3, 7		02, 06	EX8			
		1	3, 7		12, 15, 16	EX8			
10	5124 687AA		2, 6		01, 02, 06	EX8			HEATER, Supplemental Diesel Fuel
			2, 6		11, 12, 14, 15, 16	EX8			
			2, 6		51, 52, 54, 55, 56	EX8			
			3, 7		02, 06	EX8			
			3, 7		12, 15, 16	EX8			
11	5133 317AA	1	2, 6		01, 02, 06	EX8			NUT
		1	2, 6		11, 12, 14, 15, 16	EX8			
		1	2, 6		51, 52, 54, 55, 56	EX8			
		1	3, 7		02, 06	EX8			
		1	3, 7		12, 15, 16	EX8			
12	5133 316AA	1	2, 6		01, 02, 06	EX8			BOLT

Refer to Model Legend Information Bookmark

AR = Use as required - = Non illustrated part # = New this model year

March 3, 2006

« RETURN TO GROUP INDEX

Auxiliary Warm Water Heater
Figure 024-290

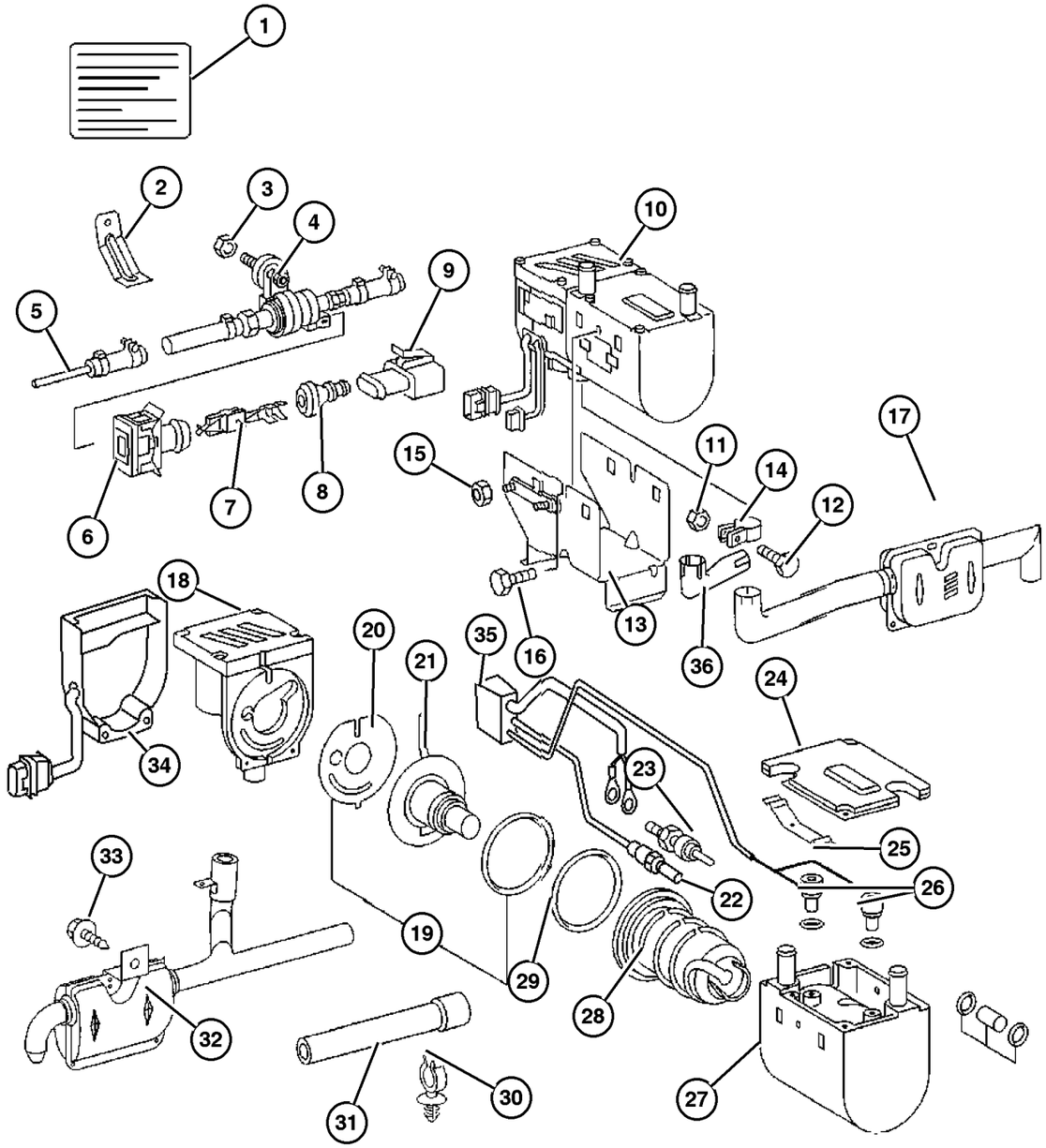

ITEM	PART NUMBER	QTY	LINE	SERIES	BODY	ENGINE	TRANS	TRIM	DESCRIPTION
		1	2, 6		11, 12, 14, 15, 16	EX8			
		1	2, 6		51, 52, 54, 55, 56	EX8			
		1	3, 7		02, 06	EX8			
		1	3, 7		12, 15, 16	EX8			
13									BRACKET, Heater Core
	5124 626AA	1	2, 6		01, 02, 06	EX8			
		1	2, 6		11, 12, 14, 15, 16	EX8			
		1	2, 6		51, 52, 54, 55, 56	EX8			
		1	3, 7		02, 06	EX8			
		1	3, 7		12, 15, 16	EX8			
14									CLAMP, Exhaust
	5103 627AA	1	2, 6		01, 02, 06	EX8			
		1	2, 6		11, 12, 14, 15, 16	EX8			
		1	2, 6		51, 52, 54, 55, 56	EX8			
		1	3, 7		02, 06	EX8			
		1	3, 7		12, 15, 16	EX8			
15									NUT, Hex
	5097 674AA	1	2, 6		01, 02, 06	EX8			
		1	2, 6		11, 12, 14, 15, 16	EX8			
		1	2, 6		51, 52, 54, 55, 56	EX8			
		1	3, 7		02, 06	EX8			
		1	3, 7		12, 15, 16	EX8			
16									SCREW

Refer to Model Legend Information Bookmark

AR = Use as required - = Non illustrated part # = New this model year

March 3, 2006

« RETURN TO GROUP INDEX

Auxiliary Warm Water Heater
Figure 024-290

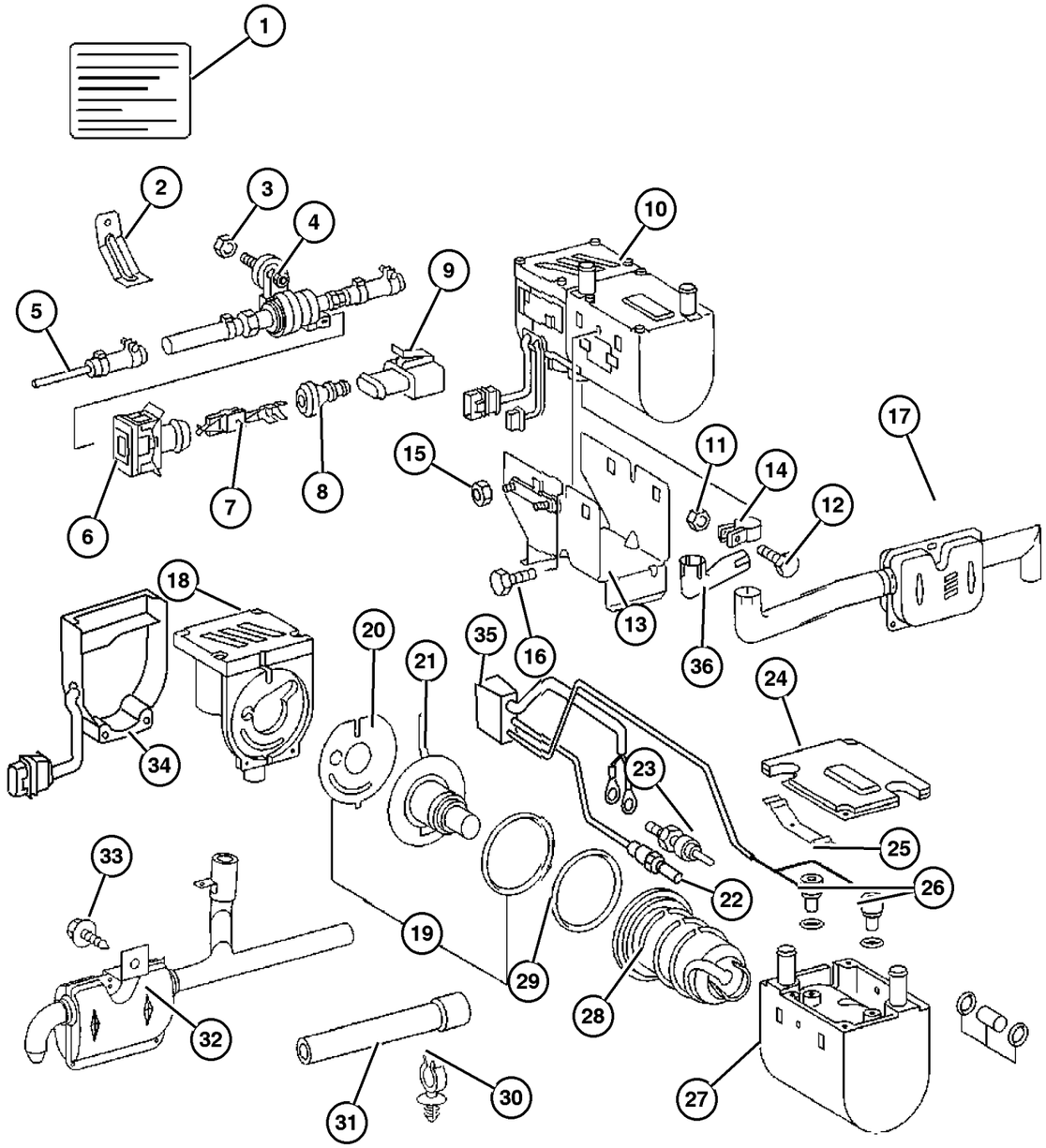

ITEM	PART NUMBER	QTY	LINE	SERIES	BODY	ENGINE	TRANS	TRIM	DESCRIPTION
	6104 003AA	2	2, 6		01, 02, 06	EX8			
		2	2, 6		11, 12, 14, 15, 16	EX8			
		2	2, 6		51, 52, 54, 55, 56	EX8			
		2	3, 7		02, 06	EX8			
		2	3, 7		12, 15, 16	EX8			
17									MUFFLER, Exhaust
	5143 178AA	1	2, 6		01, 02, 06	EX8			
		1	2, 6		11, 12, 14, 15, 16	EX8			
		1	2, 6		51, 52, 54, 55, 56	EX8			
		1	3, 7		02, 06	EX8			
		1	3, 7		12, 15, 16	EX8			
18									BLOWER
	5133 435AA	1	2, 6		01, 02, 06	EX8			
		1	2, 6		11, 12, 14, 15, 16	EX8			
		1	2, 6		51, 52, 54, 55, 56	EX8			
		1	3, 7		02, 06	EX8			
		1	3, 7		12, 15, 16	EX8			
19									SEAL
	5133 307AB	1	2, 6		01, 02, 06	EX8			
		1	2, 6		11, 12, 14, 15, 16	EX8			
		1	2, 6		51, 52, 54, 55, 56	EX8			
		1	3, 7		02, 06	EX8			

Refer to Model Legend Information Bookmark

AR = Use as required - = Non illustrated part # = New this model year

March 3, 2006

« RETURN TO GROUP INDEX

Auxiliary Warm Water Heater
Figure 024-290

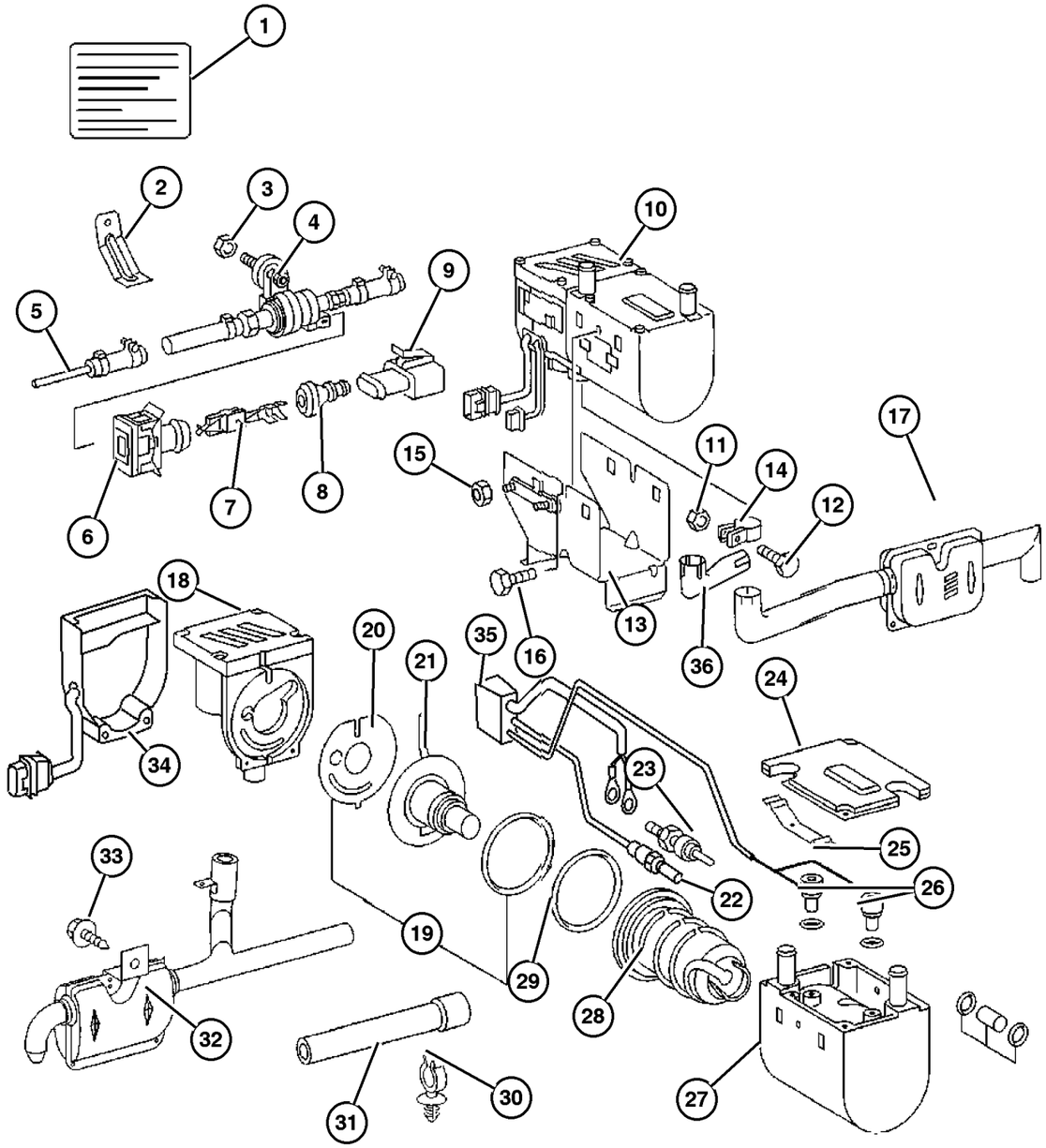

ITEM	PART NUMBER	QTY	LINE	SERIES	BODY	ENGINE	TRANS	TRIM	DESCRIPTION
		1	3, 7		12, 15, 16	EX8			
20	5133 301AA	1	2, 6		01, 02, 06				PIPE, Heater Core
		1	2, 6		11, 12, 14, 15, 16				
		1	2, 6		51, 52, 54, 55, 56				
		1	3, 7		02, 06				
		1	3, 7		12, 15, 16				
21	5133 312AA	1	2, 6		01, 02, 06	EX8			SENSOR, Temperature
		1	2, 6		11, 12, 14, 15, 16	EX8			
		1	2, 6		51, 52, 54, 55, 56	EX8			
		1	3, 7		02, 06	EX8			
		1	3, 7		12, 15, 16	EX8			
22	5103 691AA	1	2, 6		01, 02, 06	EX8			SENSOR, Temperature
		1	2, 6		11, 12, 14, 15, 16	EX8			
		1	2, 6		51, 52, 54, 55, 56	EX8			
		1	3, 7		02, 06	EX8			
		1	3, 7		12, 15, 16	EX8			
23	5133 310AA	1	2, 6		01, 02, 06				PLUG, Water Heater
		1	2, 6		11, 12, 14, 15, 16				

Refer to Model Legend Information Bookmark

AR = Use as required - = Non illustrated part # = New this model year

March 3, 2006

« RETURN TO GROUP INDEX

Auxiliary Warm Water Heater
Figure 024-290

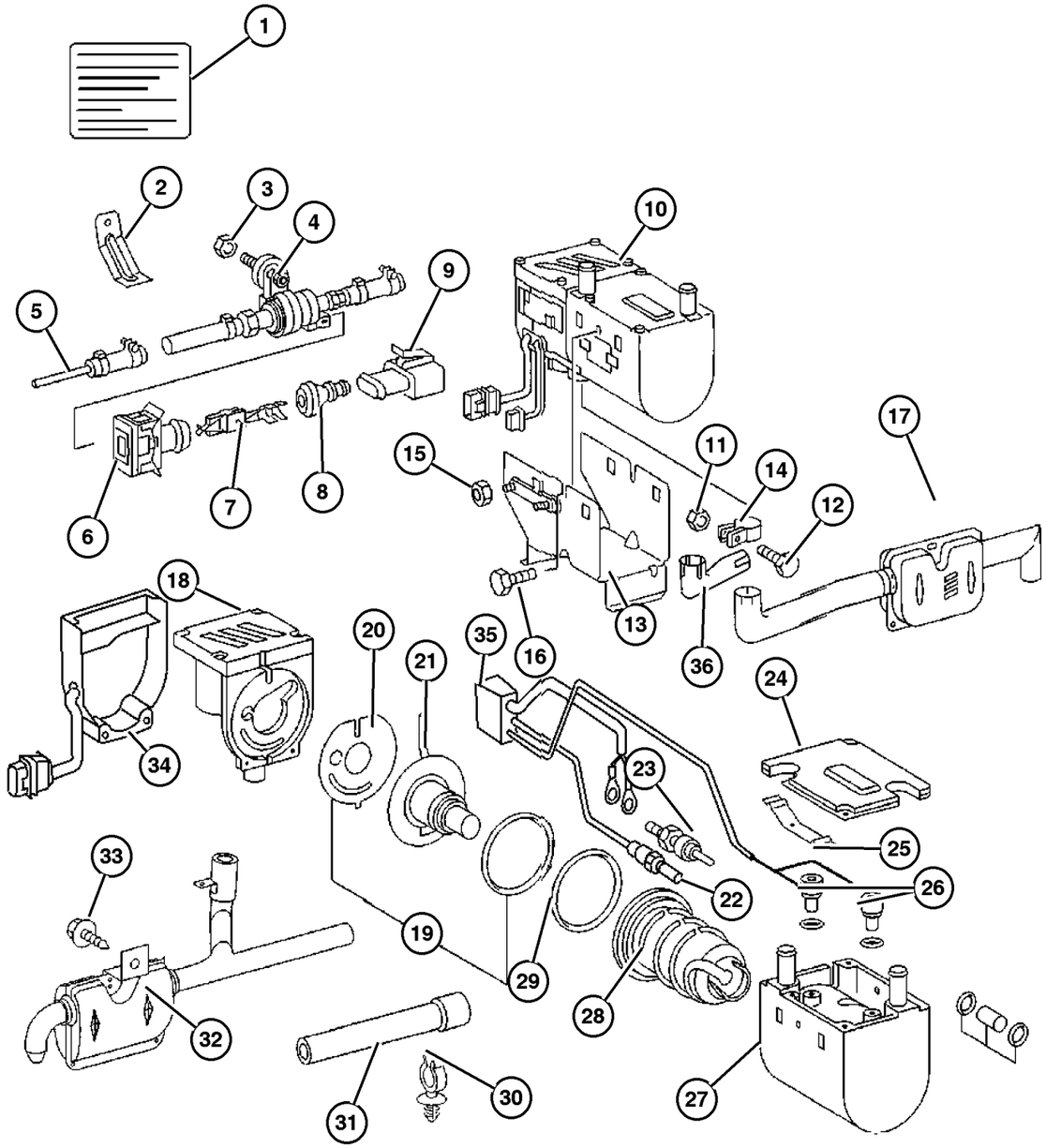

ITEM	PART NUMBER	QTY	LINE	SERIES	BODY	ENGINE	TRANS	TRIM	DESCRIPTION
		1	2, 6		51, 52, 54, 55, 56				
		1	3, 7		02, 06				
		1	3, 7		12, 15, 16				
24	5133 306AA	1	2, 6		01, 02, 06	EX8			COVER, Heater Housing
		1	2, 6		11, 12, 14, 15, 16	EX8			
		1	2, 6		51, 52, 54, 55, 56	EX8			
		1	3, 7		02, 06	EX8			
		1	3, 7		12, 15, 16	EX8			
25	5097 670AA	1	2, 6		01, 02, 06	EX8			CLIP, Spring
		1	2, 6		11, 12, 14, 15, 16	EX8			
		1	2, 6		51, 52, 54, 55, 56	EX8			
		1	3, 7		02, 06	EX8			
		1	3, 7		12, 15, 16	EX8			
26	5143 176AA	2	2, 6		01, 02, 06	EX8			O RING
		2	2, 6		11, 12, 14, 15, 16	EX8			
		2	2, 6		51, 52, 54, 55, 56	EX8			
		2	3, 7		02, 06	EX8			
		2	3, 7		12, 15, 16	EX8			
27	5133 298AA	1	2, 6		01, 02, 06	EX8			HOUSING, Heater

Refer to Model Legend Information Bookmark

AR = Use as required - = Non illustrated part # = New this model year

March 3, 2006

« RETURN TO GROUP INDEX

Auxiliary Warm Water Heater
Figure 024-290

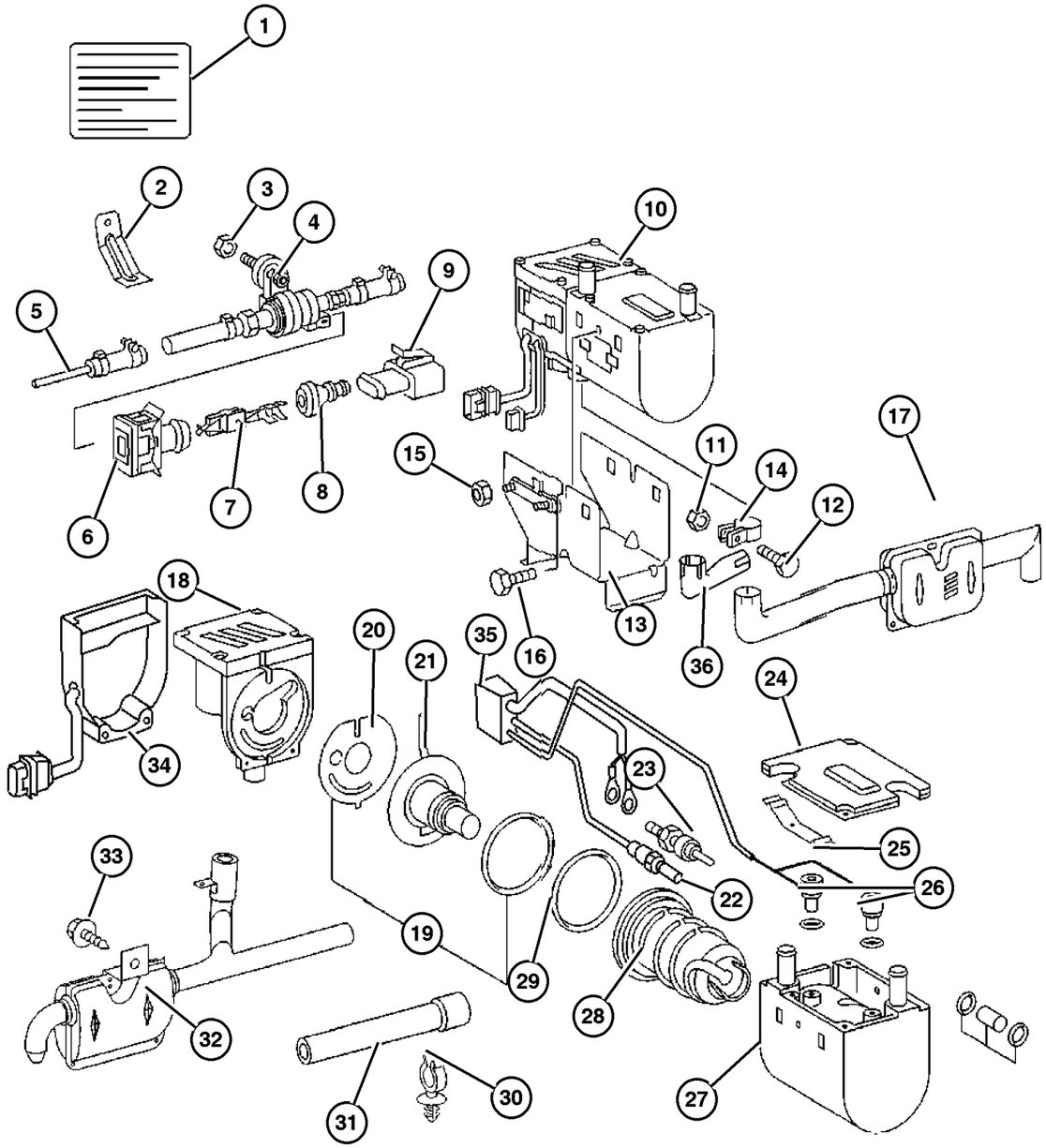

ITEM	PART NUMBER	QTY	LINE	SERIES	BODY	ENGINE	TRANS	TRIM	DESCRIPTION
		1	2, 6		11, 12, 14, 15, 16	EX8			
		1	2, 6		51, 52, 54, 55, 56	EX8			
		1	3, 7		02, 06	EX8			
		1	3, 7		12, 15, 16	EX8			
28									CORE, Water Heater
	5133 303AA	1	2, 6		01, 02, 06				
		1	2, 6		11, 12, 14, 15, 16				
		1	2, 6		51, 52, 54, 55, 56				
		1	3, 7		02, 06				
		1	3, 7		12, 15, 16				
29									O RING, Heater Core
	5133 309AA	1	2, 6		01, 02, 06				
		1	2, 6		11, 12, 14, 15, 16				
		1	2, 6		51, 52, 54, 55, 56				
		1	3, 7		02, 06				
		1	3, 7		12, 15, 16				
30									CLIP, Hose
	5119 332AA	3	2, 6		01, 02, 06	EX8			
		3	2, 6		11, 12, 14, 15, 16	EX8			
		3	2, 6		51, 52, 54, 55, 56	EX8			
		3	3, 7		02, 06	EX8			
		3	3, 7		12, 15, 16	EX8			
31									PIPE, Air Intake

Refer to Model Legend Information Bookmark

AR = Use as required - = Non illustrated part # = New this model year

March 3, 2006

« RETURN TO GROUP INDEX

Auxiliary Warm Water Heater
Figure 024-290

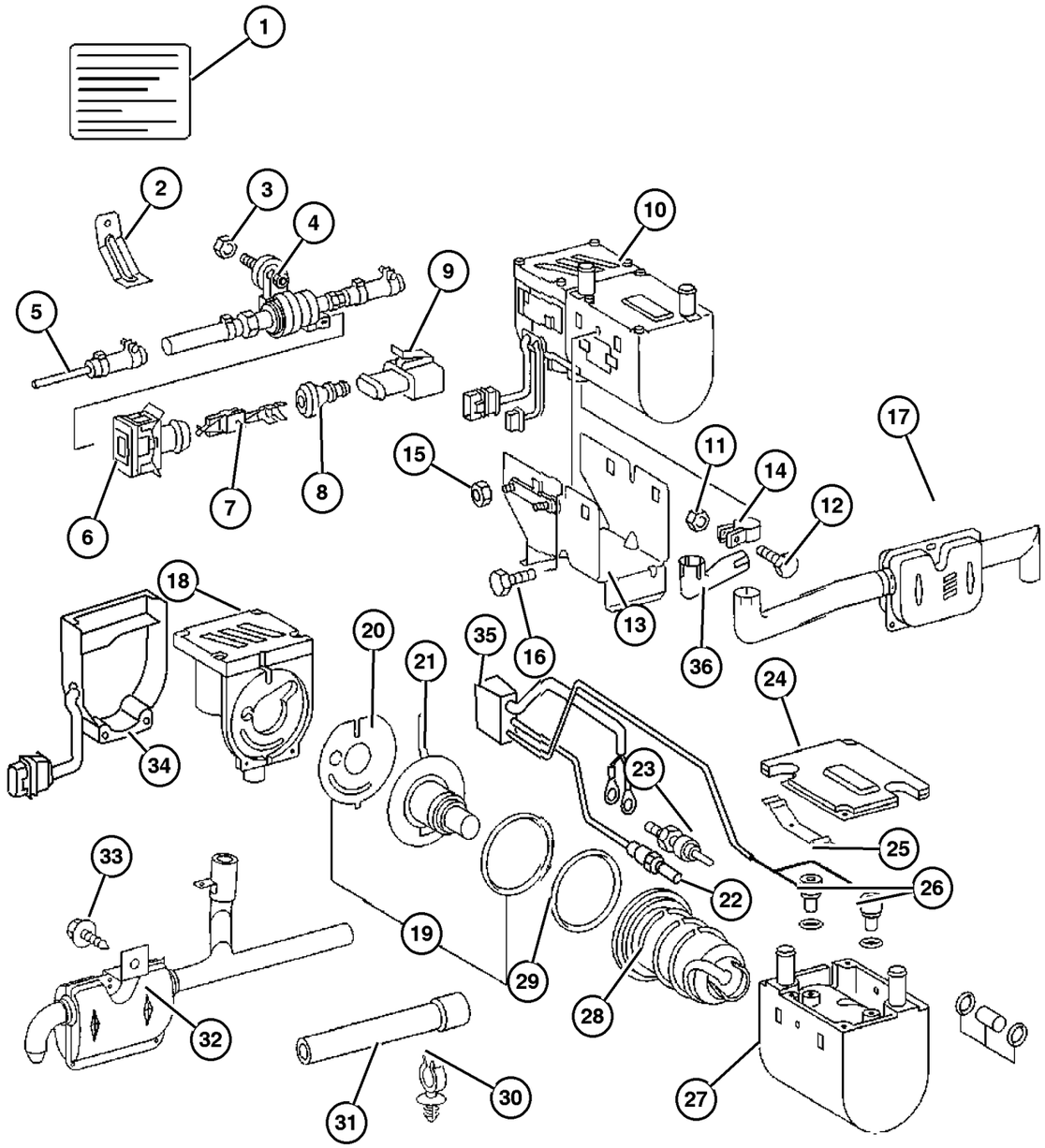

ITEM	PART NUMBER	QTY	LINE	SERIES	BODY	ENGINE	TRANS	TRIM	DESCRIPTION
	5124 674AA	1	2, 6		01, 02, 06	EX8			
		1	2, 6		11, 12, 14, 15, 16	EX8			
		1	2, 6		51, 52, 54, 55, 56	EX8			
		1	3, 7		02, 06	EX8			
		1	3, 7		12, 15, 16	EX8			
32									MUFFLER, Exhaust
	5103 848AA	1	2, 6		01, 02, 06	EX8			
		1	2, 6		11, 12, 14, 15, 16	EX8			
		1	2, 6		51, 52, 54, 55, 56	EX8			
		1	3, 7		02, 06	EX8			
		1	3, 7		12, 15, 16	EX8			
33									SCREW, Tapping
	6104 580AA	1	2, 6		01, 02, 06	EX8			
		1	2, 6		11, 12, 14, 15, 16	EX8			
		1	2, 6		51, 52, 54, 55, 56	EX8			
		1	3, 7		02, 06	EX8			
		1	3, 7		12, 15, 16	EX8			
34									CONTROL UNIT, Air Conditiing
	5103 648AA	1	2, 6		01, 02, 06	EX8			
		1	2, 6		11, 12, 14, 15, 16	EX8			
		1	2, 6		51, 52, 54, 55, 56	EX8			
		1	3, 7		02, 06	EX8			

Refer to Model Legend Information Bookmark

AR = Use as required - = Non illustrated part # = New this model year

March 3, 2006

« RETURN TO GROUP INDEX

Auxiliary Warm Water Heater
Figure 024-290

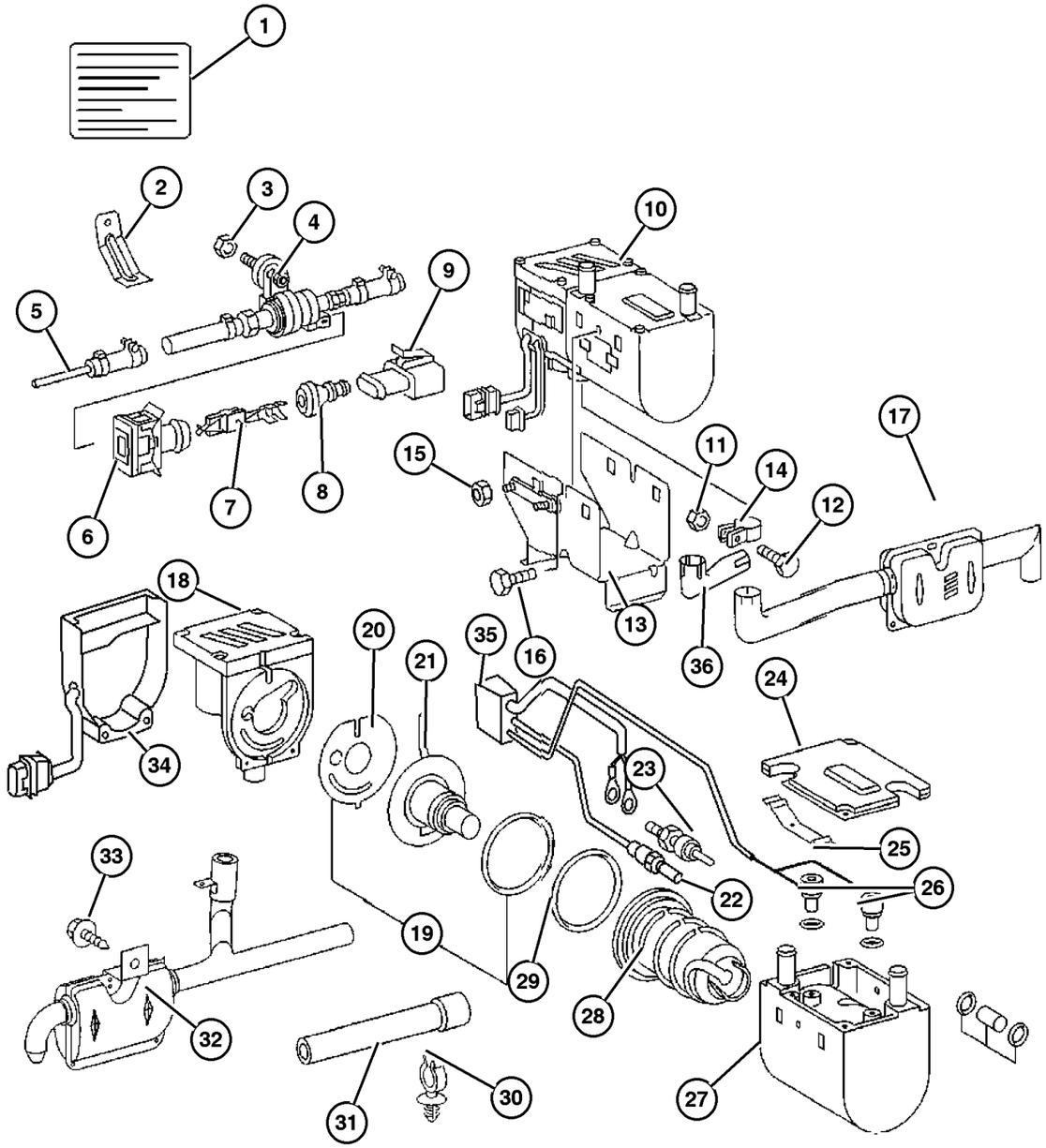

ITEM	PART NUMBER	QTY	LINE	SERIES	BODY	ENGINE	TRANS	TRIM	DESCRIPTION
		1	3, 7		12, 15, 16	EX8			
35	5133 305AA	1	2, 6		01, 02, 06	EX8			MODULE, Heater Control
		1	2, 6		11, 12, 14, 15, 16	EX8			
		1	2, 6		51, 52, 54, 55, 56	EX8			
		1	3, 7		02, 06	EX8			
		1	3, 7		12, 15, 16	EX8			
36	5133 318AA	1	2, 6		01, 02, 06	EX8			TUBE, Heater Core
		1	2, 6		11, 12, 14, 15, 16	EX8			
		1	2, 6		51, 52, 54, 55, 56	EX8			
		1	3, 7		02, 06	EX8			
		1	3, 7		12, 15, 16	EX8			

Refer to Model Legend Information Bookmark

AR = Use as required - = Non illustrated part # = New this model year

March 3, 2006

« RETURN TO GROUP INDEX

Control
Figure 024-320

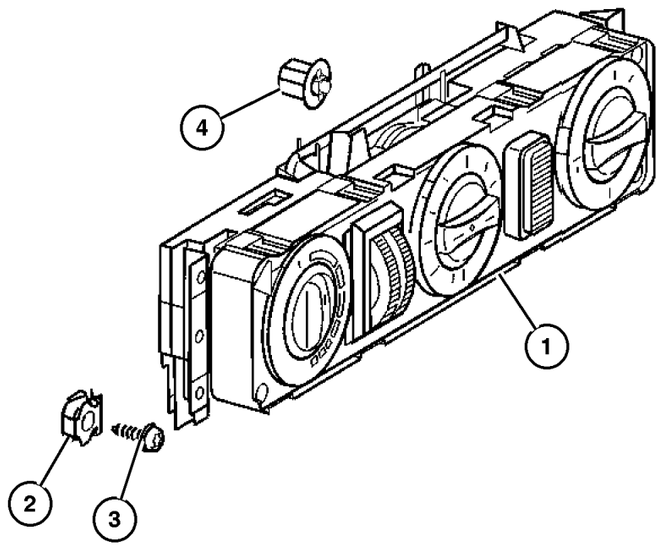

ITEM	PART NUMBER	QTY	LINE	SERIES	BODY	ENGINE	TRANS	TRIM	DESCRIPTION
1									CONTROL, A/C And Heater
	5103 643AA	1	2, 6		01, 02, 06	EX8			[HAB]
		1	2, 6		11, 12, 14, 15, 16	EX8			[HAB]
		1	2, 6		51, 52, 54, 55, 56	EX8			[HAB]
		1	3, 7		02, 06	EX8			[HAB]
		1	3, 7		12, 15, 16	EX8			[HAB]
	5103 644AA	1	2, 6		01, 02, 06	EX8			[HAB+3JV]
		1	2, 6		11, 12, 14, 15, 16	EX8			[HAB+3JV]
		1	2, 6		51, 52, 54, 55, 56	EX8			[HAB+3JV]
		1	3, 7		02, 06	EX8			[HAB+3JV]
		1	3, 7		12, 15, 16	EX8			[HAB+3JV]
	5103 690AA	1	2, 6		01, 02, 06	EX8			[-HAB+3JV]
		1	2, 6		11, 12, 14, 15, 16	EX8			[-HAB+3JV]
		1	2, 6		51, 52, 54, 55, 56	EX8			[-HAB+3JV]
		1	3, 7		02, 06	EX8			[-HAB+3JV]
		1	3, 7		12, 15, 16	EX8			[-HAB+3JV]
2									NUT, Spring
	5125 861AA	4	2, 6		01, 02, 06	EX8			
		4	2, 6		11, 12, 14, 15, 16	EX8			
		4	2, 6		51, 52, 54, 55, 56	EX8			
		4	3, 7		02, 06	EX8			

Refer to Model Legend Information Bookmark

AR = Use as required - = Non illustrated part # = New this model year

March 3, 2006

« RETURN TO GROUP INDEX

»

Control
Figure 024-320

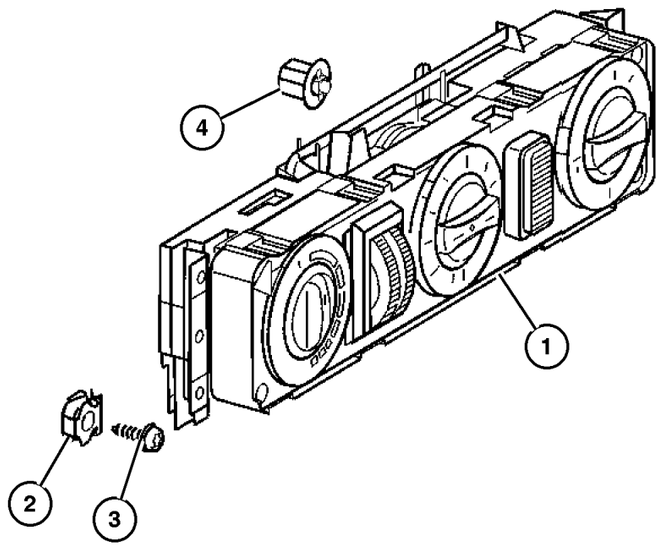

ITEM	PART NUMBER	QTY	LINE	SERIES	BODY	ENGINE	TRANS	TRIM	DESCRIPTION
		4	3, 7		12, 15, 16	EX8			
3	6104 010AA	2	2, 6		11, 12, 14, 15, 16	EX8			SCREW
		2	2, 6		51, 52, 54, 55, 56	EX8			
		2	3, 7		12, 15, 16	EX8			
4	5133 468AA	1	2, 6		01, 02, 06	EX8			BULB
		1	2, 6		11, 12, 14, 15, 16	EX8			
		1	2, 6		51, 52, 54, 55, 56	EX8			
		1	3, 7		02, 06	EX8			
		1	3, 7		12, 15, 16	EX8			

Refer to Model Legend Information Bookmark

AR = Use as required - = Non illustrated part # = New this model year

March 3, 2006

« RETURN TO GROUP INDEX

Compressor and Mounting
Figure 024-420

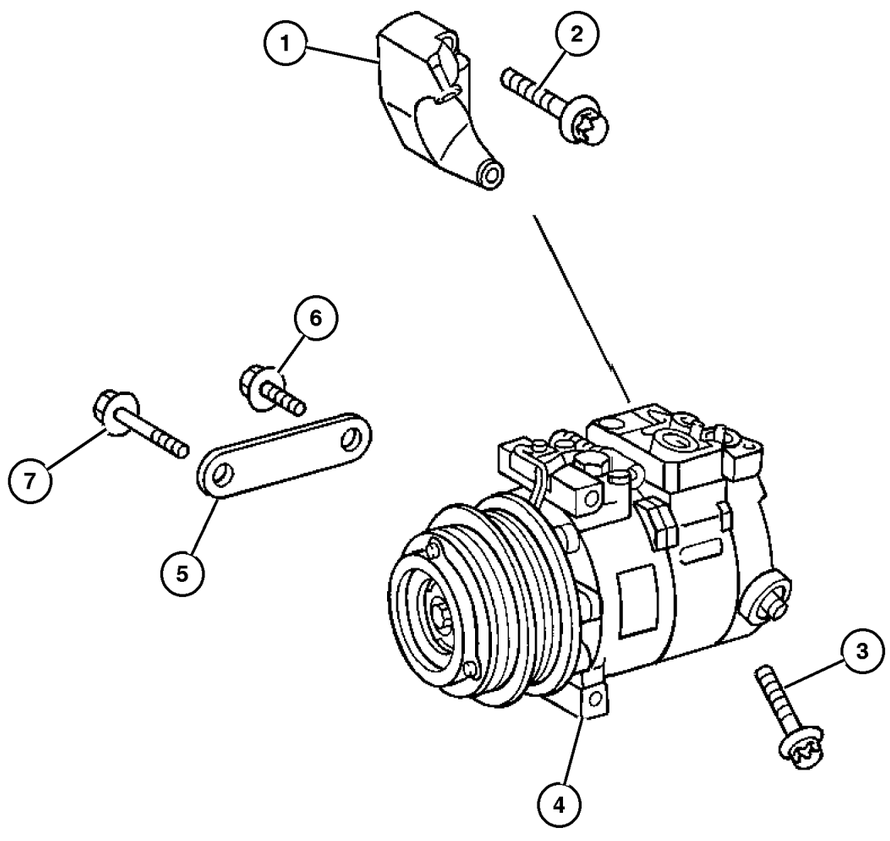

ITEM	PART NUMBER	QTY	LINE	SERIES	BODY	ENGINE	TRANS	TRIM	DESCRIPTION
1	5117 682AA	1	2, 3, 6, 7			EX8			SUPPORT
2									SCREW
	6104 031AA	1	2, 6		01, 02, 06	EX8			
		1	2, 6		11, 12, 14, 15, 16	EX8			
		1	2, 6		51, 52, 54, 55, 56	EX8			
		4	3, 7		02, 06	EX8			
		4	3, 7		12, 15, 16	EX8			
3									SCREW
	6104 035AA	2	2, 6		01, 02, 06	EX8			
		2	2, 6		11, 12, 14, 15, 16	EX8			
		2	2, 6		51, 52, 54, 55, 56	EX8			
		2	3, 7		02, 06	EX8			
		2	3, 7		12, 15, 16	EX8			
4									COMPRESSOR, Air Conditioning
	5117 666AA	1	2, 6		01, 02, 06	EX8			[HAB]
		1	2, 6		11, 12, 14, 15, 16	EX8			[HAB]
		1	2, 6		51, 52, 54, 55, 56	EX8			[HAB]
		1	3, 7		02, 06	EX8			[HAB]
		1	3, 7		12, 15, 16	EX8			[HAB]
	5117 668AA	1	2, 6		11, 12, 14, 15, 16	EX8			[HAD]
		1	2, 6		51, 52, 54, 55, 56	EX8			[HAD]
		1	3, 7		12, 15, 16	EX8			[HAD]
5									BRACKET, A/C Compressor

Refer to Model Legend Information Bookmark

AR = Use as required - = Non illustrated part # = New this model year

March 3, 2006

Compressor and Mounting
Figure 024-420

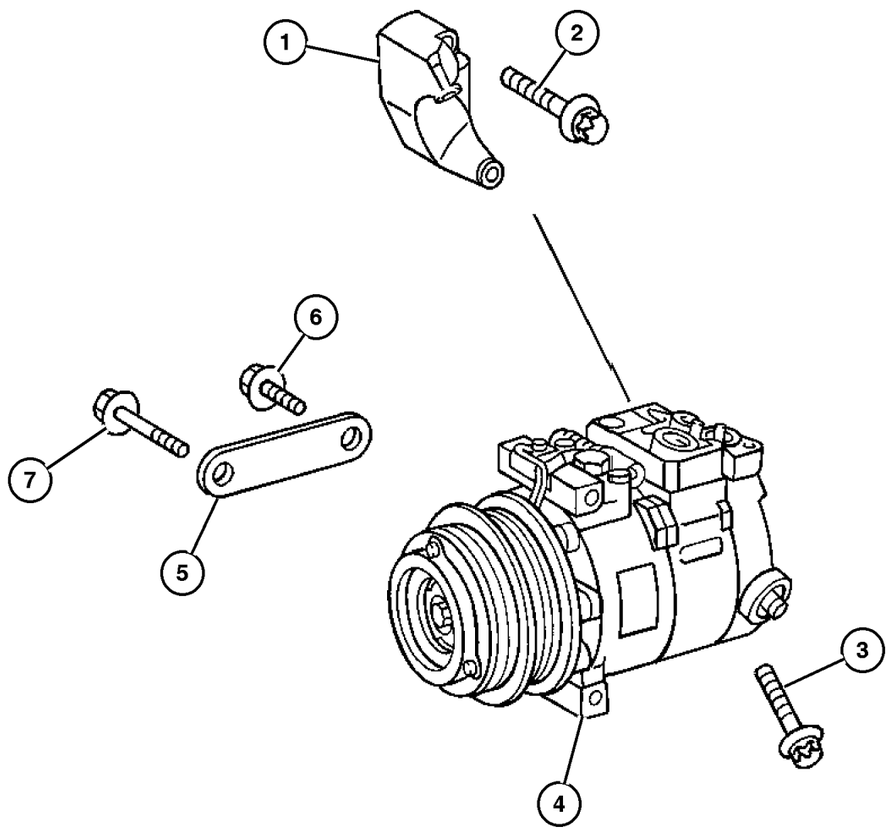

ITEM	PART NUMBER	QTY	LINE	SERIES	BODY	ENGINE	TRANS	TRIM	DESCRIPTION
	5117 686AA	1	2, 6		01, 02, 06	EX8			
		1	2, 6		11, 12, 14, 15, 16	EX8			
		1	2, 6		51, 52, 54, 55, 56	EX8			
		1	3, 7		02, 06	EX8			
		1	3, 7		12, 15, 16	EX8			
6	6104 022AA	3	2, 3, 6, 7			EX8			SCREW
7									SCREW
	6104 036AA	1	2, 6		01, 02, 06	EX8			
		1	2, 6		11, 12, 14, 15, 16	EX8			
		1	2, 6		51, 52, 54, 55, 56	EX8			
		1	3, 7		02, 06	EX8			
		1	3, 7		12, 15, 16	EX8			

Refer to Model Legend Information Bookmark

AR = Use as required - = Non illustrated part # = New this model year

March 3, 2006

« RETURN TO GROUP INDEX

«

Air Ducts And Outlets, Front
Figure 024-630

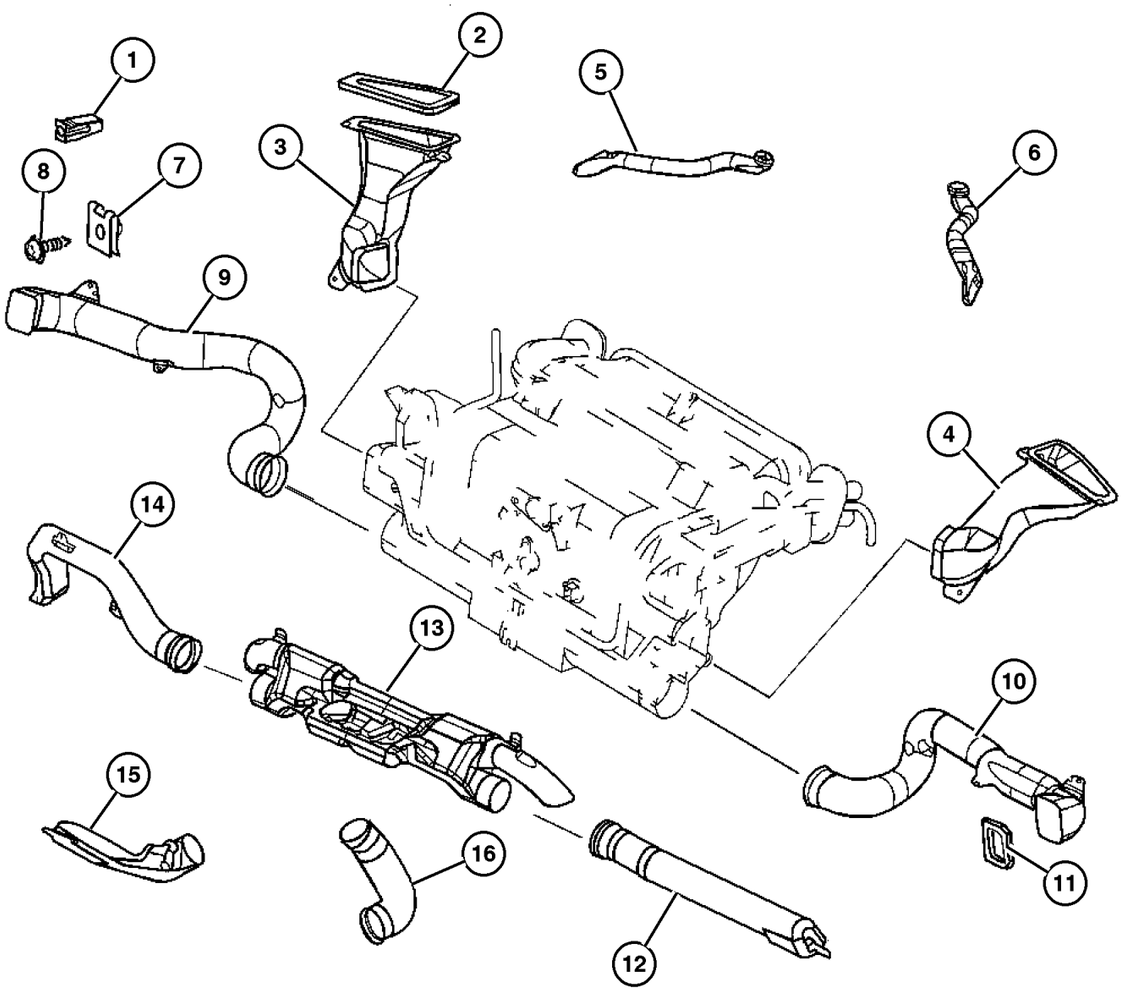

ITEM	PART NUMBER	QTY	LINE	SERIES	BODY	ENGINE	TRANS	TRIM	DESCRIPTION
1									NUT, Plastic Snap-in
	5125 576AA	2	2, 6		01, 02, 06	EX8			
		2	2, 6		11, 12, 14, 15, 16	EX8			
		2	3, 7		02, 06	EX8			
		2	3, 7		12, 15, 16	EX8			
2									SEAL
	5124 781AA	1	2, 6		01, 02, 06	EX8			Left
		1	2, 6		11, 12, 14, 15, 16	EX8			Left
		1	2, 6		51, 52, 54, 55, 56	EX8			Left
		1	3, 7		02, 06	EX8			Left
		1	3, 7		12, 15, 16	EX8			Left
	5124 782AA	1	2, 6		01, 02, 06	EX8			Right
		1	2, 6		11, 12, 14, 15, 16	EX8			Right
		1	2, 6		51, 52, 54, 55, 56	EX8			Right
		1	3, 7		02, 06	EX8			Right
		1	3, 7		12, 15, 16	EX8			Right
3									DUCT, Defroster
	5133 445AA	1	2, 6		01, 02, 06	EX8			
		1	2, 6		11, 12, 14, 15, 16	EX8			
		1	2, 6		51, 52, 54, 55, 56	EX8			
		1	3, 7		02, 06	EX8			
		1	3, 7		12, 15, 16	EX8			
4									DUCT, AIR

Refer to Model Legend Information Bookmark

AR = Use as required - = Non illustrated part # = New this model year

March 3, 2006

« RETURN TO GROUP INDEX

»

Air Ducts And Outlets, Front
Figure 024-630

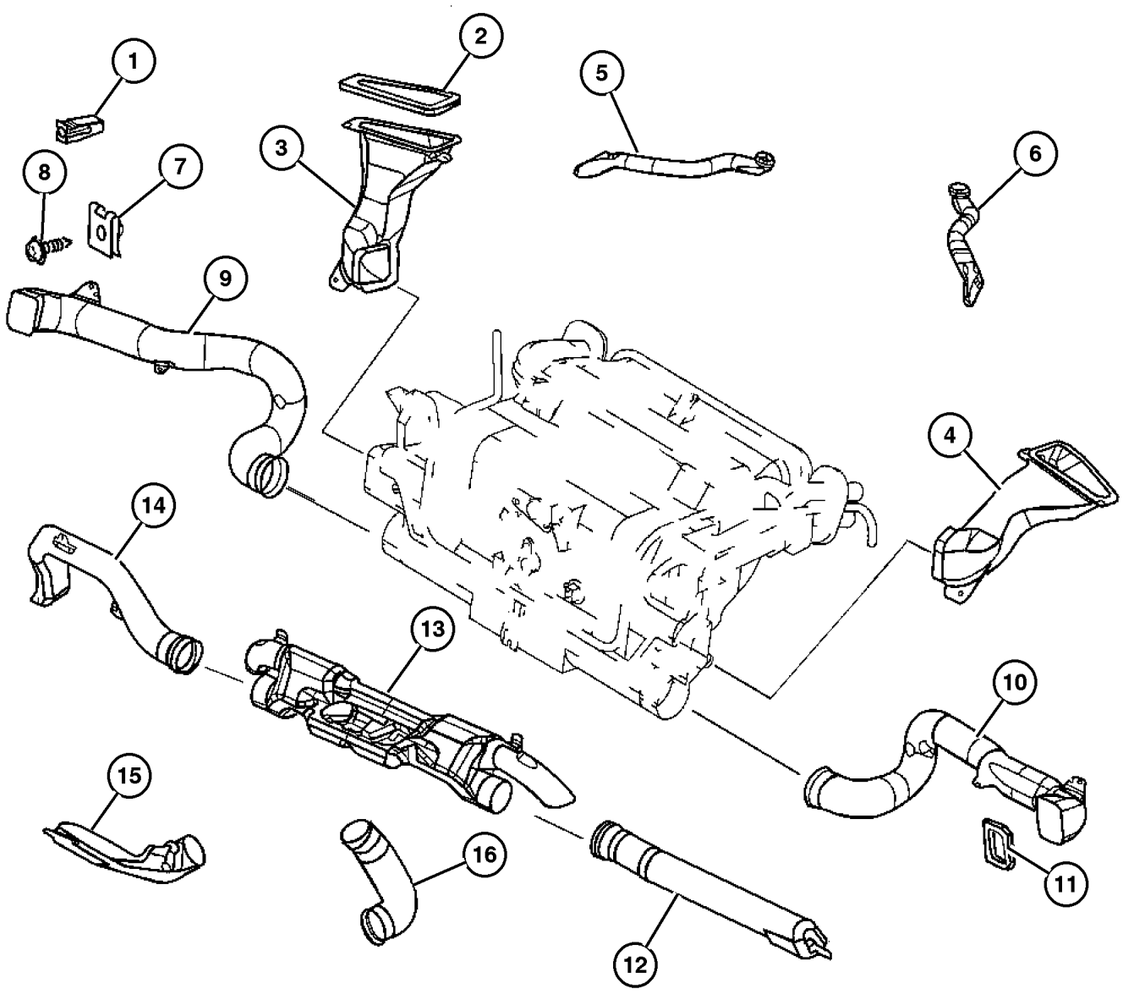

ITEM	PART NUMBER	QTY	LINE	SERIES	BODY	ENGINE	TRANS	TRIM	DESCRIPTION
	5124 749AA	1	2, 6		01, 02, 06	EX8			
		1	2, 6		11, 12, 14, 15, 16	EX8			
		1	2, 6		51, 52, 54, 55, 56	EX8			
		1	3, 7		02, 06	EX8			
		1	3, 7		12, 15, 16	EX8			
5	5124 745AA	1	2, 6		01, 02, 06	EX8			DUCT
		1	2, 6		11, 12, 14, 15, 16	EX8			
		1	2, 6		51, 52, 54, 55, 56	EX8			
		1	3, 7		02, 06	EX8			
		1	3, 7		12, 15, 16	EX8			
6	5124 746AA	1	2, 6		01, 02, 06	EX8			DUCT
		1	2, 6		11, 12, 14, 15, 16	EX8			
		1	2, 6		51, 52, 54, 55, 56	EX8			
		1	3, 7		02, 06	EX8			
		1	3, 7		12, 15, 16	EX8			
7	5125 857AA	2	2, 6		01, 02, 06	EX8			NUT, Clip-On
		2	2, 6		11, 12, 14, 15, 16	EX8			
		2	2, 6		51, 52, 54, 55, 56	EX8			
		2	3, 7		02, 06	EX8			

Refer to Model Legend Information Bookmark

Air Ducts And Outlets, Front
Figure 024-630

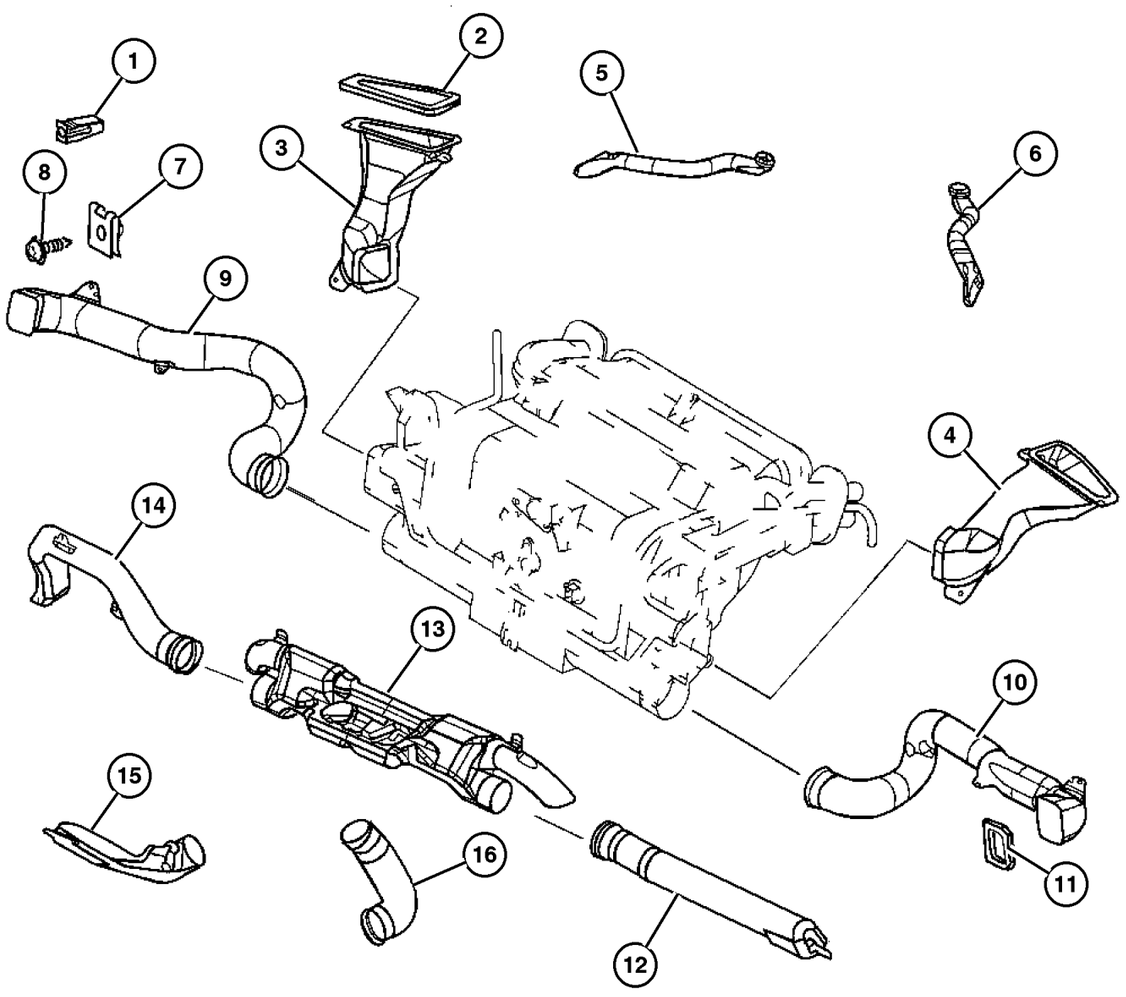

ITEM	PART NUMBER	QTY	LINE	SERIES	BODY	ENGINE	TRANS	TRIM	DESCRIPTION
		2	3, 7		12, 15, 16	EX8			
8	6104 610AA	2	2, 6		01, 02, 06	EX8			SCREW
		2	2, 6		11, 12, 14, 15, 16	EX8			
		2	2, 6		51, 52, 54, 55, 56	EX8			
		2	3, 7		02, 06	EX8			
		2	3, 7		12, 15, 16	EX8			
9	5124 749AA	1	2, 6		01, 02, 06	EX8			DUCT, AIR
		1	2, 6		11, 12, 14, 15, 16	EX8			
		1	2, 6		51, 52, 54, 55, 56	EX8			
		1	3, 7		02, 06	EX8			
		1	3, 7		12, 15, 16	EX8			
10	5189 027AA	1	2, 6		11, 12, 14, 15, 16	EX8			DUCT
		1	2, 6		51, 52, 54, 55, 56	EX8			
		1	3, 7		12, 15, 16	EX8			
11	5124 788AA	1	2, 6		01, 02, 06	EX8		Left	SEAL
		1	2, 6		11, 12, 14, 15, 16	EX8		Left	
		1	2, 6		51, 52, 54, 55, 56	EX8		Left	
		1	3, 7		02, 06	EX8		Left	

Refer to Model Legend Information Bookmark

AR = Use as required - = Non illustrated part # = New this model year

March 3, 2006

Air Ducts And Outlets, Front
Figure 024-630

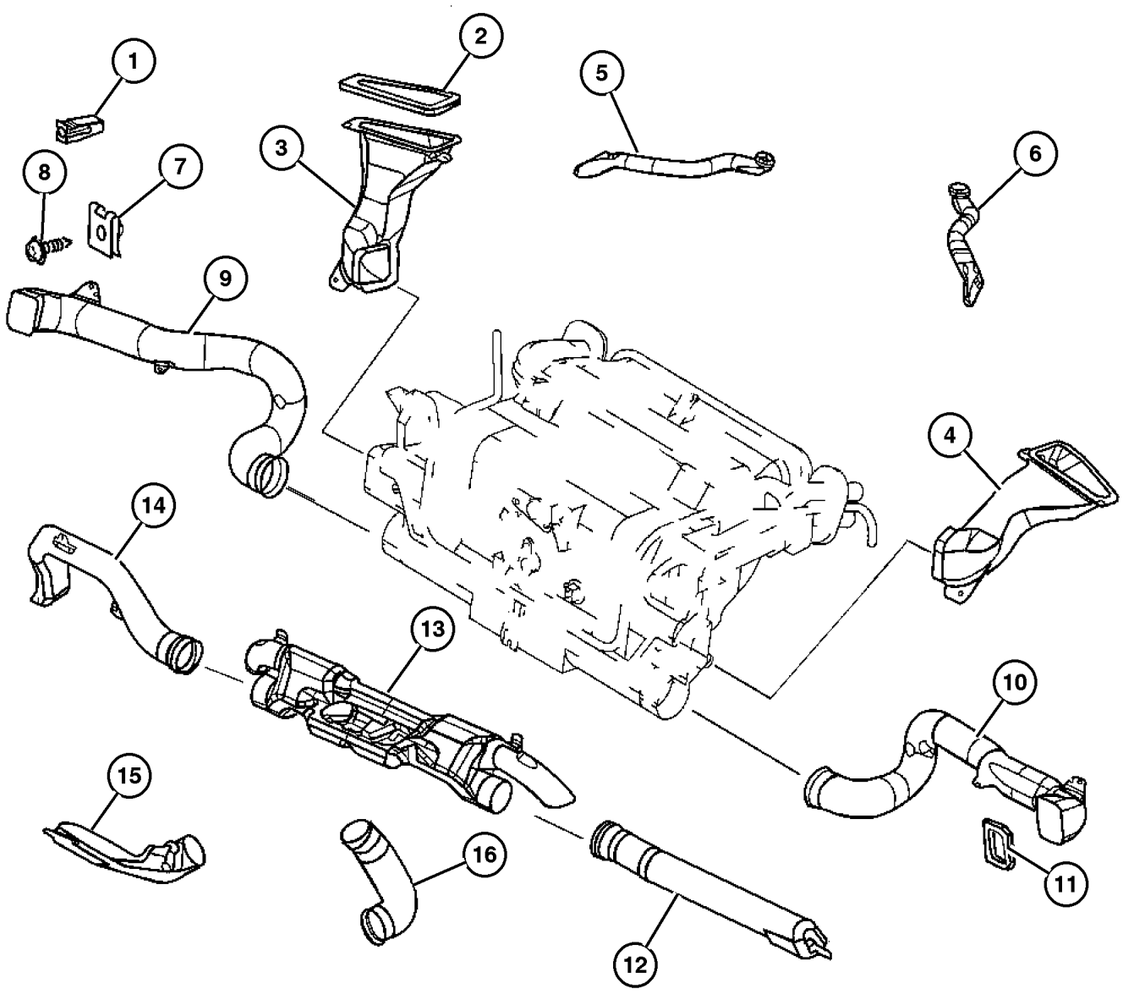

ITEM	PART NUMBER	QTY	LINE	SERIES	BODY	ENGINE	TRANS	TRIM	DESCRIPTION
		1	3, 7		12, 15, 16	EX8			Left
	5124 789AA	1	2, 6		01, 02, 06	EX8			Right
		1	2, 6		11, 12, 14, 15, 16	EX8			Right
		1	2, 6		51, 52, 54, 55, 56	EX8			Right
		1	3, 7		02, 06	EX8			Right
		1	3, 7		12, 15, 16	EX8			Right
12									DUCT
	5124 740AA	1	2, 6		01, 02, 06	EX8			
		1	2, 6		11, 12, 14, 15, 16	EX8			
		1	2, 6		51, 52, 54, 55, 56	EX8			
		1	3, 7		02, 06	EX8			
		1	3, 7		12, 15, 16	EX8			
13									DUCT
	5124 737AA	1	2, 6		01, 02, 06	EX8			
		1	2, 6		11, 12, 14, 15, 16	EX8			
		1	2, 6		51, 52, 54, 55, 56	EX8			
		1	3, 7		02, 06	EX8			
		1	3, 7		12, 15, 16	EX8			
14									DUCT
	5124 739AA	1	2, 6		01, 02, 06	EX8			
		1	2, 6		11, 12, 14, 15, 16	EX8			

Refer to Model Legend Information Bookmark

AR = Use as required - = Non illustrated part # = New this model year

March 3, 2006

Air Ducts And Outlets, Front
Figure 024-630

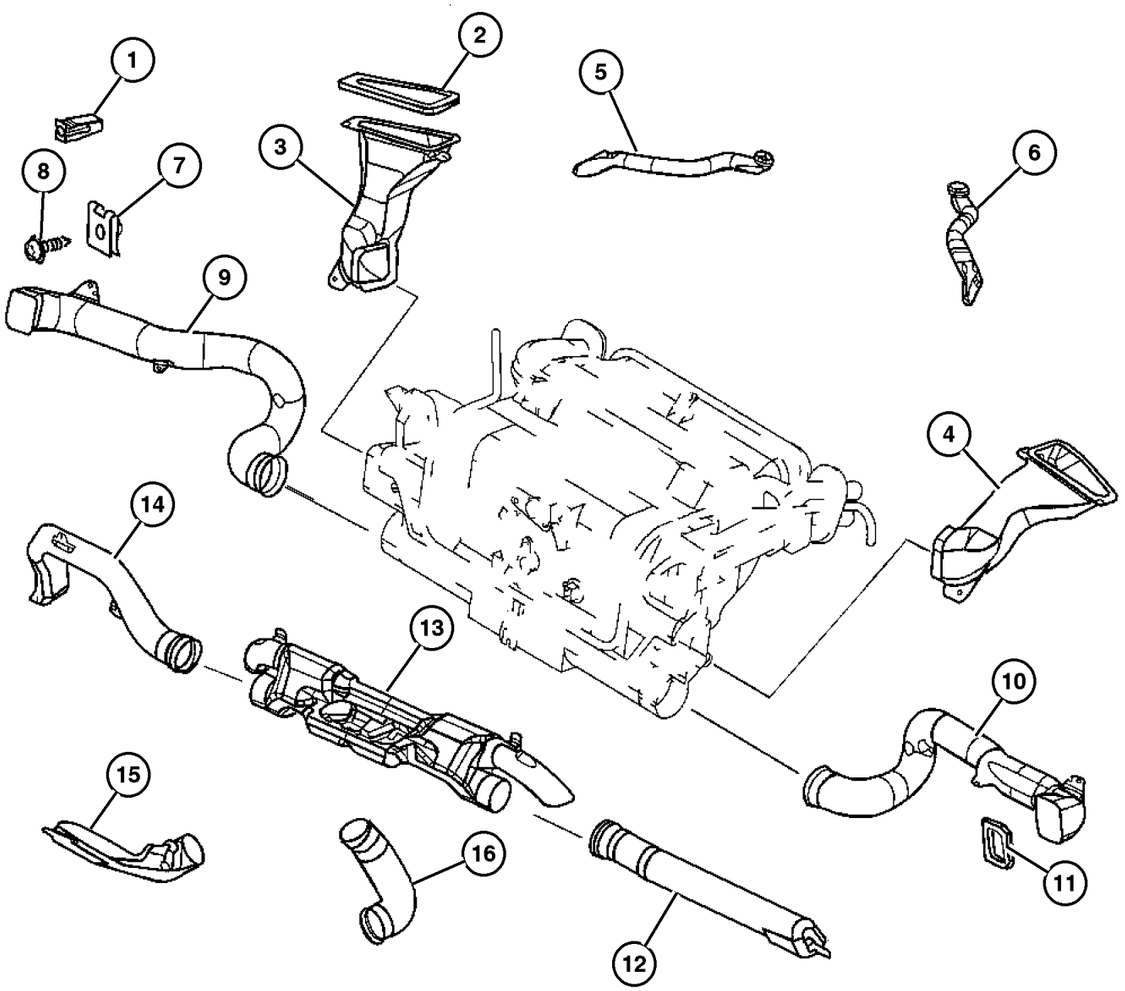

ITEM	PART NUMBER	QTY	LINE	SERIES	BODY	ENGINE	TRANS	TRIM	DESCRIPTION
		1	2, 6		51, 52, 54, 55, 56	EX8			
		1	3, 7		02, 06	EX8			
		1	3, 7		12, 15, 16	EX8			
15	5124 748AA	1	2, 6		01, 02, 06	EX8			DUCT
		1	2, 6		11, 12, 14, 15, 16	EX8			
		1	2, 6		51, 52, 54, 55, 56	EX8			
		1	3, 7		02, 06	EX8			
		1	3, 7		12, 15, 16	EX8			
16	5124 747AA	1	2, 6		01, 02, 06	EX8			DUCT
		1	2, 6		11, 12, 14, 15, 16	EX8			
		1	2, 6		51, 52, 54, 55, 56	EX8			
		1	3, 7		02, 06	EX8			
		1	3, 7		12, 15, 16	EX8			

Refer to Model Legend Information Bookmark

AR = Use as required - = Non illustrated part # = New this model year

March 3, 2006

« RETURN TO GROUP INDEX

Air Ducts And Outlets, Rear
Figure 024-640

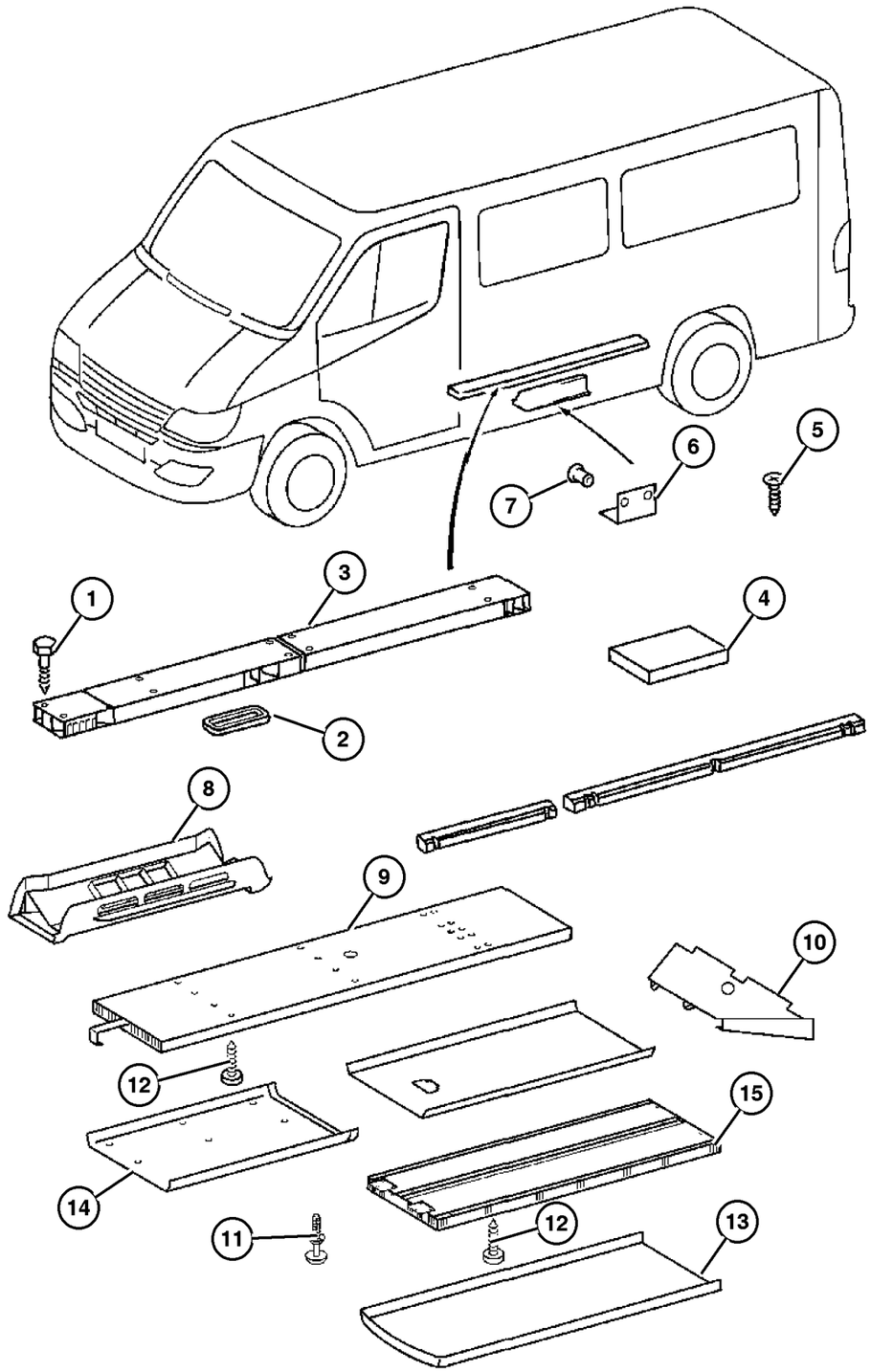

ITEM	PART NUMBER	QTY	LINE	SERIES	BODY	ENGINE	TRANS	TRIM	DESCRIPTION
1									SCREW
	5126 093AA	10	2, 6		12, 15	EX8			
		6	2, 6		11, 14	EX8			
		10	2, 6		52, 55	EX8			
		6	2, 6		51, 54	EX8			
		10	3, 7		12, 15, 16	EX8			
2									SEAL
	5102 646AA	1	2, 6		01, 02, 06	EX8			
	5124 763AA	1	2, 6		11, 12, 14, 15, 16	EX8			
		1	2, 6		51, 52, 54, 55, 56	EX8			
3									HOUSING, Air Duct
	5124 655AA	1	2, 6		12, 15	EX8			Front
		1	2, 6		52, 55	EX8			Front
		1	3, 7		12, 15, 16	EX8			Front
	5124 656AA	1	2, 6		12, 15	EX8			Rear
		1	2, 6		52, 55	EX8			Rear
		1	3, 7		12, 15, 16	EX8			Rear
4									SEAL
	5124 763AA	1	2, 6		11, 12, 14, 15, 16	EX8			
		1	2, 6		51, 52, 54, 55, 56	EX8			
		1	3, 7		12, 15, 16	EX8			
5									SCREW, (NOT SERVICED) (Not Serviced)
6									BRACKET, (NOT SERVICED) (Not Serviced)
7									RIVET, Blind Bulb
	5133 417AA	3	2, 6		01, 02, 06	EX8			
		3	2, 6		11, 12, 14, 15, 16	EX8			

Refer to Model Legend Information Bookmark

Air Ducts And Outlets, Rear
Figure 024-640

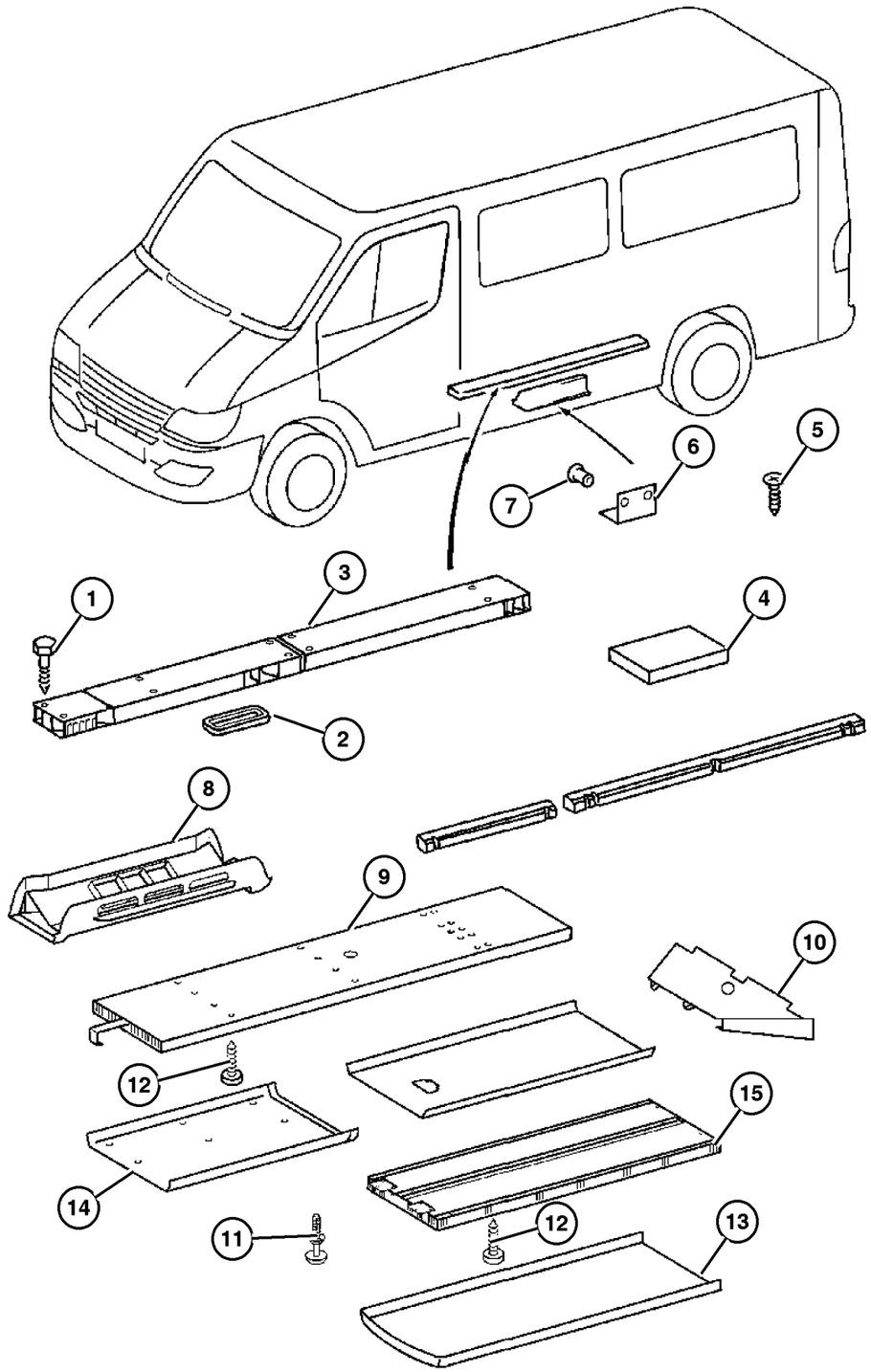

ITEM	PART NUMBER	QTY	LINE	SERIES	BODY	ENGINE	TRANS	TRIM	DESCRIPTION
		3	2, 6		51, 52, 54, 55, 56	EX8			
		3	3, 7		12, 15, 16	EX8			
8									INSULATOR, (NOT SERVICED) (Not Serviced)
9	5132 290AA	1	2, 6		11, 12, 14, 15, 16	EX8			AIR DUCT
		1	2, 6		51, 52, 54, 55, 56	EX8			
10	5132 312AA	1	2, 6		11, 12, 14, 15, 16	EX8			AIR DUCT
		1	2, 6		51, 52, 54, 55, 56	EX8			
		1	3, 7		12, 15, 16	EX8			
11	5104 541AA	2	2, 6		11, 12, 14, 15, 16	EX8			RIVET
		2	2, 6		51, 52, 54, 55, 56	EX8			
		2	3, 7		12, 15	EX8			
12	5133 449AA	20	2, 6		11, 12, 14, 15, 16	EX8			SCREW, Self-Tapping
		20	2, 6		51, 52, 54, 55, 56	EX8			
13	5104 482AA	1	2, 6		11, 12, 14, 15, 16	EX8			HOUSING, Air Duct
		1	2, 6		51, 52, 54, 55, 56	EX8			
14									AIR DUCT

Refer to Model Legend Information Bookmark

AR = Use as required - = Non illustrated part # = New this model year

March 3, 2006

« RETURN TO GROUP INDEX

Air Ducts And Outlets, Rear
Figure 024-640

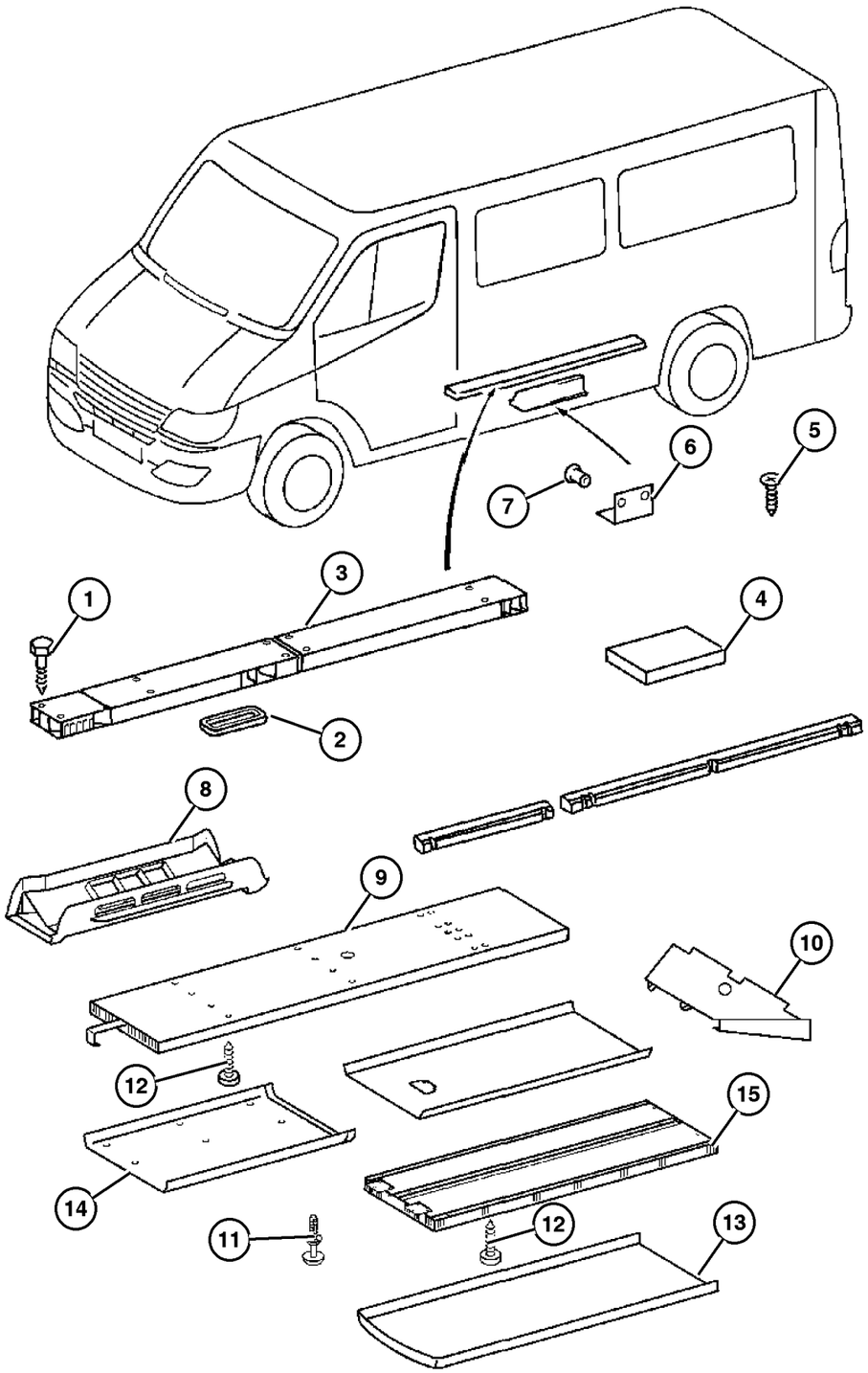

ITEM	PART NUMBER	QTY	LINE	SERIES	BODY	ENGINE	TRANS	TRIM	DESCRIPTION
	5132 291AA	1	2, 6		11, 12, 14, 15, 16	EX8			
		1	2, 6		51, 52, 54, 55, 56	EX8			
15	5132 292AA	1	2, 6		11, 12, 14, 15, 16	EX8			AIR DUCT
		1	2, 6		51, 52, 54, 55, 56	EX8			
-16	5133 453AA-	8	2, 6		14, 15, 16	EX8			SPRING, Filter
		8	2, 6		52, 55	EX8			
		8	3, 7		15, 16	EX8			

Refer to Model Legend Information Bookmark

AR = Use as required - = Non illustrated part # = New this model year

March 3, 2006

« RETURN TO GROUP INDEX

Ventilator, Roof Mounted
Figure 024-650

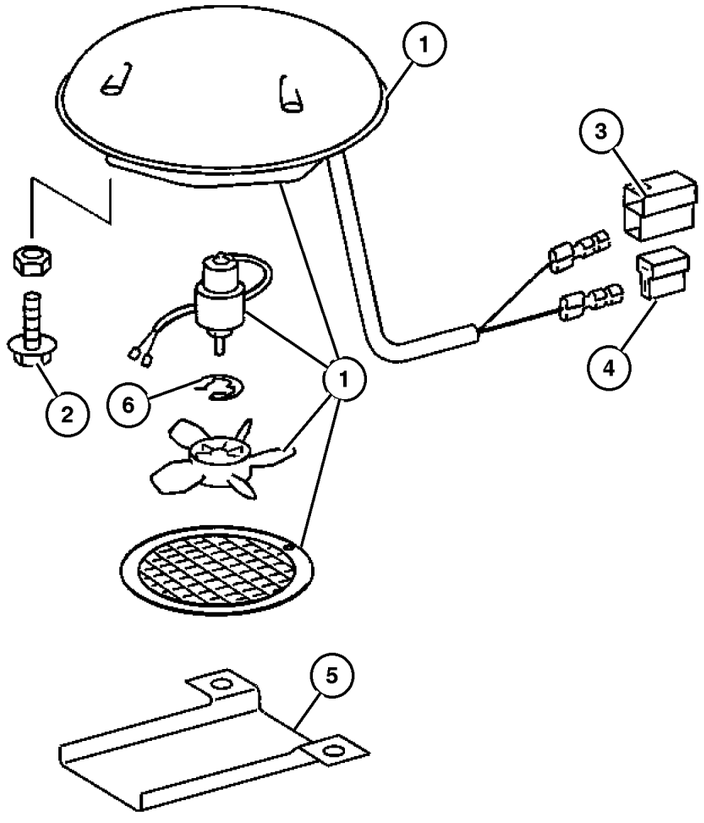

ITEM	PART NUMBER	QTY	LINE	SERIES	BODY	ENGINE	TRANS	TRIM	DESCRIPTION
1									HOUSING, Forced Vent Outlet
	5103 696AA	1	2, 6		11, 12, 14, 15, 16	EX8			
		1	3, 7		12, 15, 16	EX8			
2									BOLT, M6x20
	5126 198AA	9	2, 6		11, 12, 14, 15, 16	EX8			
		9	3, 7		12, 15, 16	EX8			
3									INSULATOR, 2 Way Female
	5103 754AA	1	2, 6		01, 02, 06	EX8			
		1	2, 6		11, 12, 14, 15, 16	EX8			
		1	2, 6		51, 52, 54, 55, 56	EX8			
		1	3, 7		02, 06	EX8			
		1	3, 7		12, 15, 16	EX8			
4									CONNECTOR
	5103 751AA	1	2, 6		11, 12, 14, 15, 16	EX8			
		1	2, 6		51, 52, 54, 55, 56	EX8			
		1	3, 7		12, 15, 16	EX8			
5									COVER, Bracket
	5124 790AA	1	2, 6		11, 12, 14, 15, 16	EX8			
		1	3, 7		12, 15, 16	EX8			
6									CLIP, Fan Shroud
	5133 639AA	1	2, 6		11, 12, 14, 15, 16	EX8			
		1	3, 7		12, 15, 16	EX8			
-7									GRILLE, Vent

Refer to Model Legend Information Bookmark

AR = Use as required - = Non illustrated part # = New this model year

March 3, 2006

« RETURN TO GROUP INDEX

»

Ventilator, Roof Mounted
Figure 024-650

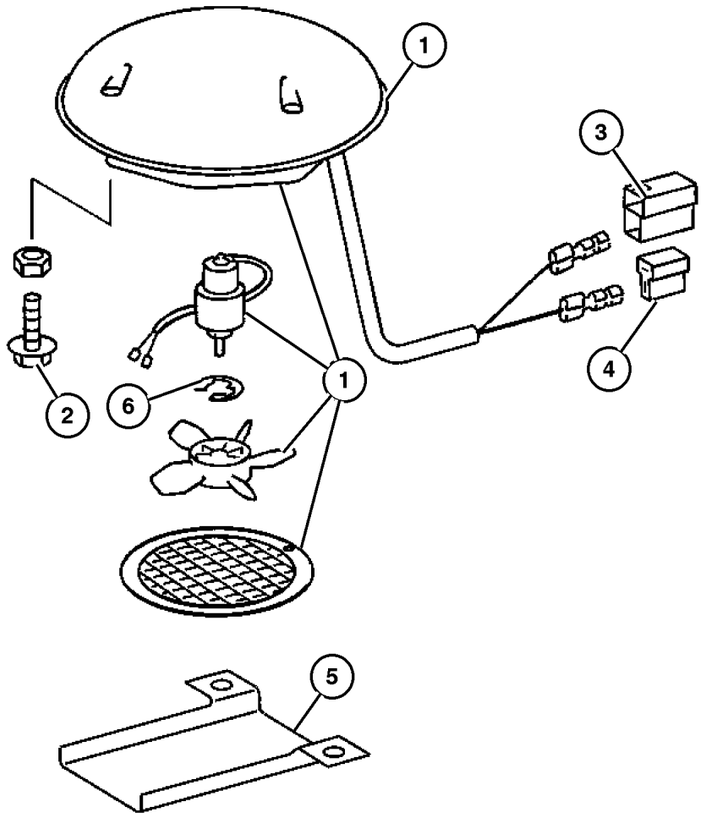

ITEM	PART NUMBER	QTY	LINE	SERIES	BODY	ENGINE	TRANS	TRIM	DESCRIPTION
	5133 638AA-	1	2, 6		11, 12, 14, 15, 16	EX8			
		1	3, 7		12, 15, 16	EX8			

Refer to Model Legend Information Bookmark

AR = Use as required - = Non illustrated part # = New this model year

March 3, 2006

« RETURN TO GROUP INDEX

«

Group – DVA

Doors and Related Parts

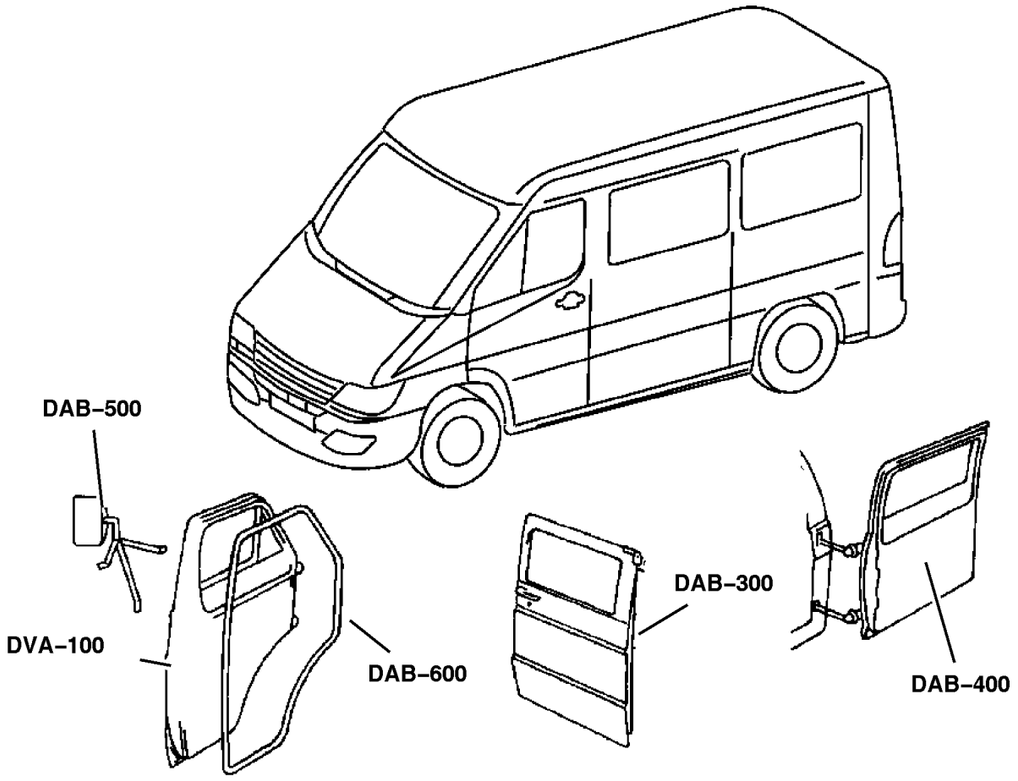

DVA–100 Front Door	DVA–300 Door, Sliding Cargo	DVA–400 Door, Dual and Single Cargo	DVA–500 Exterior Mirror
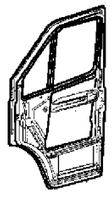		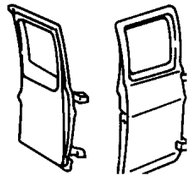	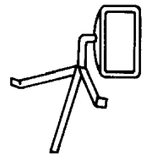

GROUP DVA - Doors and Related Parts

Illustration Title	Group-Fig. No.
Front Door	
Door, Front Shell and Hinges	Fig. DVA-110
Door, Front Glass and Regulator Handle	Fig. DVA-120
Door, Front Exterior Handle and Links	Fig. DVA-130
Door, Sliding Cargo	
Door,Sliding Cargo Shell and Hinges	Fig. DVA-310
Door, Sliding Cargo Glass	Fig. DVA-320
Door, Sliding Cargo Lock and Controls	Fig. DVA-330
Door, Dual and Single Cargo	
Door, Cargo Shell and Hinges	Fig. DVA-410
Door, Cargo Glass and Hardware	Fig. DVA-420
Door, Cargo Lock and Control	Fig. DVA-430
Exterior Mirror	
Mirrors, Exterior	Fig. DVA-520

Door, Front Shell and Hinges
Figure DVA-110

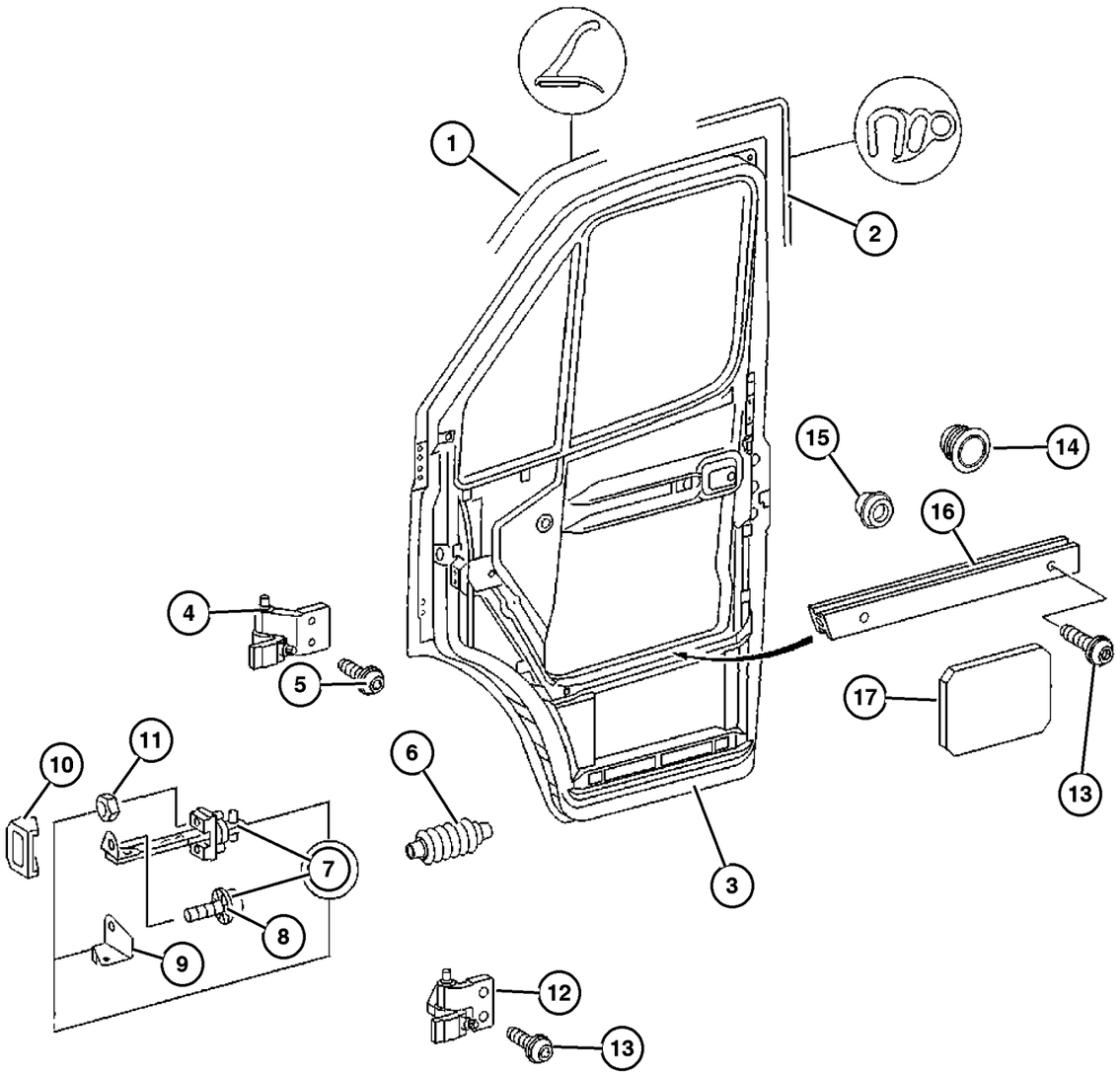

ITEM	PART NUMBER	QTY	LINE	SERIES	BODY	ENGINE	TRANS	TRIM	DESCRIPTION
1									SEAL, Door
	5133 518AA	1	2, 6	L	01, 02, 06				
		1	2, 6	L	11, 12, 14, 15, 16				
		1	2, 6	L	51, 52, 54, 55, 56				
		1	3, 7	L	02, 06				
		1	3, 7	L	12, 15, 16				
2									SEAL, Door
	5104 426AA	1	2, 6	L	11, 12, 14, 15, 16				[GKA]
		1	2, 6	L	51, 52, 54, 55, 56				[GKA]
		1	3, 7	L	16				[5AF+GKA]
3									PANEL, Front Door, Shell
	5135 988AA	1	2, 6	L	01, 02, 06				Right
		1	2, 6	L	11, 12, 14, 15, 16				Right
		1	2, 6	L	51, 52, 54, 55, 56				Right
		1	3, 7	L	02, 06				Right
		1	3, 7	L	12, 15, 16				Right
	5135 991AA	1	2, 6	L	01, 02, 06				Left
		1	2, 6	L	11, 12, 14, 15, 16				Left
		1	2, 6	L	51, 52, 54, 55, 56				Left
		1	3, 7	L	02, 06				Left
		1	3, 7	L	12, 15, 16				Left
4									HINGE, Door, Upper

Refer to Model Legend Information Bookmark

Door, Front Shell and Hinges
Figure DVA-110

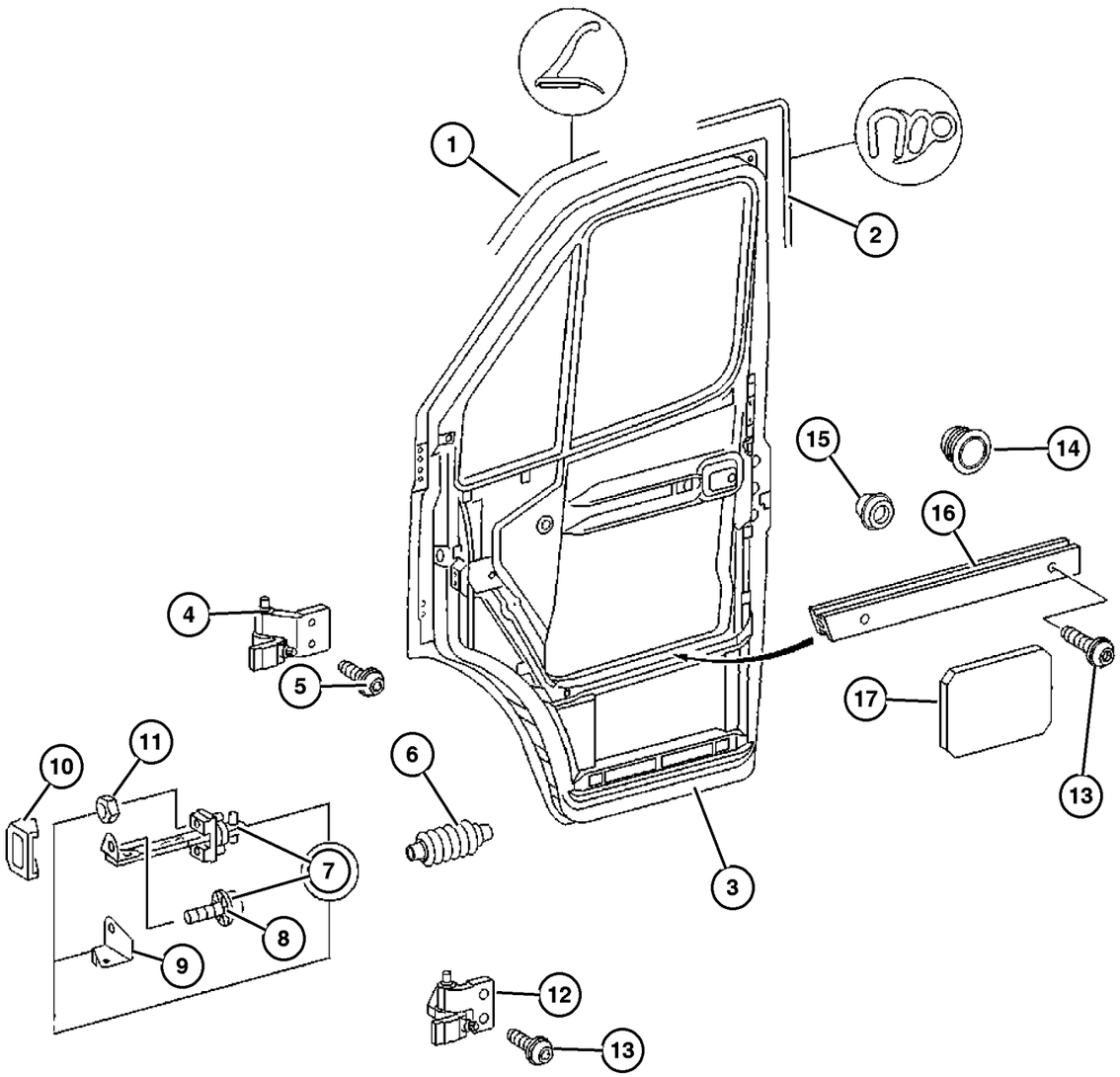

ITEM	PART NUMBER	QTY	LINE	SERIES	BODY	ENGINE	TRANS	TRIM	DESCRIPTION
	5104 321AA	1	2, 6	L	01, 02, 06				Left
		1	2, 6	L	11, 12, 14, 15, 16				Left
		1	2, 6	L	51, 52, 54, 55, 56				Left
		1	3, 7	L	02, 06				Left
		1	3, 7	L	12, 15, 16				Left
	5104 324AA	1	2, 6	L	01, 02, 06				Right
		1	2, 6	L	11, 12, 14, 15, 16				Right
		1	2, 6	L	51, 52, 54, 55, 56				Right
		1	3, 7	L	02, 06				Right
		1	3, 7	L	12, 15, 16				Right
5	5103 780AA	2	2, 6	L	01, 02, 06				SCREW
		2	2, 6	L	11, 12, 14, 15, 16				
		2	2, 6	L	51, 52, 54, 55, 56				
		2	3, 7	L	02, 06				
		2	3, 7	L	12, 15, 16				
6	5125 915AA	2	2, 6	L	01, 02, 06				GROMMET, Door Wiring
		2	2, 6	L	11, 12, 14, 15, 16				
		2	2, 6	L	51, 52, 54, 55, 56				
		2	3, 7	L	02, 06				

Refer to Model Legend Information Bookmark

AR = Use as required - = Non illustrated part # = New this model year

March 3, 2006

« RETURN TO GROUP INDEX

Door, Front Shell and Hinges
Figure DVA-110

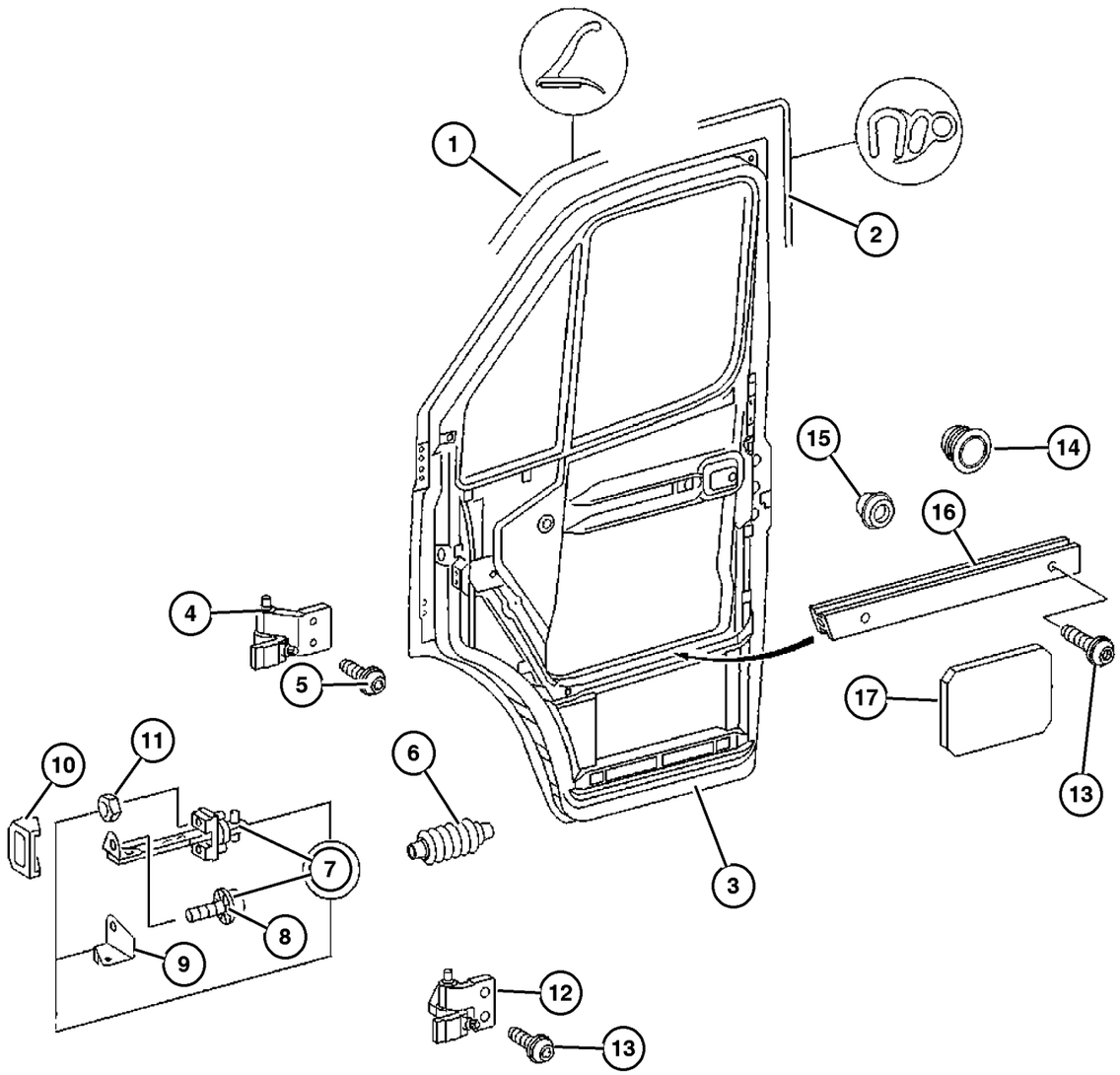

ITEM	PART NUMBER	QTY	LINE	SERIES	BODY	ENGINE	TRANS	TRIM	DESCRIPTION
		2	3, 7	L	12, 15, 16				
7									CHECK, Front Door
	5104 338AA	1	2, 6	L	01, 02, 06				Right
		1	2, 6	L	11, 12, 14, 15, 16				Right
		1	2, 6	L	51, 52, 54, 55, 56				Right
		1	3, 7	L	02, 06				Right
		1	3, 7	L	12, 15, 16				Right
	5104 335AA	1	2, 6	L	01, 02, 06				Left
		1	2, 6	L	11, 12, 14, 15, 16				Left
		1	2, 6	L	51, 52, 54, 55, 56				Left
		1	3, 7	L	02, 06				Left
		1	3, 7	L	12, 15, 16				Left
8									SCREW
	5103 788AA	2	2, 6	L	01, 02, 06				
		2	2, 6	L	11, 12, 14, 15, 16				
		2	2, 6	L	51, 52, 54, 55, 56				
		2	3, 7	L	02, 06				
		2	3, 7	L	12, 15, 16				
9									BRACKET, Check Arm
	5103 667AA	1	2, 6	L	01, 02, 06				
		1	2, 6	L	11, 12, 14, 15, 16				

Refer to Model Legend Information Bookmark

Door, Front Shell and Hinges
Figure DVA-110

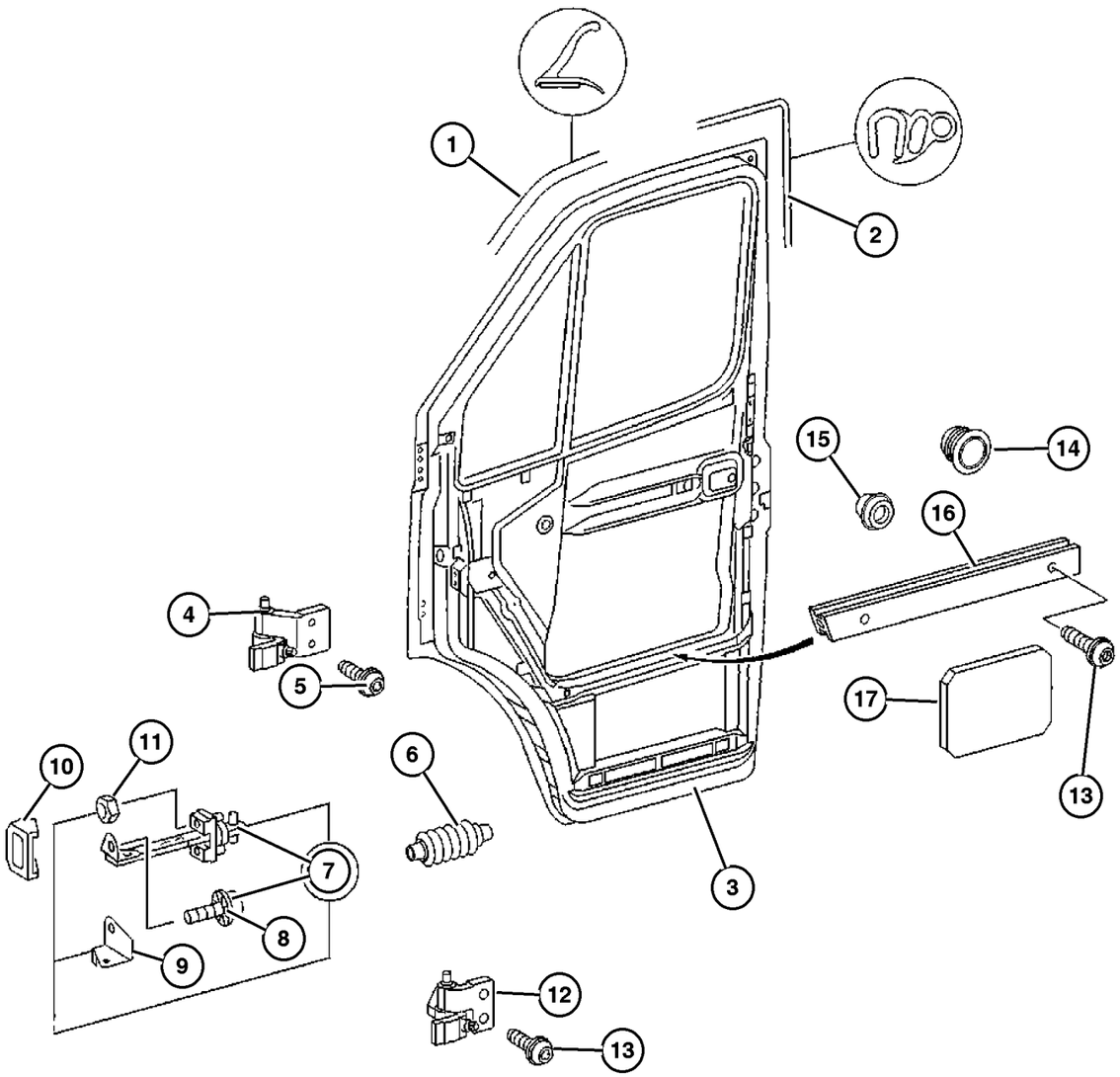

ITEM	PART NUMBER	QTY	LINE	SERIES	BODY	ENGINE	TRANS	TRIM	DESCRIPTION
		1	2, 6	L	51, 52, 54, 55, 56				
		1	3, 7	L	02, 06				
		1	3, 7	L	12, 15, 16				
10	5123 750AA	1	2, 6	L	01, 02, 06				SEAL, Front Door
		1	2, 6	L	11, 12, 14, 15, 16				
		1	2, 6	L	51, 52, 54, 55, 56				
		1	3, 7	L	02, 06				
		1	3, 7	L	12, 15, 16				
11	6104 708AA	4	2, 6	L	11, 12, 14, 15, 16				NUT, Hex, M6 [GKE]
		4	2, 6	L	51, 52, 54, 55, 56				[GKE]
		1	2, 6	L	01, 02, 06				
		4	3, 7	L	12, 15, 16				[GKE]
		2	3, 7	L	02, 06				
12	5127 220AA	1	2, 6	L	01, 02, 06				HINGE, Door, Lower Right
		1	2, 6	L	11, 12, 14, 15, 16				Right
		1	2, 6	L	51, 52, 54, 55, 56				Right
		1	3, 7	L	02, 06				Right
		1	3, 7	L	12, 15, 16				Right
	5127 221AA	1	2, 6	L	01, 02, 06				Left

Refer to Model Legend Information Bookmark

AR = Use as required - = Non illustrated part # = New this model year

March 3, 2006

Door, Front Shell and Hinges
Figure DVA-110

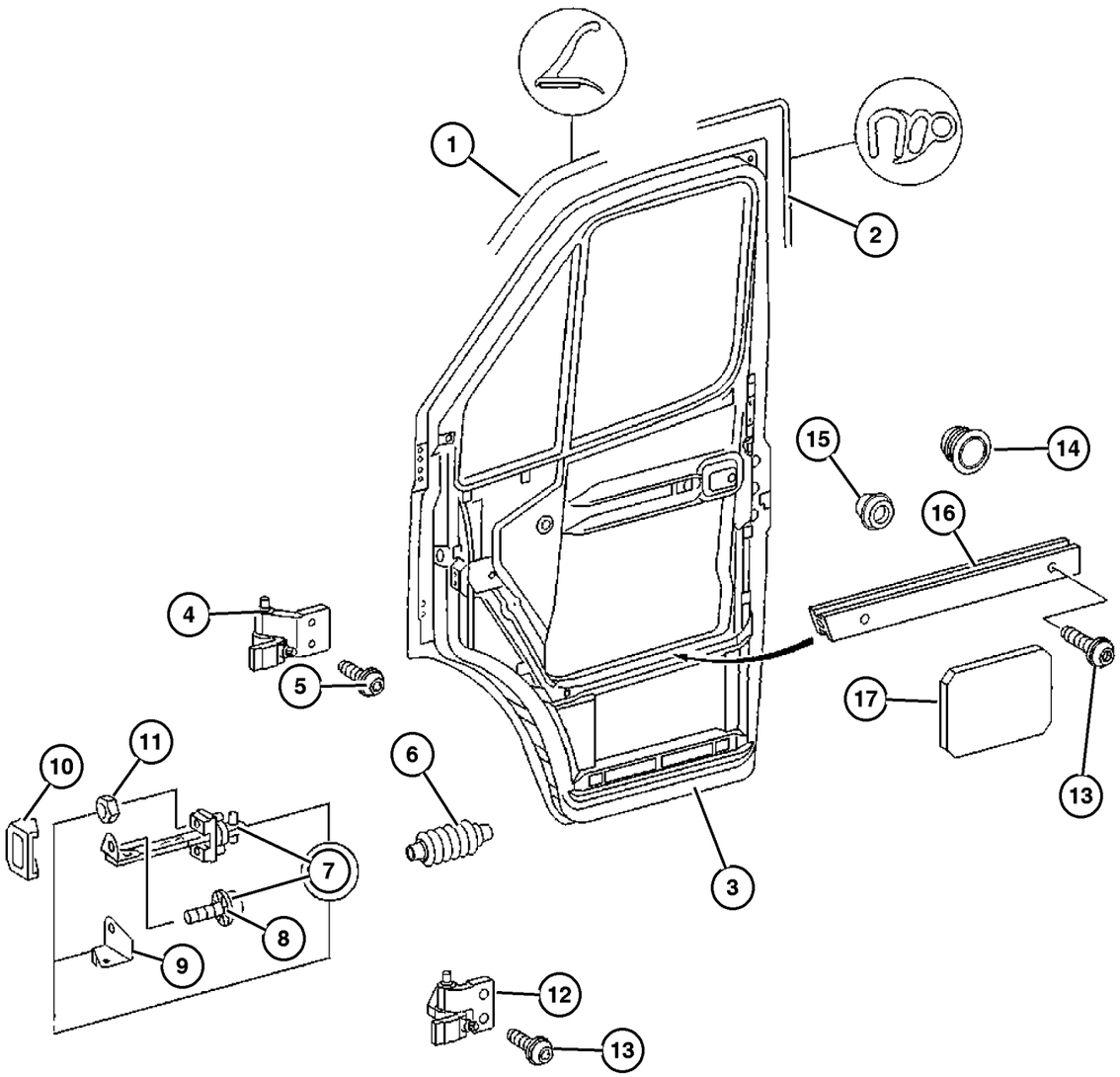

ITEM	PART NUMBER	QTY	LINE	SERIES	BODY	ENGINE	TRANS	TRIM	DESCRIPTION
		1	2, 6	L	11, 12, 14, 15, 16				Left
		1	2, 6	L	51, 52, 54, 55, 56				Left
		1	3, 7	L	02, 06				Left
		1	3, 7	L	12, 15, 16				Left
13	5103 781AA	2	2, 6	L	01, 02, 06				SCREW
		2	2, 6	L	11, 12, 14, 15, 16				
		2	2, 6	L	51, 52, 54, 55, 56				
		2	3, 7	L	02, 06				
		2	3, 7	L	12, 15, 16				
14	5125 508AA	1	2, 6	L	11, 12, 14, 15, 16				PLUG, Door [GKE]
		1	2, 6	L	51, 52, 54, 55, 56				[GKE]
		1	3, 7	L	12, 15, 16				[GKE]
15	5133 514AA	1	2, 6	L	01, 02, 06				PLUG, Expansion
		1	2, 6	L	11, 12, 14, 15, 16				
		1	2, 6	L	51, 52, 54, 55, 56				
		1	3, 7	L	02, 06				
		1	3, 7	L	12, 15, 16				
16									REINFORCEMENT, Door Inner

Refer to Model Legend Information Bookmark

AR = Use as required - = Non illustrated part # = New this model year

March 3, 2006

« RETURN TO GROUP INDEX

Door, Front Shell and Hinges
Figure DVA-110

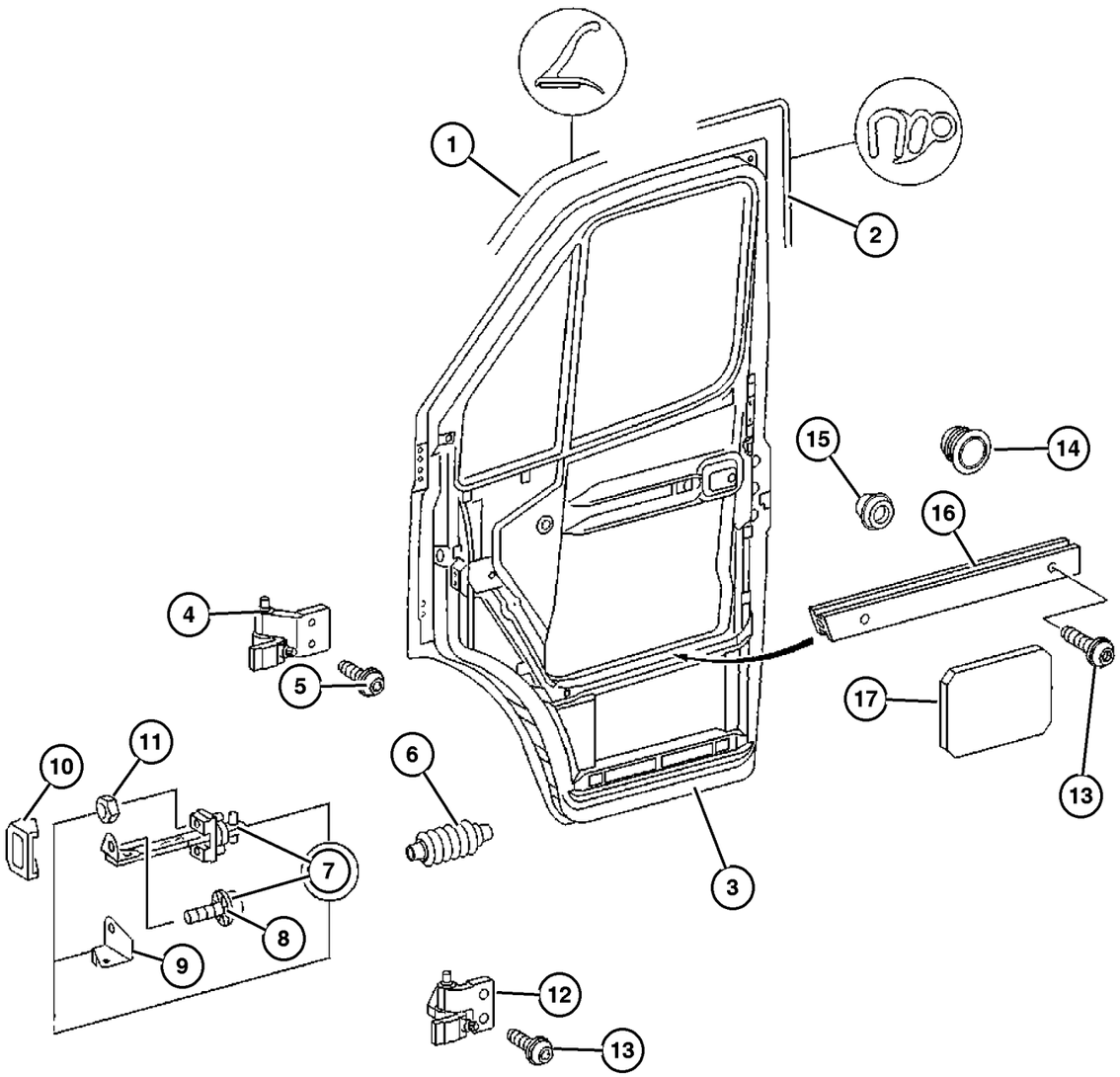

ITEM	PART NUMBER	QTY	LINE	SERIES	BODY	ENGINE	TRANS	TRIM	DESCRIPTION
	5123 683AA	1	2, 6	L	11, 12, 14, 15, 16				Left
		1	2, 6	L	51, 52, 54, 55, 56				Left
		1	3, 7	L	12, 15, 16				Left
	5123 684AA	1	2, 6	L	11, 12, 14, 15, 16				Right
		1	2, 6	L	51, 52, 54, 55, 56				Right
		1	3, 7	L	12, 15, 16				Right
17									SHIELD, Door
	5122 515AA	2	2, 6	L	01, 02, 06				[HGM]
		2	2, 6	L	11, 12, 14, 15, 16				[HGM]
		2	2, 6	L	51, 52, 54, 55, 56				[HGM]
		2	3, 7	L	02, 06				[HGM]
		2	3, 7	L	12, 15, 16				[HGM]

Refer to Model Legend Information Bookmark

AR = Use as required - = Non illustrated part # = New this model year

March 3, 2006

« RETURN TO GROUP INDEX

Door, Front Glass and Regulator Handle
Figure DVA-120

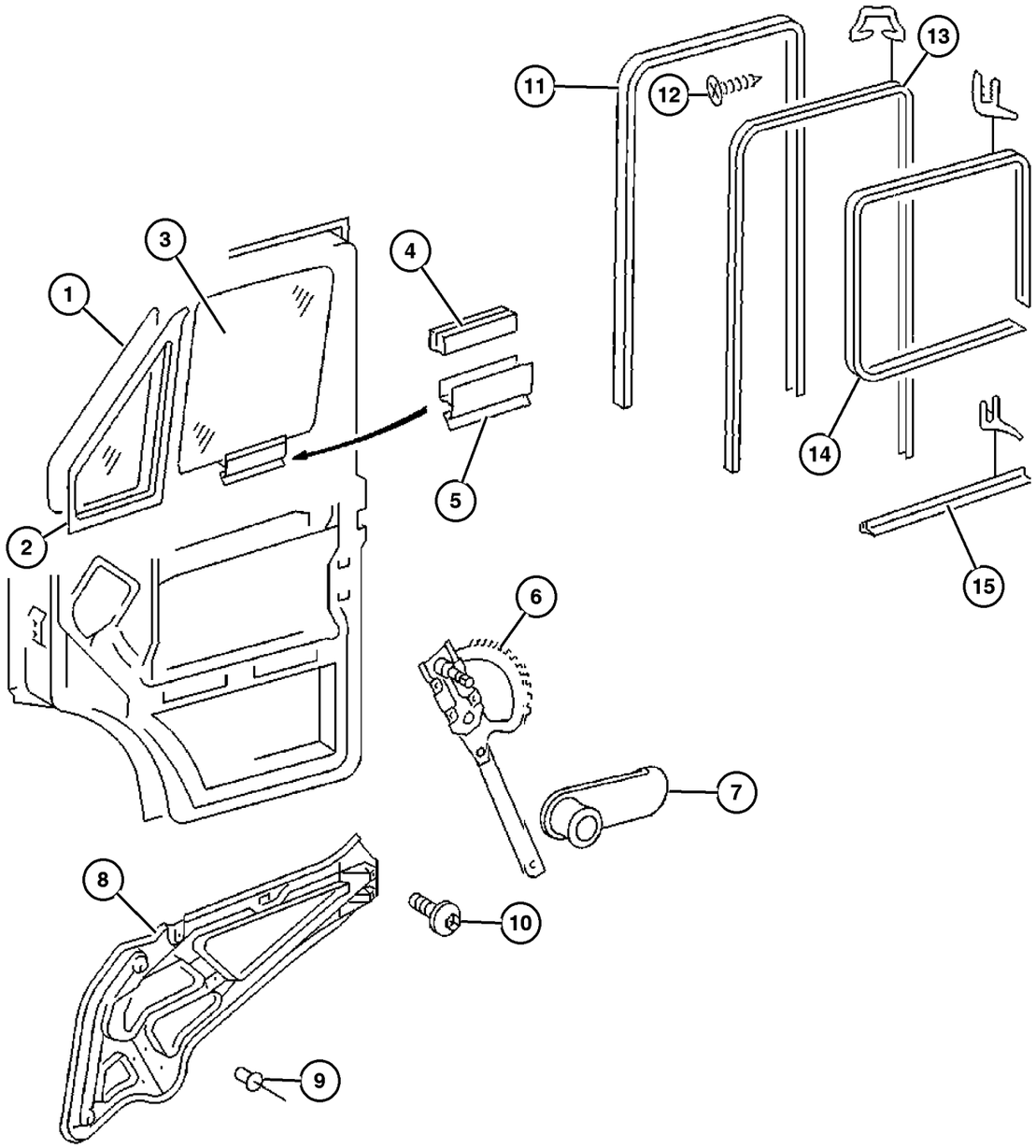

ITEM	PART NUMBER	QTY	LINE	SERIES	BODY	ENGINE	TRANS	TRIM	DESCRIPTION
1									GLASS, Front Door Vent
	5104 352AA	1	2, 6	L	01, 02, 06				Left
		1	2, 6	L	11, 12, 14, 15, 16				Left
		1	2, 6	L	51, 52, 54, 55, 56				Left
		1	3, 7	L	02, 06				Left
		1	3, 7	L	12, 15, 16				Left
	5104 353AA	1	2, 6	L	01, 02, 06				Right
		1	2, 6	L	11, 12, 14, 15, 16				Right
		1	2, 6	L	51, 52, 54, 55, 56				Right
		1	3, 7	L	02, 06				Right
		1	3, 7	L	12, 15, 16				Right
2									WEATHERSTRIP
	5104 348AA	1	2, 6	L	01, 02, 06				Left
		1	2, 6	L	11, 12, 14, 15, 16				Left
		1	2, 6	L	51, 52, 54, 55, 56				Left
		1	3, 7	L	02, 06				Left
		1	3, 7	L	12, 15, 16				Left
	5104 350AA	1	2, 6	L	01, 02, 06				Right
		1	2, 6	L	11, 12, 14, 15, 16				Right
		1	2, 6	L	51, 52, 54, 55, 56				Right
		1	3, 7	L	02, 06				Right

Refer to Model Legend Information Bookmark

Door, Front Glass and Regulator Handle
Figure DVA-120

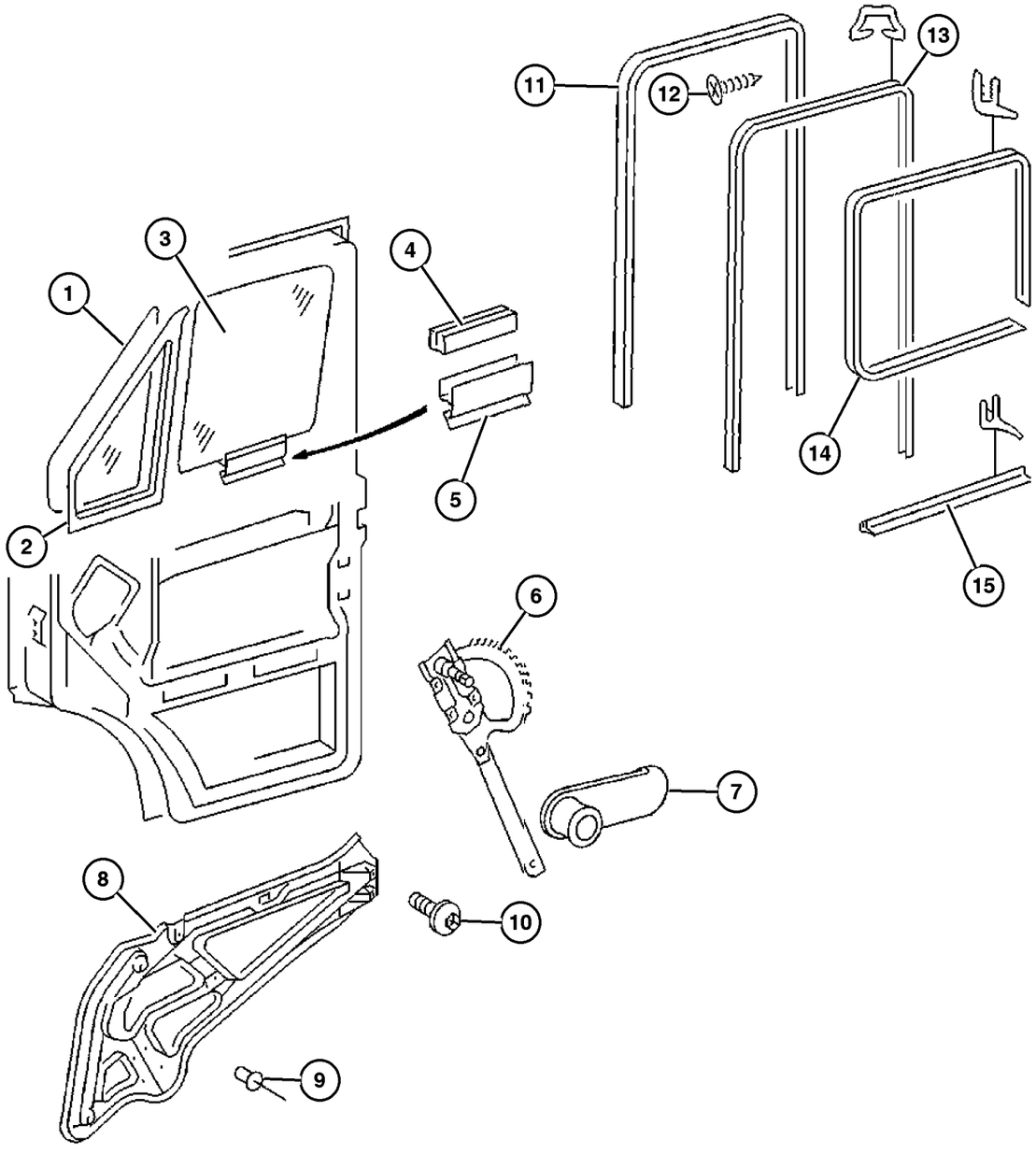

ITEM	PART NUMBER	QTY	LINE	SERIES	BODY	ENGINE	TRANS	TRIM	DESCRIPTION
		1	3, 7	L	12, 15, 16				Right
3	5104 334AA	1	2, 6	L	01, 02, 06				GLASS, Front Door Left
		1	2, 6	L	11, 12, 14, 15, 16				Left
		1	2, 6	L	51, 52, 54, 55, 56				Left
		1	3, 7	L	02, 06				Left
		1	3, 7	L	12, 15, 16				Left
	5104 336AA	1	2, 6	L	01, 02, 06				Right
		1	2, 6	L	11, 12, 14, 15, 16				Right
		1	2, 6	L	51, 52, 54, 55, 56				Right
		1	3, 7	L	02, 06				Right
		1	3, 7	L	12, 15, 16				Right
4	5103 783AA	1	2, 6	L	01, 02, 06				WEATHERSTRIP, Glass Channel Run
		1	2, 6	L	11, 12, 14, 15, 16				
		1	2, 6	L	51, 52, 54, 55, 56				
		1	3, 7	L	02, 06				
		1	3, 7	L	12, 15, 16				
5	5104 029AA	1	2, 6	L	01, 02, 06				CHANNEL, Glass Run Lower
		1	2, 6	L	11, 12, 14, 15, 16				

Refer to Model Legend Information Bookmark

Door, Front Glass and Regulator Handle
Figure DVA-120

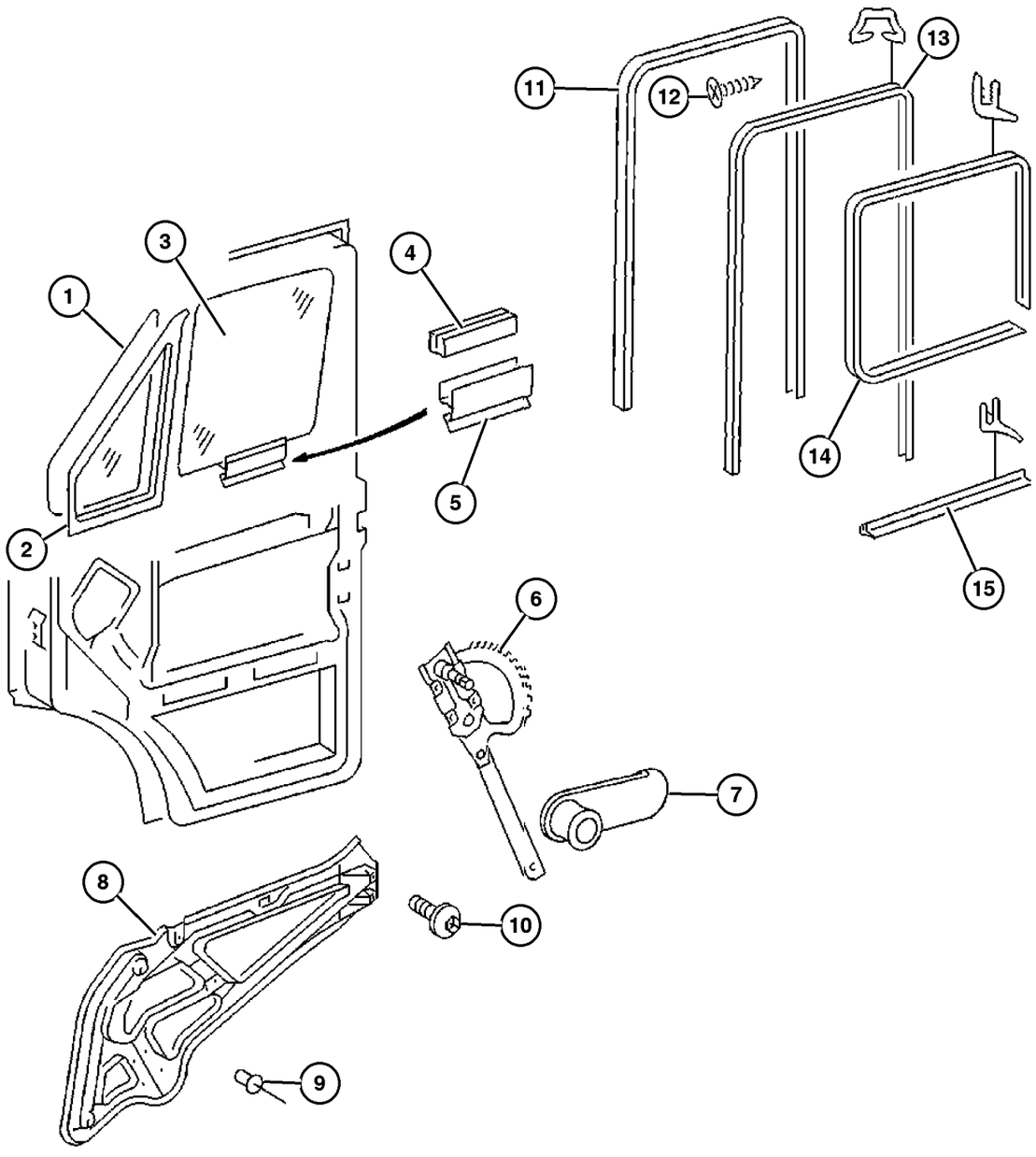

ITEM	PART NUMBER	QTY	LINE	SERIES	BODY	ENGINE	TRANS	TRIM	DESCRIPTION
		1	2, 6	L	51, 52, 54, 55, 56				
		1	3, 7	L	02, 06				
		1	3, 7	L	12, 15, 16				
6	5104 343AA	1	2, 6	L	01, 02, 06				REGULATOR, Front Door Window Left
		1	2, 6	L	11, 12, 14, 15, 16				Left
		1	2, 6	L	51, 52, 54, 55, 56				Left
		1	3, 7	L	02, 06				Left
		1	3, 7	L	12, 15, 16				Left
	5104 345AA	1	2, 6	L	01, 02, 06				[JPA], Left
		1	2, 6	L	11, 12, 14, 15, 16				[JPA], Left
		1	2, 6	L	51, 52, 54, 55, 56				[JPA], Left
		1	3, 7	L	02, 06				[JPA], Left
		1	3, 7	L	12, 15, 16				[JPA], Left
	5104 346AA	1	2, 6	L	01, 02, 06				[JPA], Right
		1	2, 6	L	11, 12, 14, 15, 16				[JPA], Right
		1	2, 6	L	51, 52, 54, 55, 56				[JPA], Right
		1	3, 7	L	02, 06				[JPA], Right
		1	3, 7	L	12, 15, 16				[JPA], Right
	5123 727AA	1	2, 6	L	01, 02, 06				Right
		1	2, 6	L	11, 12, 14, 15, 16				Right

Refer to Model Legend Information Bookmark

AR = Use as required - = Non illustrated part # = New this model year

March 3, 2006

« RETURN TO GROUP INDEX

Door, Front Glass and Regulator Handle
Figure DVA-120

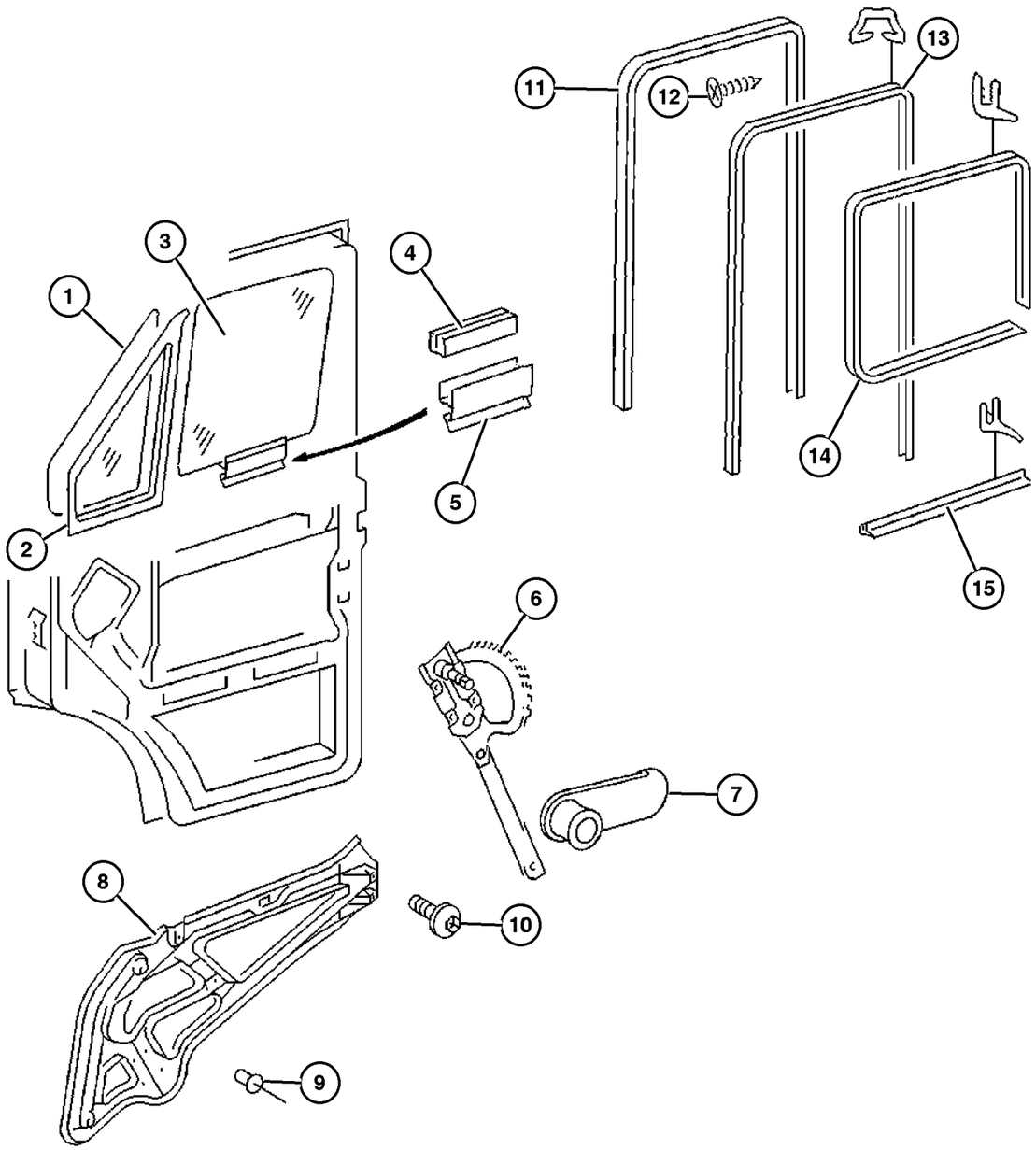

ITEM	PART NUMBER	QTY	LINE	SERIES	BODY	ENGINE	TRANS	TRIM	DESCRIPTION
		1	2, 6	L	51, 52, 54, 55, 56				Right
		1	3, 7	L	02, 06				Right
		1	3, 7	L	12, 15, 16				Right
7	1AR23 CSSAA	1	2, 6	L	01, 02, 06				HANDLE, Window Regulator
		1	2, 6	L	11, 12, 14, 15, 16				
		1	2, 6	L	51, 52, 54, 55, 56				
		1	3, 7	L	02, 06				
		1	3, 7	L	12, 15, 16				
8	5123 685AA	1	2, 6	L	01, 02, 06				BRACKET, Door Inside Left
		1	2, 6	L	11, 12, 14, 15, 16				Left
		1	2, 6	L	51, 52, 54, 55, 56				Left
		1	3, 7	L	02, 06				Left
		1	3, 7	L	12, 15, 16				Left
	5123 686AA	1	2, 6	L	01, 02, 06				Right
		1	2, 6	L	11, 12, 14, 15, 16				Right
		1	2, 6	L	51, 52, 54, 55, 56				Right
		1	3, 7	L	02, 06				Right
		1	3, 7	L	12, 15, 16				Right
9	5103 838AA	4	2, 6	L	01, 02, 06				RIVET

Refer to Model Legend Information Bookmark

AR = Use as required - = Non illustrated part # = New this model year

March 3, 2006

« RETURN TO GROUP INDEX

Door, Front Glass and Regulator Handle
Figure DVA-120

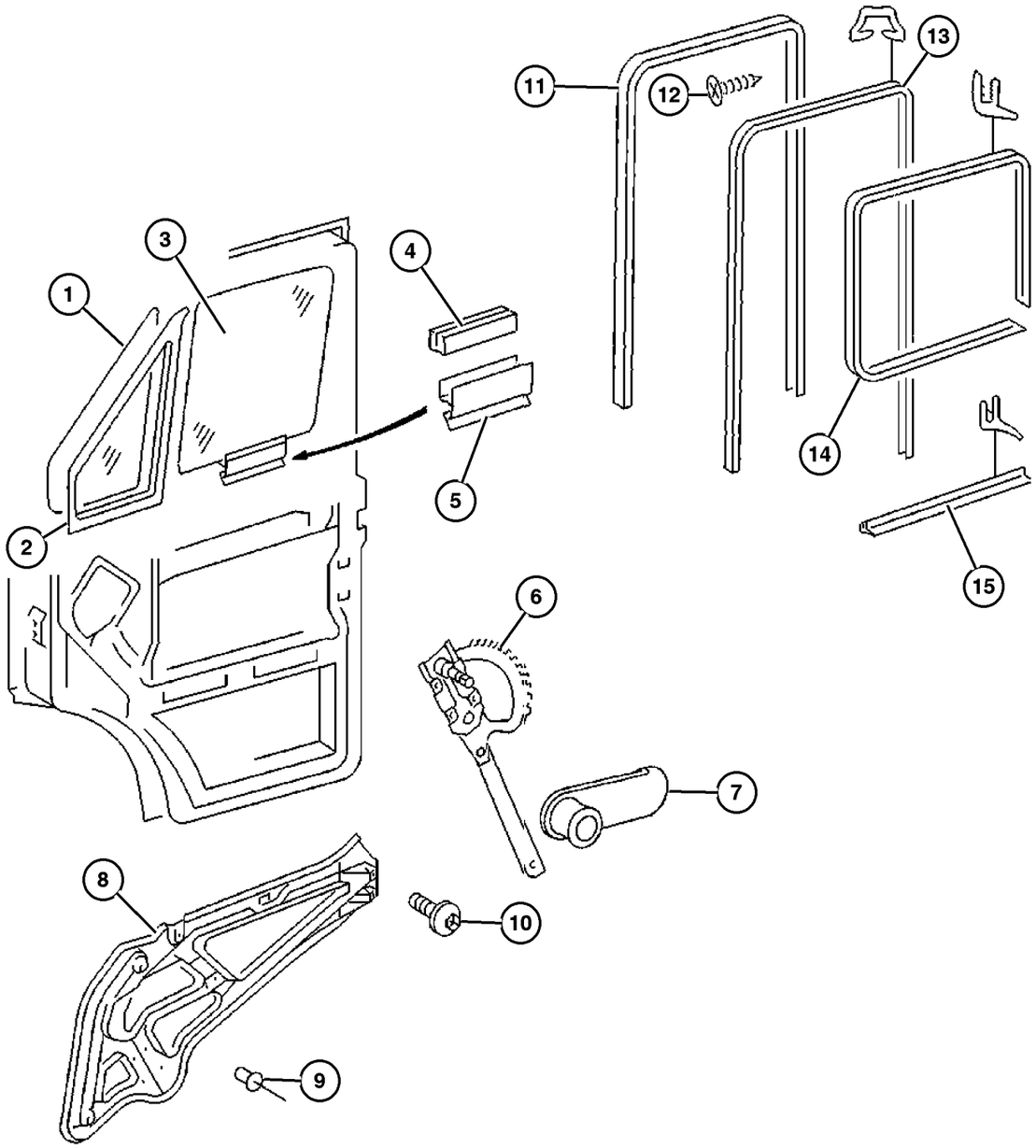

ITEM	PART NUMBER	QTY	LINE	SERIES	BODY	ENGINE	TRANS	TRIM	DESCRIPTION
		4	2, 6	L	11, 12, 14, 15, 16				
		4	2, 6	L	51, 52, 54, 55, 56				
		4	3, 7	L	02, 06				
		4	3, 7	L	12, 15, 16				
10									SCREW
	5125 421AA	4	2, 6	L	01, 02, 06				
		4	2, 6	L	11, 12, 14, 15, 16				
		4	2, 6	L	51, 52, 54, 55, 56				
		4	3, 7	L	02, 06				
		4	3, 7	L	12, 15, 16				
11									FRAME, Door Glass
	5104 351AA	1	2, 6	L	01, 02, 06				Right
		1	2, 6	L	11, 12, 14, 15, 16				Right
		1	2, 6	L	51, 52, 54, 55, 56				Right
		1	3, 7	L	02, 06				Right
		1	3, 7	L	12, 15, 16				Right
	5123 785AA	1	2, 6	L	01, 02, 06				Left
		1	2, 6	L	11, 12, 14, 15, 16				Left
		1	2, 6	L	51, 52, 54, 55, 56				Left
		1	3, 7	L	02, 06				Left
		1	3, 7	L	12, 15, 16				Left
12									SCREW, Tapping

Refer to Model Legend Information Bookmark

AR = Use as required - = Non illustrated part # = New this model year

March 3, 2006

« RETURN TO GROUP INDEX

Door, Front Glass and Regulator Handle
Figure DVA-120

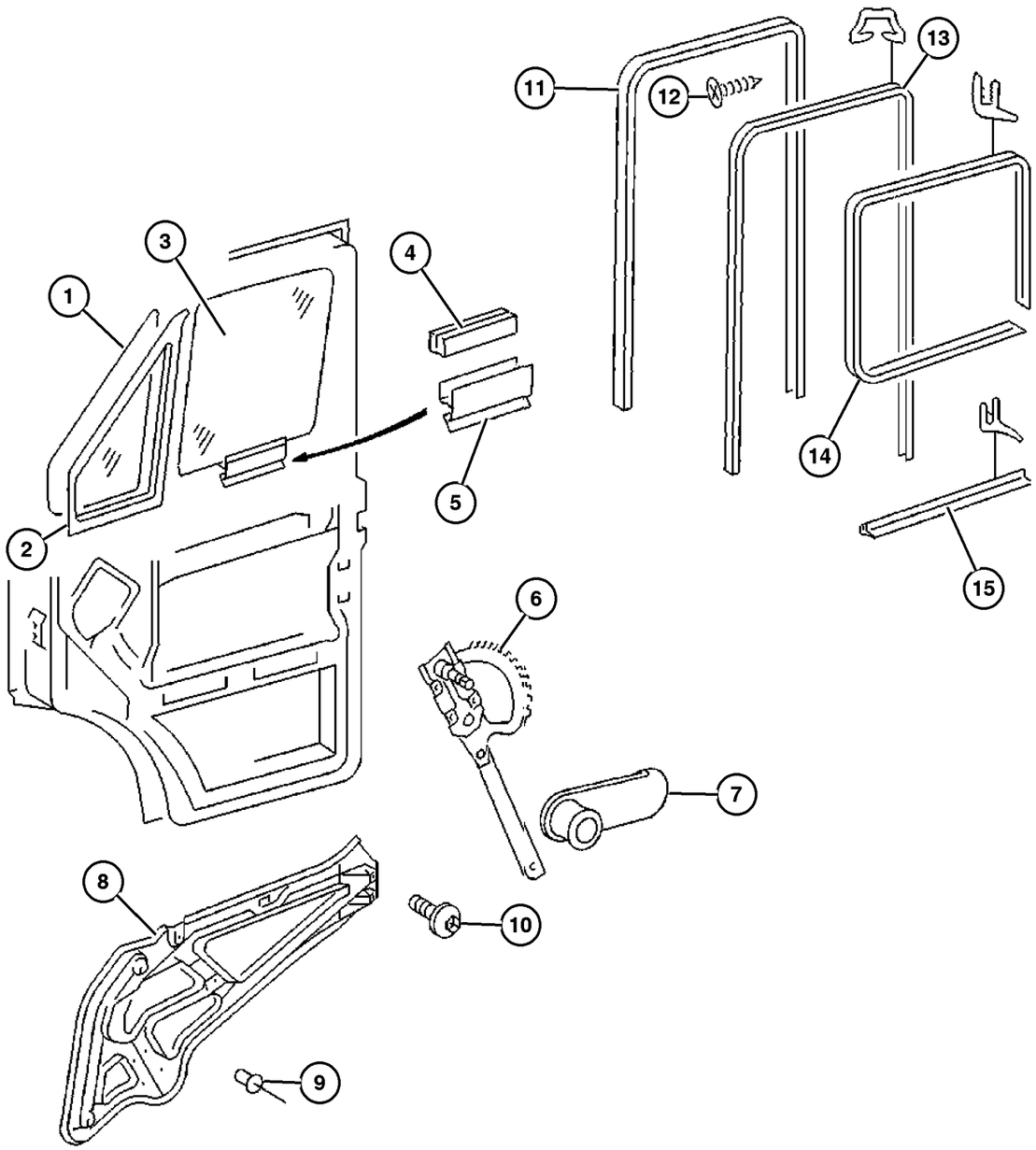

ITEM	PART NUMBER	QTY	LINE	SERIES	BODY	ENGINE	TRANS	TRIM	DESCRIPTION
	5133 513AA	8	2, 6	L	01, 02, 06				
		8	2, 6	L	11, 12, 14, 15, 16				
		8	2, 6	L	51, 52, 54, 55, 56				
		8	3, 7	L	02, 06				
		8	3, 7	L	12, 15, 16				
13									WEATHERSTRIP, Glass Channel Run
	5123 782AA	1	2, 6	L	01, 02, 06				
		1	2, 6	L	11, 12, 14, 15, 16				
		1	2, 6	L	51, 52, 54, 55, 56				
		1	3, 7	L	02, 06				
		1	3, 7	L	12, 15, 16				
14									WEATHERSTRIP, Front Door
	5123 780AA	1	2, 6	L	01, 02, 06				
		1	2, 6	L	11, 12, 14, 15, 16				
		1	2, 6	L	51, 52, 54, 55, 56				
		1	3, 7	L	02, 06				
		1	3, 7	L	12, 15, 16				
15									WEATHERSTRIP, Sill Front Secondary
	5123 775AA	1	2, 6	L	01, 02, 06				
		1	2, 6	L	11, 12, 14, 15, 16				

Refer to Model Legend Information Bookmark

Door, Front Glass and Regulator Handle
Figure DVA-120

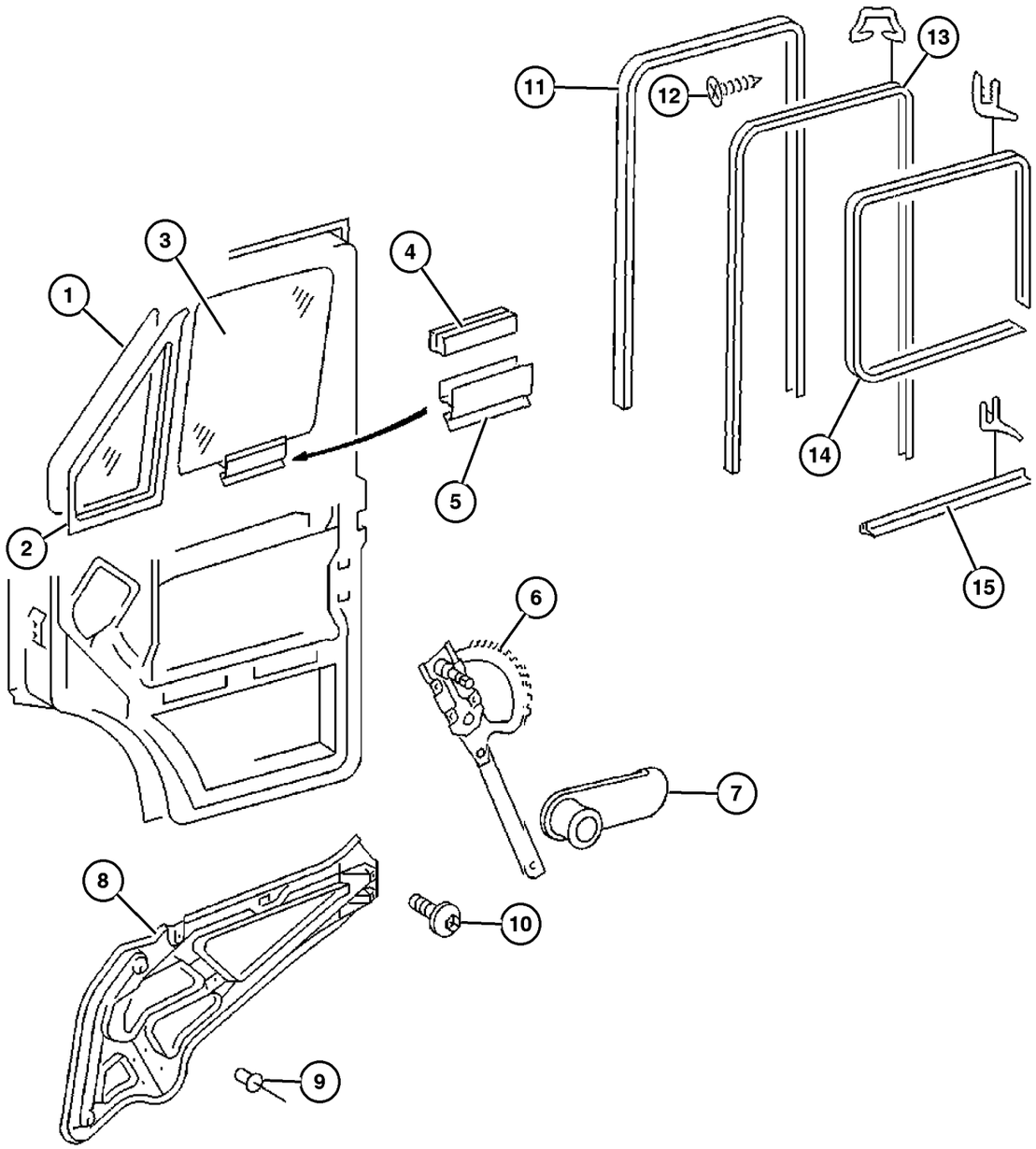

ITEM	PART NUMBER	QTY	LINE	SERIES	BODY	ENGINE	TRANS	TRIM	DESCRIPTION
		1	2, 6	L	51, 52, 54, 55, 56				
		1	3, 7	L	02, 06				
		1	3, 7	L	12, 15, 16				

Refer to Model Legend Information Bookmark

Door, Front Exterior Handle and Links
Figure DVA-130

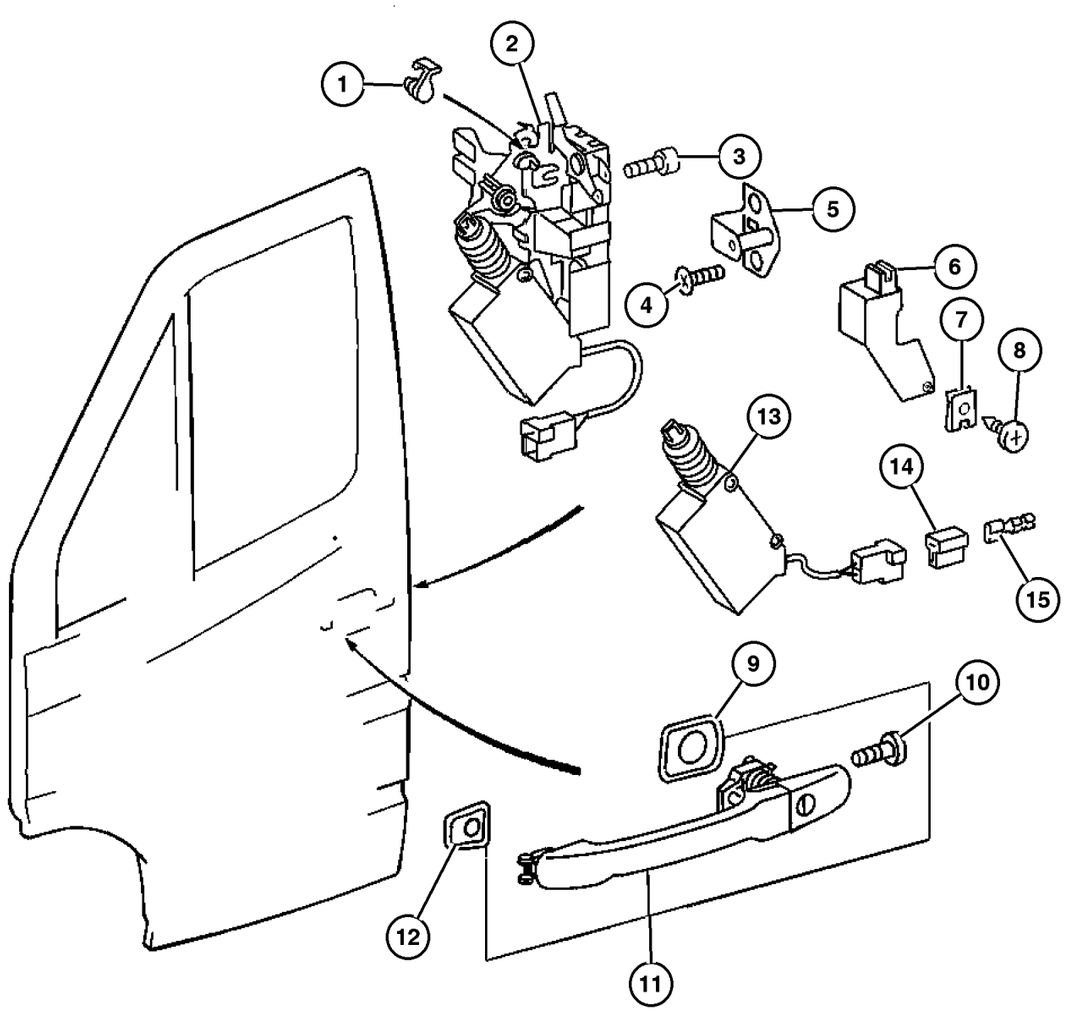

ITEM	PART NUMBER	QTY	LINE	SERIES	BODY	ENGINE	TRANS	TRIM	DESCRIPTION
1									CONNECTOR, Solenoid
	5103 674AA	1	2, 6	L	01, 02, 06				
		1	2, 6	L	11, 12, 14, 15, 16				
		1	2, 6	L	51, 52, 54, 55, 56				
		1	3, 7	L	02, 06				
		1	3, 7	L	12, 15, 16				
2									LATCH, Front Door
	5123 700AA	1	2, 6	L	01, 02, 06				
		1	2, 6	L	11, 12, 14, 15, 16				
		1	2, 6	L	51, 52, 54, 55, 56				
		1	3, 7	L	02, 06				
		1	3, 7	L	12, 15, 16				
3									SCREW
	5103 723AA	3	2, 6	L	01, 02, 06				
		3	2, 6	L	11, 12, 14, 15, 16				
		3	2, 6	L	51, 52, 54, 55, 56				
		3	3, 7	L	02, 06				
		3	3, 7	L	12, 15, 16				
4									SCREW
	5103 715AA	2	2, 6	L	01, 02, 06				
		2	2, 6	L	11, 12, 14, 15, 16				
		2	2, 6	L	51, 52, 54, 55, 56				

Refer to Model Legend Information Bookmark

AR = Use as required - = Non illustrated part # = New this model year

March 3, 2006

« RETURN TO GROUP INDEX

»

Door, Front Exterior Handle and Links
Figure DVA-130

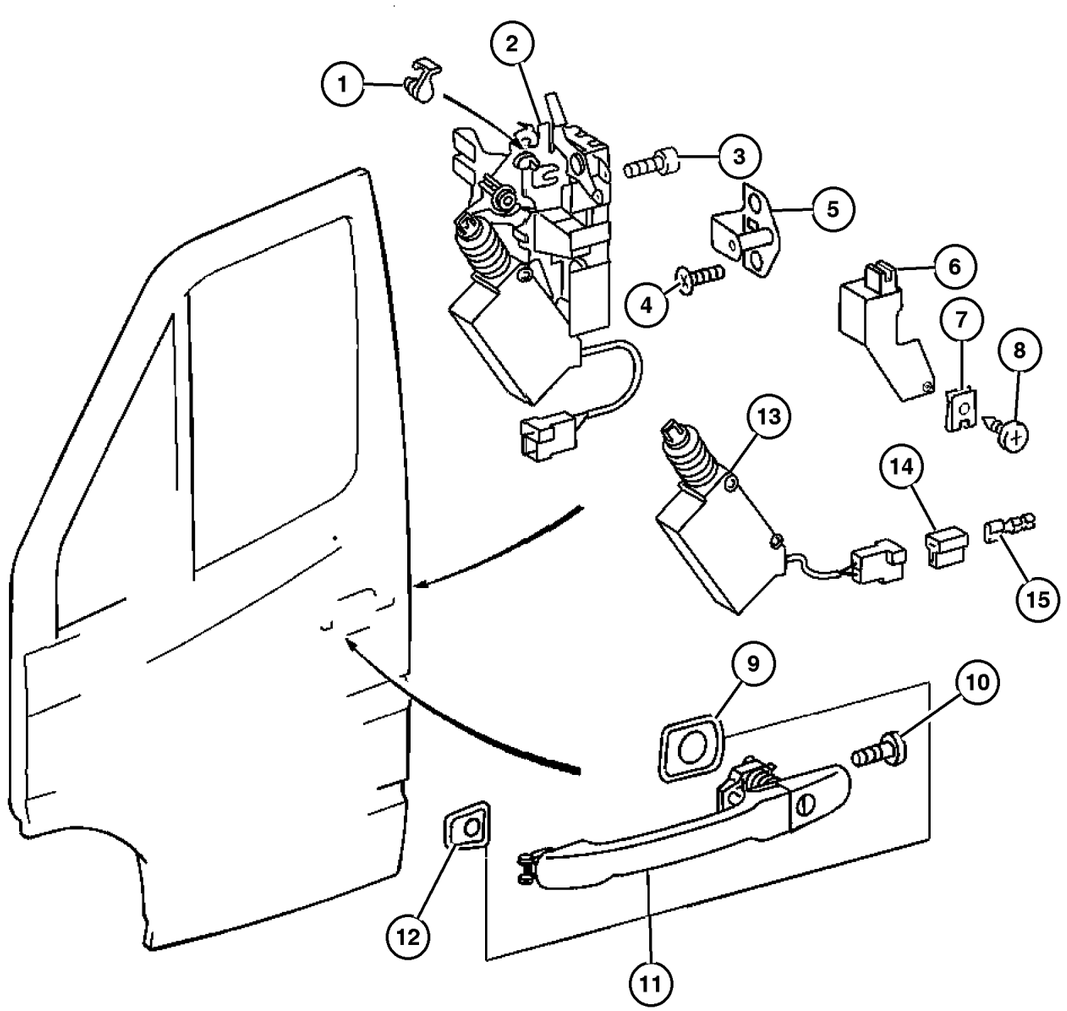

ITEM	PART NUMBER	QTY	LINE	SERIES	BODY	ENGINE	TRANS	TRIM	DESCRIPTION
		2	3, 7	L	02, 06				
		2	3, 7	L	12, 15, 16				
5									STRIKER
	5104 330AA	1	2, 6	L	01, 02, 06				
		1	2, 6	L	11, 12, 14, 15, 16				
		1	2, 6	L	51, 52, 54, 55, 56				
		1	3, 7	L	02, 06				
		1	3, 7	L	12, 15, 16				
6									COVER, Lock Housing
	5123 764AA	1	2, 6	L	01, 02, 06				
		1	2, 6	L	11, 12, 14, 15, 16				
		1	2, 6	L	51, 52, 54, 55, 56				
		1	3, 7	L	02, 06				
		1	3, 7	L	12, 15, 16				
7									CLIP, U Type
	5125 858AA	1	2, 6	L	01, 02, 06				
		1	2, 6	L	11, 12, 14, 15, 16				
		1	2, 6	L	51, 52, 54, 55, 56				
		1	3, 7	L	02, 06				
		1	3, 7	L	12, 15, 16				
8									SCREW, Tapping
	5126 095AA	1	2, 6	L	01, 02, 06				
		1	2, 6	L	11, 12, 14, 15, 16				

Refer to Model Legend Information Bookmark

AR = Use as required - = Non illustrated part # = New this model year

March 3, 2006

« RETURN TO GROUP INDEX

Door, Front Exterior Handle and Links
Figure DVA-130

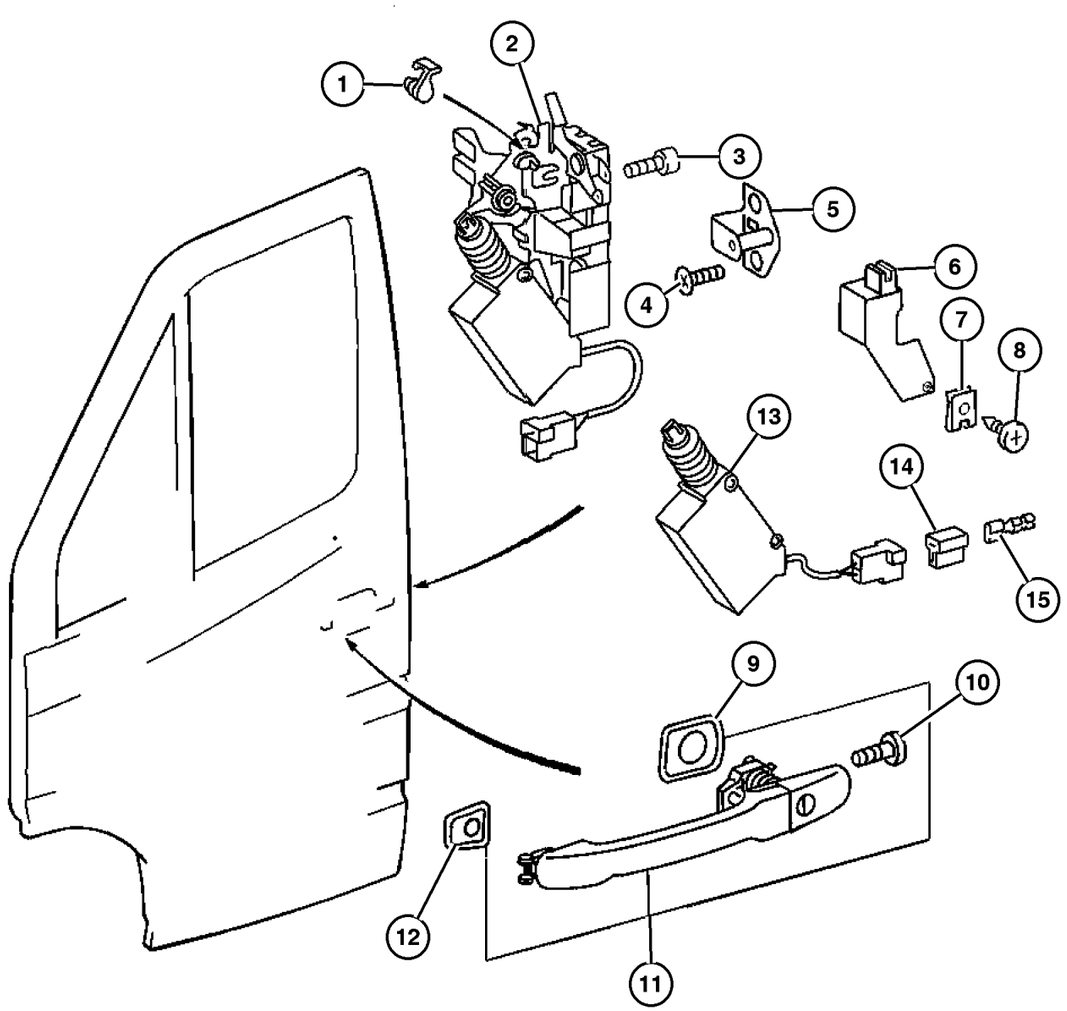

ITEM	PART NUMBER	QTY	LINE	SERIES	BODY	ENGINE	TRANS	TRIM	DESCRIPTION
		1	2, 6	L	51, 52,				
					54, 55,				
					56				
		1	3, 7	L	02, 06				
		1	3, 7	L	12, 15,				
					16				
9									PAD
	5103 673AA	1	2, 6	L	01, 02,				
					06				
		1	2, 6	L	11, 12,				
					14, 15,				
					16				
		1	2, 6	L	51, 52,				
					54, 55,				
					56				
		1	3, 7	L	02, 06				
		1	3, 7	L	12, 15,				
					16				
10									SCREW, Front Door Handle
	5125 414AA	1	2, 6	L	01, 02,				
					06				
		1	2, 6	L	11, 12,				
					14, 15,				
					16				
		1	2, 6	L	51, 52,				
					54, 55,				
					56				
		1	3, 7	L	02, 06				
		1	3, 7	L	12, 15,				
					16				
11									HANDLE, Front Door
	5124 094AA	1	2, 6	L	01, 02,				Right & Left
					06				
		1	2, 6	L	11, 12,				Right & Left
					14, 15,				
					16				
		1	2, 6	L	51, 52,				Right & Left
					54, 55,				
					56				
		1	3, 7	L	02, 06				Right & Left
		1	3, 7	L	12, 15,				Right & Left
					16				
12									PAD
	5103 672AA	1	2, 6	L	01, 02,				
					06				

Refer to Model Legend Information Bookmark

Door, Front Exterior Handle and Links
Figure DVA-130

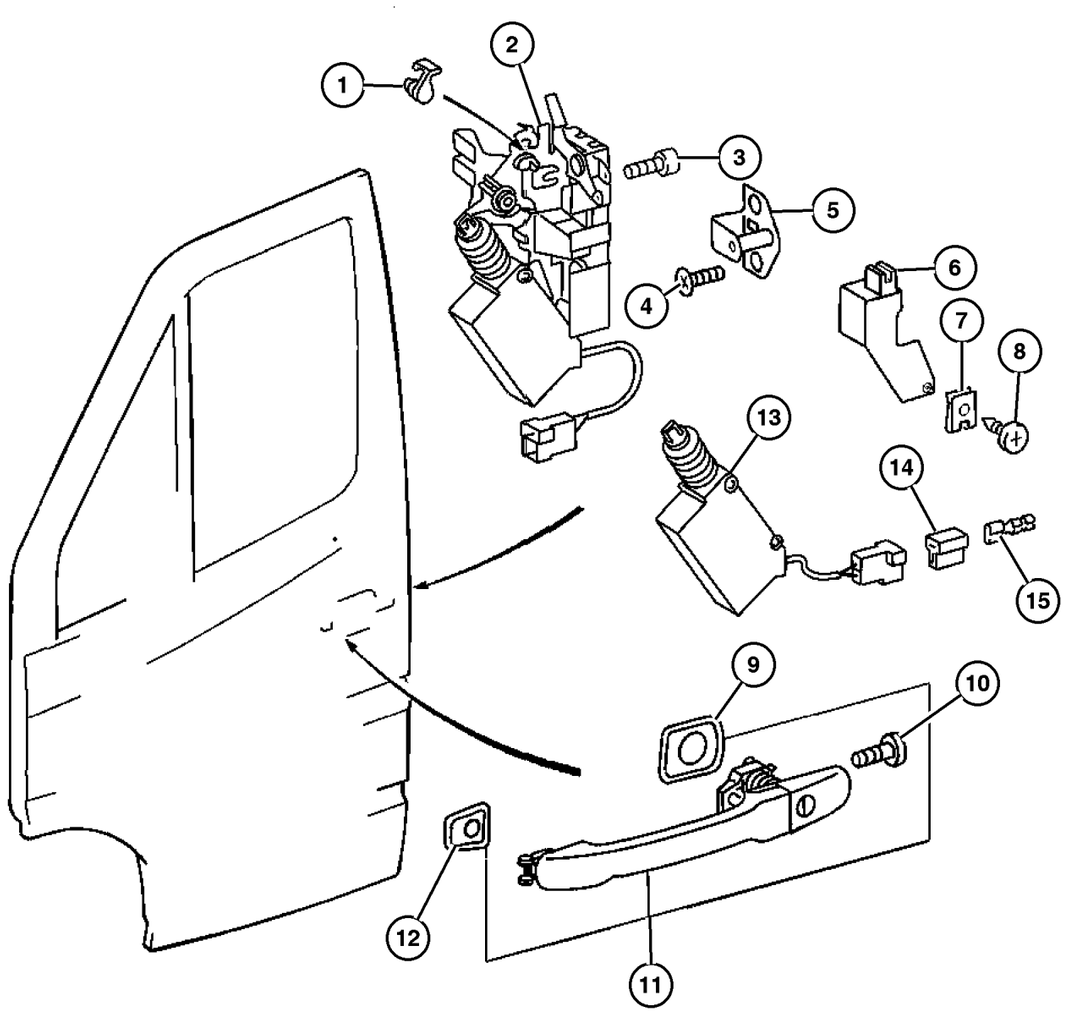

ITEM	PART NUMBER	QTY	LINE	SERIES	BODY	ENGINE	TRANS	TRIM	DESCRIPTION
		1	2, 6	L	11, 12, 14, 15, 16				
		1	2, 6	L	51, 52, 54, 55, 56				
		1	3, 7	L	02, 06				
		1	3, 7	L	12, 15, 16				
13									ACTUATOR, Power Door Lock
	5133 510AA	1	2, 6	L	01, 02, 06				Without Convenience Locking System, Right
		1	2, 6	L	11, 12, 14, 15, 16				Without Convenience Locking System, Right
		1	2, 6	L	51, 52, 54, 55, 56				Without Convenience Locking System, Right
		1	3, 7	L	02, 06				Without Convenience Locking System, Right
		1	3, 7	L	12, 15, 16				Without Convenience Locking System, Right
	5133 511AA	1	2, 6	L	51, 52, 54, 55, 56				Without Convenience Locking System, Left
		1	3, 7	L	02, 06				Without Convenience Locking System, Left
		1	3, 7	L	12, 15, 16				Without Convenience Locking System, Left
		1	2, 6	L	01, 02, 06				Without Convenience Locking System, Left
		1	2, 6	L	11, 12, 14, 15, 16				Without Convenience Locking System, Left
	5133 512AA	1	2, 6	L	01, 02, 06				With Convenience Locking System, Right
		1	2, 6	L	11, 12, 14, 15, 16				With Convenience Locking System, Right
		1	2, 6	L	51, 52, 54, 55, 56				With Convenience Locking System, Right
		1	3, 7	L	02, 06				With Convenience Locking System, Right

Refer to Model Legend Information Bookmark

Door, Front Exterior Handle and Links
Figure DVA-130

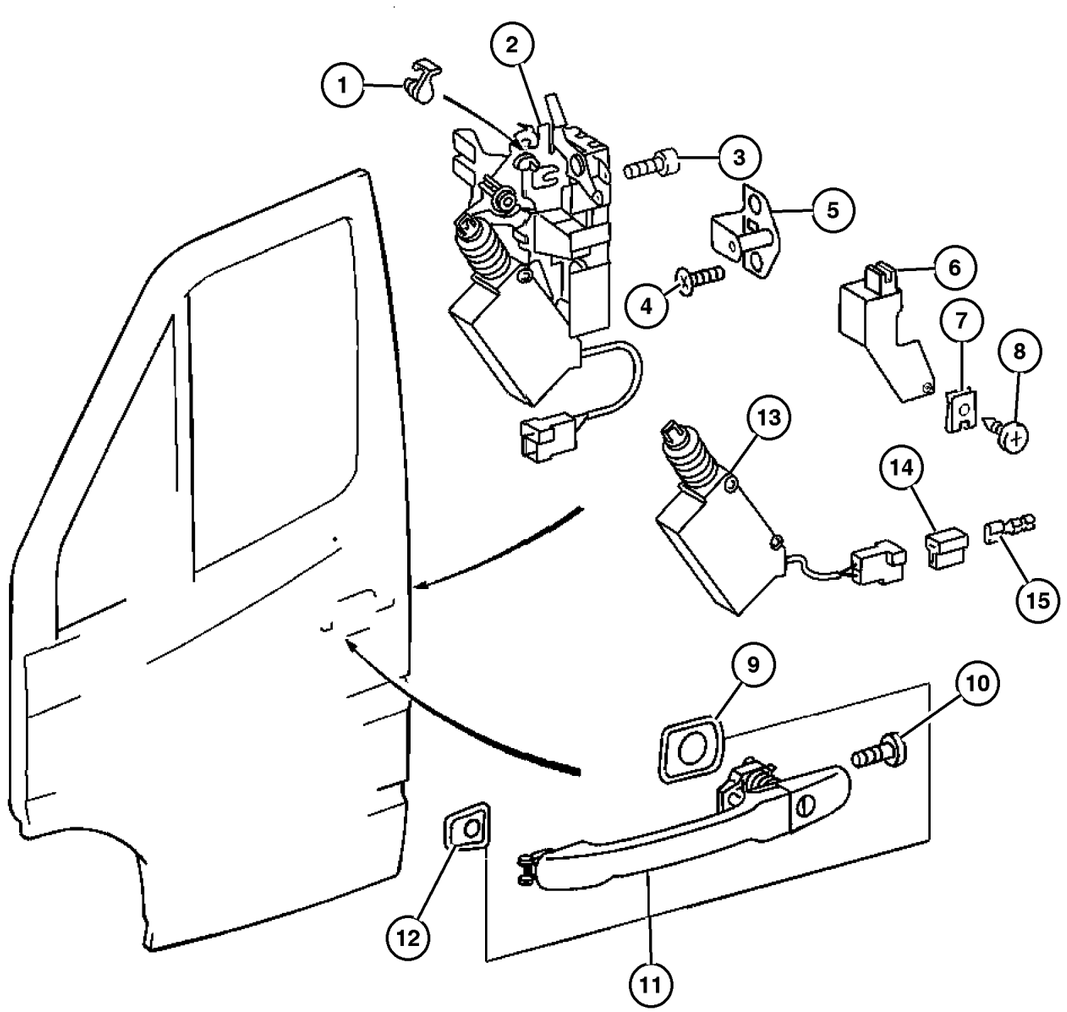

ITEM	PART NUMBER	QTY	LINE	SERIES	BODY	ENGINE	TRANS	TRIM	DESCRIPTION
		1	3, 7	L	12, 15, 16				With Convenience Locking System
	5133 986AA	1	2, 6	L	01, 02, 06				With Convenience Locking System, Left
		1	2, 6	L	11, 12, 14, 15, 16				With Convenience Locking System, Left
		1	2, 6	L	51, 52, 54, 55, 56				With Convenience Locking System, Left
		1	3, 7	L	02, 06				With Convenience Locking System, Left
		1	3, 7	L	12, 15, 16				With Convenience Locking System, Left
14	5103 754AA	1	2, 6	L	01, 02, 06				INSULATOR, 2 Way Female
		1	2, 6	L	11, 12, 14, 15, 16				
		1	2, 6	L	51, 52, 54, 55, 56				
		2	3, 7	L	02, 06				
		2	3, 7	L	12, 15, 16				
15	5114 451AA	99	2, 6	L	01, 02, 06				TERMINAL, Female
		99	2, 6	L	11, 12, 14, 15, 16				
		99	2, 6	L	51, 52, 54, 55, 56				
		99	3, 7	L	02, 06				
		99	3, 7	L	12, 15, 16				

Refer to Model Legend Information Bookmark

AR = Use as required - = Non illustrated part # = New this model year

March 3, 2006

« RETURN TO GROUP INDEX

Door,Sliding Cargo Shell and Hinges
Figure DVA-310

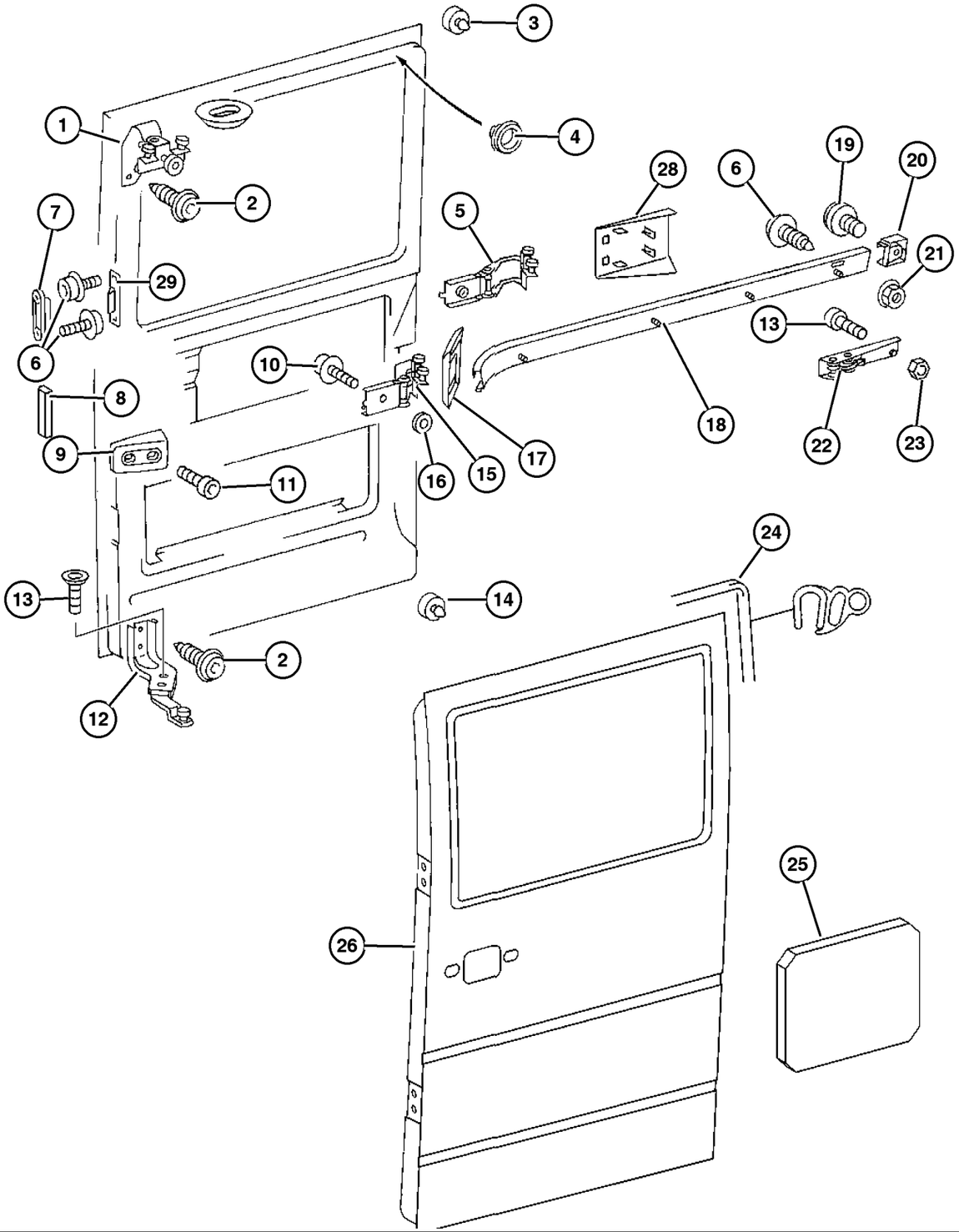

ITEM	PART NUMBER	QTY	LINE	SERIES	BODY	ENGINE	TRANS	TRIM	DESCRIPTION
1									SLIDER, Body Hardware
	5103 589AA	1	2, 6	L	11, 12, 14, 15, 16				[GKA], Right
		1	2, 6	L	51, 52, 54, 55, 56				[GKA], Right
		1	3, 7	L	12, 15, 16				[GKA], Right
	5124 089AA	1	2, 6	L	11, 12, 14, 15, 16				[GKE], Left
		1	2, 6	L	51, 52, 54, 55, 56				[GKE], Left
		1	3, 7	L	12, 15, 16				[GKE], Left
2									SCREW
	5104 610AA	2	2, 6	L	01, 02, 06				
		2	2, 6	L	11, 12, 14, 15, 16				
		2	2, 6	L	51, 52, 54, 55, 56				
		2	3, 7	L	02, 06				
		2	3, 7	L	12, 15, 16				
3									BUMPER, Sliding Door Center Track, Upper
	5103 918AA	1	2, 6	L	11, 12, 14, 15, 16				[GKE]
		1	2, 6	L	51, 52, 54, 55, 56				[GKE]
		1	3, 7	L	12, 15, 16				[GKE]
4									PLUG, Expansion
	5125 514AA	2	2, 6	L	11, 12, 14, 15, 16				

Refer to Model Legend Information Bookmark

AR = Use as required - = Non illustrated part # = New this model year

March 3, 2006

« RETURN TO GROUP INDEX

»

Door,Sliding Cargo Shell and Hinges
Figure DVA-310

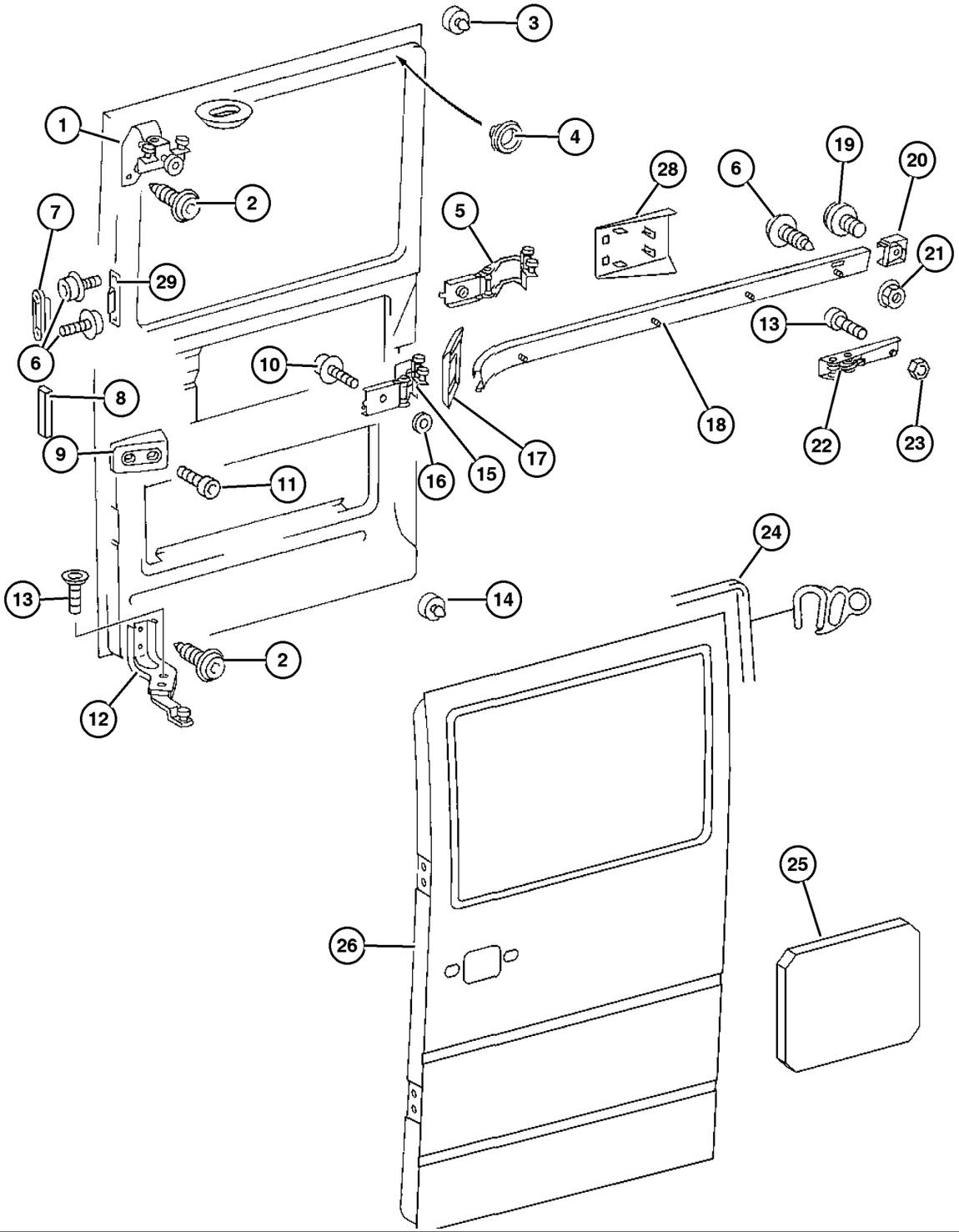

ITEM	PART NUMBER	QTY	LINE	SERIES	BODY	ENGINE	TRANS	TRIM	DESCRIPTION
		4	2, 6	L	51, 52, 54, 55, 56				
		2	3, 7	L	12, 15, 16				
	5133 514AA	1	2, 6	L	01, 02, 06				
		1	3, 7	L	02, 06				
5									SLIDER, Body Hardware, Body Side
	5103 607AA	1	2, 6	L	11, 12, 14, 15, 16				
		1	3, 7	L	12, 15				
6									SCREW
	5103 713AA	4	2, 6	L	01, 02, 06				
		4	2, 6	L	11, 12, 14, 15, 16				
		4	2, 6	L	51, 52, 54, 55, 56				
		4	3, 7	L	02, 06				
		4	3, 7	L	12, 15, 16				
7									STABILIZER, Sliding Door
	5104 429AA	2	2, 6	L	11, 12, 14, 15, 16				
		2	3, 7	L	12, 15, 16				
8									BUMPER, Rubber
	5104 427AA	2	2, 6	L	11, 12, 14, 15, 16				[GKE]
		2	2, 6	L	51, 52, 54, 55, 56				[GKE]
		2	3, 7	L	12, 15, 16				[GKE]
9									BUMPER, Rubber
	5104 411AA	1	2, 6	L	11, 12, 14, 15, 16				[GKE]

Refer to Model Legend Information Bookmark

AR = Use as required - = Non illustrated part # = New this model year

March 3, 2006

Door,Sliding Cargo Shell and Hinges
Figure DVA-310

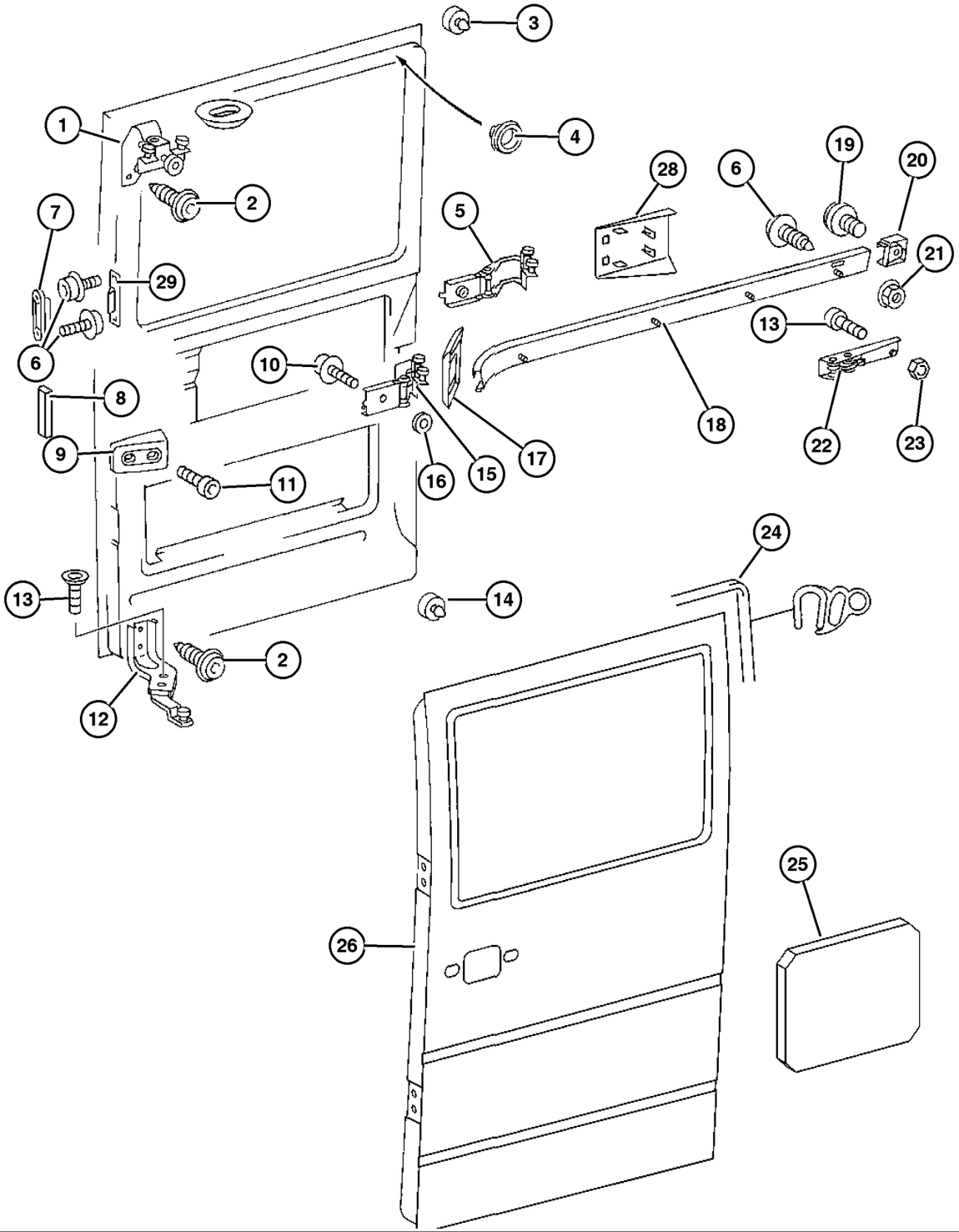

ITEM	PART NUMBER	QTY	LINE	SERIES	BODY	ENGINE	TRANS	TRIM	DESCRIPTION
		1	2, 6	L	51, 52, 54, 55, 56				[GKE]
		1	3, 7	L	12, 15, 16				[GKE]
10									SCREW
	5103 713AA	4	2, 6	L	01, 02, 06				
		4	2, 6	L	11, 12, 14, 15, 16				
		4	2, 6	L	51, 52, 54, 55, 56				
		4	3, 7	L	02, 06				
		4	3, 7	L	12, 15, 16				
11									SCREW
	5114 443AA	2	2, 6	L	11, 12, 14, 15, 16				[GKE]
		2	2, 6	L	51, 52, 54, 55, 56				[GKE]
		2	3, 7	L	12, 15, 16				[GKE]
12									SLIDER, Body Hardware
	5103 588AA	1	2, 6	L	11, 12, 14, 15, 16				[GKA], Right
		1	2, 6	L	51, 52, 54, 55, 56				[GKA], Right
		1	3, 7	L	12, 15, 16				[GKA], Right
	5124 080AA	1	2, 6	L	11, 12, 14, 15, 16				[GKE], Left
		1	2, 6	L	51, 52, 54, 55, 56				[GKE], Left
		1	3, 7	L	12, 15, 16				[GKE], Left
13									SCREW

Refer to Model Legend Information Bookmark

AR = Use as required - = Non illustrated part # = New this model year

March 3, 2006

« RETURN TO GROUP INDEX

Door,Sliding Cargo Shell and Hinges
Figure DVA-310

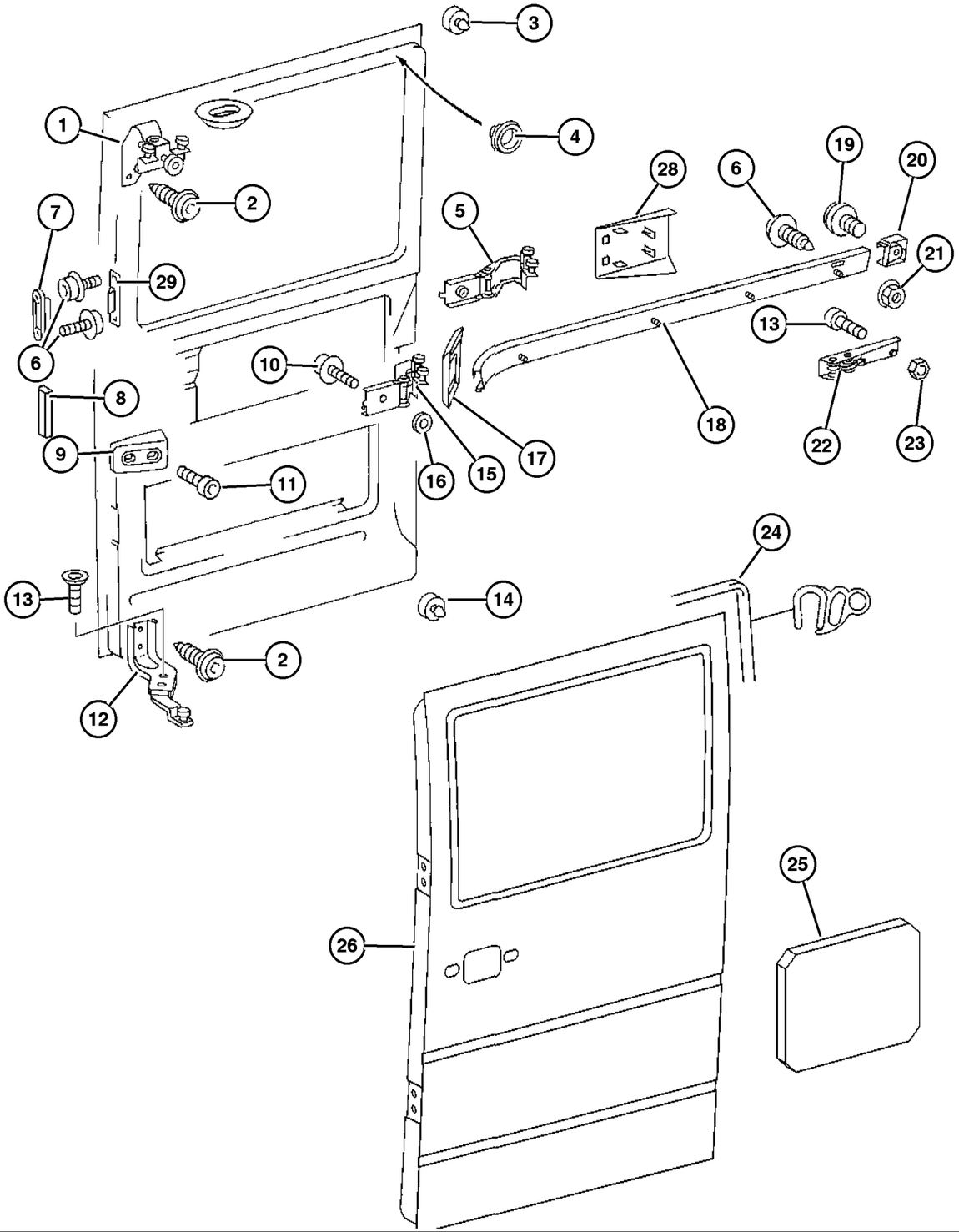

ITEM	PART NUMBER	QTY	LINE	SERIES	BODY	ENGINE	TRANS	TRIM	DESCRIPTION
	5133 540AA	2	2, 6	L	11, 12, 14, 15, 16				[GKE]
		2	2, 6	L	51, 52, 54, 55, 56				[GKE]
		2	3, 7	L	12, 15, 16				[GKE]
14									BUMPER, Sliding Door Center Track, Lower
	5103 813AA	1	2, 6	L	11, 12, 14, 15, 16				[GKE]
		1	2, 6	L	51, 52, 54, 55, 56				[GKE]
		1	3, 7	L	12, 15, 16				[GKE]
15									SLIDER, Body Hardware, Door Side
	5103 590AA	1	2, 6	L	11, 12, 14, 15, 16				[GKA], Right
		1	2, 6	L	51, 52, 54, 55, 56				[GKA], Right
		1	3, 7	L	16				Right
	5124 080AA	1	2, 6	L	11, 12, 14, 15, 16				[GKE], Left
		1	2, 6	L	51, 52, 54, 55, 56				[GKE], Left
		1	3, 7	L	12, 15, 16				[GKE], Left
16									WASHER
	5133 526AA	1	2, 6	L	11, 12, 14, 15, 16				[GKE]
		1	2, 6	L	51, 52, 54, 55, 56				[GKE]
		1	3, 7	L	16				
17									SEAL, Door

Refer to Model Legend Information Bookmark

AR = Use as required - = Non illustrated part # = New this model year

March 3, 2006

« RETURN TO GROUP INDEX

Door,Sliding Cargo Shell and Hinges
Figure DVA-310

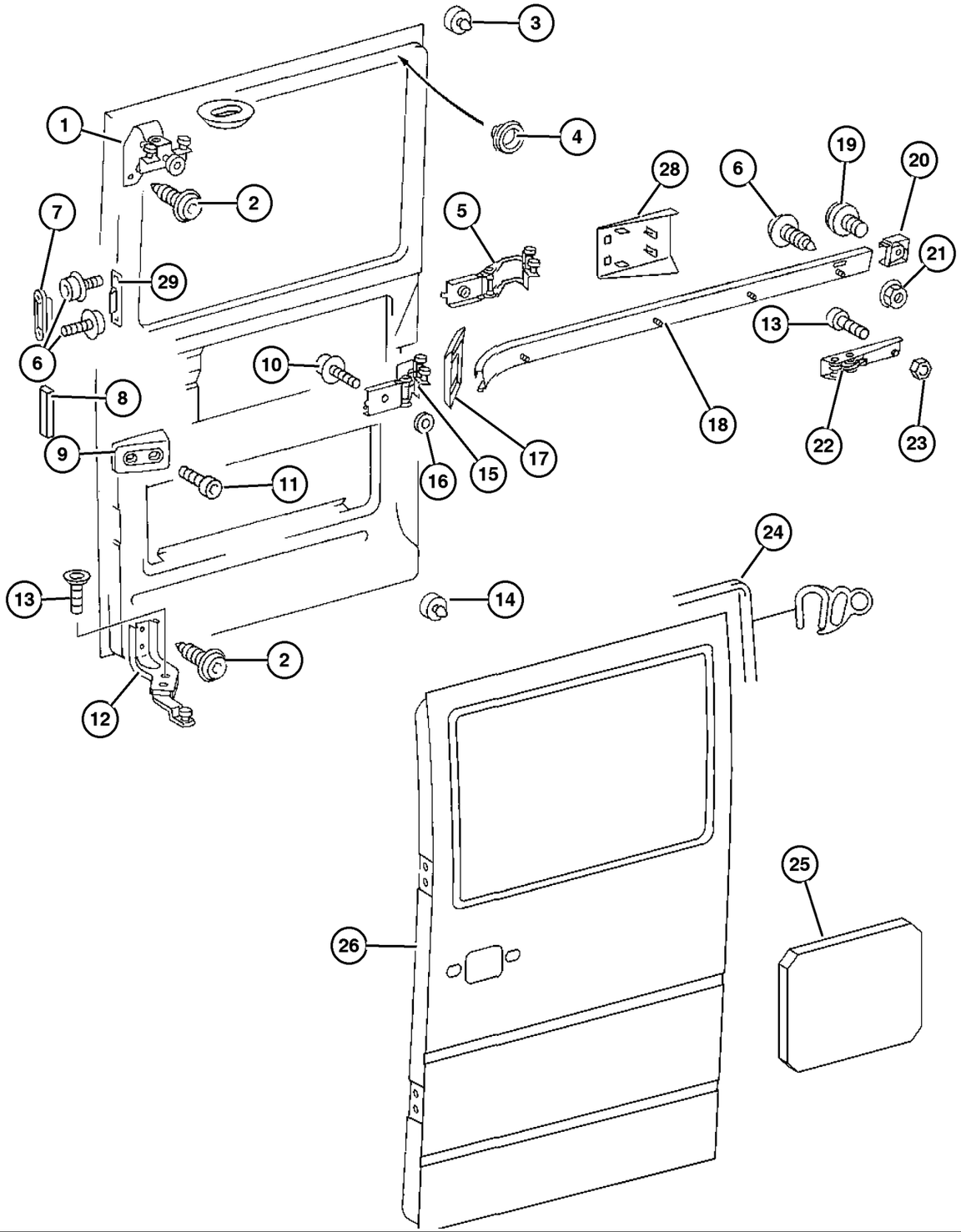

ITEM	PART NUMBER	QTY	LINE	SERIES	BODY	ENGINE	TRANS	TRIM	DESCRIPTION
	5104 426AA	1	2, 6	L	11, 12,				[GKE]
					14, 15,				
					16				
		1	2, 6	L	51, 52,				[GKE]
					54, 55,				
					56				
		1	3, 7	L	16				
18									RAIL, Slider Door
	5104 418AA	1	2, 6	L	11, 12,				[GKA], Right
					14, 15,				
					16				
		1	2, 6	L	51, 52,				[GKA], Right
					54, 55,				
					56				
		1	3, 7	L	12, 15,				[GKA], Right
					16				
	5124 076AA	1	2, 6	L	11, 12,				[GKE], Left
					14, 15,				
					16				
		1	2, 6	L	51, 52,				[GKE], Left
					54, 55,				
					56				
		1	3, 7	L	12, 15,				[GKE], Left
					16				
19									SCREW
	5126 103AA	1	2, 6	L	11, 12,				[GKE]
					14, 15,				
					16				
		1	2, 6	L	51, 52,				[GKE]
					54, 55,				
					56				
		1	3, 7	L	12, 15,				[GKE]
					16				
20									CAP, Rail
	5104 431AA	1	2, 6	L	11, 12,				[GKA], Right
					14, 15,				
					16				
		1	2, 6	L	51, 52,				[GKA], Right
					54, 55,				
					56				
		1	3, 7	L	12, 15,				[GKA], Right
					16				
	5124 105AA	1	2, 6	L	11, 12,				[GKE], Left
					14, 15,				
					16				

Refer to Model Legend Information Bookmark

AR = Use as required - = Non illustrated part # = New this model year

March 3, 2006

« RETURN TO GROUP INDEX

Door,Sliding Cargo Shell and Hinges
Figure DVA-310

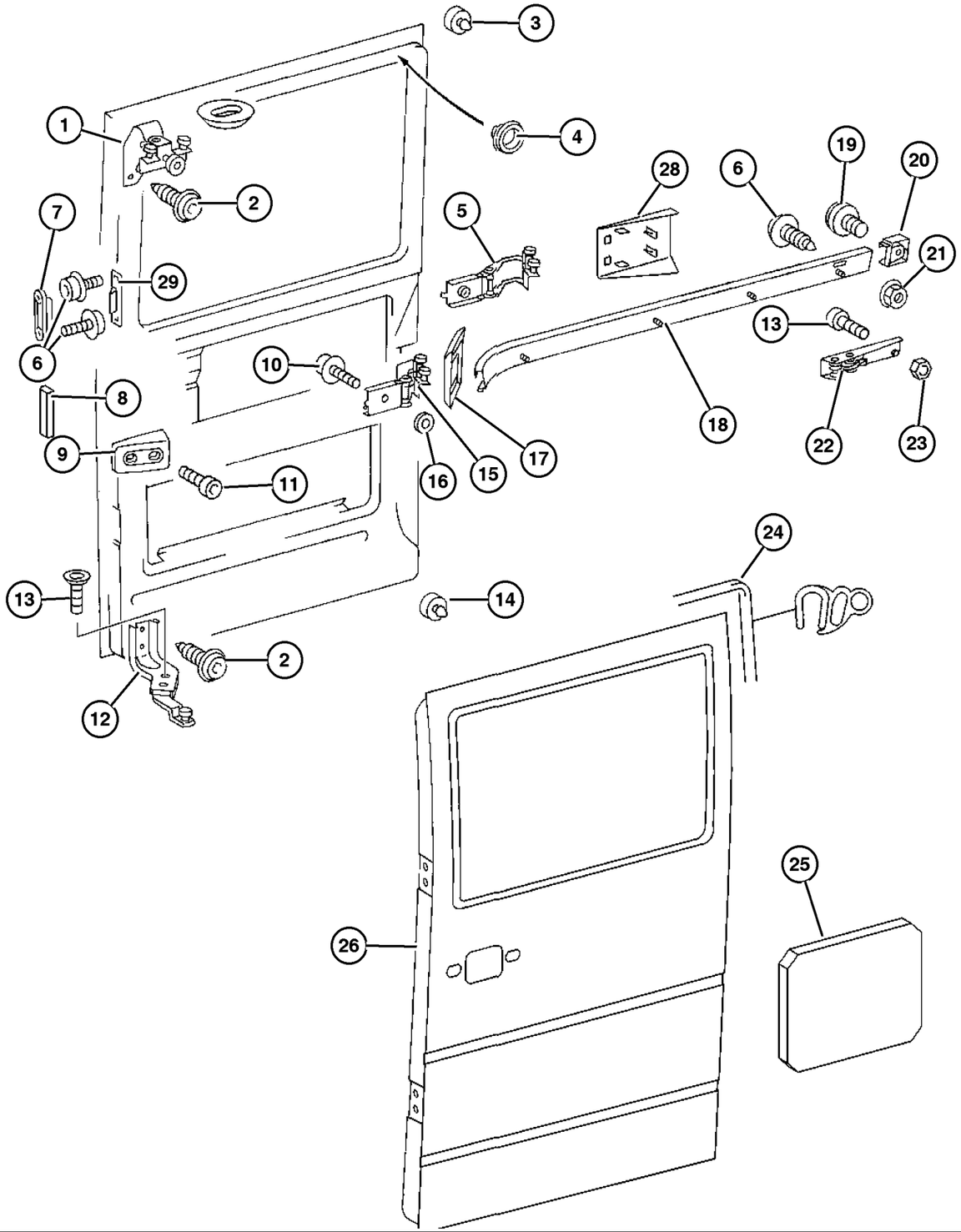

ITEM	PART NUMBER	QTY	LINE	SERIES	BODY	ENGINE	TRANS	TRIM	DESCRIPTION
		1	2, 6	L	51, 52, 54, 55, 56				[GKE], Left
		1	3, 7	L	12, 15, 16				[GKE], Left
21	6104 708AA	1	2, 6	L	01, 02, 06				NUT, Hex, M6
22	5104 412AA	1	2, 6	L	11, 12, 14, 15, 16				ADJUSTER, Cargo Door [GKA], Left
		1	2, 6	L	51, 52, 54, 55, 56				[GKA], Left
		1	3, 7	L	12, 15, 16				[GKA], Left
	5124 099AA	1	2, 6	L	11, 12, 14, 15, 16				[GKE], Right
		1	2, 6	L	51, 52, 54, 55, 56				[GKE], Right
		1	3, 7	L	12, 15, 16				[GKE], Right
23	5133 541AA	2	2, 6	L	11, 12, 14, 15, 16				NUT [GKE]
		2	2, 6	L	51, 52, 54, 55, 56				[GKE]
		2	3, 7	L	12, 15, 16				[GKE]
24	5104 302AA	1	2, 6	L	11, 12, 14, 15, 16				WEATHERSTRIP, Cargo Door [GKE]
		1	2, 6	L	51, 52, 54, 55, 56				[GKE]
		1	3, 7	L	12, 15, 16				[GKE]
25									SILENCER, Door

Refer to Model Legend Information Bookmark

AR = Use as required - = Non illustrated part # = New this model year

March 3, 2006

« RETURN TO GROUP INDEX

Door,Sliding Cargo Shell and Hinges
Figure DVA-310

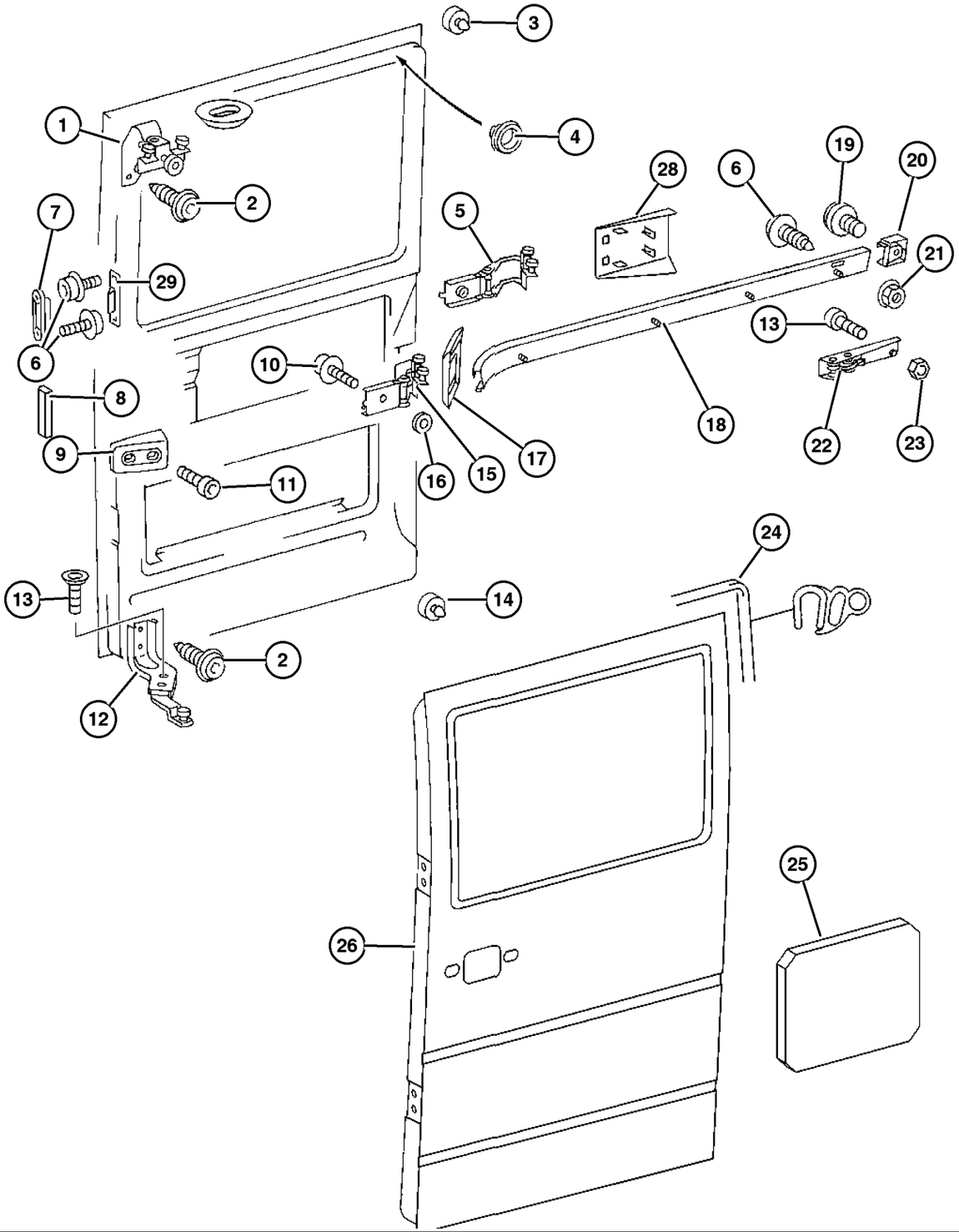

ITEM	PART NUMBER	QTY	LINE	SERIES	BODY	ENGINE	TRANS	TRIM	DESCRIPTION
	5122 517AA	1	2, 6	L	11, 12, 14, 15, 16				
		1	2, 6	L	51, 52, 54, 55, 56				
		1	3, 7	L	12, 15, 16				
26									DOOR, Side Cargo
	5104 355AA	1	2, 6	L	11, 12, 14, 15, 16				[GKE], Left
		1	3, 7	L	16				[5AF+GKE], Left
	5104 356AA	1	2, 6	L	11, 12, 14, 15, 16				[GKA], Right
		1	3, 7	L	16				[5AF+GKA], Right
	5123 795AA	1	2, 6	L	11, 12, 14, 15, 16				[GKE+(GEA=GEC]], Left
		1	2, 6	L	51, 52, 54, 55, 56				[GKE], Left
		1	3, 7	L	16				[5AF+GKE+(GEA=GEC)], Left
	5123 797AA	1	2, 6	L	11, 12, 14, 15, 16				[GKA+(GEN=GEW)], Right
		1	2, 6	L	51, 52, 54, 55, 56				[GKA], Right
		1	3, 7	L	16				[5AF+GKA+(GEN=GEW)], Right
	5123 799AA	1	2, 6	L	11, 12, 14, 15, 16				[GKE+GKG], Left
		1	3, 7	L	12, 15				[5AE+GKE], Left
	5123 801AA	1	2, 6	L	11, 12, 14, 15, 16				[GKG+GKA], Right
		1	3, 7	L	12, 15				[5AE+GKA], Right
	5123 803AA	1	2, 6	L	11, 12, 14, 15, 16				[GKE+GKG+(GEA=GEC)], Left
		1	3, 7	L	12, 15				[5AE+GKE+(GEA=GEC)], Left

Refer to Model Legend Information Bookmark

AR = Use as required - = Non illustrated part # = New this model year

March 3, 2006

Door,Sliding Cargo Shell and Hinges
Figure DVA-310

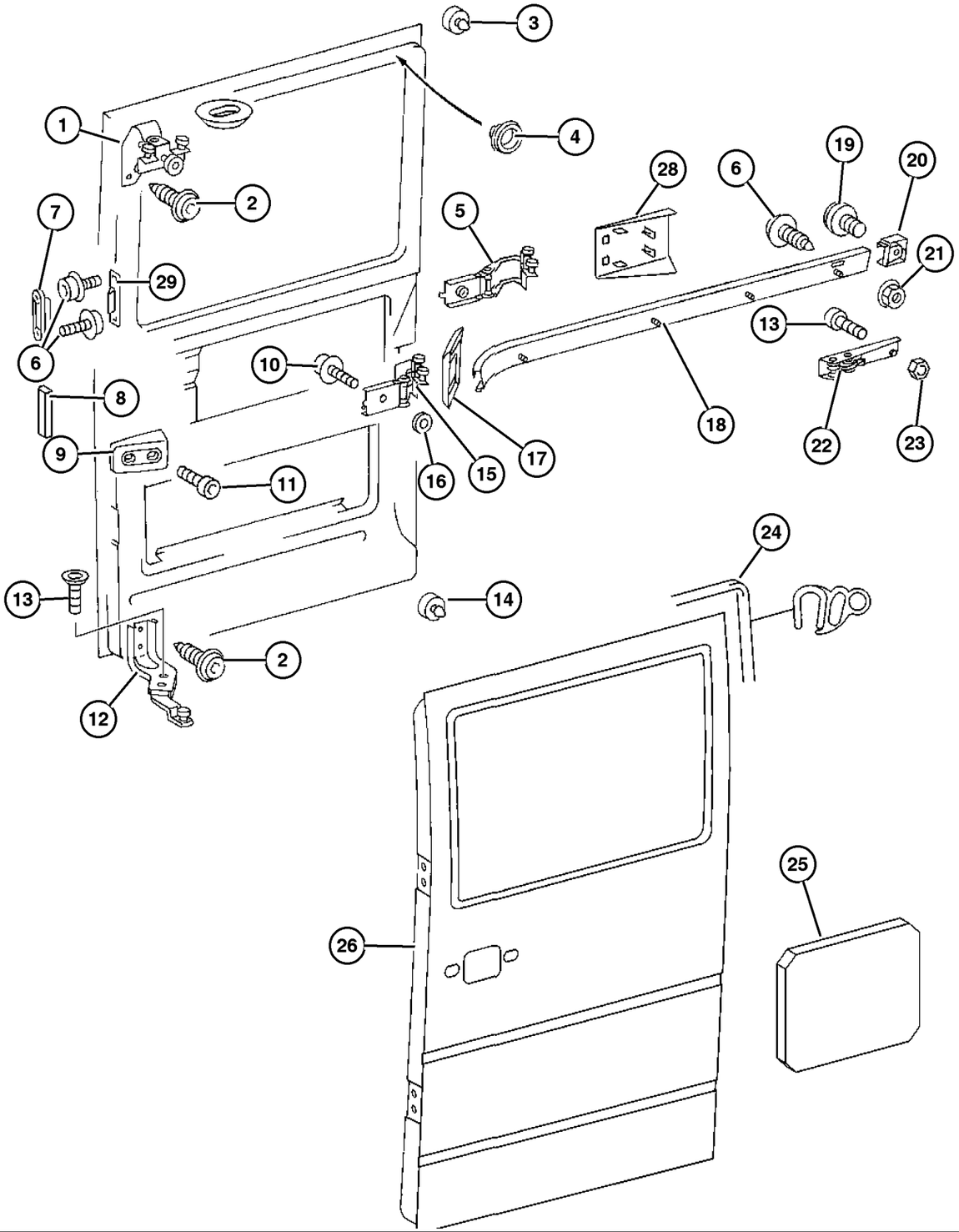

ITEM	PART NUMBER	QTY	LINE	SERIES	BODY	ENGINE	TRANS	TRIM	DESCRIPTION
	5123 805AA	1	2, 6	L	11, 12, 14, 15, 16				[GKG+GKA+(GEN=GEW)], Right
		1	3, 7	L	12, 15				[5AE+GKE+(GEA=GEC)], Right
-27									PANEL, Side Cargo Door
	5104 360AA-	2	2, 6	L	11, 12, 14, 15, 16				
		2	2, 6	L	51, 52, 54, 55, 56				
		2	3, 7	L	12, 15, 16				
28	5104 589AA	1	2, 6	L	11, 12, 14, 15, 16				COVER, Sliding Door Check [GKE+GKG]
		1	3, 7	L	12, 15				[5AE+GKE]
29									TAPPING PLATE, Side Door Lock Striker
	5124 110AA	2	2, 6	L	11, 12, 14, 15, 16				
		2	2, 6	L	51, 52, 54, 55, 56				
		2	3, 7	L	12, 15, 16				

Refer to Model Legend Information Bookmark

AR = Use as required - = Non illustrated part # = New this model year

March 3, 2006

« RETURN TO GROUP INDEX

Door, Sliding Cargo Glass
Figure DVA-320

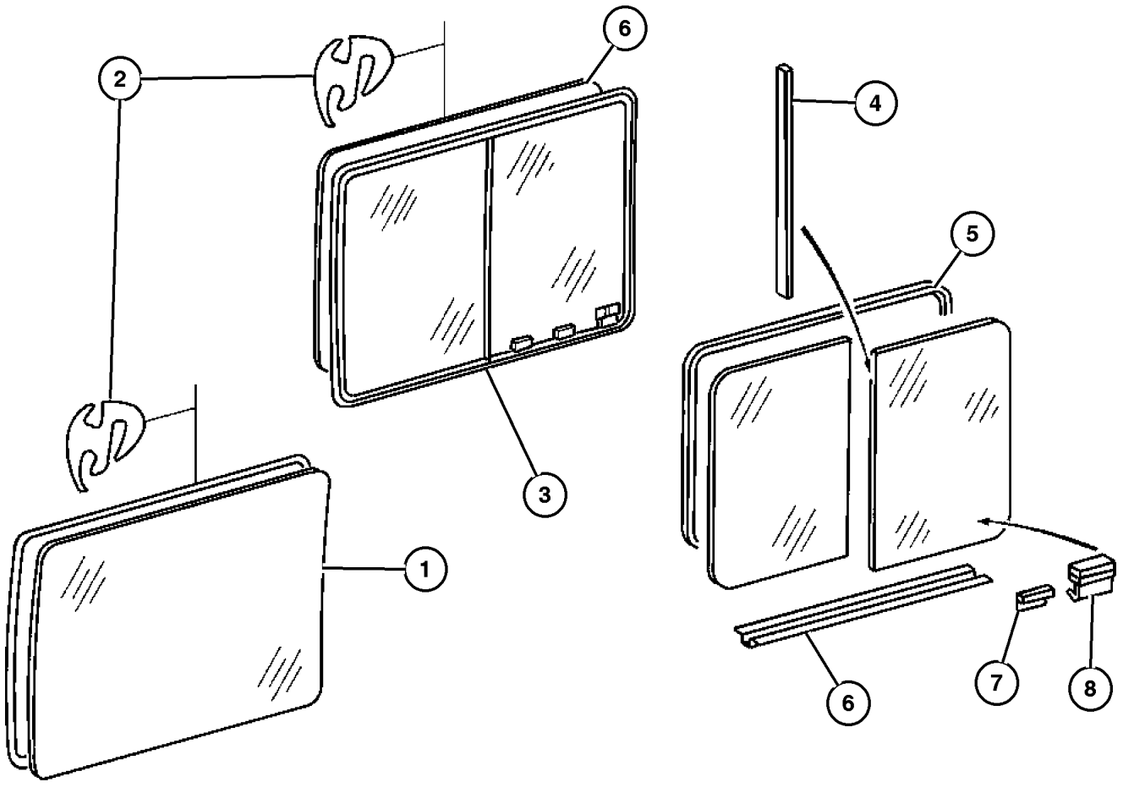

ITEM	PART NUMBER	QTY	LINE	SERIES	BODY	ENGINE	TRANS	TRIM	DESCRIPTION
1									GLASS, Side Cargo Door, Fixed
	5104 363AA	1	2, 6	L	11, 12, 14, 15, 16				
		1	2, 6	L	51, 52, 54, 55, 56				
		1	3, 7	L	12, 15, 16				
2									WEATHERSTRIP, Sliding Door Glass
	5104 364AA	1	2, 6	L	11, 12, 14, 15, 16				
		1	2, 6	L	51, 52, 54, 55, 56				
		1	3, 7	L	12, 15, 16				
3									GLASS, Sliding Door, Vented
	5123 832AA	1	2, 6	L	11, 12, 14, 15, 16				[3FQ], Left
		1	2, 6	L	51, 52, 54, 55, 56				[3FQ], Left
		1	3, 7	L	12, 15, 16				[3FQ], Left
	5123 834AA	1	2, 6	L	11, 12, 14, 15, 16				[3FQ], Right
		1	2, 6	L	51, 52, 54, 55, 56				[3FQ], Right
		1	3, 7	L	12, 15, 16				[3FQ], Right
4									WEATHERSTRIP, Side Panel Vent
	5133 536AA	1	2, 6	L	11, 12, 14, 15, 16				
		1	2, 6	L	51, 52, 54, 55, 56				
		1	3, 7	L	12, 15, 16				
5									WEATHERSTRIP, Side Panel Vent

Refer to Model Legend Information Bookmark

Door, Sliding Cargo Glass
Figure DVA-320

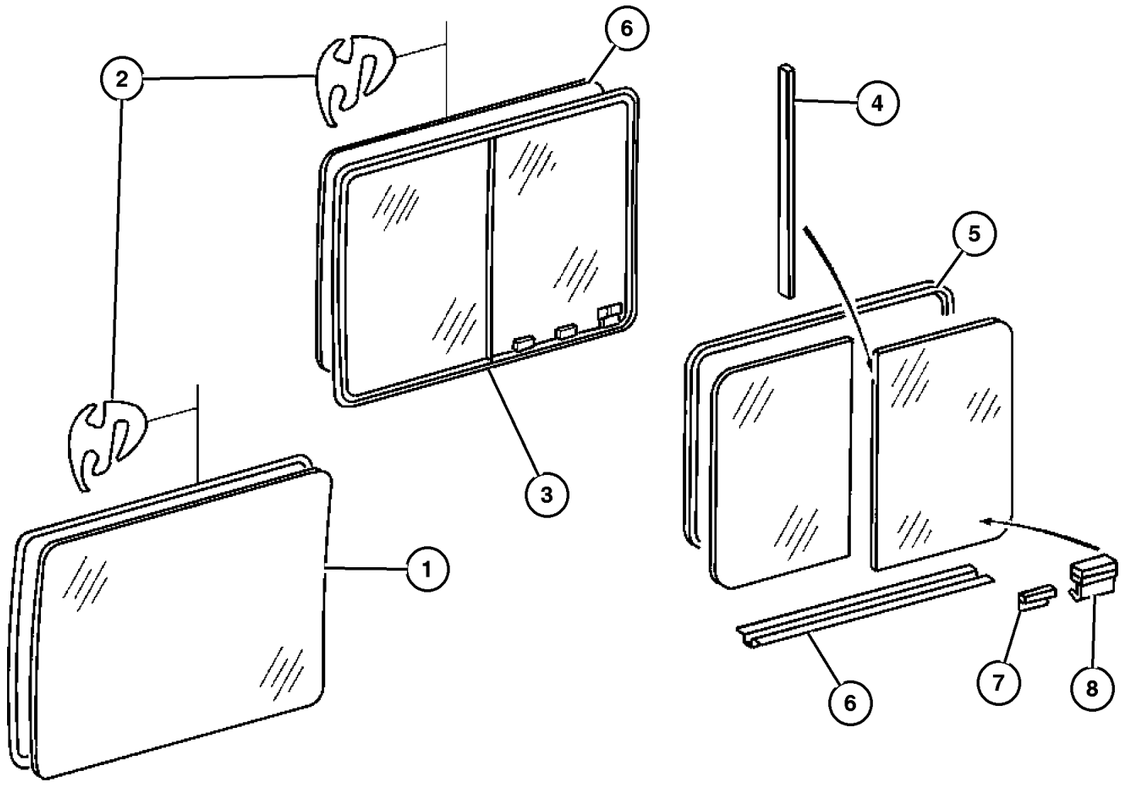

ITEM	PART NUMBER	QTY	LINE	SERIES	BODY	ENGINE	TRANS	TRIM	DESCRIPTION
	5133 533AA	1	2, 6	L	11, 12, 14, 15, 16				
		1	2, 6	L	51, 52, 54, 55, 56				
		1	3, 7	L	12, 15, 16				
6									WEATHERSTRIP, Glass Channel Run
	5133 537AA	1	2, 6	L	11, 12, 14, 15, 16				
		1	2, 6	L	51, 52, 54, 55, 56				
		1	3, 7	L	12, 15, 16				
7									RETAINER, Side Panel Vent Window
	5133 535AA	1	2, 6	L	11, 12, 14, 15, 16				
		1	2, 6	L	51, 52, 54, 55, 56				
		1	3, 7	L	12, 15, 16				
8									WEATHERSTRIP, Side Panel Vent
	5133 536AA	1	2, 6	L	11, 12, 14, 15, 16				
		1	2, 6	L	51, 52, 54, 55, 56				
		1	3, 7	L	12, 15, 16				

Refer to Model Legend Information Bookmark

AR = Use as required - = Non illustrated part # = New this model year

March 3, 2006

« RETURN TO GROUP INDEX

Door, Sliding Cargo Lock and Controls
Figure DVA-330

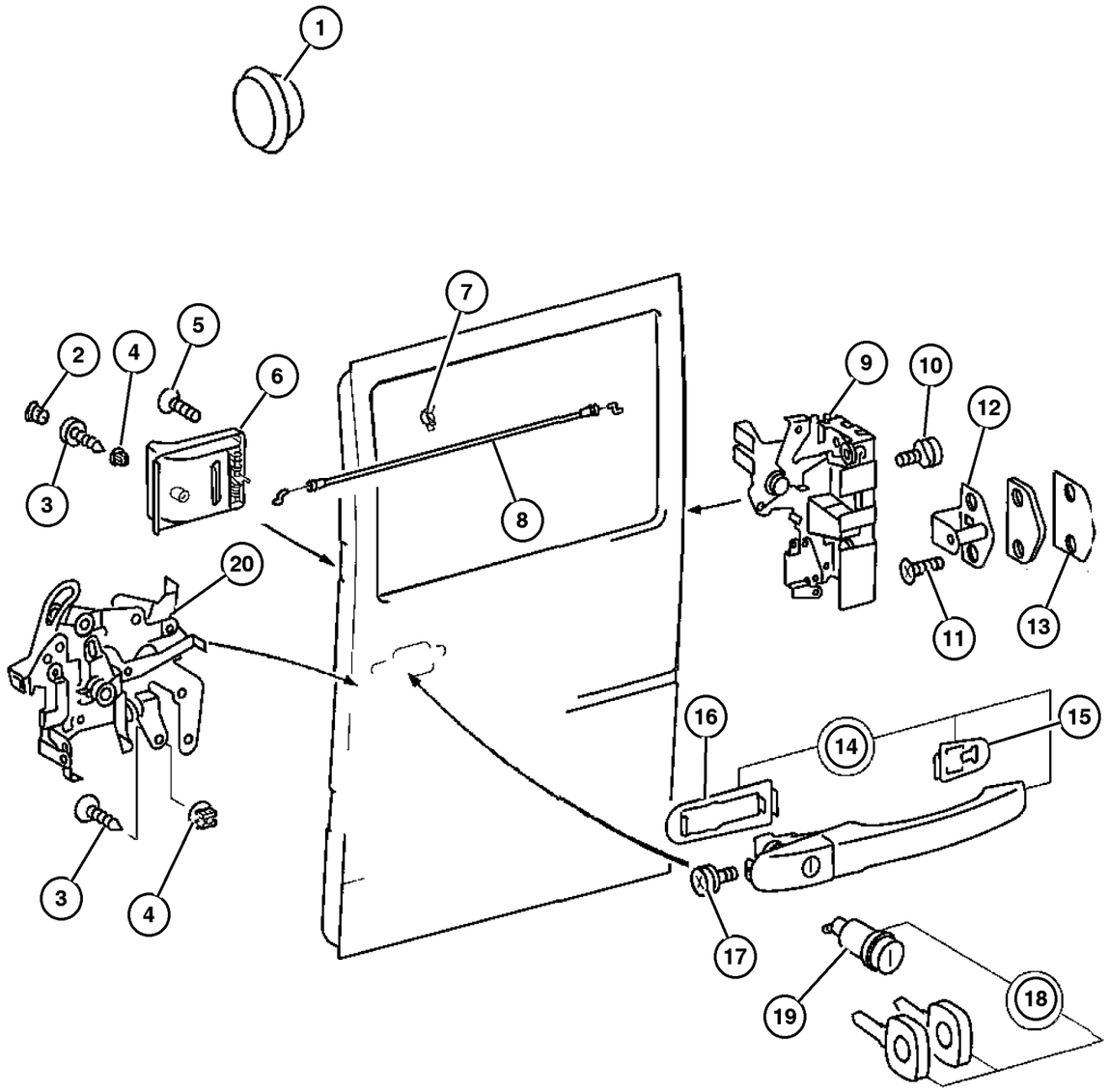

ITEM	PART NUMBER	QTY	LINE	SERIES	BODY	ENGINE	TRANS	TRIM	DESCRIPTION
1									PLUG, Door
	5125 508AA	1	2, 6	L	11, 12, 14, 15, 16				
		1	2, 6	L	51, 52, 54, 55, 56				
		1	3, 7	L	12, 15, 16				
2									CAP, Door Handle Screw Cover
	ZF54 DX9AA	1	2, 6	L	11, 12, 14, 15, 16				
		1	2, 6	L	51, 52, 54, 55, 56				
		1	3, 7	L	12, 15, 16				
3									SCREW
	5104 632AA	2	2, 6	L	11, 12, 14, 15, 16				
		2	2, 6	L	51, 52, 54, 55, 56				
		2	3, 7	L	12, 15, 16				
4									NUT
	5125 862AA	1	2, 6	L	11, 12, 14, 15, 16				
		1	2, 6	L	51, 52, 54, 55, 56				
		1	3, 7	L	12, 15, 16				
5									SCREW
	5104 679AA	1	2, 6	L	11, 12, 14, 15, 16				
		1	2, 6	L	51, 52, 54, 55, 56				
		4	3, 7	L	12, 15, 16				
6									HANDLE, Sliding Door Interior

Refer to Model Legend Information Bookmark

AR = Use as required - = Non illustrated part # = New this model year

March 3, 2006

« RETURN TO GROUP INDEX

»

Door, Sliding Cargo Lock and Controls
Figure DVA-330

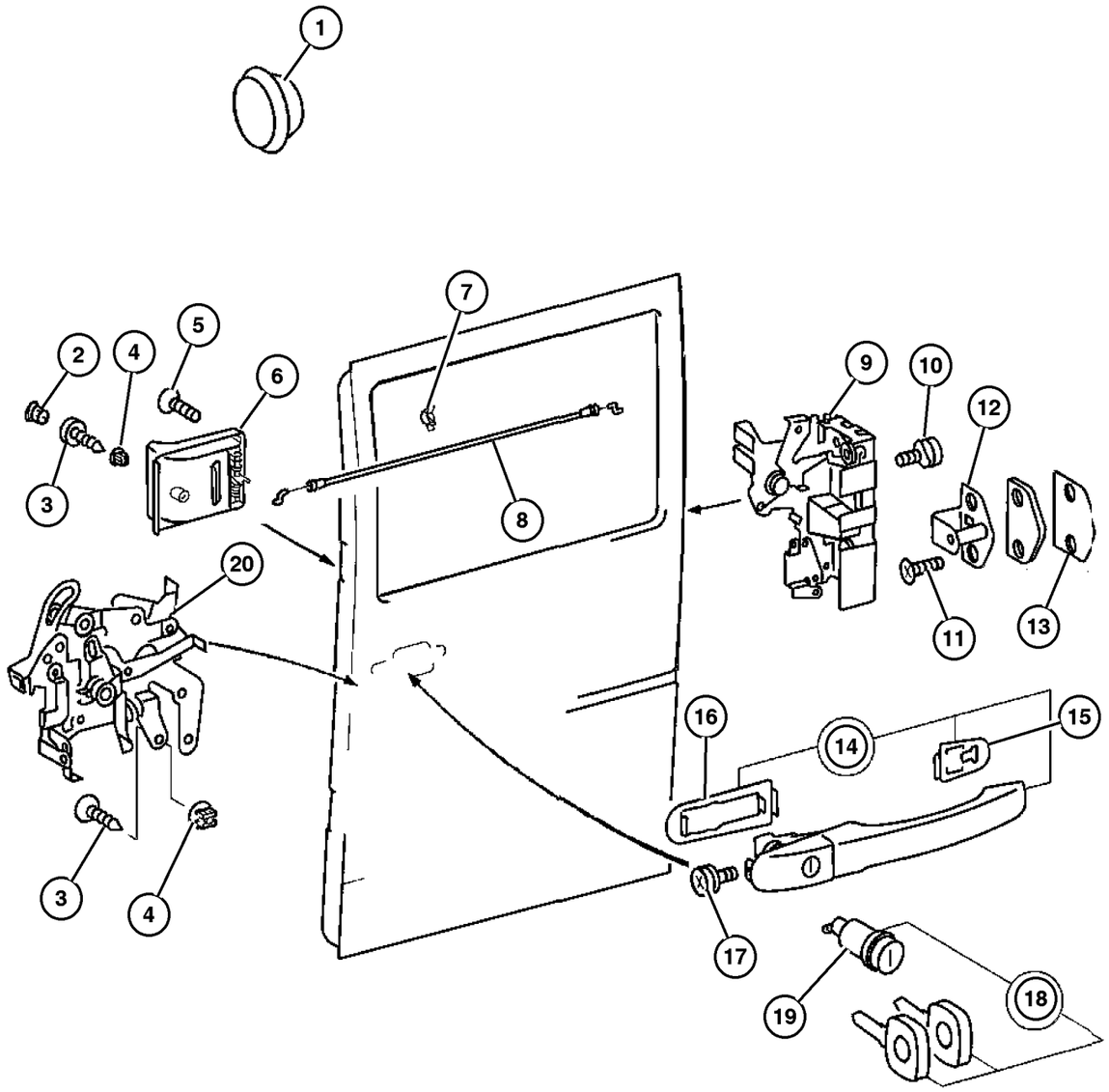

ITEM	PART NUMBER	QTY	LINE	SERIES	BODY	ENGINE	TRANS	TRIM	DESCRIPTION
	5132 049AA	1	2, 6	L	11, 12,				
					14, 15,				
					16				
		1	2, 6	L	51, 52,				
					54, 55,				
					56				
7									CLAMP
	5103 736AA	1	2, 6	L	11, 12,				
					14, 15,				
					16				
		1	2, 6	L	51, 52,				
					54, 55,				
					56				
		1	3, 7	L	12, 15,				
					16				
8									ROD, Inside Handle to Latch
	5103 587AA	1	2, 6	L	11, 12,				
					14, 15,				
					16				
		1	2, 6	L	51, 52,				
					54, 55,				
					56				
		1	3, 7	L	12, 15,				
					16				
9									LATCH, Cargo Door
	5104 357AA	1	2, 6	L	11, 12,				
					14, 15,				
					16				
		1	2, 6	L	51, 52,				
					54, 55,				
					56				
		1	3, 7	L	12, 15,				
					16				
10									SCREW
	5103 723AA	3	2, 6	L	01, 02,				
					06				
		3	2, 6	L	11, 12,				
					14, 15,				
					16				
		3	2, 6	L	51, 52,				
					54, 55,				
					56				
		3	3, 7	L	02, 06				
		3	3, 7	L	12, 15,				
					16				
11									SCREW

Refer to Model Legend Information Bookmark

AR = Use as required - = Non illustrated part # = New this model year

March 3, 2006

« RETURN TO GROUP INDEX

« »

Door, Sliding Cargo Lock and Controls
Figure DVA-330

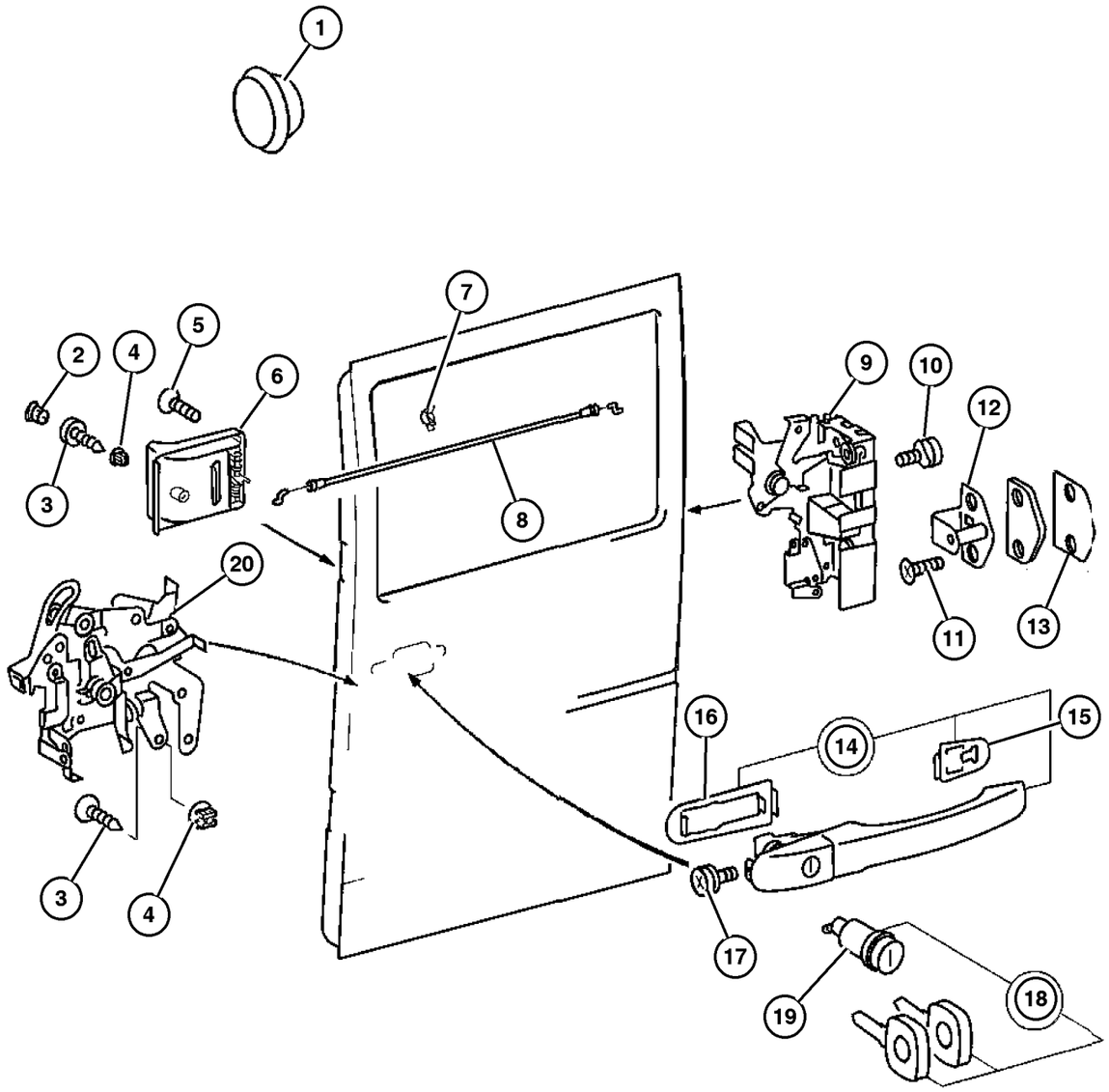

ITEM	PART NUMBER	QTY	LINE	SERIES	BODY	ENGINE	TRANS	TRIM	DESCRIPTION
	5103 715AA	2	2, 6	L	01, 02, 06				
		2	2, 6	L	11, 12, 14, 15, 16				
		2	2, 6	L	51, 52, 54, 55, 56				
		2	3, 7	L	02, 06				
		2	3, 7	L	12, 15, 16				
12									LATCH, Front Door
	5123 700AA	1	2, 6	L	01, 02, 06				
		1	2, 6	L	11, 12, 14, 15, 16				
		1	2, 6	L	51, 52, 54, 55, 56				
		1	3, 7	L	02, 06				
		1	3, 7	L	12, 15, 16				
13									PLATE, Striker
	5103 591AA	1	2, 6	L	11, 12, 14, 15, 16				
		1	2, 6	L	51, 52, 54, 55, 56				
		1	3, 7	L	12, 15, 16				
14									HANDLE, Cargo Door
	5104 415AA	1	2, 6	L	11, 12, 14, 15, 16				
		1	2, 6	L	51, 52, 54, 55, 56				
		1	3, 7	L	12, 15, 16				
15									PAD
	5103 672AA	1	2, 6	L	01, 02, 06				

Refer to Model Legend Information Bookmark

AR = Use as required - = Non illustrated part # = New this model year

March 3, 2006

« RETURN TO GROUP INDEX

Door, Sliding Cargo Lock and Controls
Figure DVA-330

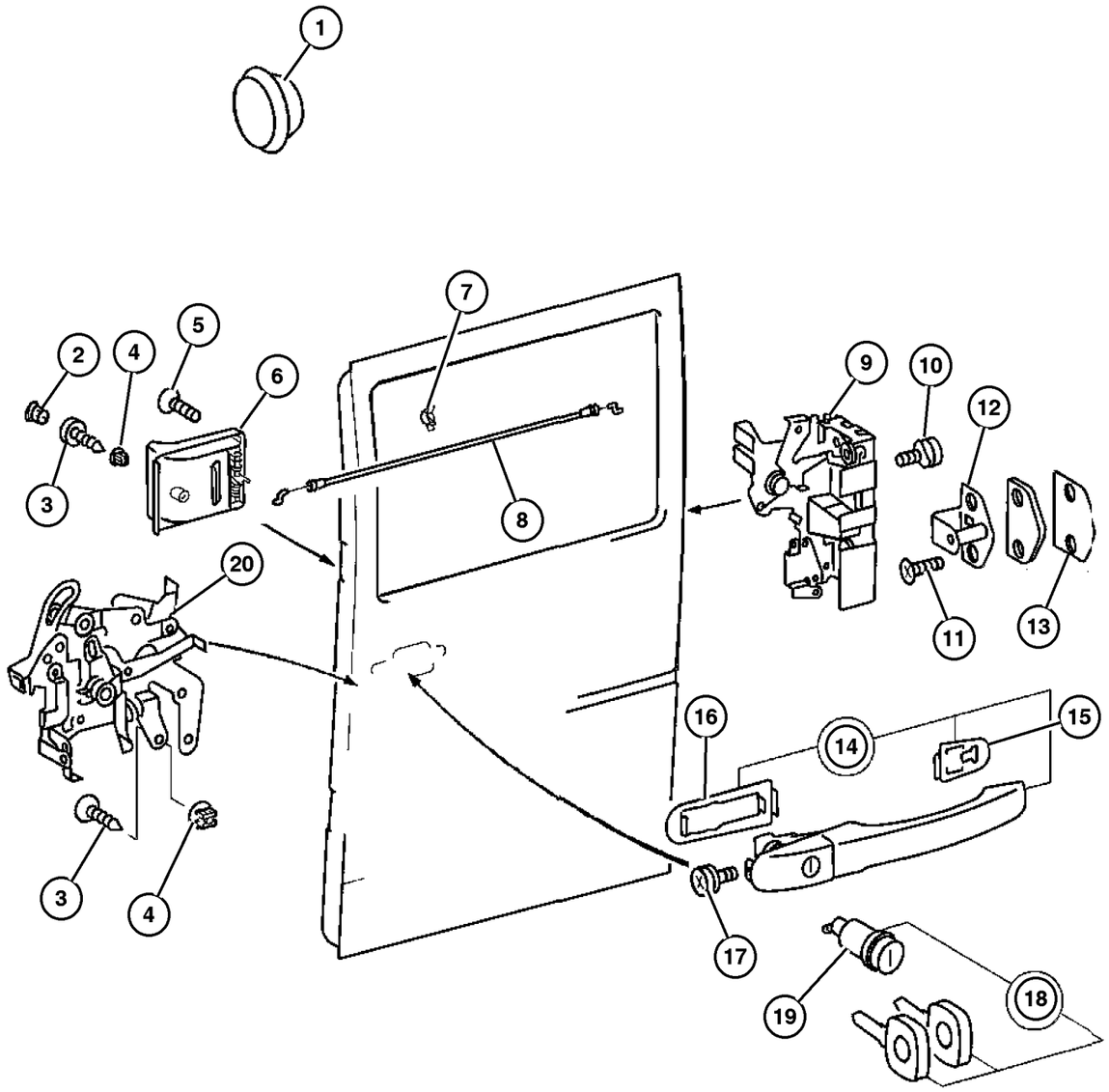

ITEM	PART NUMBER	QTY	LINE	SERIES	BODY	ENGINE	TRANS	TRIM	DESCRIPTION
		1	2, 6	L	11, 12, 14, 15, 16				
		1	2, 6	L	51, 52, 54, 55, 56				
		1	3, 7	L	02, 06				
		1	3, 7	L	12, 15, 16				
16									PAD
	5103 673AA	1	2, 6	L	01, 02, 06				
		1	2, 6	L	11, 12, 14, 15, 16				
		1	2, 6	L	51, 52, 54, 55, 56				
		1	3, 7	L	02, 06				
		1	3, 7	L	12, 15, 16				
17									SCREW, Front Door Handle
	5125 414AA	1	2, 6	L	01, 02, 06				
		1	2, 6	L	11, 12, 14, 15, 16				
		1	2, 6	L	51, 52, 54, 55, 56				
		1	3, 7	L	02, 06				
		1	3, 7	L	12, 15, 16				
18									CYLINDER, Door Lock
	5114 364AA	1	2, 6	L	11, 12, 14, 15, 16				
		1	2, 6	L	51, 52, 54, 55, 56				
		1	2, 6	L	01, 02, 06				
		1	3, 7	L	02, 06				
		1	3, 7	L	12, 15, 16				
19									CYLINDER, Door Lock

Refer to Model Legend Information Bookmark

AR = Use as required - = Non illustrated part # = New this model year

March 3, 2006

« RETURN TO GROUP INDEX

Door, Sliding Cargo Lock and Controls
Figure DVA-330

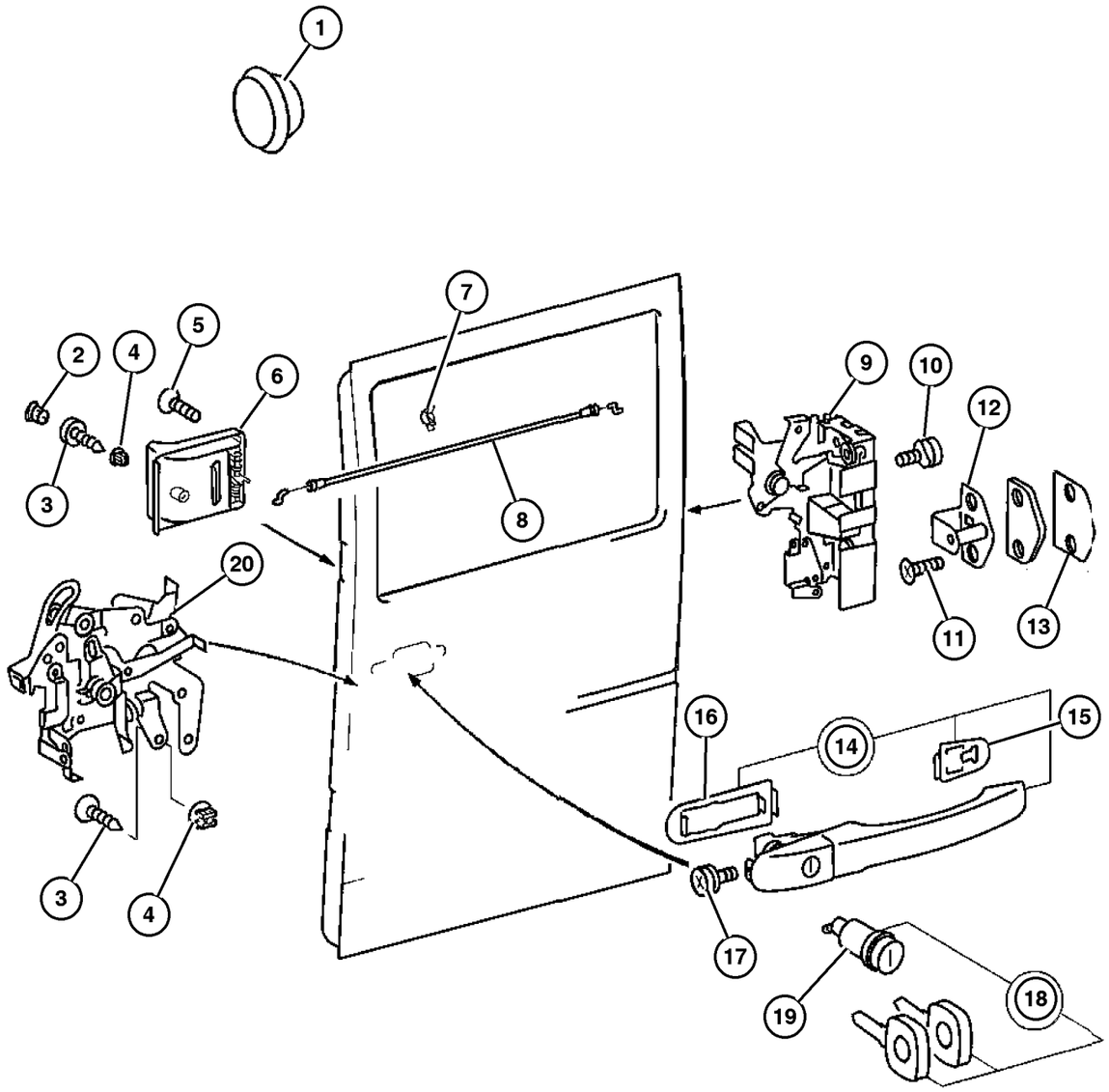

ITEM	PART NUMBER	QTY	LINE	SERIES	BODY	ENGINE	TRANS	TRIM	DESCRIPTION
	5114 364AA	1	2, 6	L	11, 12, 14, 15, 16				
		1	2, 6	L	51, 52, 54, 55, 56				
		1	2, 6	L	01, 02, 06				
		1	3, 7	L	02, 06				
		1	3, 7	L	12, 15, 16				
20									LOCK, Side Cargo Door
	5104 359AA	1	2, 6	L	11, 12, 14, 15, 16				Right
		1	3, 7	L	12, 15, 16				Right
	5123 814AA	1	2, 6	L	11, 12, 14, 15, 16				Left
		1	3, 7	L	12, 15, 16				Left

Refer to Model Legend Information Bookmark

AR = Use as required - = Non illustrated part # = New this model year

March 3, 2006

« RETURN TO GROUP INDEX

Door, Cargo Shell and Hinges
Figure DVA-410

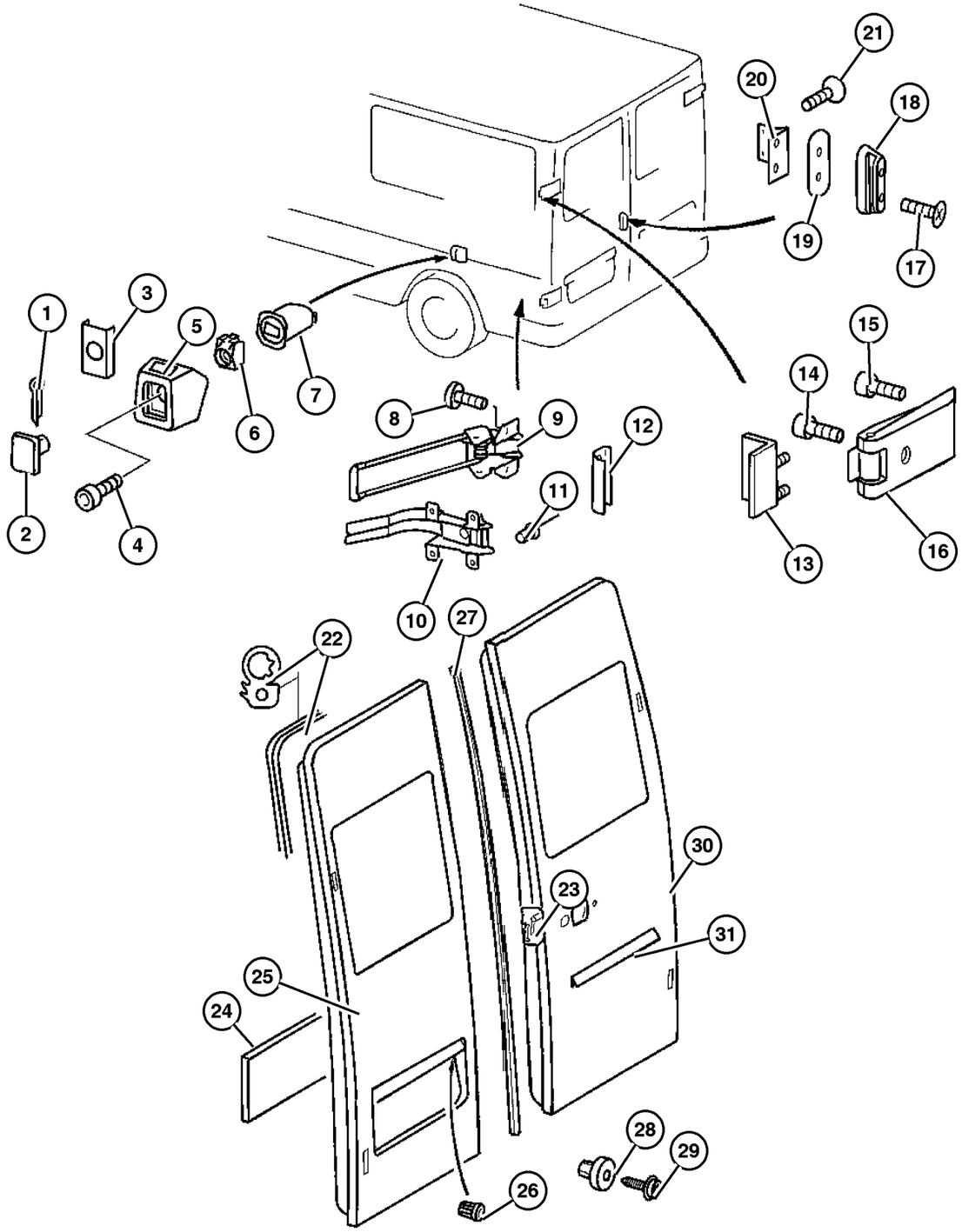

ITEM	PART NUMBER	QTY	LINE	SERIES	BODY	ENGINE	TRANS	TRIM	DESCRIPTION
1									PIN, Cotter
	5104 611AA	2	2, 6	L	11, 12, 14, 15, 16				
		2	2, 6	L	51, 52, 54, 55, 56				
		2	3, 7	L	12, 15, 16				
2									MAGNET
	5104 423AA	1	2, 6	L	11, 12, 14, 15, 16				
		1	2, 6	L	51, 52, 54, 55, 56				
		1	3, 7	L	12, 15, 16				
3									PLATE, Support
	5104 433AA	1	2, 6	L	11, 12, 14, 15, 16				
		1	2, 6	L	51, 52, 54, 55, 56				
		1	3, 7	L	12, 15, 16				
4									SCREW
	5103 719AA	1	2, 6	L	11, 12, 14, 15, 16				
		1	2, 6	L	51, 52, 54, 55, 56				
		1	3, 7	L	12, 15, 16				
5									BUMPER, Door
	5104 369AA	1	2, 6	L	11, 12, 14, 15, 16				
		1	2, 6	L	51, 52, 54, 55, 56				
		1	3, 7	L	12, 15, 16				
6									NUT, Snap In

Refer to Model Legend Information Bookmark

AR = Use as required - = Non illustrated part # = New this model year

March 3, 2006

« RETURN TO GROUP INDEX

»

Door, Cargo Shell and Hinges
Figure DVA-410

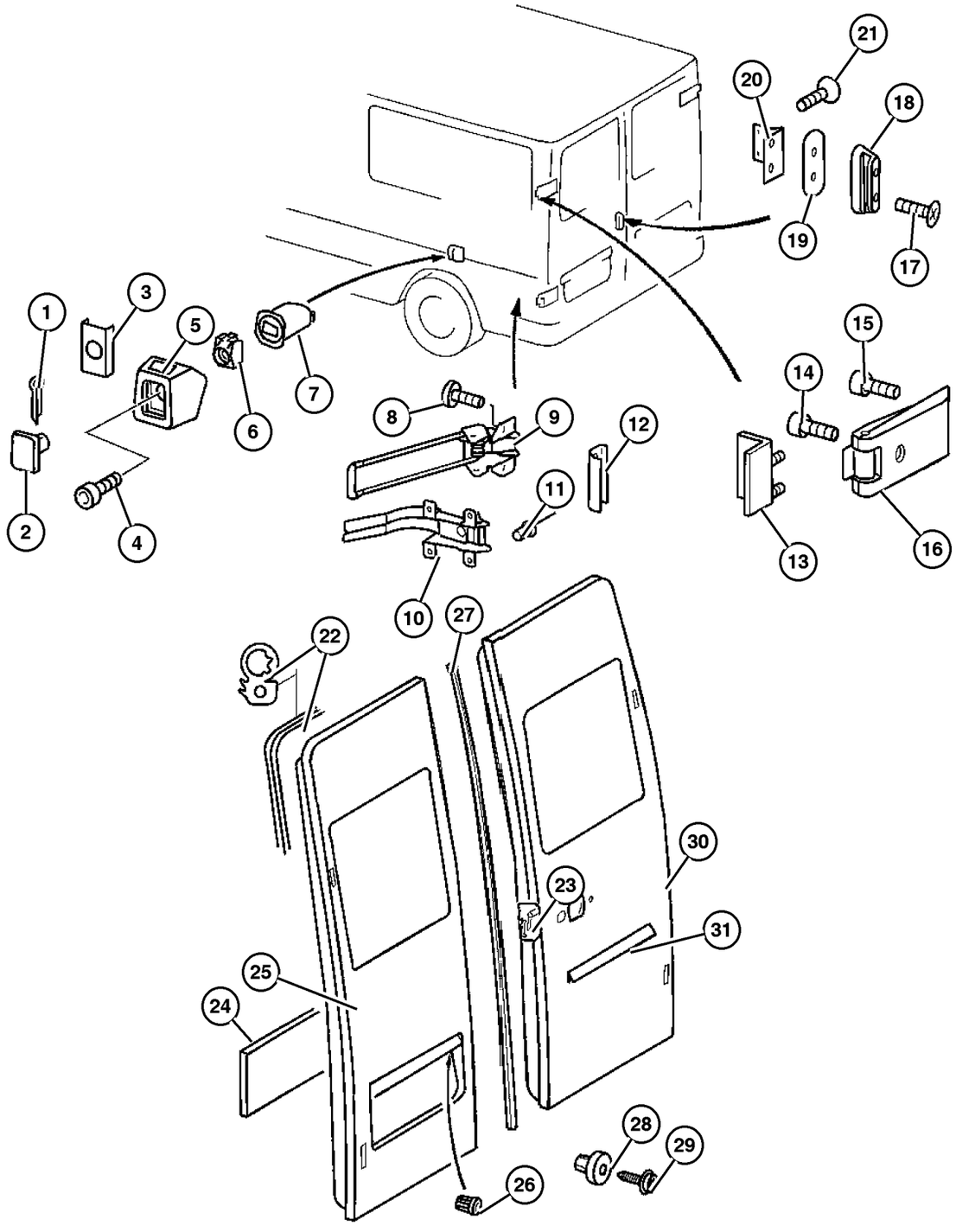

ITEM	PART NUMBER	QTY	LINE	SERIES	BODY	ENGINE	TRANS	TRIM	DESCRIPTION
	5103 840AA	1	2, 6	L	11, 12, 14, 15, 16				
		1	2, 6	L	51, 52, 54, 55, 56				
		1	3, 7	L	12, 15, 16				
7									REINFORCEMENT
	5104 173AA	1	2, 6	L	11, 12, 14, 15				
		1	2, 6	L	51, 52, 54, 55				
		1	3, 7	L	12, 15				
8									SCREW, (NOT SERVICED) (Not Serviced)
9									CHECK, Rear Door
	5104 414AA	1	2, 6	L	11, 12, 14, 15, 16				
		1	2, 6	L	51, 52, 54, 55, 56				
		1	3, 7	L	12, 15, 16				
10									BRACKET, Door Inside
	5104 413AA	1	2, 6	L	11, 12, 14, 15, 16				
		1	2, 6	L	51, 52, 54, 55, 56				
		1	3, 7	L	12, 15, 16				
11									RIVET
	5103 838AA	4	2, 6	L	01, 02, 06				
		4	2, 6	L	11, 12, 14, 15, 16				
		4	2, 6	L	51, 52, 54, 55, 56				
		4	3, 7	L	02, 06				

Refer to Model Legend Information Bookmark

AR = Use as required - = Non illustrated part # = New this model year

March 3, 2006

« RETURN TO GROUP INDEX

Door, Cargo Shell and Hinges
Figure DVA-410

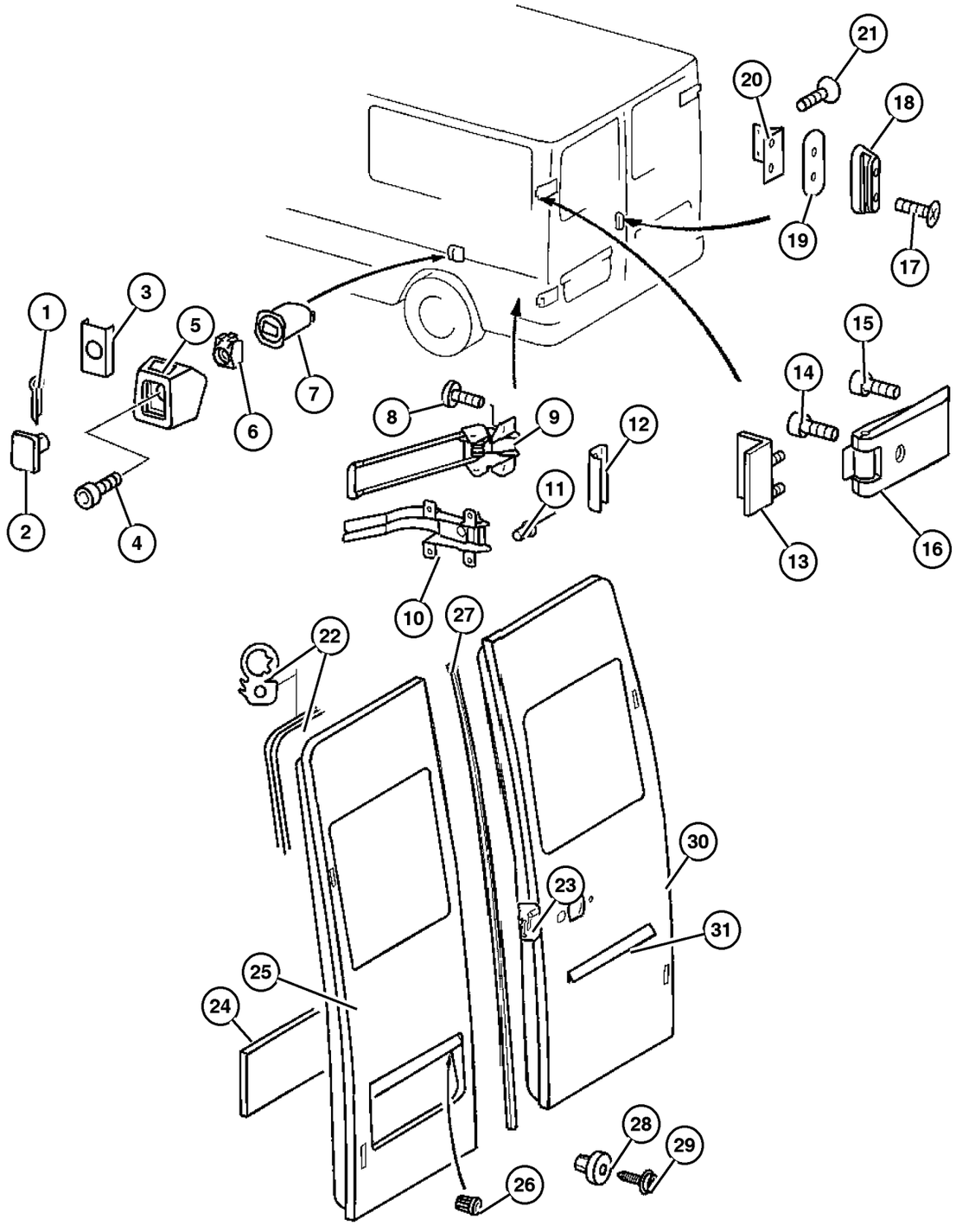

ITEM	PART NUMBER	QTY	LINE	SERIES	BODY	ENGINE	TRANS	TRIM	DESCRIPTION
		4	3, 7	L	12, 15, 16				
12									BRACKET, Cargo Door Hinge
	5104 430AA	1	2, 6	L	11, 12, 14, 15, 16				
		1	2, 6	L	51, 52, 54, 55, 56				
		1	3, 7	L	12, 15, 16				
13									STOPPER, Cargo Door
	5104 385AA	2	2, 6	L	11, 12, 14, 15, 16				
		2	2, 6	L	51, 52, 54, 55, 56				
		2	3, 7	L	12, 15, 16				
14									BOLT, Torx
	5125 420AA	1	2, 6	L	01, 02, 06				
		1	2, 6	L	11, 12, 14, 15, 16				
		1	2, 6	L	51, 52, 54, 55, 56				
		1	3, 7	L	02, 06				
		1	3, 7	L	12, 15, 16				
15	5073 721AA	1	2, 3, 6, 7	L					SCREW
16									HINGE, Rear Door
	5104 378AA	2	2, 6	L	11, 12, 14, 15, 16				
		2	2, 6	L	51, 52, 54, 55, 56				
		2	3, 7	L	12, 15, 16				
17									SCREW

Refer to Model Legend Information Bookmark

AR = Use as required - = Non illustrated part # = New this model year

March 3, 2006

Door, Cargo Shell and Hinges
Figure DVA-410

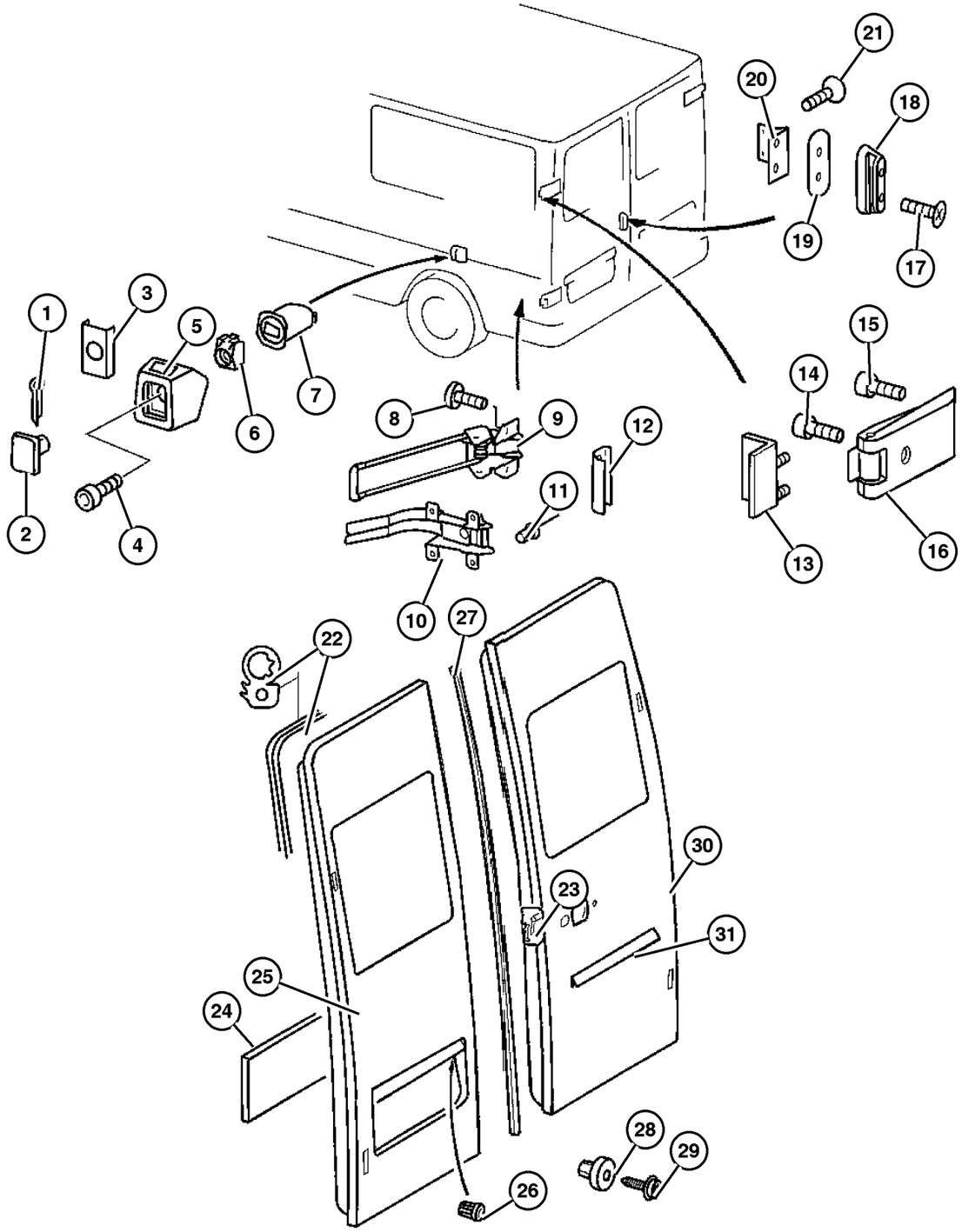

ITEM	PART NUMBER	QTY	LINE	SERIES	BODY	ENGINE	TRANS	TRIM	DESCRIPTION
	5104 635AA	2	2, 6	L	11, 12, 14, 15, 16				
		2	2, 6	L	51, 52, 54, 55, 56				
		2	3, 7	L	12, 15, 16				
	5104 636AA	2	2, 6	L	01, 02, 06				
		2	3, 7	L	02, 06				
18									BUMPER, Door
	5104 370AA	1	2, 6	L	11, 12, 14, 15, 16				
		1	2, 6	L	51, 52, 54, 55, 56				
		1	3, 7	L	12, 15, 16				
19									GASKET, Bumper Bracket
	5104 432AA	1	2, 6	L	11, 12, 14, 15, 16				
		1	2, 6	L	51, 52, 54, 55, 56				
		1	3, 7	L	12, 15, 16				
20									BRACKET, Hinge Reinforcement
	5123 934AA	1	2, 6	L	11, 12, 14, 15, 16				
		1	2, 6	L	51, 52, 54, 55, 56				
		1	3, 7	L	12, 15, 16				
21									SCREW
	5133 932AA	4	2, 6	L	11, 12, 14, 15, 16				
		4	2, 6	L	51, 52, 54, 55, 56				

Refer to Model Legend Information Bookmark

AR = Use as required - = Non illustrated part # = New this model year

March 3, 2006

« RETURN TO GROUP INDEX

Door, Cargo Shell and Hinges
Figure DVA-410

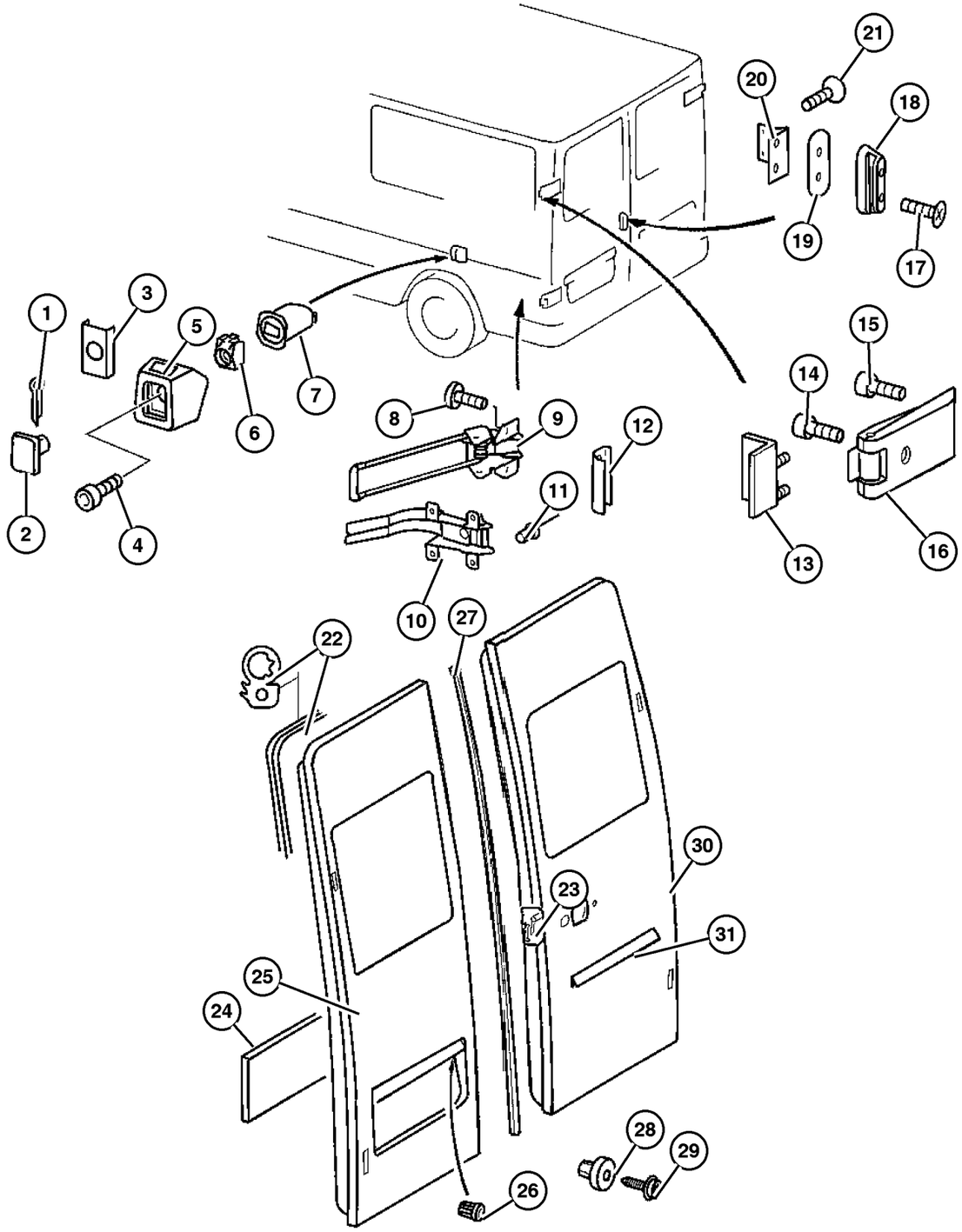

ITEM	PART NUMBER	QTY	LINE	SERIES	BODY	ENGINE	TRANS	TRIM	DESCRIPTION
		4	3, 7	L	12, 15, 16				
22									WEATHERSTRIP, Cargo Door
	5104 274AA	1	2, 6	L	14, 15, 16				
		1	2, 6	L	54, 55, 56				
		1	3, 7	L	15, 16				
23									FILM, (NOT SERVICED) (Not Serviced)
24									SILENCER, Door
	5122 518AA	2	2, 6	L	11, 12, 14, 15, 16				
		2	2, 6	L	51, 52, 54, 55, 56				
		2	3, 7	L	12, 15, 16				
25									DOOR, Rear Cargo
	5123 905AA	1	2, 6	L	11, 12				Left Hand
		1	3, 7	L	12				Left Hand
	5123 907AA	1	2, 6	L	11, 12				Right Hand
		1	3, 7	L	12				Right Hand
	5123 909AA	1	2, 6	L	14, 15, 16				[MWJ-GL8], Left Hand
		1	3, 7	L	15, 16				[MWJ-GL8], Left Hand
	5123 913AA	1	2, 6	L	11, 12				[GEM], Left Hand
		1	3, 7	L	12				[GEM], Left Hand
	5123 917AA	1	2, 6	L	14, 15, 16				[MWJ+GEM], Left Hand
		1	2, 6	L	54, 55, 56				[MWJ-GL8], Left Hand
		1	3, 7	L	15, 16				[MWJ+GEM], Left Hand
26									NUT, Push In, (NOT SERVICED) (Not Serviced)
27									WEATHERSTRIP, Cargo Door
	5104 375AA	1	2, 6	L	14, 15, 16				
		1	2, 6	L	54, 55, 56				
		1	3, 7	L	15, 16				
28									NUTSERT, Rivet, (NOT SERVICED) (Not Serviced)
29									SCREW

Refer to Model Legend Information Bookmark

AR = Use as required - = Non illustrated part # = New this model year

March 3, 2006

« RETURN TO GROUP INDEX

Door, Cargo Shell and Hinges
Figure DVA-410

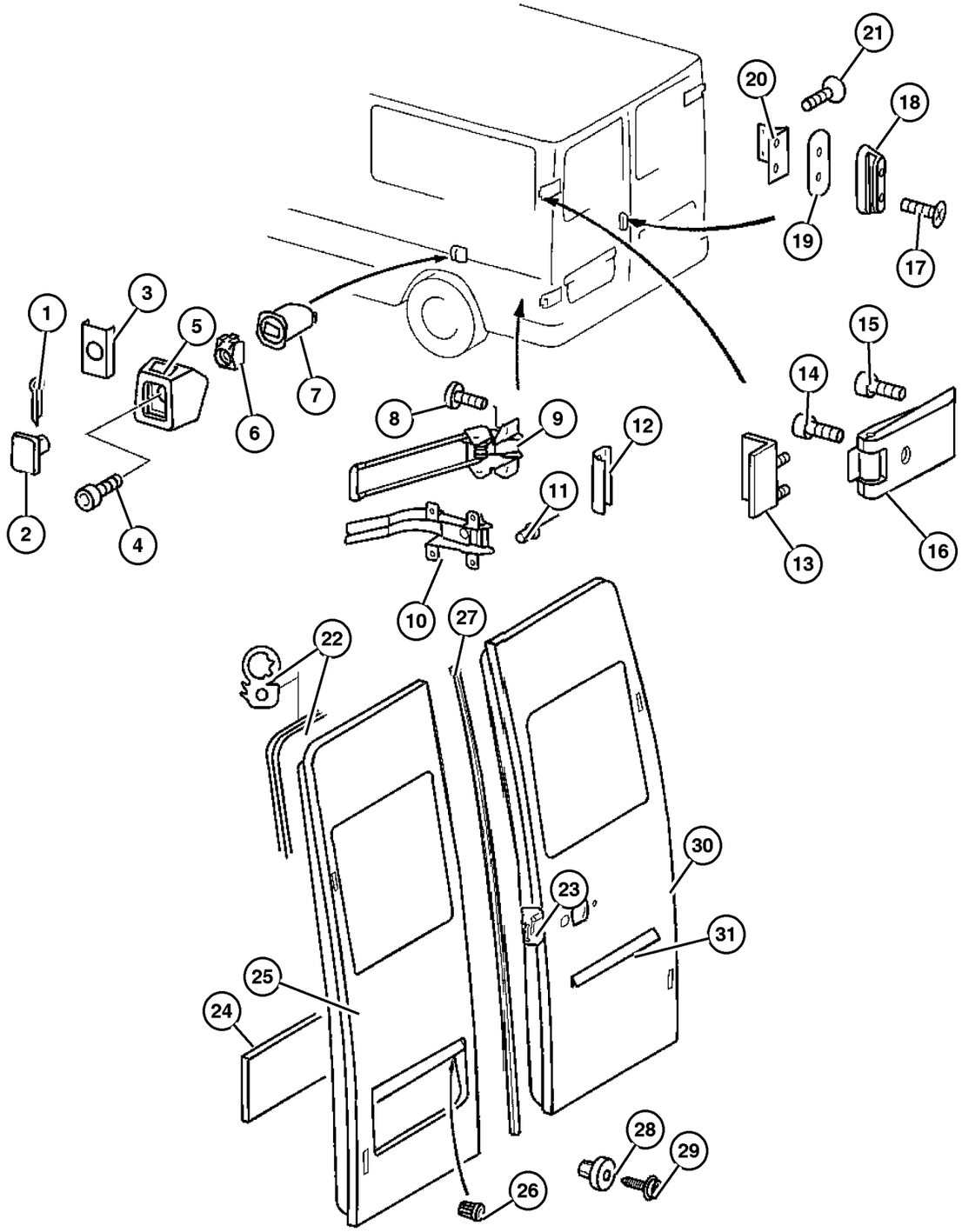

ITEM	PART NUMBER	QTY	LINE	SERIES	BODY	ENGINE	TRANS	TRIM	DESCRIPTION
	5133 931AA	4	2, 6	L	11, 12, 14, 15, 16				
		4	2, 6	L	51, 52, 54, 55, 56				
		4	3, 7	L	12, 15, 16				
30									DOOR, Rear Cargo
	5123 907AA	1	2, 6	L	11, 12				Right Hand
		1	3, 7	L	12				Right Hand
	5123 911AA	1	2, 6	L	14, 15, 16				[MWJ-GL8], Right Hand
		1	3, 7	L	15, 16				[MWJ-GL8], Right Hand
	5123 915AA	1	2, 6	L	11, 12				[GEM], Right Hand
		1	3, 7	L	12				[GEM], Right Hand
	5123 919AA	1	2, 6	L	14, 15, 16				[MWJ+GEM], Right Hand
		1	2, 6	L	54, 55, 56				[MWJ-GL8], Right Hand
		1	3, 7	L	15, 16				[MWJ+GEM], Right Hand
31									NAMEPLATE, Rear Door
	5104 454AA	1	2, 6	L	01, 02, 06				
		1	2, 6	L	11, 12, 14, 15, 16				
		1	2, 6	L	51, 52, 54, 55, 56				
		1	3, 7	L	02, 06				
		1	3, 7	L	12, 15, 16				

Refer to Model Legend Information Bookmark

AR = Use as required - = Non illustrated part # = New this model year

March 3, 2006

« RETURN TO GROUP INDEX

Door, Cargo Glass and Hardware
Figure DVA-420

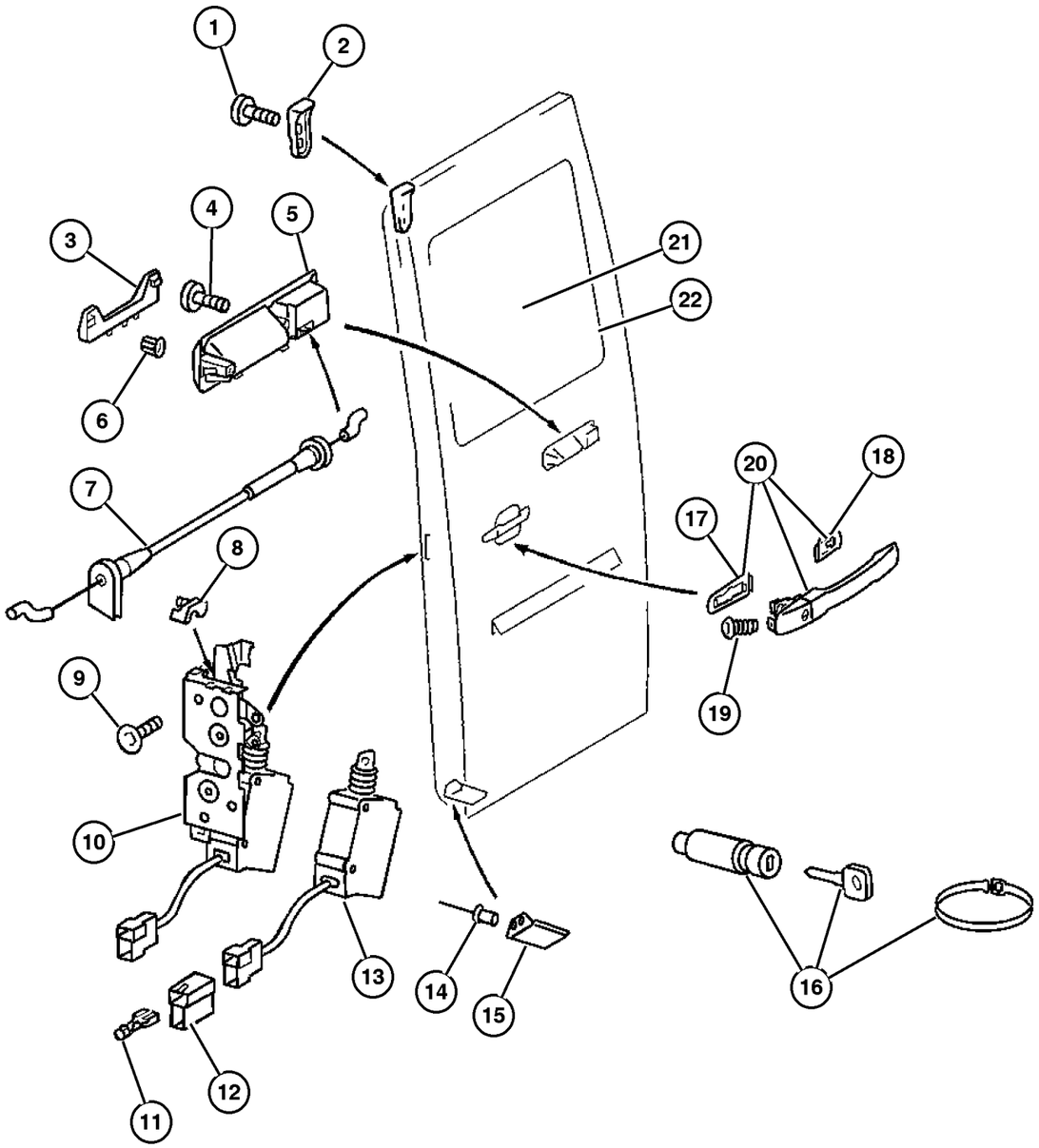

ITEM	PART NUMBER	QTY	LINE	SERIES	BODY	ENGINE	TRANS	TRIM	DESCRIPTION
1									SCREW
	6104 142AA	2	2, 6	L	01, 02, 06				
		2	2, 6	L	11, 12, 14, 15, 16				
		2	2, 6	L	51, 52, 54, 55, 56				
		2	3, 7	L	02, 06				
		2	3, 7	L	12, 15, 16				
2									SPACER, Door Lock Striker
	5123 997AA	1	2, 6	L	11, 12, 14, 15, 16				
		1	2, 6	L	51, 52, 54, 55, 56				
		1	3, 7	L	12, 15, 16				
3									COVER, Handle
	1AT60 BD1AA	1	2, 6	L	11, 12, 14, 15, 16				
		1	2, 6	L	51, 52, 54, 55, 56				
		1	3, 7	L	12, 15, 16				
4									SCREW
	6104 142AA	2	2, 6	L	01, 02, 06				
		2	2, 6	L	11, 12, 14, 15, 16				
		2	2, 6	L	51, 52, 54, 55, 56				
		2	3, 7	L	02, 06				
		2	3, 7	L	12, 15, 16				
5									HANDLE, Rear Door Interior

Refer to Model Legend Information Bookmark

AR = Use as required - = Non illustrated part # = New this model year

March 3, 2006

« RETURN TO GROUP INDEX

»

Door, Cargo Glass and Hardware
Figure DVA-420

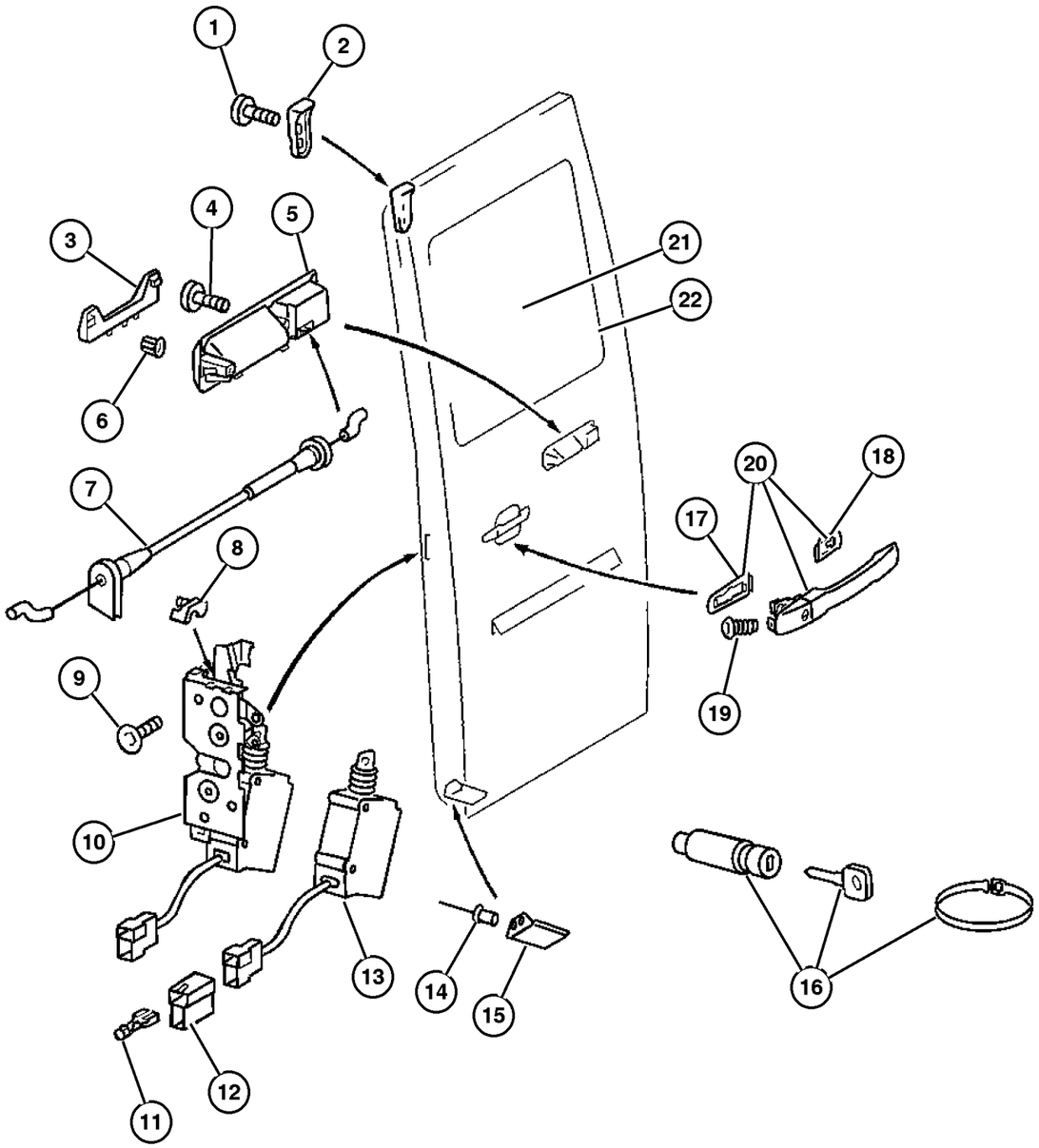

ITEM	PART NUMBER	QTY	LINE	SERIES	BODY	ENGINE	TRANS	TRIM	DESCRIPTION
	5132 053AA	1	2, 6	L	11, 12, 14, 15, 16				
		1	2, 6	L	51, 52, 54, 55, 56				
6									NUT
	6104 884AA	2	2, 6	L	11, 12, 14, 15, 16				
		2	2, 6	L	51, 52, 54, 55, 56				
		2	2, 6	L	01, 02, 06				
		2	3, 7	L	02, 06				
		2	3, 7	L	12, 15, 16				
7									CABLE
	5104 416AA	1	2, 6	L	11, 12, 14, 15, 16				
		1	2, 6	L	51, 52, 54, 55, 56				
		1	3, 7	L	12, 15, 16				
8									CONNECTOR, Solenoid
	5103 674AA	1	2, 6	L	01, 02, 06				
		1	2, 6	L	11, 12, 14, 15, 16				
		1	2, 6	L	51, 52, 54, 55, 56				
		1	3, 7	L	02, 06				
		1	3, 7	L	12, 15, 16				
9									SCREW
	5103 723AA	3	2, 6	L	01, 02, 06				
		3	2, 6	L	11, 12, 14, 15, 16				

Refer to Model Legend Information Bookmark

AR = Use as required - = Non illustrated part # = New this model year

March 3, 2006

« RETURN TO GROUP INDEX

Door, Cargo Glass and Hardware
Figure DVA-420

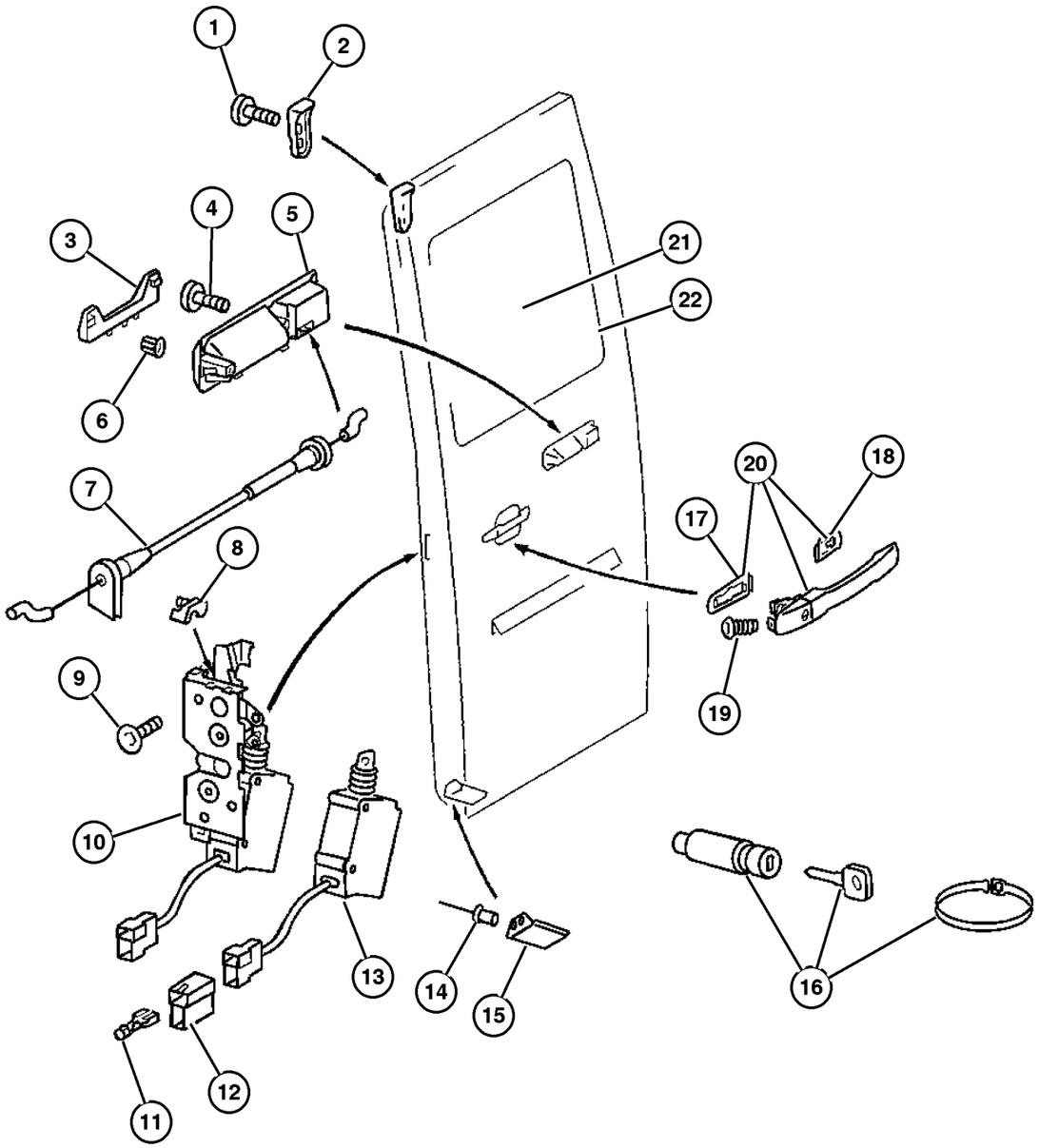

ITEM	PART NUMBER	QTY	LINE	SERIES	BODY	ENGINE	TRANS	TRIM	DESCRIPTION
		3	2, 6	L	51, 52, 54, 55, 56				
		3	3, 7	L	02, 06				
		3	3, 7	L	12, 15, 16				
10	5131 997AA	1	2, 6	L	11, 12, 14, 15, 16				LATCH, Rear Door
		1	2, 6	L	51, 52, 54, 55, 56				
11	5114 451AA	99	2, 6	L	01, 02, 06				TERMINAL, Female
		99	2, 6	L	11, 12, 14, 15, 16				
		99	2, 6	L	51, 52, 54, 55, 56				
		99	3, 7	L	02, 06				
		99	3, 7	L	12, 15, 16				
12	5103 754AA	1	2, 6	L	01, 02, 06				INSULATOR, 2 Way Female
		1	2, 6	L	11, 12, 14, 15, 16				
		1	2, 6	L	51, 52, 54, 55, 56				
		2	3, 7	L	02, 06				
		2	3, 7	L	12, 15, 16				
13	5133 998AA	1	2, 6	L	11, 12, 14, 15, 16				ACTUATOR, Power Door Lock
		1	2, 6	L	51, 52, 54, 55, 56				

Refer to Model Legend Information Bookmark

AR = Use as required - = Non illustrated part # = New this model year

March 3, 2006

Door, Cargo Glass and Hardware
Figure DVA-420

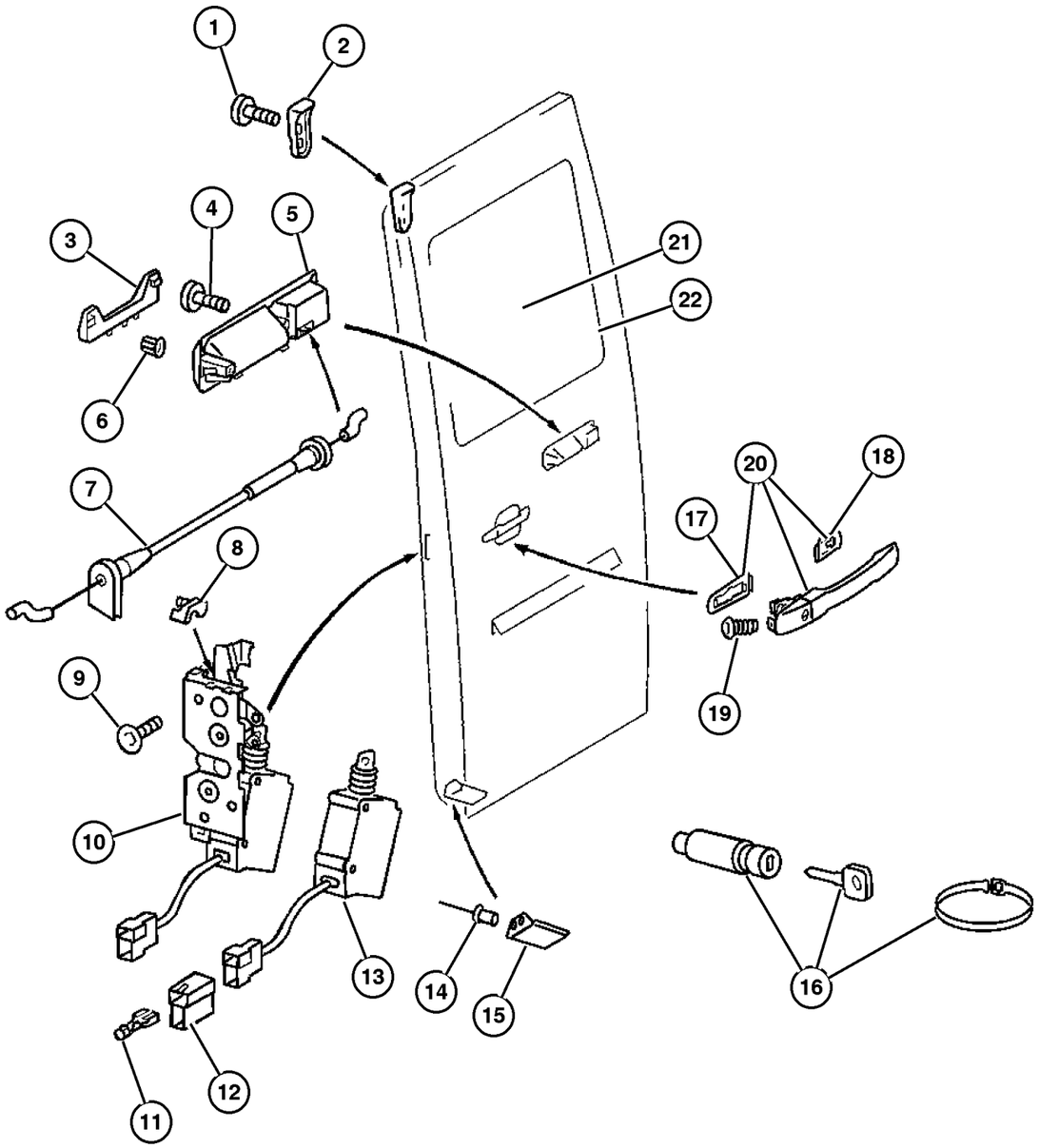

ITEM	PART NUMBER	QTY	LINE	SERIES	BODY	ENGINE	TRANS	TRIM	DESCRIPTION
		1	3, 7	L	12, 15, 16				
14									RIVET
	5125 819AA	2	2, 6	L	11, 12, 14, 15, 16				
		2	2, 6	L	51, 52, 54, 55, 56				
		2	3, 7	L	12, 15, 16				
15									SPACER, Door Lock Striker
	5123 999AA	1	2, 6	L	11, 12, 14, 15, 16				
		1	2, 6	L	51, 52, 54, 55, 56				
		1	3, 7	L	12, 15, 16				
16									CYLINDER, Door Lock
	5114 364AA	1	2, 6	L	11, 12, 14, 15, 16				
		1	2, 6	L	51, 52, 54, 55, 56				
		1	2, 6	L	01, 02, 06				
		1	3, 7	L	02, 06				
		1	3, 7	L	12, 15, 16				
17									PAD
	5103 673AA	1	2, 6	L	01, 02, 06				
		1	2, 6	L	11, 12, 14, 15, 16				
		1	2, 6	L	51, 52, 54, 55, 56				
		1	3, 7	L	02, 06				
		1	3, 7	L	12, 15, 16				
18									PAD

Refer to Model Legend Information Bookmark

AR = Use as required - = Non illustrated part # = New this model year

March 3, 2006

« RETURN TO GROUP INDEX

Door, Cargo Glass and Hardware
Figure DVA-420

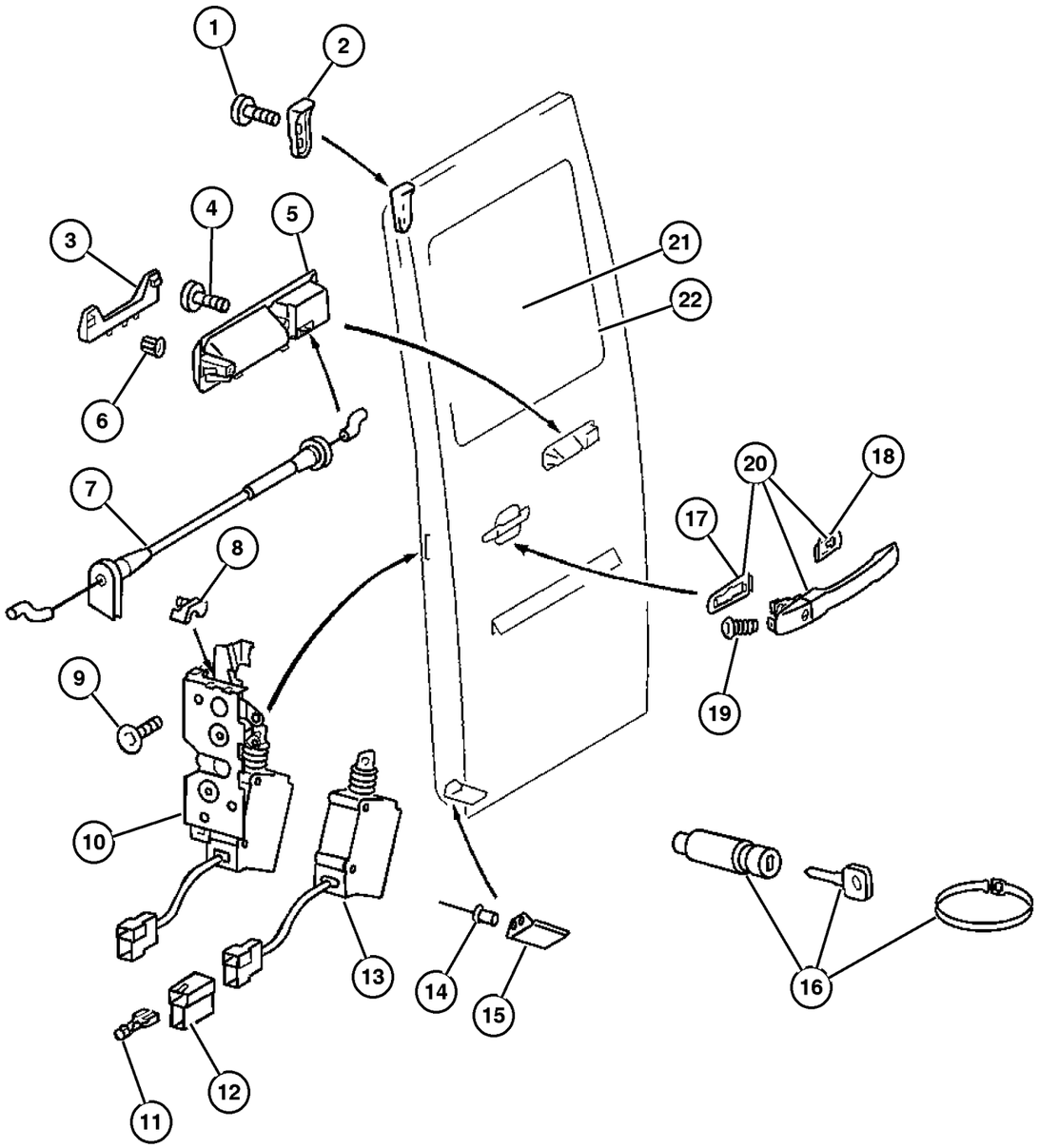

ITEM	PART NUMBER	QTY	LINE	SERIES	BODY	ENGINE	TRANS	TRIM	DESCRIPTION
	5103 672AA	1	2, 6	L	01, 02, 06				
		1	2, 6	L	11, 12, 14, 15, 16				
		1	2, 6	L	51, 52, 54, 55, 56				
		1	3, 7	L	02, 06				
		1	3, 7	L	12, 15, 16				
19									SCREW, Front Door Handle
	5125 414AA	1	2, 6	L	01, 02, 06				
		1	2, 6	L	11, 12, 14, 15, 16				
		1	2, 6	L	51, 52, 54, 55, 56				
		1	3, 7	L	02, 06				
		1	3, 7	L	12, 15, 16				
20									HANDLE, Front Door
	5124 094AA	1	2, 6	L	01, 02, 06				
		1	2, 6	L	11, 12, 14, 15, 16				
		1	2, 6	L	51, 52, 54, 55, 56				
		1	3, 7	L	02, 06				
		1	3, 7	L	12, 15, 16				
21									GLASS, Cargo Door
	5124 006AA	1	2, 6	L	11, 12, 14, 15, 16				Solar, Left
		1	2, 6	L	51, 52, 54, 55, 56				Solar, Left
		1	3, 7	L	12, 15, 16				Solar, Left

Refer to Model Legend Information Bookmark

AR = Use as required - = Non illustrated part # = New this model year

March 3, 2006

« RETURN TO GROUP INDEX

Door, Cargo Glass and Hardware
Figure DVA-420

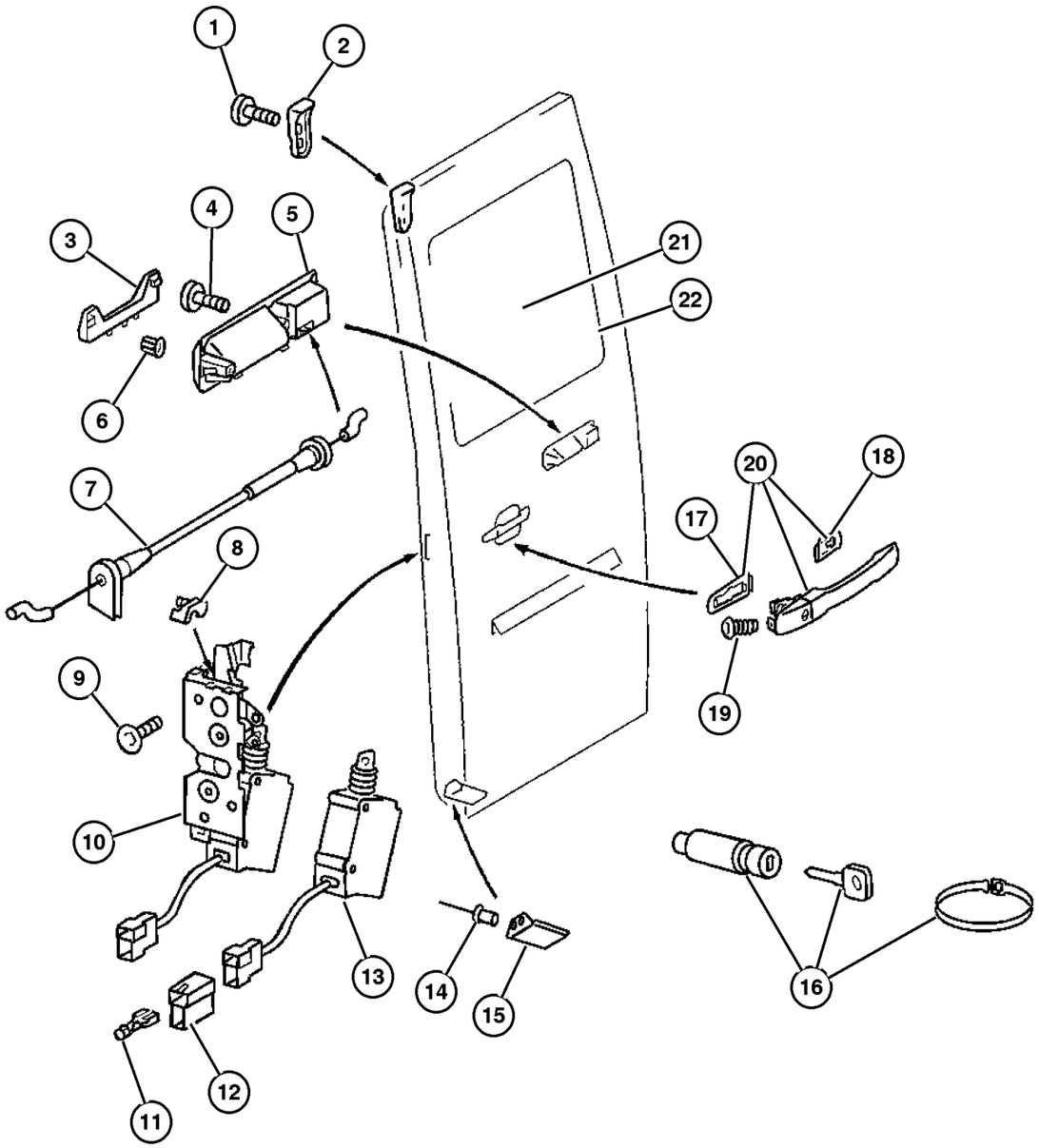

ITEM	PART NUMBER	QTY	LINE	SERIES	BODY	ENGINE	TRANS	TRIM	DESCRIPTION
	5124 008AA	1	2, 6	L	11, 12, 14, 15, 16				Solar, Right
		1	2, 6	L	51, 52, 54, 55, 56				Solar, Right
		1	3, 7	L	12, 15, 16				Solar, Right
	5124 014AA	1	2, 6	L	11, 12, 14, 15, 16				Solar, Left Hand
		1	2, 6	L	51, 52, 54, 55, 56				Solar, Left Hand
		1	3, 7	L	12, 15, 16				Solar, Left Hand
	5124 016AA	1	2, 6	L	11, 12, 14, 15, 16				Solar, Right Hand
		1	2, 6	L	51, 52, 54, 55, 56				Solar, Right Hand
		1	3, 7	L	12, 15, 16				Solar, Right Hand
	5134 318AA	1	2, 6	L	11, 12, 14, 15, 16				Privacy,Heated, Left Hand
		1	2, 6	L	51, 52, 54, 55, 56				Privacy,Heated, Left Hand
		1	3, 7	L	12, 15, 16				Privacy,Heated, Left Hand
	5134 319AA	1	2, 6	L	11, 12, 14, 15, 16				Privacy,Non-Heated, Left Hand
		1	2, 6	L	51, 52, 54, 55, 56				Privacy,Non-Heated, Left Hand
		1	3, 7	L	12, 15, 16				Privacy,Non-Heated, Left Hand
	5134 324AA	1	2, 6	L	11, 12, 14, 15, 16				Privacy,Heated, Right Hand

Refer to Model Legend Information Bookmark

AR = Use as required - = Non illustrated part # = New this model year

March 3, 2006

« RETURN TO GROUP INDEX

Door, Cargo Glass and Hardware
Figure DVA-420

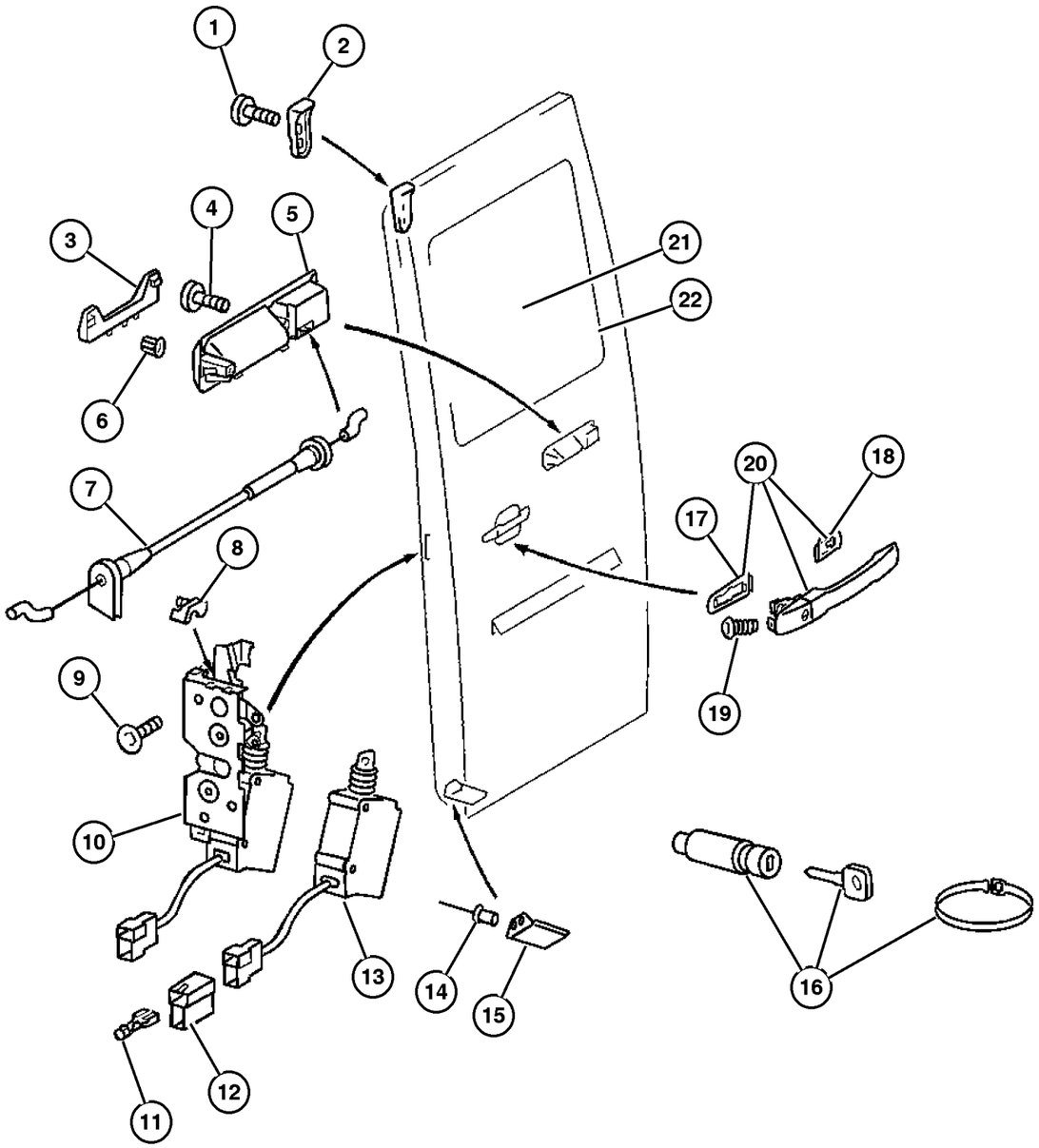

ITEM	PART NUMBER	QTY	LINE	SERIES	BODY	ENGINE	TRANS	TRIM	DESCRIPTION
		1	2, 6	L	51, 52, 54, 55, 56				Privacy,Heated, Right Hand
		1	3, 7	L	12, 15, 16				Privacy,Heated, Right Hand
	5134 325AA	1	2, 6	L	11, 12, 14, 15, 16				Privacy,Non-Heated, Right Hand
		1	2, 6	L	51, 52, 54, 55, 56				Privacy,Non-Heated, Right Hand
		1	3, 7	L	12, 15, 16				Privacy,Non-Heated, Right Hand
22									WEATHERSTRIP, Sliding Door Glass
	5104 364AA	1	2, 6	L	11, 12, 14, 15, 16				
		1	2, 6	L	51, 52, 54, 55, 56				
		1	3, 7	L	12, 15, 16				

Refer to Model Legend Information Bookmark

AR = Use as required - = Non illustrated part # = New this model year

March 3, 2006

« RETURN TO GROUP INDEX

«

Door, Cargo Lock and Control
Figure DVA-430

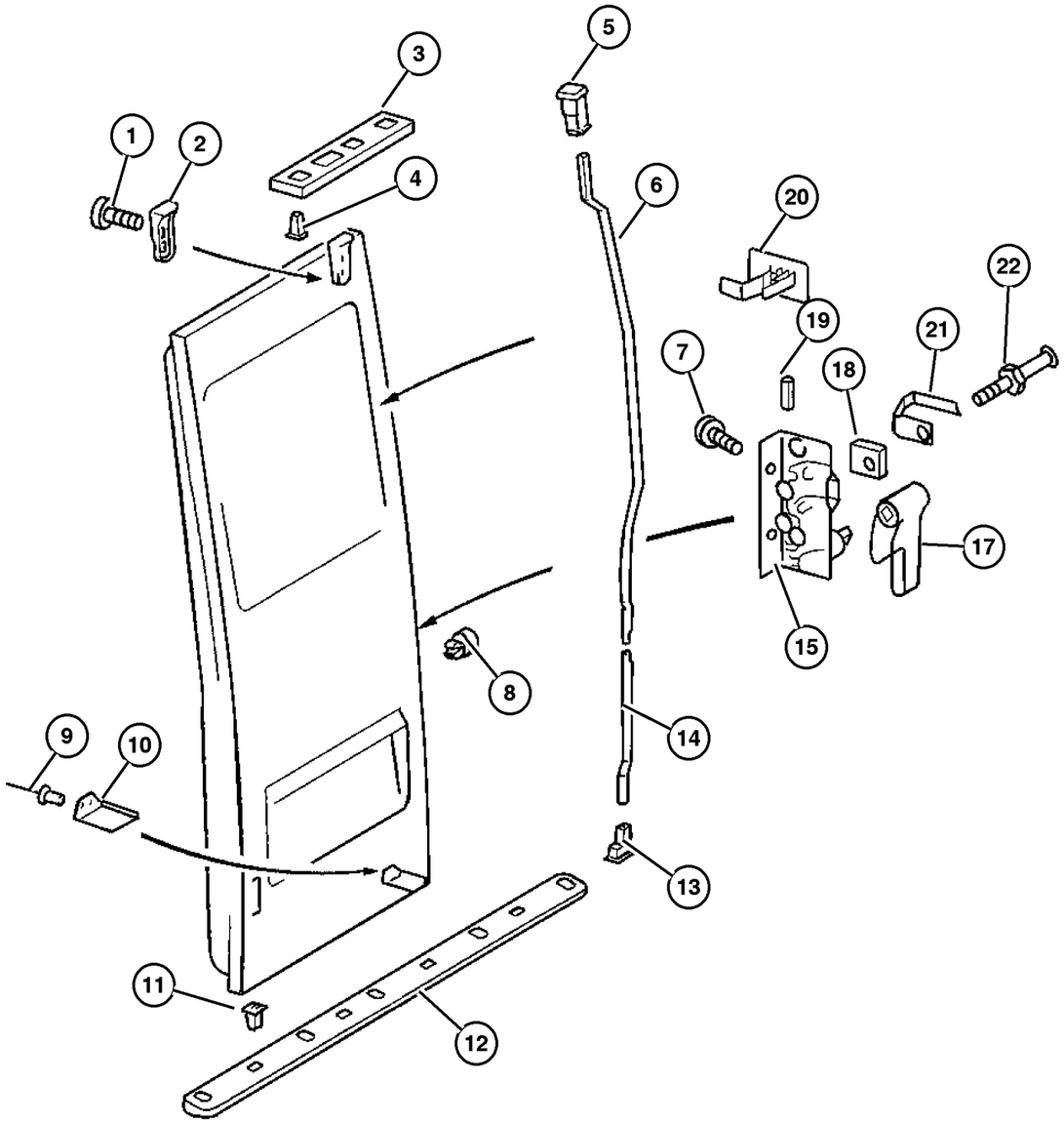

ITEM	PART NUMBER	QTY	LINE	SERIES	BODY	ENGINE	TRANS	TRIM	DESCRIPTION
1									SCREW
	6104 142AA	2	2, 6	L	01, 02, 06				
		2	2, 6	L	11, 12, 14, 15, 16				
		2	2, 6	L	51, 52, 54, 55, 56				
		2	3, 7	L	02, 06				
		2	3, 7	L	12, 15, 16				
2									SPACER, Door Lock Striker
	5123 997AA	1	2, 6	L	11, 12, 14, 15, 16				
		1	2, 6	L	51, 52, 54, 55, 56				
		1	3, 7	L	12, 15, 16				
3									PLATE, Door Latch Striker
	5104 428AA	1	2, 6	L	11, 12, 14, 15, 16				
		1	2, 6	L	51, 52, 54, 55, 56				
		1	3, 7	L	12, 15, 16				
4									RETAINER
	5104 536AA	10	2, 6	L	11, 12, 14, 15, 16				
		10	2, 6	L	51, 52, 54, 55, 56				
		10	3, 7	L	12, 15, 16				
5									GUIDE
	5104 384AA	1	2, 6	L	11, 12, 14, 15, 16				

Refer to Model Legend Information Bookmark

AR = Use as required - = Non illustrated part # = New this model year

March 3, 2006

« RETURN TO GROUP INDEX

»

Door, Cargo Lock and Control
Figure DVA-430

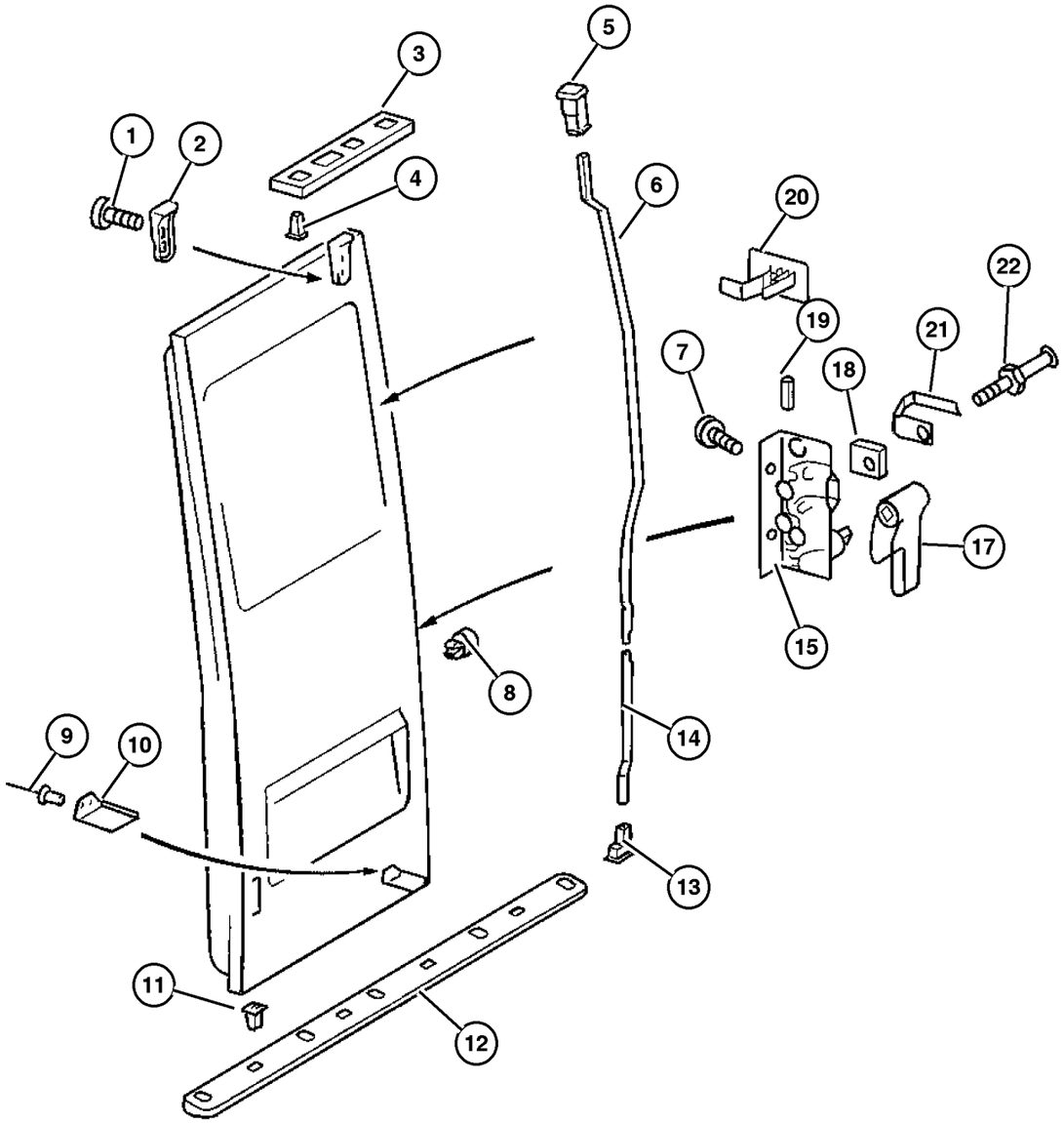

ITEM	PART NUMBER	QTY	LINE	SERIES	BODY	ENGINE	TRANS	TRIM	DESCRIPTION
		1	2, 6	L	51, 52, 54, 55, 56				
		1	3, 7	L	12, 15, 16				
6									ROD, Inside Handle to Latch
	5133 928AA	1	2, 6	L	11, 12				With Standard Roof
		1	2, 6	L	51, 52				With Standard Roof
		1	3, 7	L	12				With Standard Roof
	5133 929AA	1	2, 6	L	14, 15, 16				With High Roof
		1	2, 6	L	54, 55, 56				With High Roof
		1	3, 7	L	15, 16				With High Roof
7									SCREW, "ELECTRIC CHANGE-OVER VALVE TO BRACKET, M 6X12", SPRINTER, (NOT SERVICED) (Not Serviced)
8									CLIP
	5125 577AA	2	2, 6	L	11, 12, 14, 15, 16				
		2	2, 6	L	51, 52, 54, 55, 56				
		2	3, 7	L	12, 15, 16				
9									RIVET
	5125 819AA	2	2, 6	L	11, 12, 14, 15, 16				
		2	2, 6	L	51, 52, 54, 55, 56				
		2	3, 7	L	12, 15, 16				
10									SPACER, Door Lock Striker
	5123 997AA	1	2, 6	L	11, 12, 14, 15, 16				
		1	2, 6	L	51, 52, 54, 55, 56				
		1	3, 7	L	12, 15, 16				
11									RETAINER

Refer to Model Legend Information Bookmark

AR = Use as required - = Non illustrated part # = New this model year

March 3, 2006

« RETURN TO GROUP INDEX

« »

Door, Cargo Lock and Control
Figure DVA-430

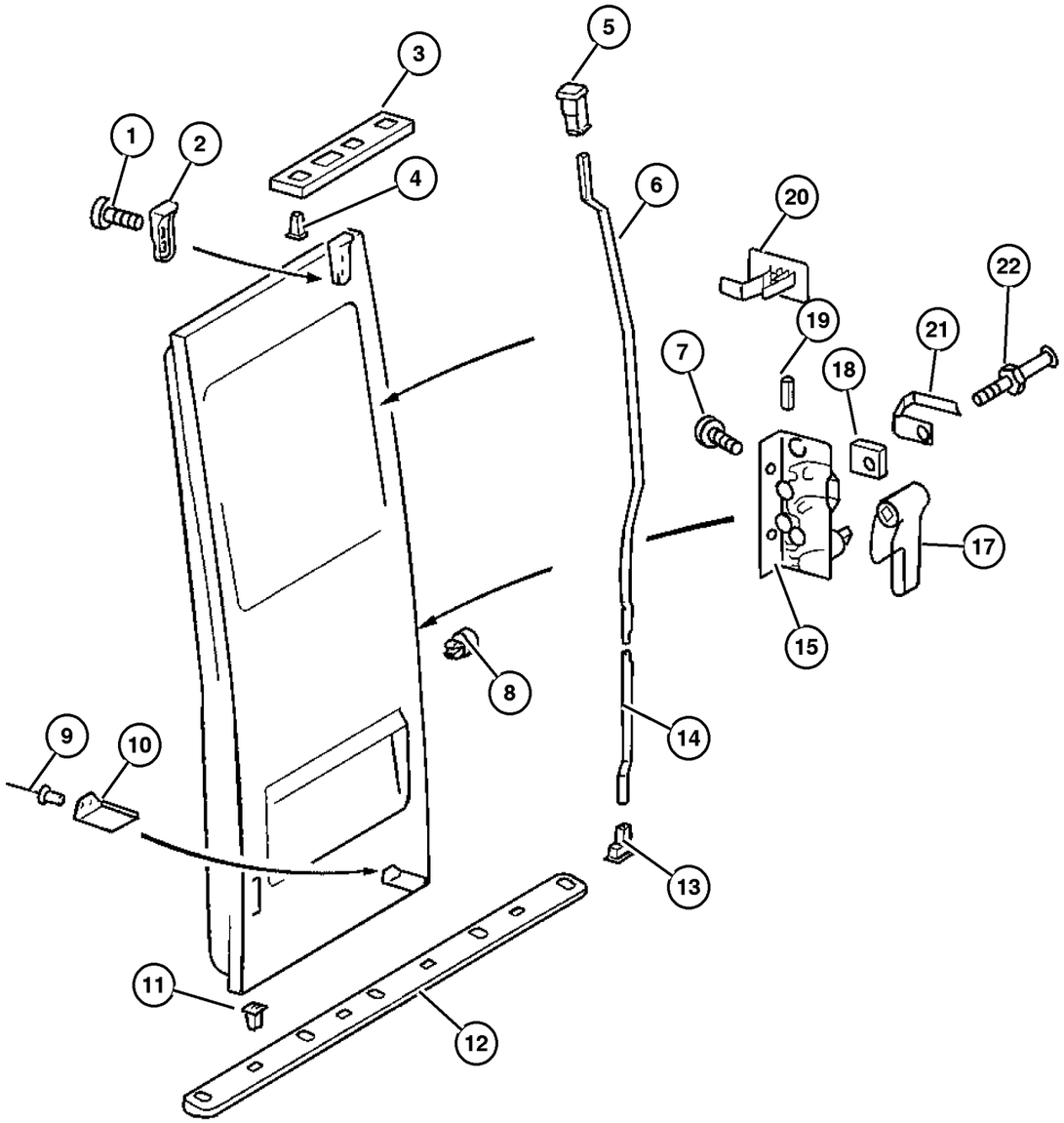

ITEM	PART NUMBER	QTY	LINE	SERIES	BODY	ENGINE	TRANS	TRIM	DESCRIPTION
	5104 536AA	10	2, 6	L	11, 12, 14, 15, 16				
		10	2, 6	L	51, 52, 54, 55, 56				
		10	3, 7	L	12, 15, 16				
12									PLATE, Rear Door Scuff
	5104 425AA	1	2, 6	L	11, 12, 14, 15, 16				
		1	2, 6	L	51, 52, 54, 55, 56				
		1	3, 7	L	12, 15, 16				
13									GUIDE
	5103 959AA	1	2, 6	L	11, 12, 14, 15, 16				
		1	2, 6	L	51, 52, 54, 55, 56				
		1	3, 7	L	12, 15, 16				
14									ROD, Inside Handle to Latch
	5124 000AA	1	2, 6	L	11, 12, 14, 15, 16				
		1	2, 6	L	51, 52, 54, 55, 56				
		1	3, 7	L	12, 15, 16				
15									LOCK, Rear Cargo Door
	5104 368AA	1	2, 6	L	11, 12, 14, 15, 16				
		1	3, 7	L	12, 15, 16				
-16	5104 371AA-	1	3, 7	L	12, 15, 16				LATCH, Rear Door
17									HANDLE, Inside Release

Refer to Model Legend Information Bookmark

AR = Use as required - = Non illustrated part # = New this model year

March 3, 2006

« RETURN TO GROUP INDEX

« »

Door, Cargo Lock and Control
Figure DVA-430

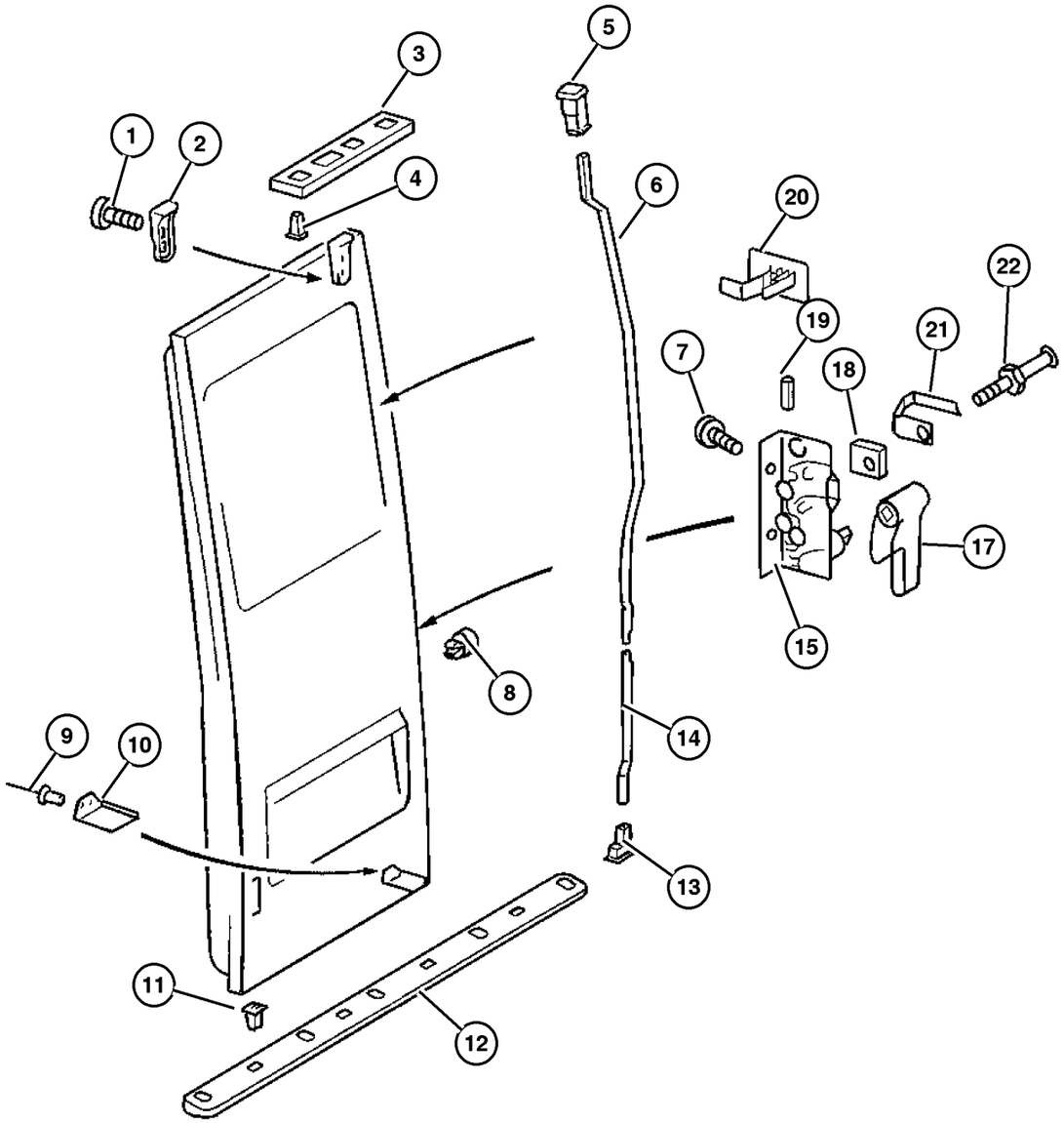

ITEM	PART NUMBER	QTY	LINE	SERIES	BODY	ENGINE	TRANS	TRIM	DESCRIPTION
	5104 383AA	1	2, 6	L	11, 12, 14, 15, 16				
		1	2, 6	L	51, 52, 54, 55, 56				
		1	3, 7	L	12, 15, 16				
18									NUT
	5103 668AA	1	2, 6	L	11, 12, 14, 15, 16				
		1	2, 6	L	51, 52, 54, 55, 56				
		1	3, 7	L	12, 15, 16				
19									BUSHING
	5133 930AA	1	2, 6	L	11, 12, 14, 15, 16				
		1	2, 6	L	51, 52, 54, 55, 56				
		1	3, 7	L	12, 15, 16				
20									GUIDE
	5104 382AA	1	2, 6	L	11, 12, 14, 15, 16				
		1	2, 6	L	51, 52, 54, 55, 56				
		1	3, 7	L	12, 15, 16				
21									CLAMP
	5103 670AA	1	2, 6	L	11, 12, 14, 15, 16				
		1	2, 6	L	51, 52, 54, 55, 56				
		1	3, 7	L	12, 15, 16				
22									PIN, Latch Striker

Refer to Model Legend Information Bookmark

AR = Use as required - = Non illustrated part # = New this model year

March 3, 2006

« RETURN TO GROUP INDEX

« »

Door, Cargo Lock and Control
Figure DVA-430

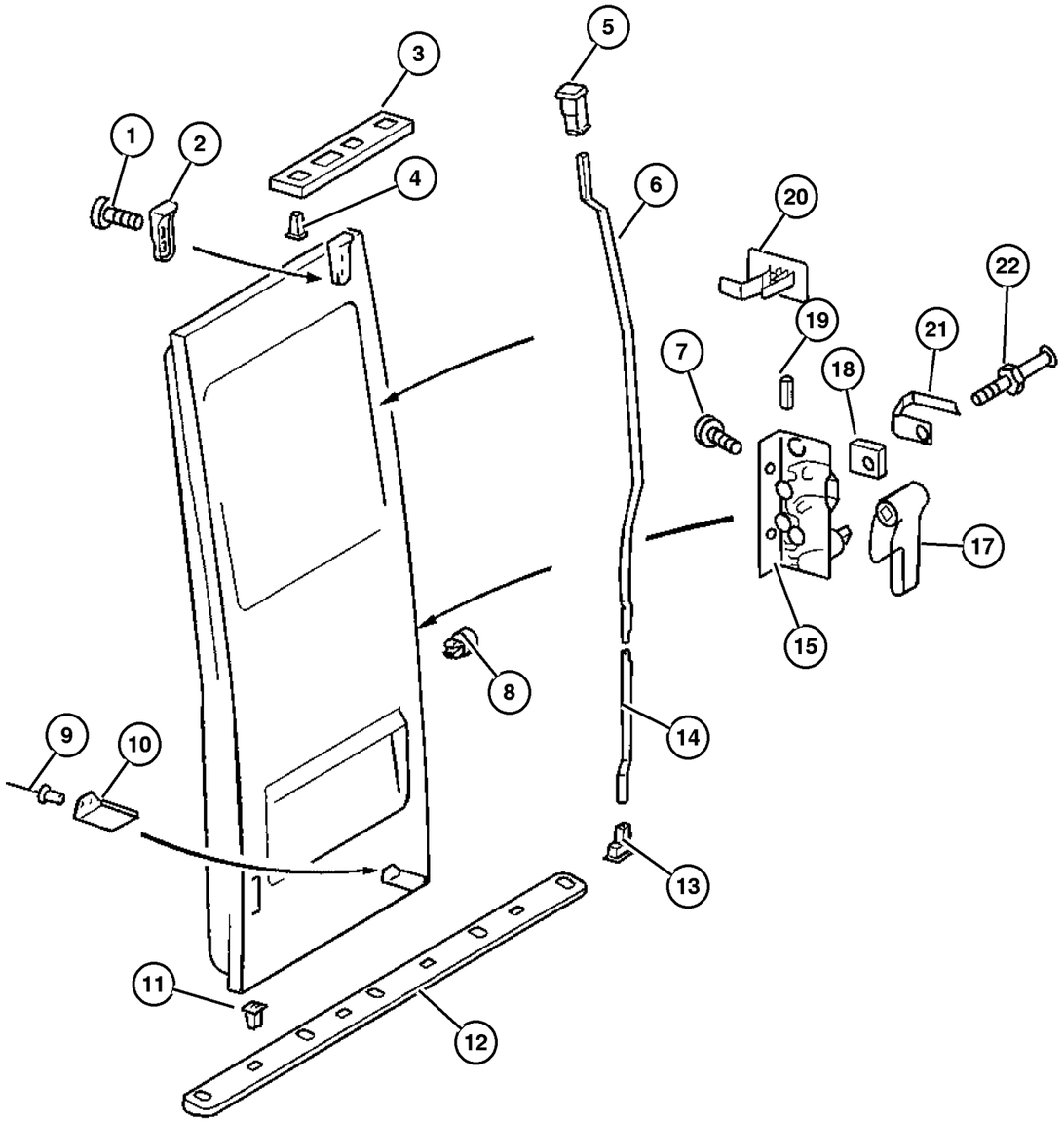

ITEM	PART NUMBER	QTY	LINE	SERIES	BODY	ENGINE	TRANS	TRIM	DESCRIPTION
	5103 669AA	1	2, 6	L	11, 12, 14, 15, 16				
		1	2, 6	L	51, 52, 54, 55, 56				
		1	3, 7	L	12, 15, 16				

Refer to Model Legend Information Bookmark

AR = Use as required - = Non illustrated part # = New this model year

March 3, 2006

« RETURN TO GROUP INDEX

Mirrors, Exterior
Figure DVA-520

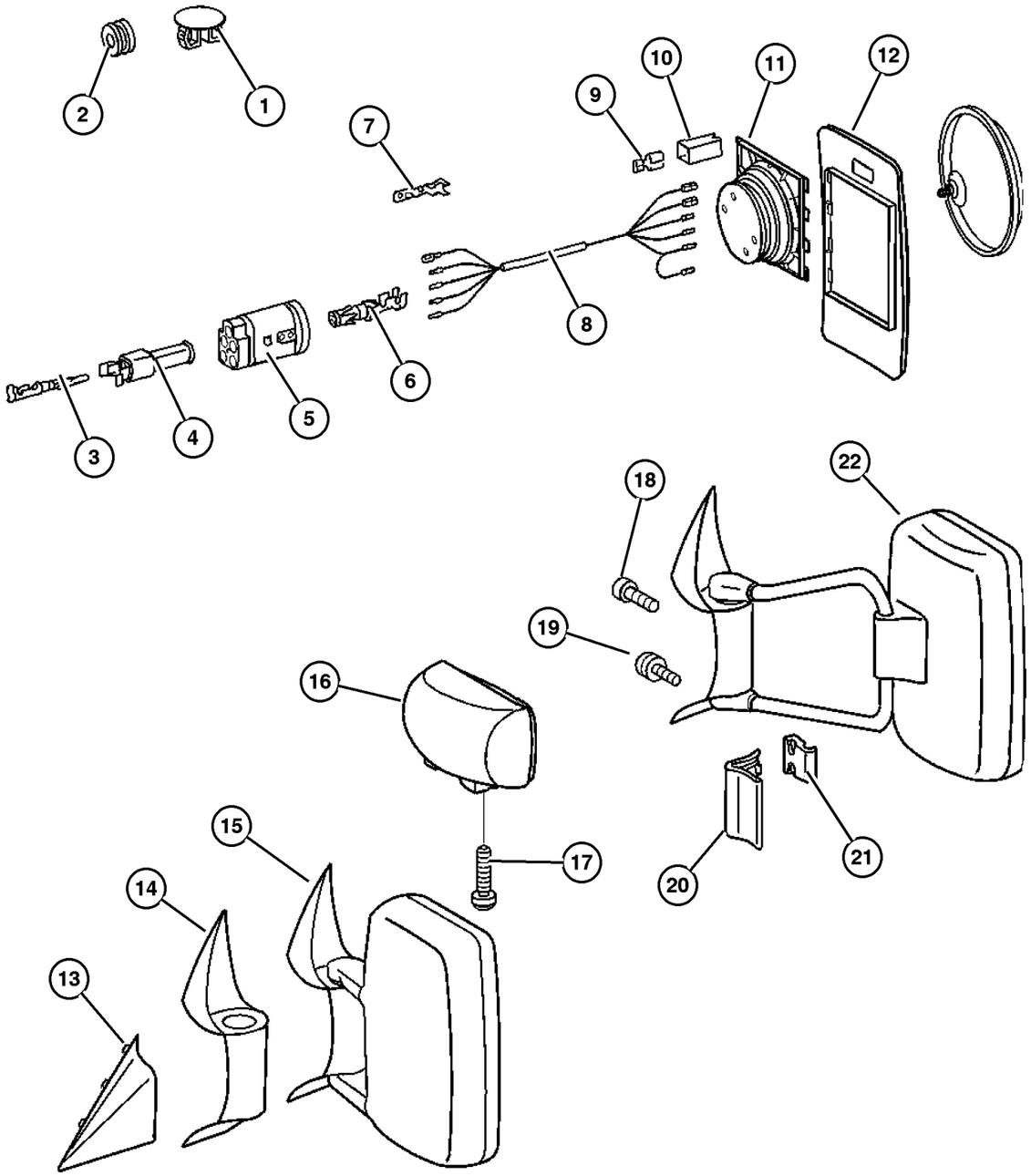

ITEM	PART NUMBER	QTY	LINE	SERIES	BODY	ENGINE	TRANS	TRIM	DESCRIPTION
Sales Code:									
[XZD]= Mirrors Width up to 90.5									
1									PLUG
	5104 032AA	1	2, 6	L	01, 02, 06				
		1	2, 6	L	11, 12, 14, 15, 16				
		1	2, 6	L	51, 52, 54, 55, 56				
		1	3, 7	L	02, 06				
2									GROMMET
	5125 929AA	1	2, 6	L	01, 02, 06				
		1	2, 6	L	11, 12, 14, 15, 16				
		1	3, 7	L	02, 06				
		1	3, 7	L	12, 15, 16				
3									PLUG
	5104 032AA	1	2, 6	L	01, 02, 06				
		1	2, 6	L	11, 12, 14, 15, 16				
		1	2, 6	L	51, 52, 54, 55, 56				
		1	3, 7	L	02, 06				
		1	3, 7	L	12, 15, 16				
4									CONNECTOR
	5120 744AA	1	2, 6	L	01, 02, 06				
		1	2, 6	L	11, 12, 14, 15, 16				
		1	2, 6	L	51, 52, 54, 55, 56				
		1	3, 7	L	02, 06				
		1	3, 7	L	12, 15, 16				
5									PLUG

Refer to Model Legend Information Bookmark

Mirrors, Exterior
Figure DVA-520

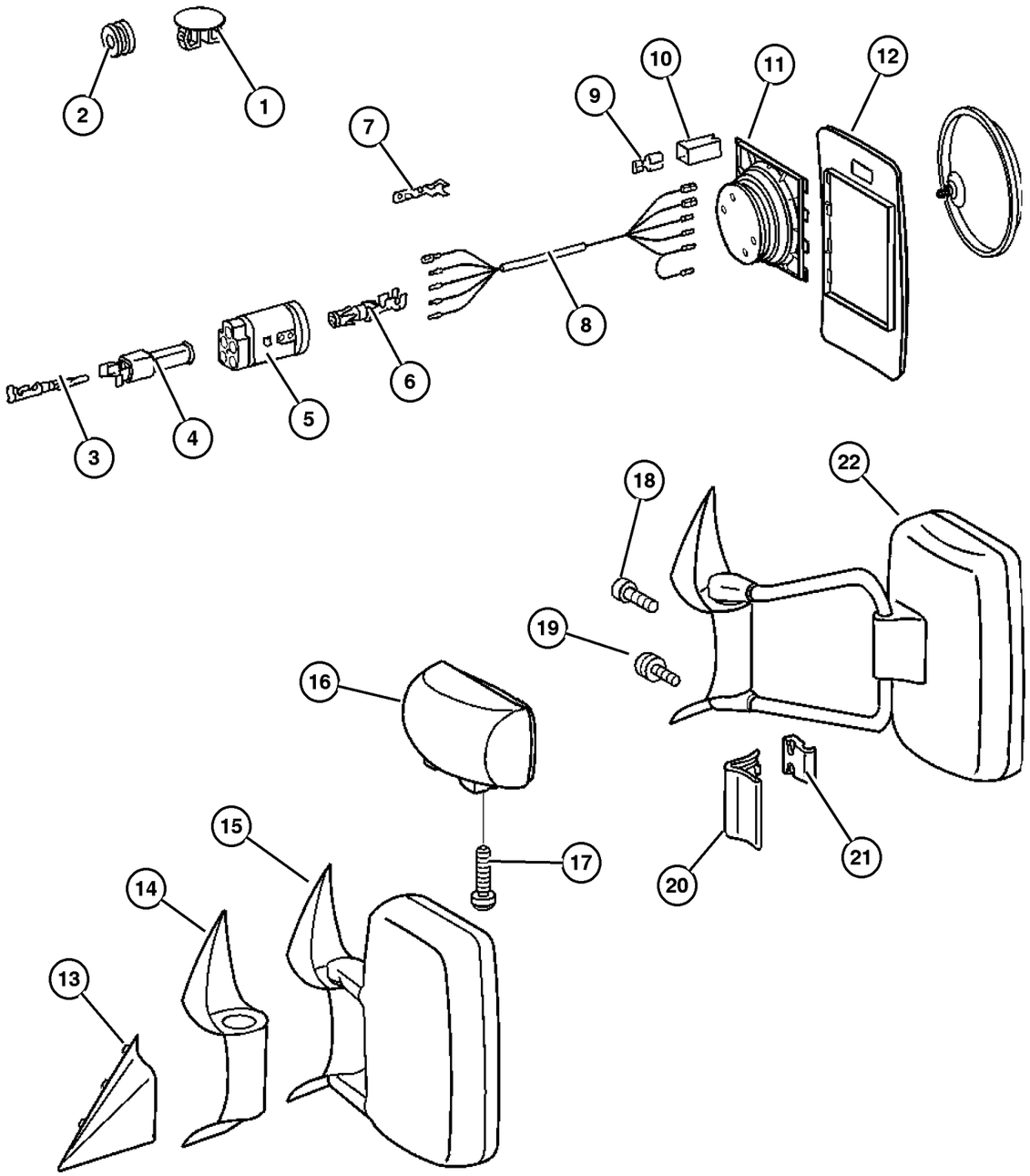

ITEM	PART NUMBER	QTY	LINE	SERIES	BODY	ENGINE	TRANS	TRIM	DESCRIPTION
	5133 508AA	1	2, 6	L	01, 02, 06				
		1	2, 6	L	11, 12, 14, 15, 16				
		1	2, 6	L	51, 52, 54, 55, 56				
		1	3, 7	L	02, 06				
		1	3, 7	L	12, 15, 16				
6									TERMINAL
	5133 509AA	5	2, 6	L	01, 02, 06				
		5	2, 6	L	11, 12, 14, 15, 16				
		5	2, 6	L	51, 52, 54, 55, 56				
		5	3, 7	L	02, 06				
		5	3, 7	L	12, 15, 16				
7									TERMINAL, Male
	5133 377AA	1	2, 6	L	01, 02, 06				
		1	2, 6	L	11, 12, 14, 15, 16				
		1	2, 6	L	51, 52, 54, 55, 56				
		1	3, 7	L	02, 06				
		1	3, 7	L	12, 15, 16				
8									WIRING, Mirror Jumper
	5133 503AA	1	2, 6	L	01, 02, 06				
		1	2, 6	L	11, 12, 14, 15, 16				
		1	2, 6	L	51, 52, 54, 55, 56				
9									PLUG

Refer to Model Legend Information Bookmark

AR = Use as required - = Non illustrated part # = New this model year

March 3, 2006

« RETURN TO GROUP INDEX

Mirrors, Exterior
Figure DVA-520

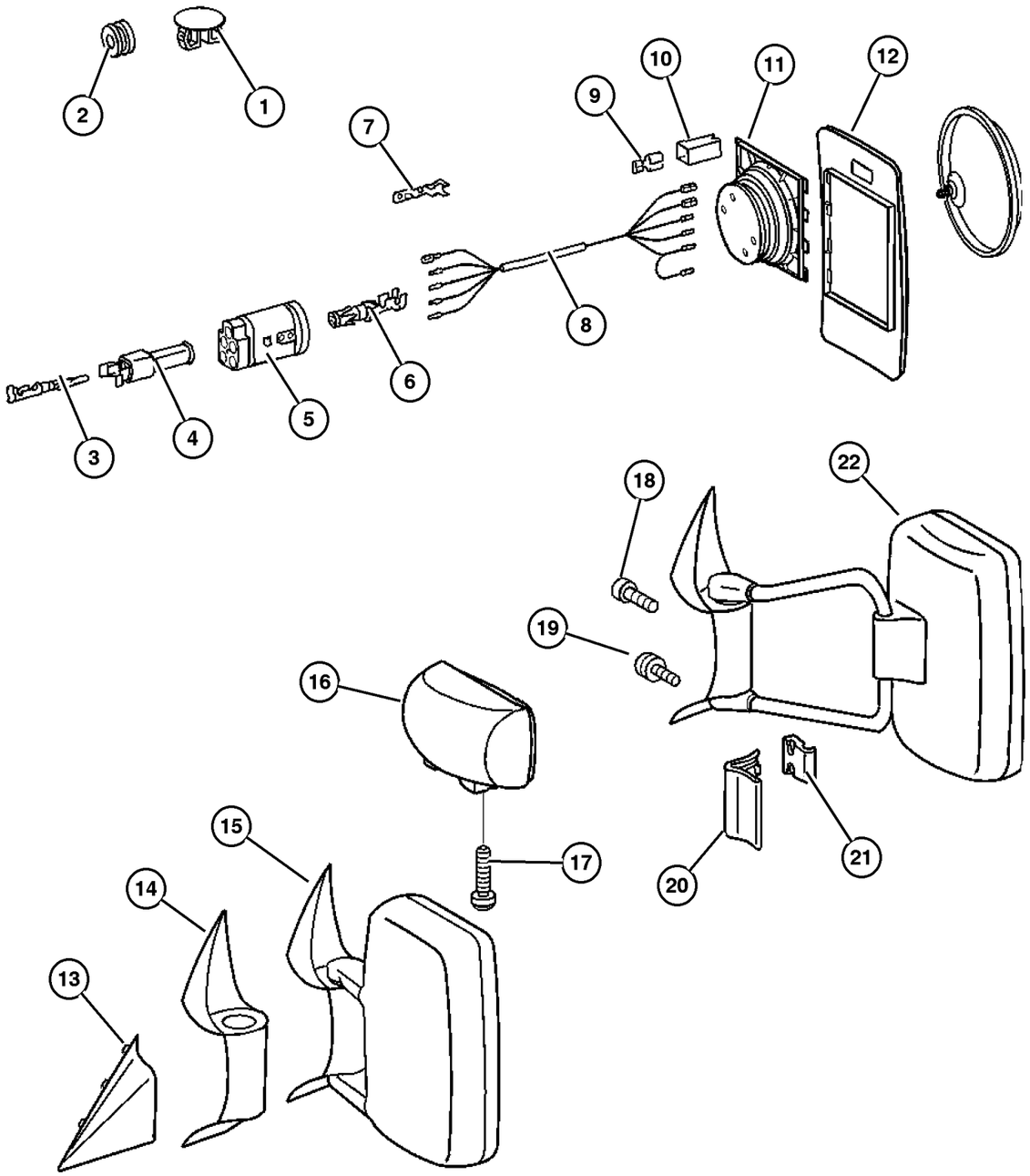

ITEM	PART NUMBER	QTY	LINE	SERIES	BODY	ENGINE	TRANS	TRIM	DESCRIPTION
	5133 367AA	1	2, 6	L	01, 02, 06				
		1	2, 6	L	11, 12, 14, 15, 16				
		1	2, 6	L	51, 52, 54, 55, 56				
		1	3, 7	L	02, 06				
		1	3, 7	L	12, 15, 16				
10									TERMINAL
	5133 504AA	1	2, 6	L	01, 02, 06				
		1	2, 6	L	11, 12, 14, 15, 16				
		1	2, 6	L	51, 52, 54, 55, 56				
		1	3, 7	L	02, 06				
		1	3, 7	L	12, 15, 16				
11									MOTOR, Electric
	5133 505AA	1	2, 6	L	01, 02, 06				
		1	2, 6	L	11, 12, 14, 15, 16				
		1	2, 6	L	51, 52, 54, 55, 56				
		1	3, 7	L	02, 06				
		1	3, 7	L	12, 15, 16				
12									GLASS, Mirror Replacement
	5103 757AA	1	3, 7	L	02, 06				Right
	5103 758AA	1	2, 6	L	01, 02, 06				Left
		1	2, 6	L	11, 12, 14, 15, 16				Left
		1	2, 6	L	51, 52, 54, 55, 56				Left

Refer to Model Legend Information Bookmark

Mirrors, Exterior
Figure DVA-520

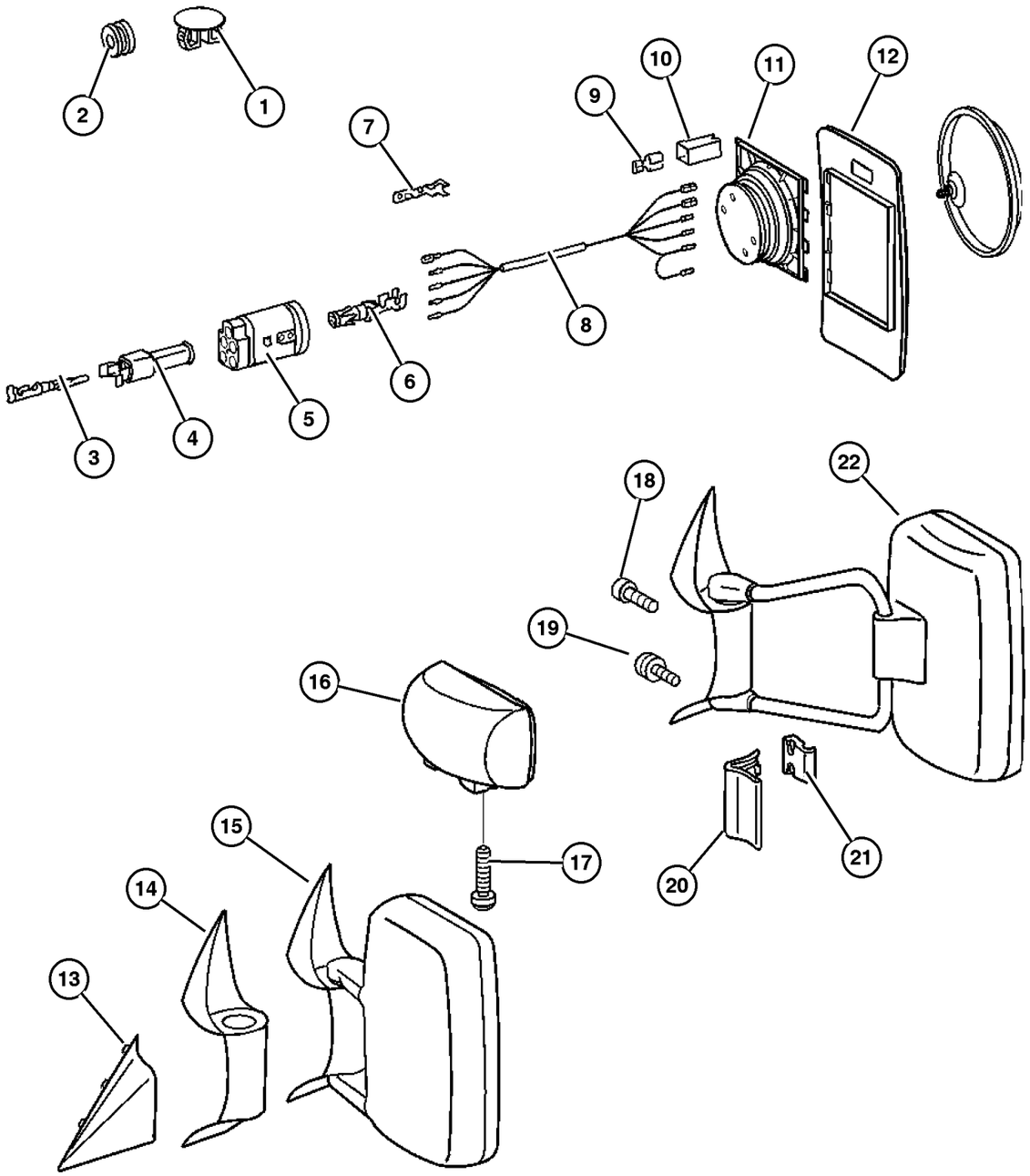

ITEM	PART NUMBER	QTY	LINE	SERIES	BODY	ENGINE	TRANS	TRIM	DESCRIPTION
		1	3, 7	L	02, 06				Left
		1	3, 7	L	12, 15, 16				Left
13									COVER, Mirror Flag
	5104 444AA	1	2, 6	L	01, 02, 06				Right
		1	2, 6	L	11, 12, 14, 15, 16				Right
		1	2, 6	L	51, 52, 54, 55, 56				Right
		1	3, 7	L	02, 06				Right
		1	3, 7	L	12, 15, 16				Right
	5104 445AA	1	2, 6	L	01, 02, 06				Left
		1	2, 6	L	11, 12, 14, 15, 16				Left
		1	2, 6	L	51, 52, 54, 55, 56				Left
		1	3, 7	L	02, 06				Left
		1	3, 7	L	12, 15, 16				Left
14									COVER, Mirror Flag
	5104 446AA	1	2, 6	L	01, 02, 06				Left
		1	2, 6	L	11, 12, 14, 15, 16				Left
		1	2, 6	L	51, 52, 54, 55, 56				Left
		1	3, 7	L	02, 06				Left
		1	3, 7	L	12, 15, 16				Left
	5133 499AA	1	2, 6	L	01, 02, 06				Right
		1	2, 6	L	11, 12, 14, 15, 16				Right

Refer to Model Legend Information Bookmark

Mirrors, Exterior
Figure DVA-520

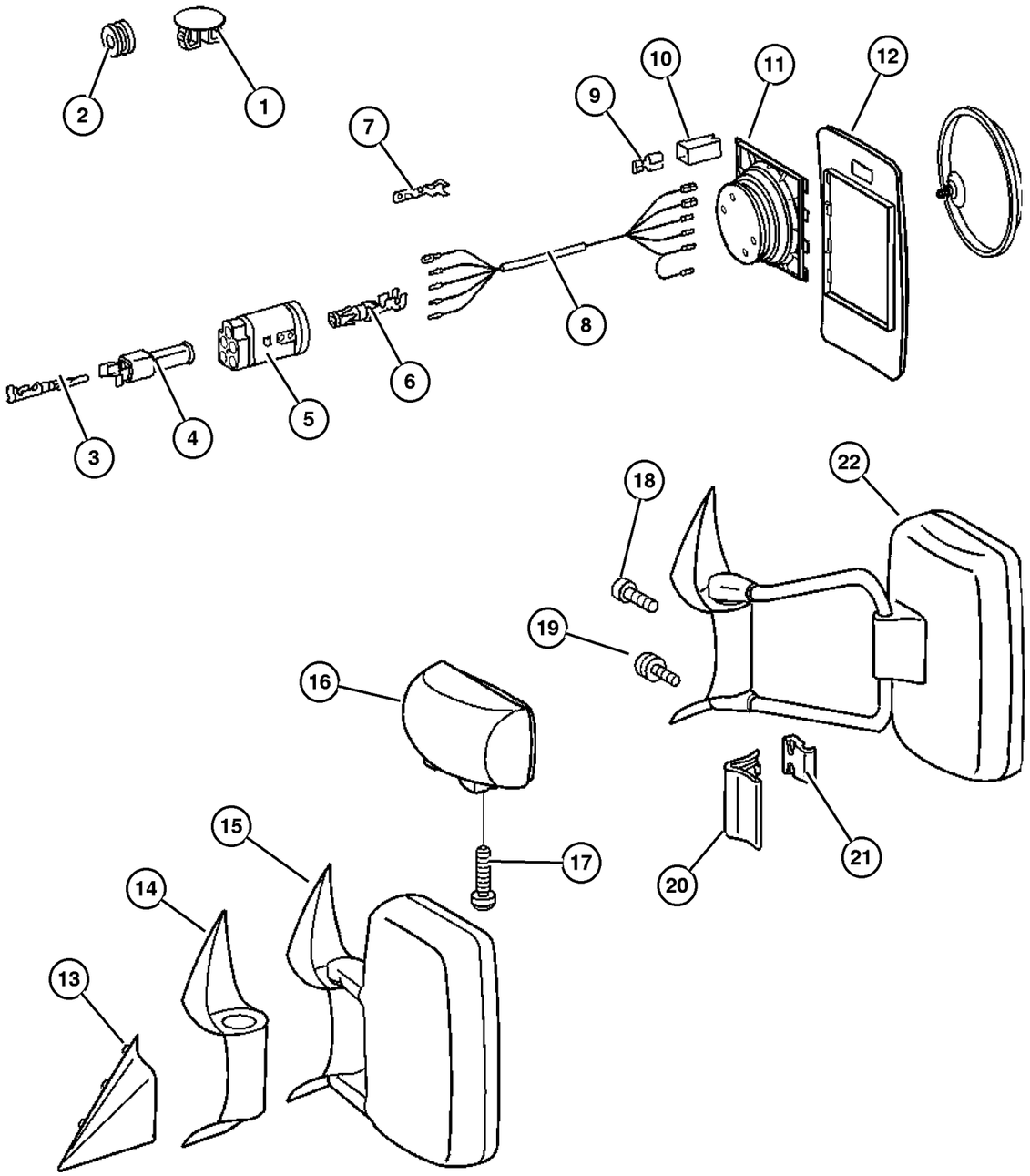

ITEM	PART NUMBER	QTY	LINE	SERIES	BODY	ENGINE	TRANS	TRIM	DESCRIPTION
		1	2, 6	L	51, 52, 54, 55, 56				Right
		1	3, 7	L	02, 06				Right
		1	3, 7	L	12, 15, 16				Right
15	5104 440AA	1	2, 6	L	01, 02, 06				MIRROR, Outside Rearview Left
		1	2, 6	L	11, 12, 14, 15, 16				Left
		1	2, 6	L	51, 52, 54, 55, 56				Left
		1	3, 7	L	02, 06				Left
		1	3, 7	L	12, 15, 16				Left
	5104 441AA	1	2, 6	L	01, 02, 06				Right
		1	2, 6	L	11, 12, 14, 15, 16				Right
		1	2, 6	L	51, 52, 54, 55, 56				Right
		1	3, 7	L	02, 06				Right
		1	3, 7	L	12, 15, 16				Right
	5124 233AA	1	2, 6	L	01, 02, 06				With [XZD], Left
		1	3, 7	L	02, 06				With [XZD], Left
	5124 235AA	1	2, 6	L	01, 02, 06				With [XZD], Right
		1	3, 7	L	02, 06				With [XZD], Right
16	5103 593AA	1	2, 6	L	01, 02, 06				MIRROR, Outside Rearview Right
		1	2, 6	L	11, 12, 14, 15, 16				Right
		1	2, 6	L	51, 52, 54, 55, 56				Right
		1	3, 7	L	02, 06				Right

Refer to Model Legend Information Bookmark

Mirrors, Exterior
Figure DVA-520

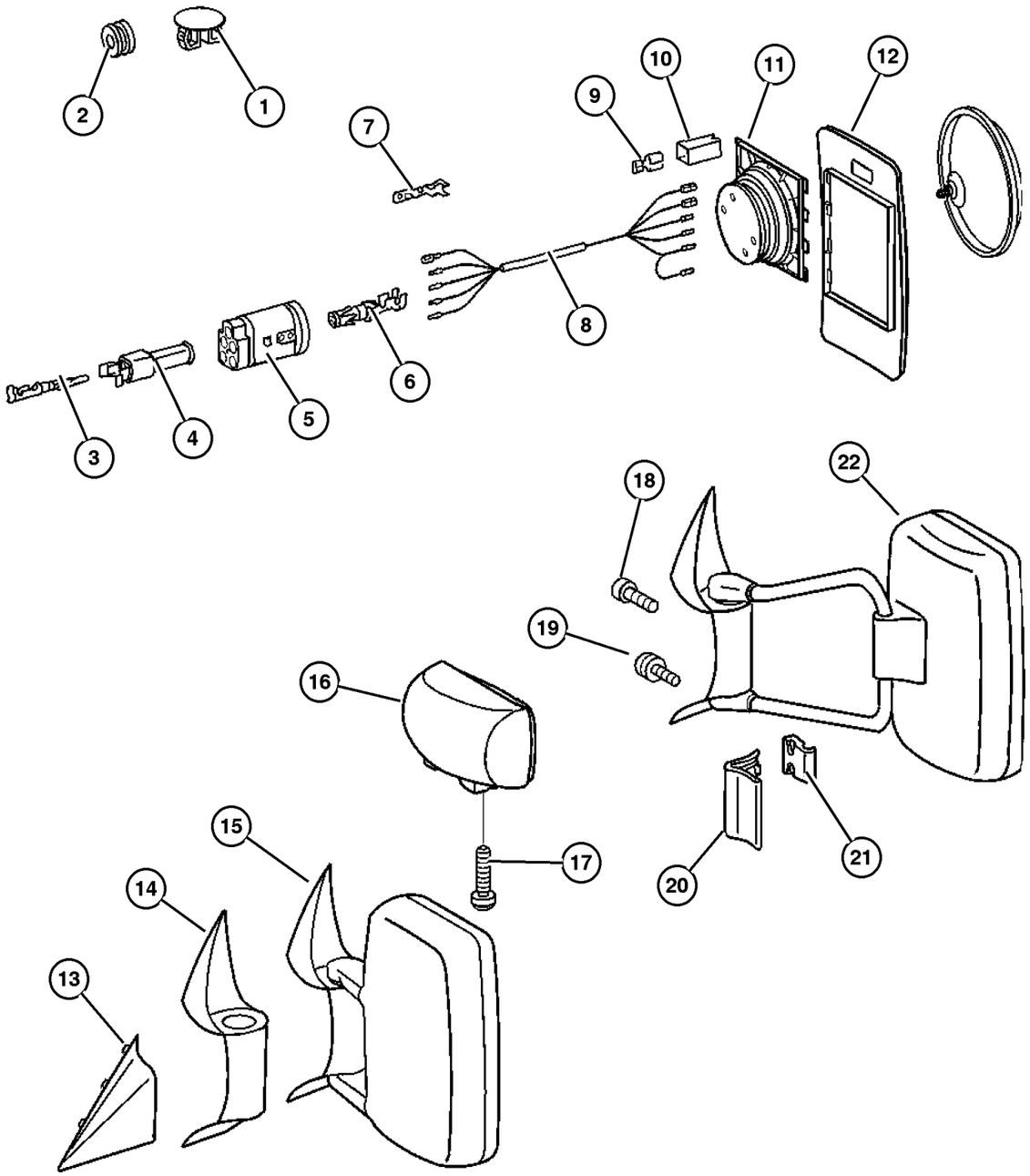

ITEM	PART NUMBER	QTY	LINE	SERIES	BODY	ENGINE	TRANS	TRIM	DESCRIPTION
		1	3, 7	L	12, 15, 16				Right
	5103 592AA	1	2, 6	L	01, 02, 06				Left
		1	2, 6	L	11, 12, 14, 15, 16				Left
		1	2, 6	L	51, 52, 54, 55, 56				Left
		1	3, 7	L	02, 06				Left
		1	3, 7	L	12, 15, 16				Left
17									SCREW
	5133 507AA	2	2, 6	L	01, 02, 06				
		2	2, 6	L	11, 12, 14, 15, 16				
		2	2, 6	L	51, 52, 54, 55, 56				
		1	3, 7	L	02, 06				
		1	3, 7	L	12, 15, 16				
18									BOLT, Torx
	5125 420AA	1	2, 6	L	01, 02, 06				
		1	2, 6	L	11, 12, 14, 15, 16				
		1	2, 6	L	51, 52, 54, 55, 56				
		1	3, 7	L	02, 06				
		1	3, 7	L	12, 15, 16				
19									SCREW
	5104 610AA	2	2, 6	L	01, 02, 06				
		2	2, 6	L	11, 12, 14, 15, 16				

Refer to Model Legend Information Bookmark

AR = Use as required - = Non illustrated part # = New this model year

March 3, 2006

« RETURN TO GROUP INDEX

Mirrors, Exterior
Figure DVA-520

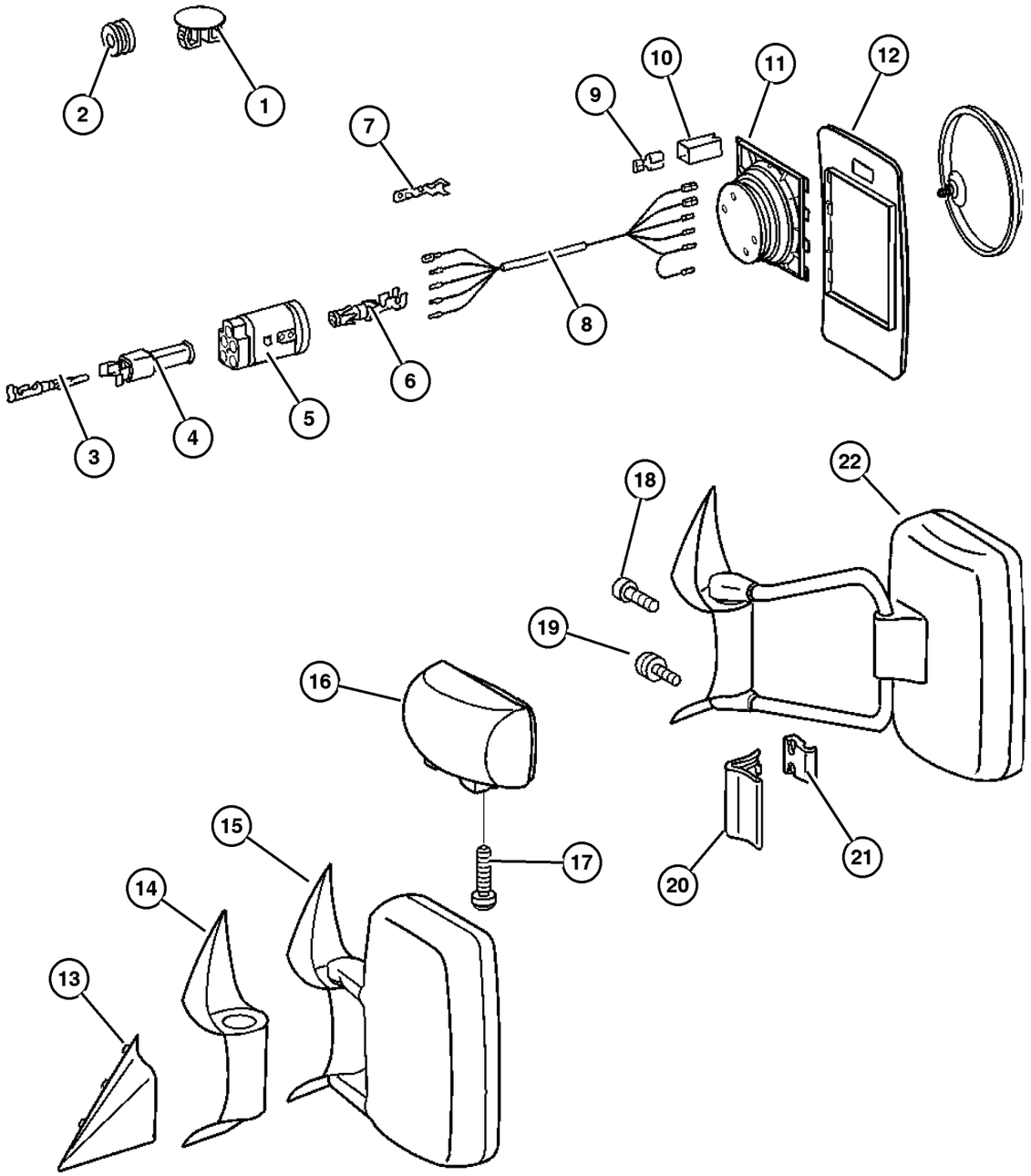

ITEM	PART NUMBER	QTY	LINE	SERIES	BODY	ENGINE	TRANS	TRIM	DESCRIPTION
		2	2, 6	L	51, 52, 54, 55, 56				
		2	3, 7	L	02, 06				
		2	3, 7	L	12, 15, 16				
20	5103 675AA	1	2, 6	L	01, 02, 06				COVER, Mirror Flag
		1	2, 6	L	11, 12, 14, 15, 16				
		1	2, 6	L	51, 52, 54, 55, 56				
		1	3, 7	L	02, 06				
		1	3, 7	L	12, 15, 16				
21	5133 500AA	2	2, 6	L	01, 02, 06				CLAMP
		2	2, 6	L	11, 12, 14, 15, 16				
		2	2, 6	L	51, 52, 54, 55, 56				
		2	3, 7	L	02, 06				
		2	3, 7	L	12, 15, 16				
22	5124 251AA	1	2, 6	L	01, 02, 06				MIRROR, Outside Rearview [LEG+GTB], Left
		1	2, 6	L	11, 12, 14, 15, 16				[LEG+GTB], Left
		1	2, 6	L	51, 52, 54, 55, 56				[LEG+GTB], Left
		1	3, 7	L	02, 06				[LEG+GTB], Left
		1	3, 7	L	12, 15, 16				[LEG+GTB], Left
	5124 255AA	1	2, 6	L	01, 02, 06				[LEG+GTB], Right

Refer to Model Legend Information Bookmark

Mirrors, Exterior
Figure DVA-520

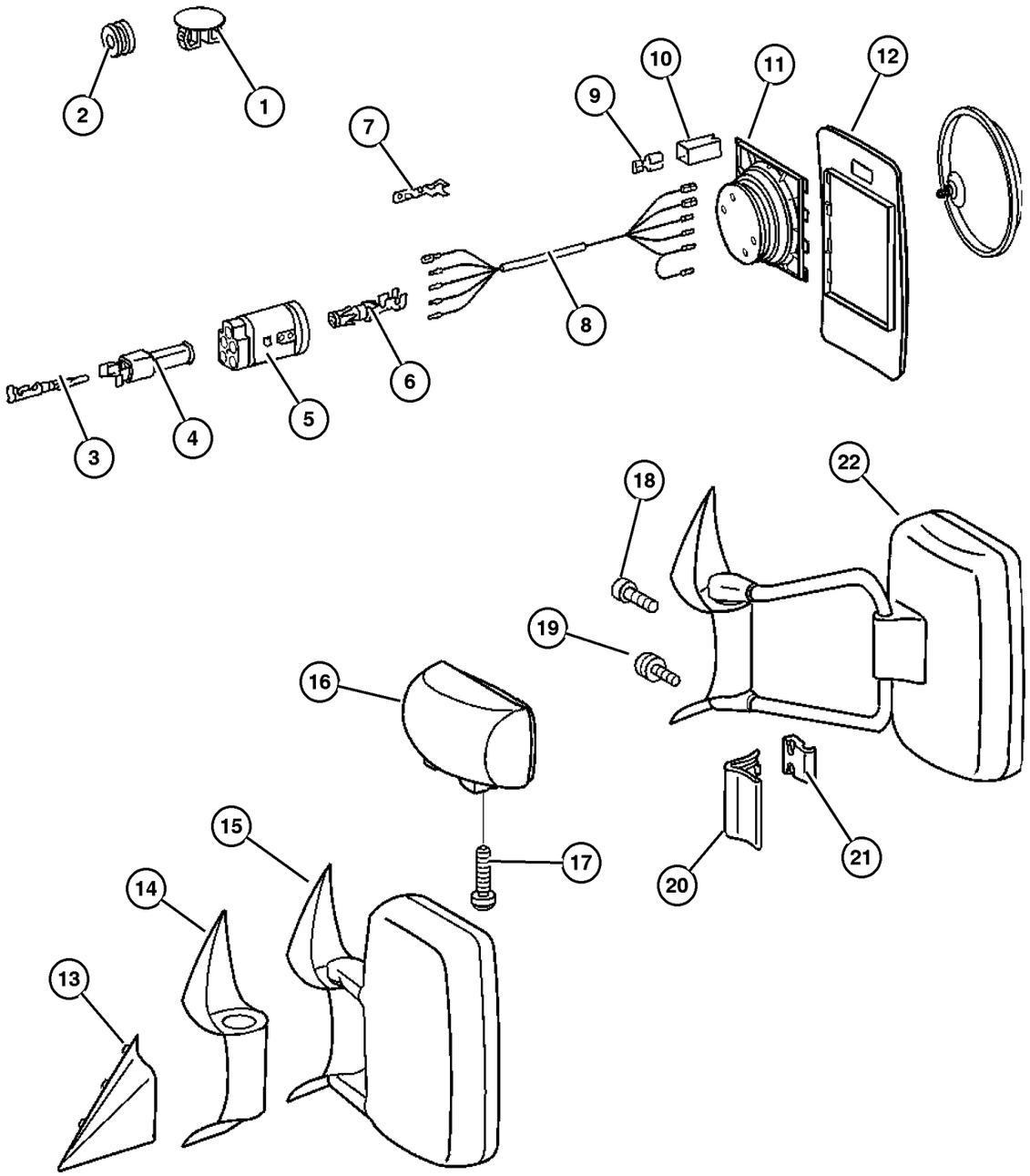

ITEM	PART NUMBER	QTY	LINE	SERIES	BODY	ENGINE	TRANS	TRIM	DESCRIPTION
		1	2, 6	L	11, 12, 14, 15, 16				[LEG+GTB], Right
		1	2, 6	L	51, 52, 54, 55, 56				[LEG+GTB], Right
		1	3, 7	L	02, 06				[LEG+GTB], Right
		1	3, 7	L	12, 15, 16				[LEG+GTB], Right
	5103 594AA	1	2, 6	L	01, 02, 06				[XZD+4XS] Or [XZD+4XS], Left
		1	3, 7	L	02, 06				[XZD+4XS] Or [XZD+4XS], Left
	5103 595AA	1	2, 6	L	01, 02, 06				[XZD+4XS] Or [XZD+4XS], Right
		1	3, 7	L	02, 06				[XZD+4XS] Or [XZD+4XS], Right
	5124 233AA	1	2, 6	L	01, 02, 06				[GTB+XZD+4XS] Or [GTB+XZD+4XS], Left
		1	3, 7	L	02, 06				[GTB+XZD+4XS] Or [GTB+XZD+4XS], Left
	5124 235AA	1	2, 6	L	01, 02, 06				[GTB+XZD+4XS] Or [GTB+XZD+4XS], Right
		1	3, 7	L	02, 06				[GTB+XZD+4XS] Or [GTB+XZD+4XS], Right
	5124 237AA	1	2, 6	L	01, 02, 06				[XZE+4XS] Or [XZE+4XS], Left
		1	3, 7	L	02, 06				[XZE+4XS] Or [XZE+4XS], Left
	5124 239AA	1	2, 6	L	01, 02, 06				[XZE+4XS] Or [XZE+4XS], Right
		1	3, 7	L	02, 06				[XZE+4XS] Or [XZE+4XS], Right
	5124 241AA	1	2, 6	L	01, 02, 06				[GTB+XZE+4XS] Or [GTB+XZE+4XS], Left
		1	3, 7	L	02, 06				[GTB+XZE+4XS] Or [GTB+XZE+4XS], Left
	5124 243AA	1	2, 6	L	01, 02, 06				[GTB+XZE+4XS] Or [GTB+XZE+4XS], Right
		1	3, 7	L	02, 06				[GTB+XZE+4XS] Or [GTB+XZE+4XS], Right

Refer to Model Legend Information Bookmark

Group – EVA

Exterior Ornamentation

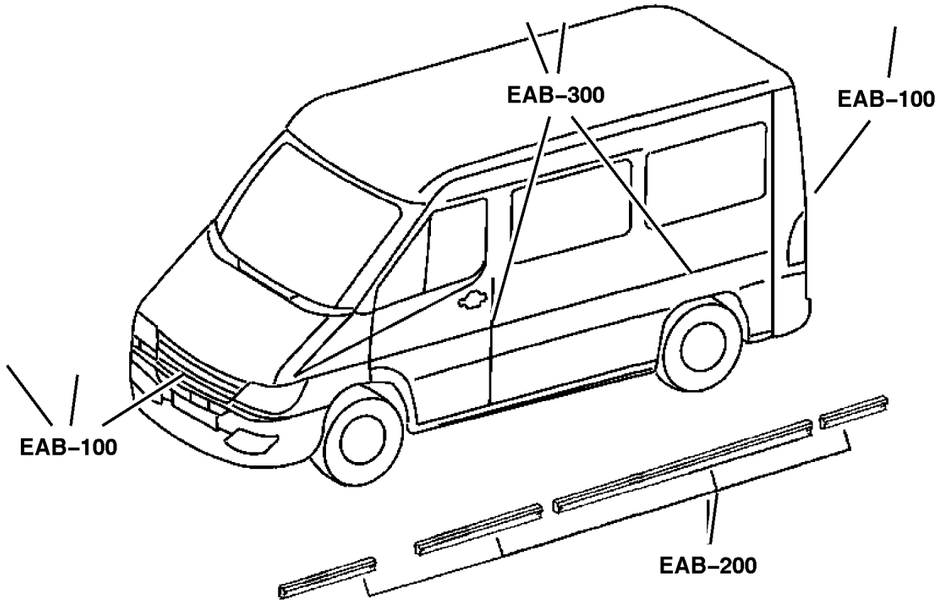

EVA–100 Nameplates	EVA–200 Moldings and Ornamentation		
3500 HC	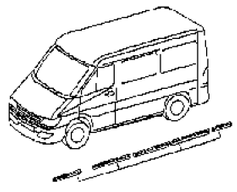		

GROUP EVA - Exterior Ornamentation

Illustration Title — Group-Fig. No.

Nameplates

Nameplates and Decals . . . . . Fig. EVA-120

Moldings and Ornamentation

Exterior Moldings . . . . . Fig. EVA-210

Nameplates and Decals
Figure EVA-120

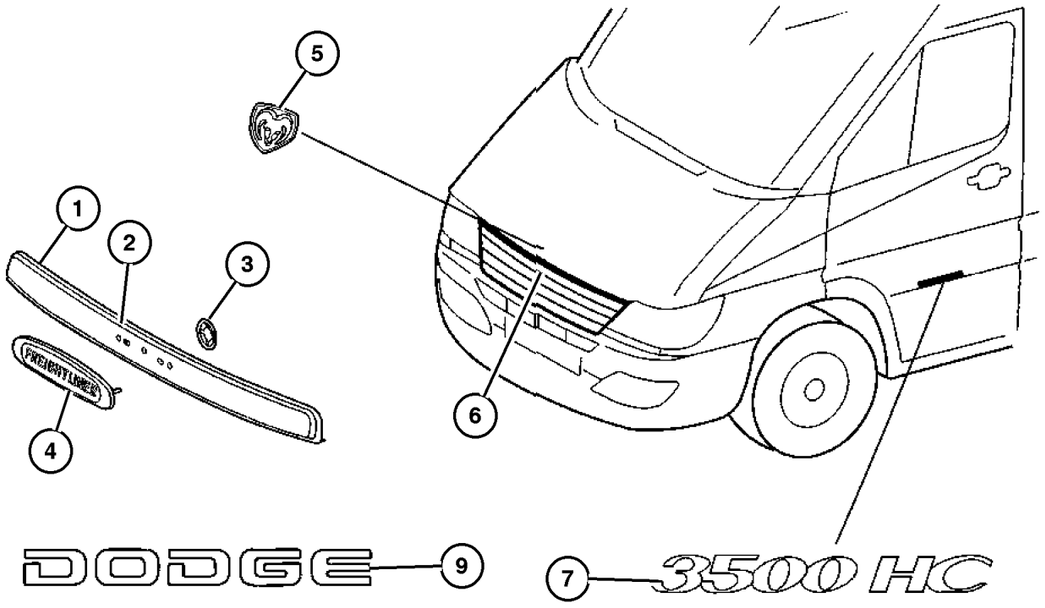

ITEM	PART NUMBER	QTY	LINE	SERIES	BODY	ENGINE	TRANS	TRIM	DESCRIPTION
NOTE:For [Dodge Sprinter] Aplications Dealer Must Remove The ['Ram'] Portion Of The Name Plate Prior To Instalation On The Vehicle.									
[Sprinter] Is Identified As A [2500, 3500] Not [Ram 2500, Ram 3500].									
Line Code [2 & 3] Are For [Dodge Sprinter] Only									
1									MOLDING, Hood
	5114 372AA	1	2	L	01, 02, 06				[MG4-58N]
		1	2	L	11, 12, 14, 15, 16				[MG4-58N]
		1	2	L	51, 52, 54, 55, 56				[MG4-58N]
		1	3	L	02, 06				[MG4-58N]
		1	3	L	12, 15, 16				[MG4-58N]
2									MOLDING, Hood
	5104 400AA	1	6	L	01, 02, 06				[MGQ]
		1	6	L	11, 12, 14, 15, 16				[MGQ]
		1	6	L	51, 52, 54, 55, 56				[MGQ]
		1	7	L	02, 06				[MGQ]
		1	7	L	12, 15, 16				[MGQ]
3									RETAINER, Hood Ornament
	5096 429AA	2	2, 6	L	01, 02, 06				[MG4-58N=MGQ]
		2	2, 6	L	11, 12, 14, 15, 16				[MG4-58N=MGQ]
		2	2, 6	L	51, 52, 54, 55, 56				[MG4-58N=MGQ]
		2	3, 7	L	02, 06				[MG4-58N=MGQ]
		2	3, 7	L	12, 15, 16				[MG4-58N=MGQ]
4									NAMEPLATE, Hood
	5104 449AA	1	6	L	01, 02, 06				[MGQ]

Refer to Model Legend Information Bookmark

Nameplates and Decals
Figure EVA-120

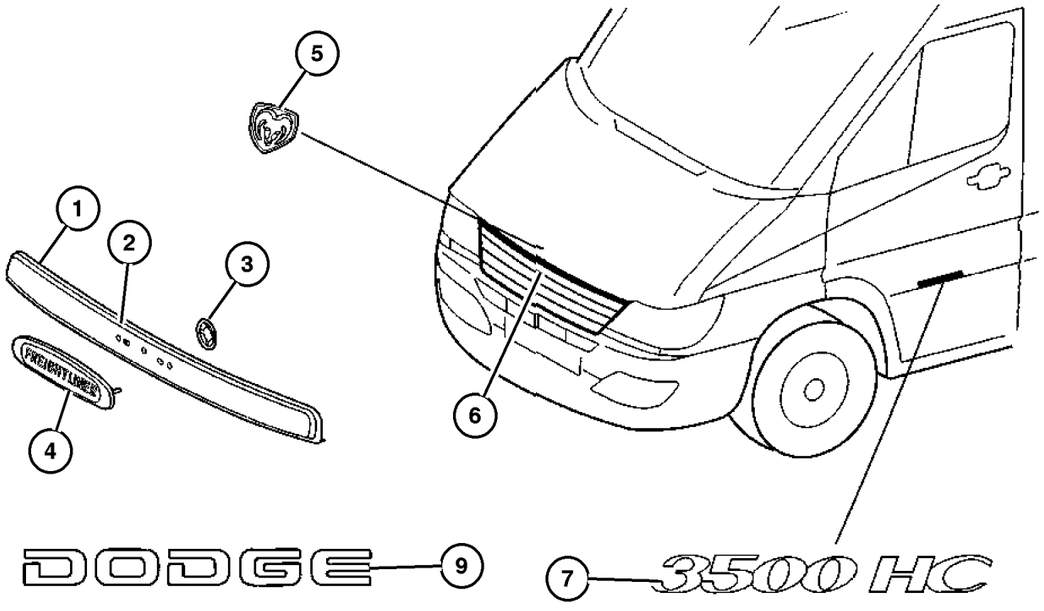

ITEM	PART NUMBER	QTY	LINE	SERIES	BODY	ENGINE	TRANS	TRIM	DESCRIPTION
		1	6	L	11, 12, 14, 15, 16				[MGQ]
		1	6	L	51, 52, 54, 55, 56				[MGQ]
		1	7	L	02, 06				[MGQ]
		1	7	L	12, 15, 16				[MGQ]
5									MEDALLION, Ram Head
	52851 538AA	1	2	L	01, 02, 06				[MG4-58N]
		1	2	L	11, 12, 14, 15, 16				[MG4-58N]
		1	2	L	51, 52, 54, 55, 56				[MG4-58N]
		1	3	L	02, 06				[MG4-58N]
		1	3	L	12, 15, 16				[MG4-58N]
6									GRILLE, Radiator, See Group 7, (NOT SERVICED) (Not Serviced)
7									NAMEPLATE
	5124 314AA	2	7	L	15, 16				[3500 SHC]
	5124 315AA	2	7	L	12				[3500HC]
	5124 316AA	2	7	L	02, 06				[3500C]
	5132 136AA	2	6	L	14, 15, 16				[2500 SHC]
		2	6	L	54, 55, 56				[2500 SHC]
-8									NAMEPLATE, Rear Door
	5104 451AA-	1	6	L	01, 02, 06				[MGQ]
		1	6	L	11, 12, 14, 15, 16				[MGQ]
		1	6	L	51, 52, 54, 55, 56				[MGQ]
		1	7	L	02, 06				[MGQ]
		1	7	L	12, 15, 16				[MGQ]
9									NAMEPLATE, Dodge

Refer to Model Legend Information Bookmark

Nameplates and Decals
Figure EVA-120

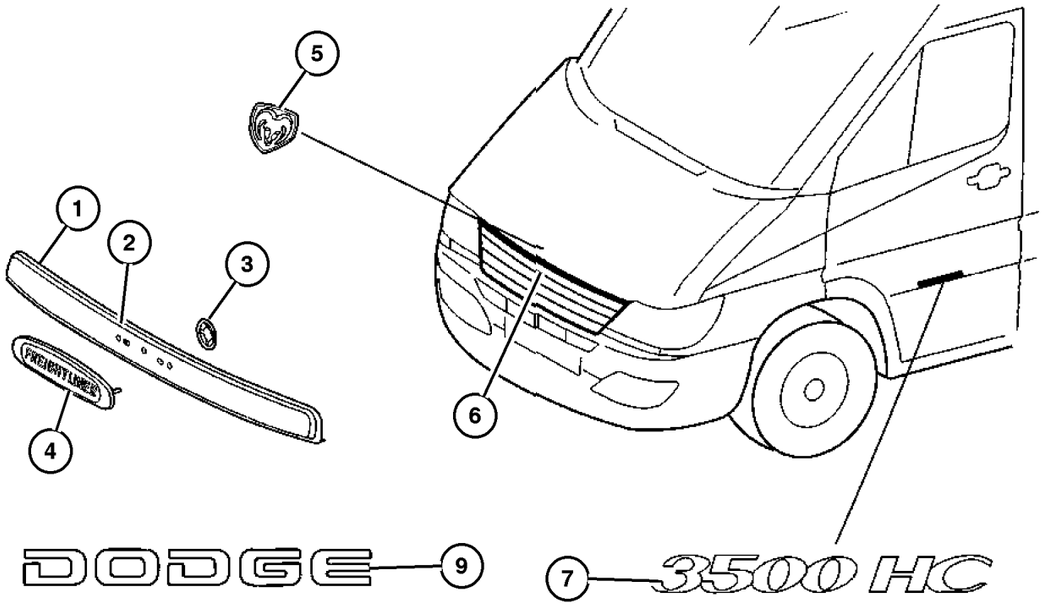

ITEM	PART NUMBER	QTY	LINE	SERIES	BODY	ENGINE	TRANS	TRIM	DESCRIPTION
	55077 300AA	1	2	L	01, 02, 06				[MG4-58N]
		1	2	L	11, 12, 14, 15, 16				[MG4-58N]
		1	2	L	51, 52, 54, 55, 56				[MG4-58N]
		1	3	L	02, 06				[MG4-58N]
		1	3	L	12, 15, 16				[MG4-58N]
-10									NAMEPLATE, Powered By Mercedes
	5132 137AA-	2	6	L	11, 12				
		2	6	L	51, 52				

Refer to Model Legend Information Bookmark

Exterior Moldings
Figure EVA-210

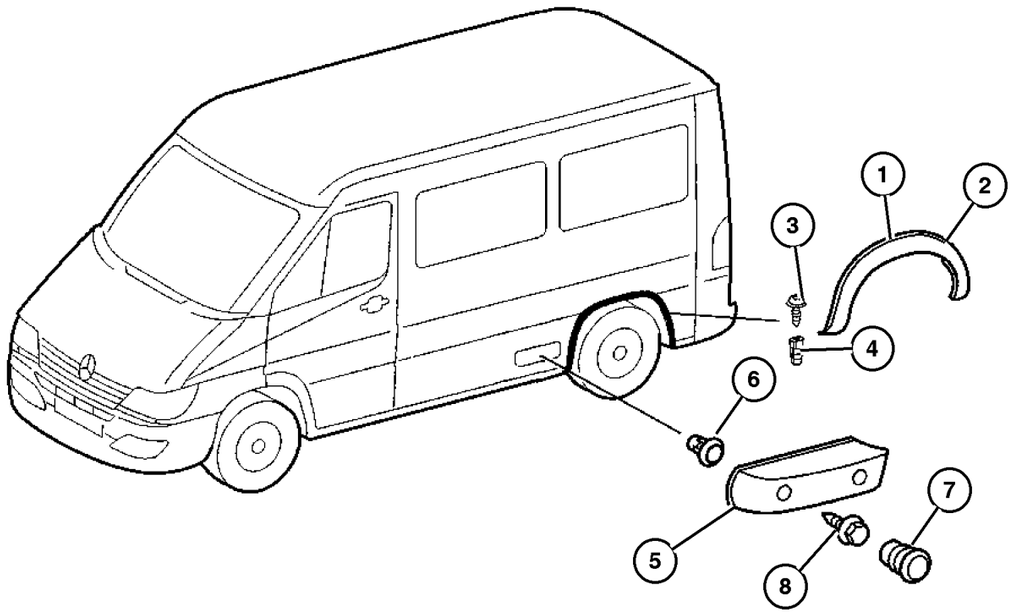

ITEM	PART NUMBER	QTY	LINE	SERIES	BODY	ENGINE	TRANS	TRIM	DESCRIPTION
NOTE:									
Line Code [2 & 3] Are For [Dodge Sprinter] Only									
Line Code [6 & 7] Are For [Freightliner] Only									
Sales Codes:									
[WDG] = 16x6 Steel Wheels									
1									MOLDING, Wheel Opening Flare
	5132 499AA	2	2, 6	L	11, 12, 14, 15, 16				[WDG]
		2	2, 6	L	51, 52, 54, 55, 56				[WDG]
2	5125 142AA	2	3, 7	L	12, 15, 16				MOLDING, Wheel Opening Flare
3									SCREW
	6104 614AA	16	2, 6	L	11, 12, 14, 15, 16				
		16	2, 6	L	51, 52, 54, 55, 56				
		16	3, 7	L	12, 15, 16				
4									NUT, Plastic Snap-in
	5098 837AB	2	2, 6	L	01, 02, 06				
		2	2, 6	L	11, 12, 14, 15, 16				
		2	2, 6	L	51, 52, 54, 55, 56				
		2	3, 7	L	02, 06				
		16	3, 7	L	12, 15, 16				
5									MOLDING, Quarter Trim
	5123 564AA	1	3, 7	L	12, 15, 16				Right
	5123 563AA	1	3, 7	L	12, 15, 16				Left
6	5125 550AA	4	3, 7	L	12, 15, 16				RETAINER
7	5126 001AA	4	3, 7	L	12, 15, 16				PLUG, Cover
8									SCREW

Refer to Model Legend Information Bookmark

AR = Use as required - = Non illustrated part # = New this model year **March 3, 2006**

« RETURN TO GROUP INDEX »

Exterior Moldings
Figure EVA-210

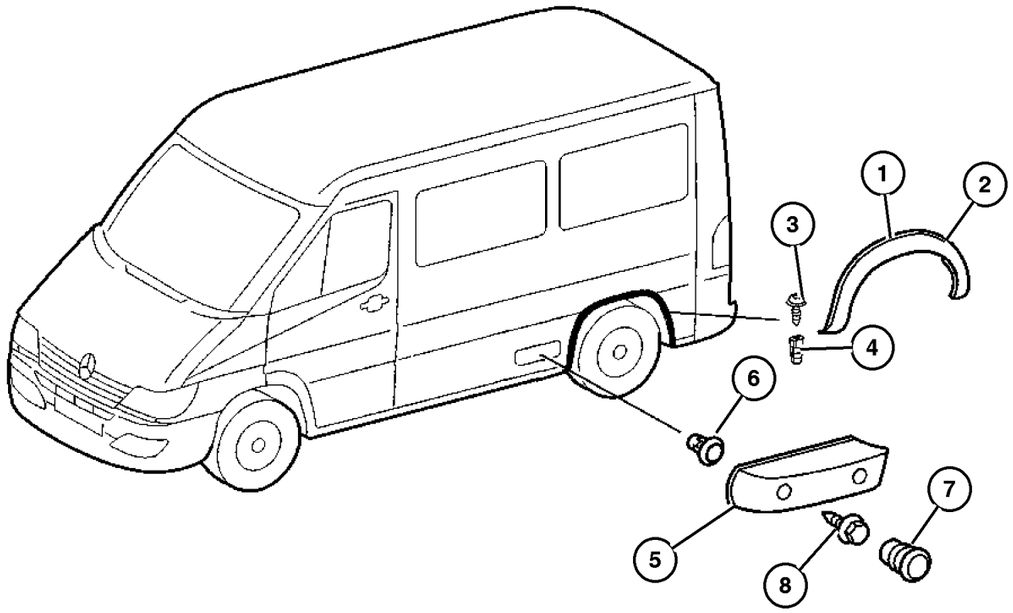

ITEM	PART NUMBER	QTY	LINE	SERIES	BODY	ENGINE	TRANS	TRIM	DESCRIPTION
	6104 614AA	16	2, 6	L	11, 12, 14, 15, 16				
		16	2, 6	L	51, 52, 54, 55, 56				
		16	3, 7	L	12, 15, 16				
-9									WASHER
	5104 639AA-	99	2, 6	L	11, 12, 14, 15, 16				
		99	2, 6	L	51, 52, 54, 55, 56				
		16	3, 7	L	12, 15, 16				

Refer to Model Legend Information Bookmark

AR = Use as required - = Non illustrated part # = New this model year

March 3, 2006

« RETURN TO GROUP INDEX

«

Group – IVA

Interior Trim

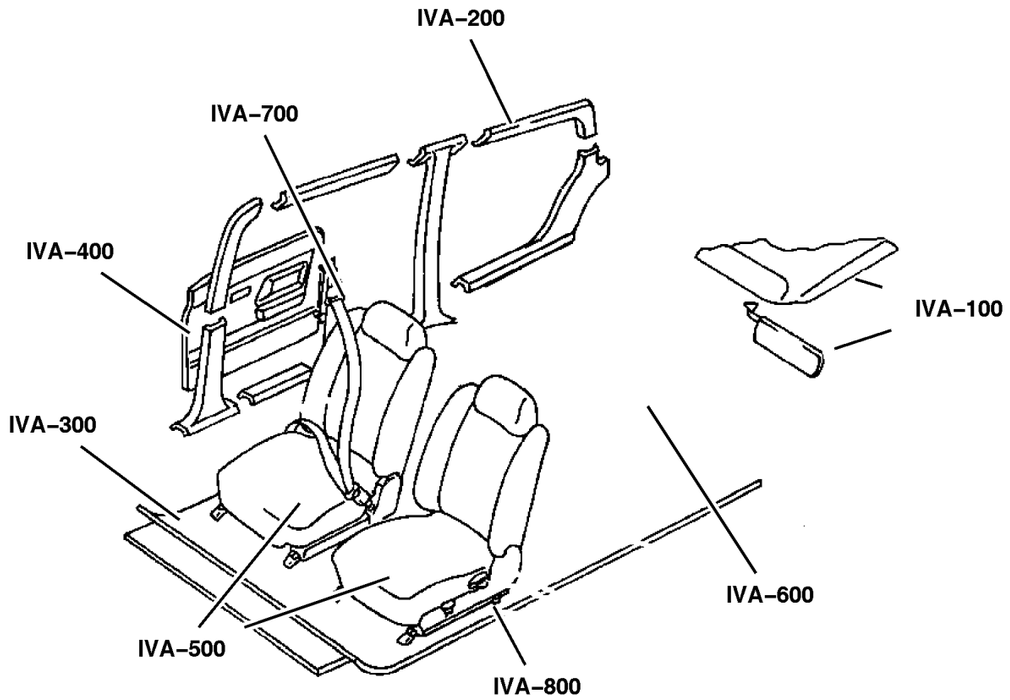

IVA–100 Headliner and Visor	**IVA–200** Moldings, Scuff Plates	**IVA–300** Carpet	**IVA–400** Door Trim Panels–Front and Sliding
IVA–500 Front Seats and Attaching Parts	**IVA–600** Rear Seats	**IVA–700** Seat Belts–Front and Rear	

GROUP IVA - Interior Trim

Illustration Title — Group-Fig. No.

Headliner and Visor
Headliner, Low Roof . . . Fig. IVA-110
Headliner, High Roof . . . Fig. IVA-115
Sunvisors, Grabhandles, Shelf and Attaching Parts . . . Fig. IVA-120

Moldings, Scuff Plates
Inner Panels - Fabric . . . Fig. IVA-210
Inner Panels - Cab . . . Fig. IVA-215
Inner Panels - Plywood . . . Fig. IVA-220
Inner Panel, Hard Fiber . . . Fig. IVA-221
Inner Panels . . . Fig. IVA-225
Inner Paneling Window - Pillar In Cab . . . Fig. IVA-230
Cargo Retainers - Without Windows . . . Fig. IVA-235
Cargo Retainers - With Windows . . . Fig. IVA-240
Rear Pillar Inner Panel . . . Fig. IVA-245
Cowl Panel - Silencer . . . Fig. IVA-250
Partition Panel . . . Fig. IVA-255
Partition Wall and Sliding Door . . . Fig. IVA-260

Carpet
Carpet - Floor . . . Fig. IVA-310
Floor Lining, Entry Paneling & Footrest . . . Fig. IVA-315
Floor - Rubber . . . Fig. IVA-320
Floor - Wooden . . . Fig. IVA-330
Insulation - Carpet . . . Fig. IVA-340
Insulation Floor . . . Fig. IVA-350

Door Trim Panels-Front and Sliding
Front Door Trim . . . Fig. IVA-410
Sliding Door Trim . . . Fig. IVA-420
Rear Dual Door Trim . . . Fig. IVA-430

Front Seats and Attaching Parts
Front Seat - Venice . . . Fig. IVA-510
Front Seat, Trim Code [B7], Santos . . . Fig. IVA-515
Front Seat - Catano . . . Fig. IVA-520
Front Seat - Attaching Parts . . . Fig. IVA-525
Front Seat - Attaching Parts - Riser . . . Fig. IVA-530
Front Seat - Attaching Parts . . . Fig. IVA-535

Rear Seats
Rear Seat - 2 Passenger . . . Fig. IVA-610
Rear Seat - 3 Passenger . . . Fig. IVA-615
Attaching Parts - 3rd Passenger Seat . . . Fig. IVA-620

Seat Belts-Front and Rear
Seat Belt - Front . . . Fig. IVA-710
Seat Belt - Second Row . . . Fig. IVA-720

Headliner, Low Roof
Figure IVA-110

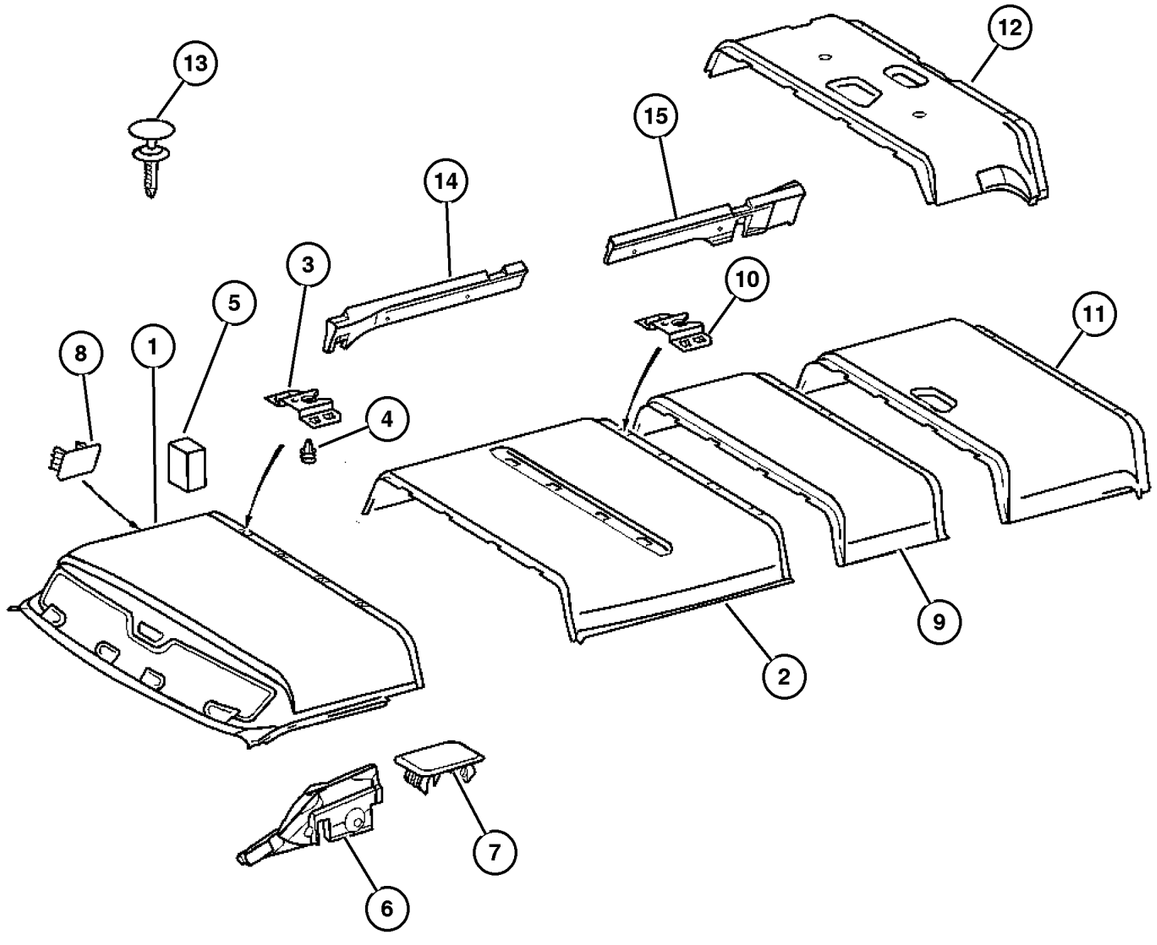

ITEM	PART NUMBER	QTY	LINE	SERIES	BODY	ENGINE	TRANS	TRIM	DESCRIPTION
1									HEADLINER, Front
	5123 465AA	1	2, 6	L	16				Without Sunroof,With Cargo Partition
		1	2, 6	L	56				Without Sunroof,With Cargo Partition
		1	3, 7	L	16				Without Sunroof,With Cargo Partition
	5123 470AA	1	2, 6	L	16				With Sunroof and Cargo Partition
		1	2, 6	L	56				With Sunroof and Cargo Partition
		1	3, 7	L	16				With Sunroof and Cargo Partition
2									HEADLINER, Center
	5123 093AA	1	2, 6	L	11, 12				With Right Sliding Door
		1	2, 6	L	51, 52				With Right Sliding Door
		1	3, 7	L	15				With Right Sliding Door
	5123 095AA	1	2, 6	L	11, 12				With Left Sliding Door
		1	2, 6	L	51, 52				With Left Sliding Door
		1	3, 7	L	15				With Left Sliding Door
	5123 097AA	1	2, 6	L	11, 12				With Right & Left Sliding Door
		1	2, 6	L	51, 52				With Right & Left Sliding Door
		1	3, 7	L	15				With Right & Left Sliding Door
3									BRACKET, Headliner to Roof Rail
	5123 436AA	4	2, 6	L	11, 12, 14, 15, 16				
		4	2, 6	L	51, 52, 54, 55, 56				
		4	3, 7	L	12, 15, 16				
4									CLIP, Headlining
	5125 569AA	4	2, 6	L	11, 12, 14, 15, 16				
		4	2, 6	L	51, 52, 54, 55, 56				
		4	3, 7	L	12, 15, 16				
5									PAD, headlining
	5123 547AA	2	2, 6	L	11, 12, 14, 15, 16				
		2	2, 6	L	51, 52, 54, 55, 56				

Refer to Model Legend Information Bookmark

AR = Use as required - = Non illustrated part # = New this model year

March 3, 2006

« RETURN TO GROUP INDEX

»

Headliner, Low Roof
Figure IVA-110

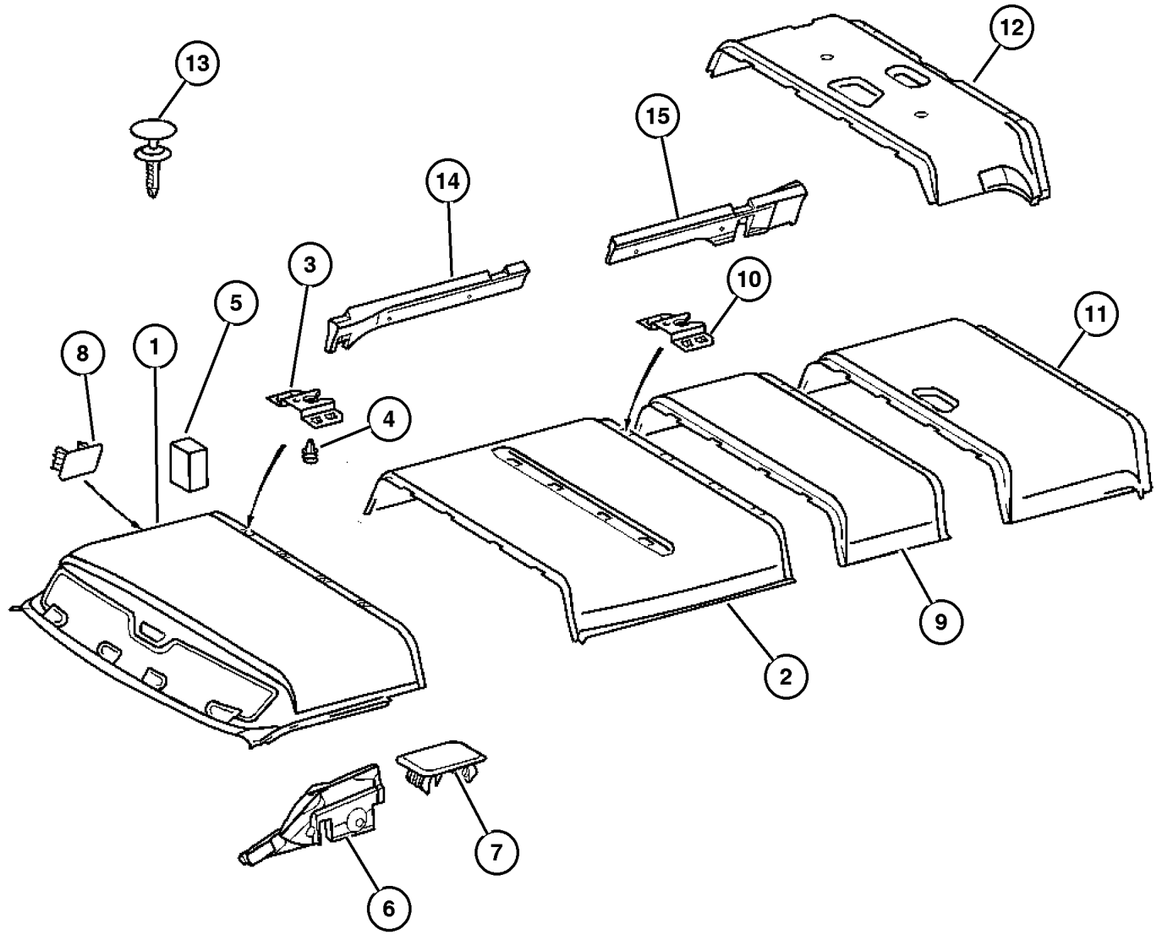

ITEM	PART NUMBER	QTY	LINE	SERIES	BODY	ENGINE	TRANS	TRIM	DESCRIPTION
		1	3, 7	L	12, 15, 16				
6									FLOCK, Nylon
	5123 496AA	1	2, 6	L	11, 12, 14, 15, 16				Left
		1	2, 6	L	51, 52, 54, 55, 56				Left
		1	3, 7	L	12, 15, 16				Left
	5123 497AA	1	2, 6	L	11, 12, 14, 15, 16				Right
		1	2, 6	L	51, 52, 54, 55, 56				Right
		1	3, 7	L	15				Right
		1	3, 7	L	16				Right
7									CLIP, Headlining
	5125 569AA	8	2, 6	L	11, 12, 14, 15, 16				
		8	2, 6	L	51, 52, 54, 55, 56				
		4	3, 7	L	12, 15, 16				
8									PLUG, Headliner
	1BH88 CSTAA	2	2, 6	L	14, 15, 16				
		2	2, 6	L	11, 12				
		2	2, 6	L	54, 55, 56				
		2	2, 6	L	51, 52				
		2	3, 7	L	15, 16				
		2	3, 7	L	12				
9									HEADLINER, Center
	5123 107AA	1	2, 6	L	11, 12				With Interior Lamp
		1	2, 6	L	51, 52				With Interior Lamp
		1	3, 7	L	15				With Interior Lamp
	5123 140AA	1	2, 6	L	12				With Sunroof
		1	2, 6	L	52				With Sunroof
		1	3, 7	L	15				With Sunroof
10									BRACKET

Refer to Model Legend Information Bookmark

Headliner, Low Roof
Figure IVA-110

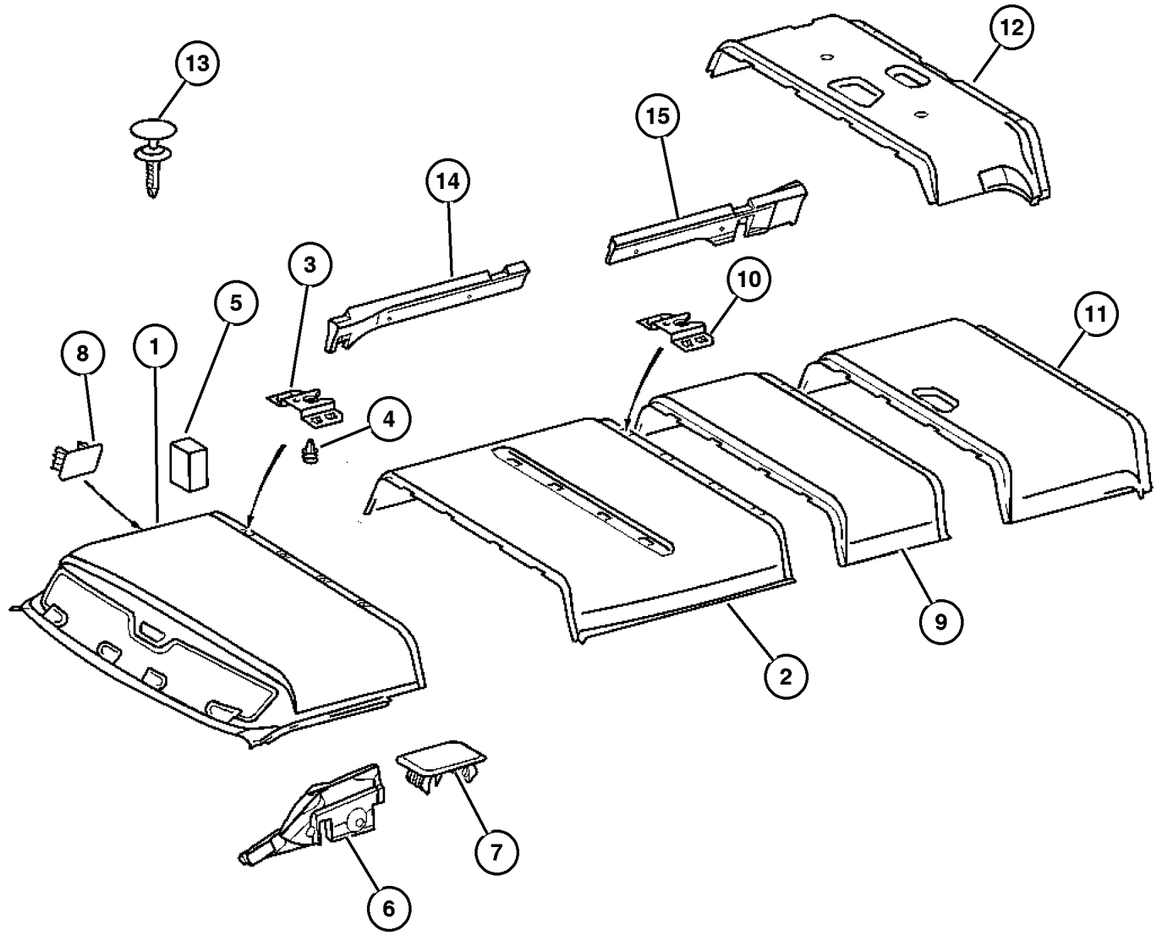

ITEM	PART NUMBER	QTY	LINE	SERIES	BODY	ENGINE	TRANS	TRIM	DESCRIPTION
	5123 436AA	4	2, 6	L	11, 12, 14, 15, 16				
		4	2, 6	L	51, 52, 54, 55, 56				
		4	3, 7	L	12, 15, 16				
11									HEADLINER, Rear
	5123 108AA	1	2, 6	L	11, 12				
		1	2, 6	L	51, 52				
		1	3, 7	L	15				
12									PANEL, Quarter
	5123 155AA	1	2, 6	L	12				
		1	2, 6	L	52				
		1	3, 7	L	15				
13									RIVET
	5104 541AA	2	2, 6	L	11, 12, 14, 15, 16				Headliner to Rear Roof Rail
		2	2, 6	L	51, 52, 54, 55, 56				Headliner to Rear Roof Rail
		2	3, 7	L	12, 15				Headliner to Rear Roof Rail
	1BH98 CSTAA	2	2, 6	L	11, 12, 14, 15, 16				Paneling to Roof Rear Rail
		2	2, 6	L	51, 52, 54, 55, 56				
		2	3, 7	L	12, 15				
14	5104 297AA	1	2, 6	L	51, 52				FLOCK, Nylon
15									FLOCK, Nylon
	5104 298AA	1	2, 6	L	51, 52				
		1	3, 7	L	12, 15, 16				
-16									FLOCK, Nylon, Spacer
	5123 510AA-	1	2, 6	L	14, 15, 16				
		1	3, 7	L	15, 16				
-17									FLOCK, Nylon, Spacer
	5123 512AA-	1	2, 6	L	14, 15, 16				
		1	3, 7	L	15, 16				
-18									SPACER, Foam Headliner

Refer to Model Legend Information Bookmark

Headliner, Low Roof
Figure IVA-110

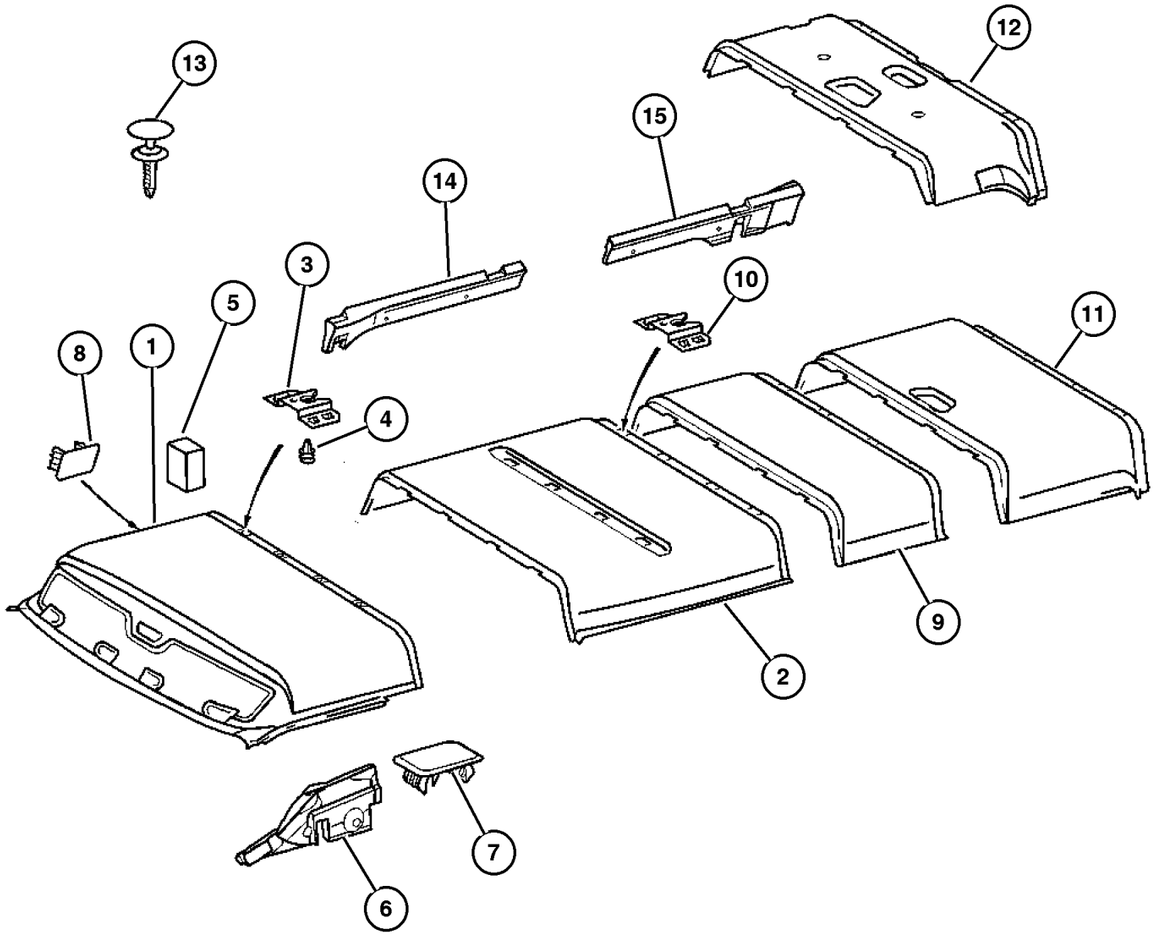

ITEM	PART NUMBER	QTY	LINE	SERIES	BODY	ENGINE	TRANS	TRIM	DESCRIPTION
	5123 514AA-	1	2, 6	L	14, 15, 16				
		1	3, 7	L	15, 16				
-19									SPACER, Foam Headliner
	5123 516AA-	1	2, 6	L	14, 15, 16				
		1	3, 7	L	15, 16				

Refer to Model Legend Information Bookmark

Headliner, High Roof
Figure IVA-115

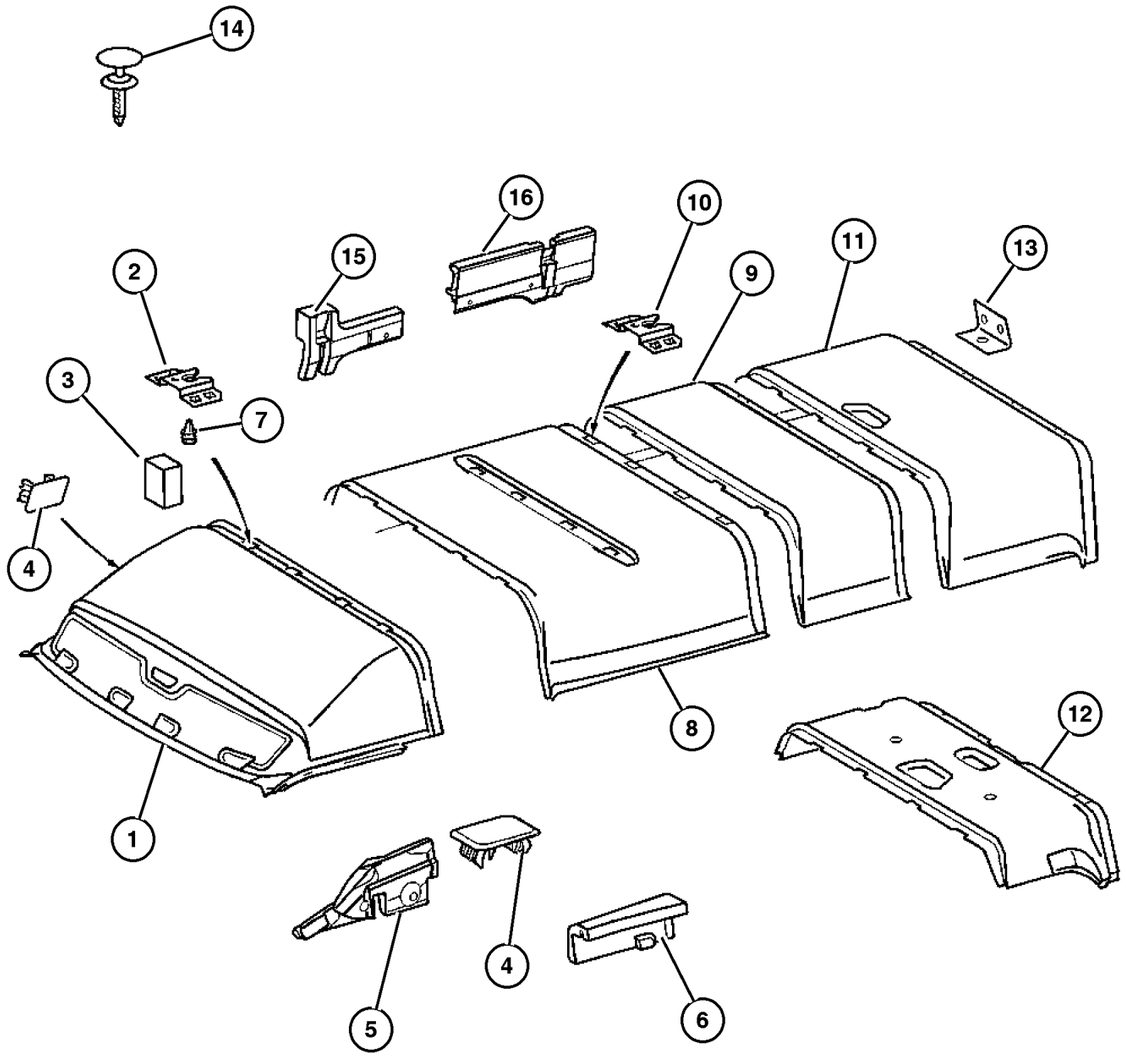

ITEM	PART NUMBER	QTY	LINE	SERIES	BODY	ENGINE	TRANS	TRIM	DESCRIPTION
Sales Code:									
[XJY] = Cargo Partition with Sliding Door									
1									HEADLINER, Front
	5104 300AA	1	2, 6	L	16				With Sliding Door [XJY]
		1	2, 6	L	56				With Sliding Door [XJY]
		1	3, 7	L	16				With Sliding Door [XJY]
	5123 473AA	1	2, 6	L	16				Without Sliding Door [XJY]
		1	3, 7	L	16				Without Sliding Door [XJY]
2									BRACKET
	5123 436AA	4	2, 6	L	11, 12, 14, 15, 16				
		4	2, 6	L	51, 52, 54, 55, 56				
		4	3, 7	L	12, 15, 16				
3									PAD, headlining
	5123 547AA	2	2, 6	L	11, 12, 14, 15, 16				
		2	2, 6	L	51, 52, 54, 55, 56				
		1	3, 7	L	12, 15, 16				
4									PLUG, Headliner
	1BH88 CSTAA	2	2, 6	L	14, 15, 16				
		2	2, 6	L	11, 12				
		2	2, 6	L	54, 55, 56				
		2	2, 6	L	51, 52				
		2	3, 7	L	15, 16				
		2	3, 7	L	12				
5									FLOCK, Nylon
	5123 496AA	1	2, 6	L	11, 12, 14, 15, 16				Left
		1	2, 6	L	51, 52, 54, 55, 56				Left
		1	3, 7	L	12, 15, 16				Left

Refer to Model Legend Information Bookmark

Headliner, High Roof
Figure IVA-115

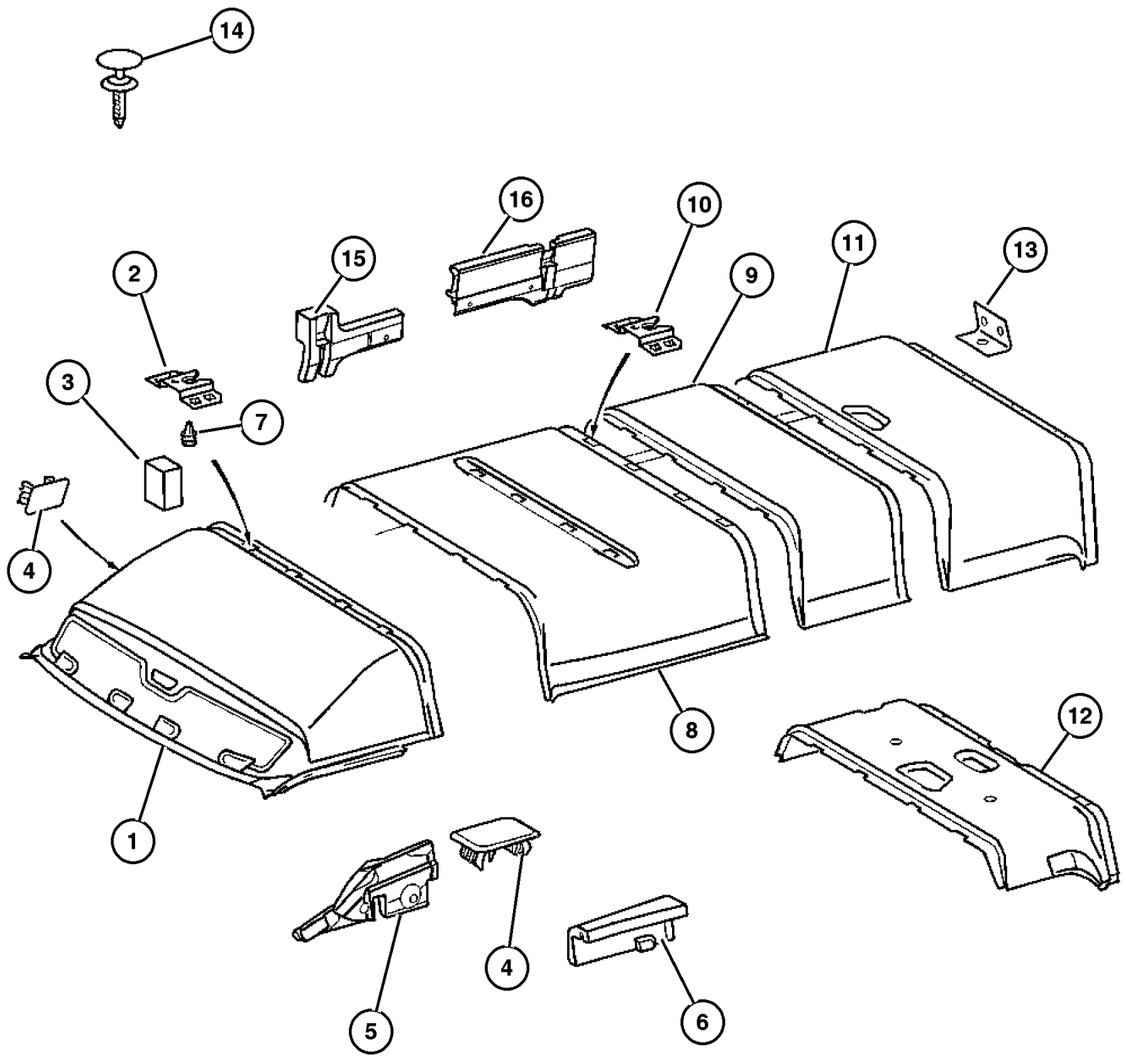

ITEM	PART NUMBER	QTY	LINE	SERIES	BODY	ENGINE	TRANS	TRIM	DESCRIPTION
	5123 497AA	1	2, 6	L	11, 12, 14, 15, 16				Right
		1	2, 6	L	51, 52, 54, 55, 56				Right
		1	3, 7	L	15				Right
		1	3, 7	L	16				Right
6									FLOCK, Nylon
	5123 498AA	1	2, 6	L	14, 15, 16				Left
		1	2, 6	L	54, 55, 56				Left
		1	3, 7	L	15, 16				Left
	5123 499AA	1	2, 6	L	14, 15, 16				Right
		1	2, 6	L	54, 55, 56				Right
		1	3, 7	L	15, 16				Right
7									CLIP, Headlining
	5125 569AA	4	2, 6	L	11, 12, 14, 15, 16				Paneling to Roof Rail
		4	2, 6	L	51, 52, 54, 55, 56				Paneling to Roof Rail
		4	3, 7	L	12, 15, 16				Paneling to Roof Rail
		8	2, 6	L	11, 12, 14, 15, 16				Headliner to Roof Bow
		8	2, 6	L	51, 52, 54, 55, 56				Headliner to Roof Bow
		8	3, 7	L	12, 15				Headliner to Roof Bow
		4	2, 6	L	11				Headliner to Rear Roof Rail
		8	2, 6	L	12				Headliner to Rear Roof Rail
		12	2, 6	L	16				Headliner to Rear Roof Rail
		4	2, 6	L	51				Headliner to Rear Roof Rail
		8	2, 6	L	52				Headliner to Rear Roof Rail
		12	2, 6	L	56				Headliner to Rear Roof Rail
		8	3, 7	L	12, 15				Headliner to Rear Roof Rail
		12	3, 7	L	16				Headliner to Rear Roof Rail
8									HEADLINER, Center

Refer to Model Legend Information Bookmark

Headliner, High Roof
Figure IVA-115

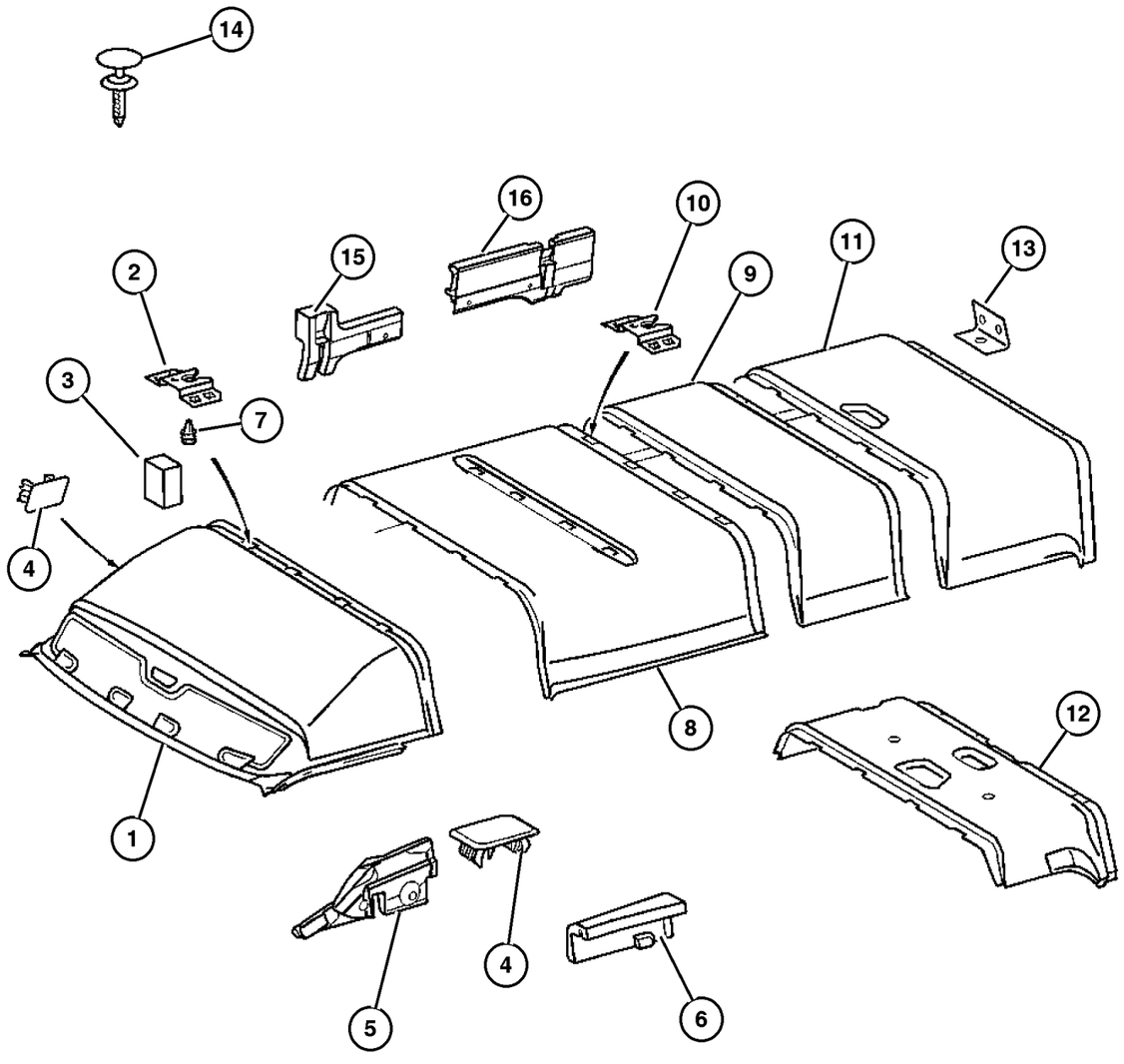

ITEM	PART NUMBER	QTY	LINE	SERIES	BODY	ENGINE	TRANS	TRIM	DESCRIPTION
	5104 278AA	1	2, 6	L	11, 12, 16				With Right Sliding Door
		1	2, 6	L	51, 52, 56				With Right Sliding Door
		1	3, 7	L	15, 16				With Right Sliding Door
	5123 112AA	1	2, 6	L	11, 12, 16				With Left Sliding Door
		1	2, 6	L	51, 52, 56				With Left Sliding Door
		1	3, 7	L	15, 16				With Left Sliding Door
	5123 114AA	1	2, 6	L	11, 12, 16				With Right & Left Sliding Door
		1	2, 6	L	51, 52, 56				With Right & Left Sliding Door
		1	3, 7	L	15, 16				With Right & Left Sliding Door
9									HEADLINER, Center
	5104 279AA	1	2, 6	L	12, 16				With Sunroof
		1	2, 6	L	52, 56				With Sunroof
		1	3, 7	L	15				With Sunroof
		2	3, 7	L	16				With Sunroof
	5123 141AA	1	2, 6	L	12, 16				With Interior Lamp
		1	2, 6	L	52, 56				With Interior Lamp
		1	3, 7	L	15, 16				With Interior Lamp
10									BRACKET
	5123 436AA	4	2, 6	L	11, 12, 14, 15, 16				Paneling to Roof Rail
		4	2, 6	L	51, 52, 54, 55, 56				
		4	3, 7	L	12, 15, 16				
11									HEADLINER, Rear
	5123 144AA	1	2, 6	L	16				
		1	2, 6	L	56				
		1	3, 7	L	16				
12									HEADLINER, Rear
	5104 277AA	1	2, 6	L	12				
		1	2, 6	L	52				
		1	3, 7	L	15				
13									BRACKET
	5123 437AA	1	2, 6	L	11, 12, 14, 15, 16				

Refer to Model Legend Information Bookmark

Headliner, High Roof
Figure IVA-115

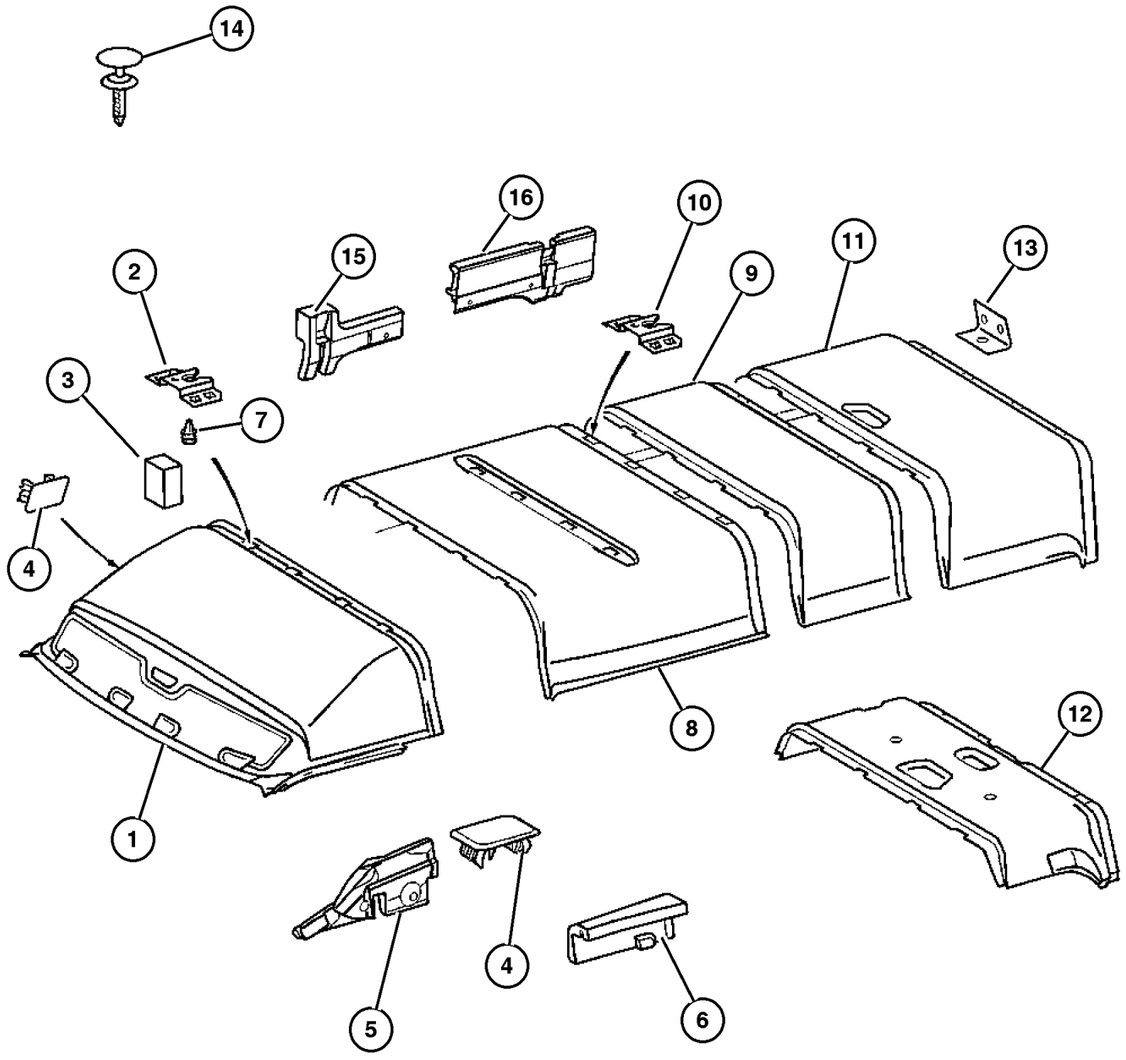

ITEM	PART NUMBER	QTY	LINE	SERIES	BODY	ENGINE	TRANS	TRIM	DESCRIPTION
		1	2, 6	L	51, 52, 54, 55, 56				
		1	3, 7	L	12, 15, 16				
14	1BH98 CSTAA	2	2, 6	L	11, 12, 14, 15, 16				RIVET
		2	2, 6	L	51, 52, 54, 55, 56				
		2	3, 7	L	12, 15				
15	5131 910AA	1	2, 6	L	54, 55, 56				FLOCK, Nylon
16	5104 299AA	1	2, 6	L	54, 55, 56				SPACER
		1	3, 7	L	12, 15, 16				
-17	5123 502AA-	1	2, 6	L	14, 15, 16				SPACER, Foam Headliner
		1	3, 7	L	15, 16				
-18	5123 504AA-	1	2, 6	L	14, 15, 16				SPACER, Foam Headliner
		1	3, 7	L	15, 16				
-19	5123 506AA-	1	2, 6	L	14, 15, 16				SPACER, Foam Headliner
		1	3, 7	L	15, 16				
-20	5123 508AA-	1	2, 6	L	14, 15, 16				SPACER, Foam Headliner
		1	3, 7	L	15, 16				

Refer to Model Legend Information Bookmark

Sunvisors, Grabhandles, Shelf and Attaching Parts
Figure IVA-120

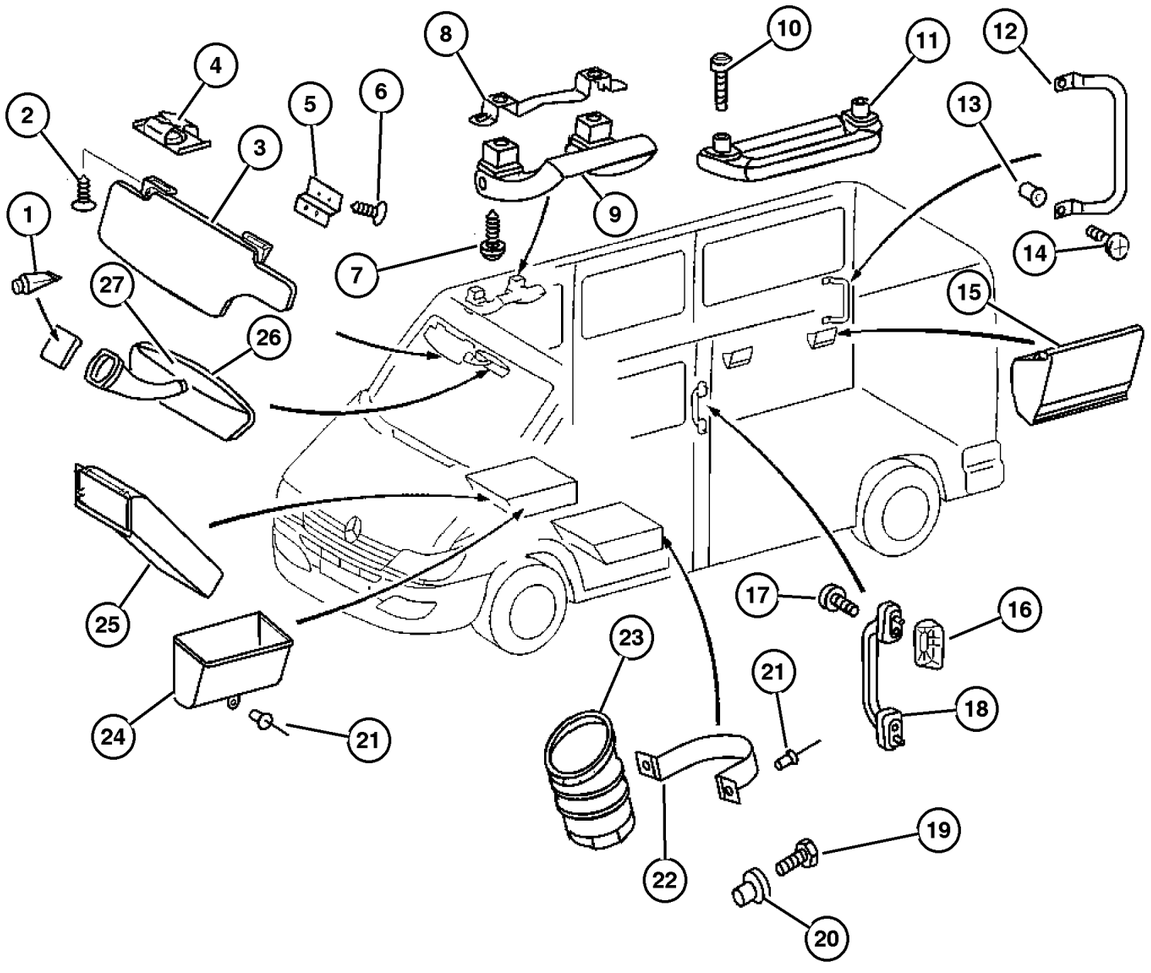

ITEM	PART NUMBER	QTY	LINE	SERIES	BODY	ENGINE	TRANS	TRIM	DESCRIPTION
1									ADHESIVE, (NOT SERVICED) (Not Serviced)
2	6104 005AA	2	2, 3, 6, 7	L					SCREW
3									VISOR
	5104 438AA	1	2, 6	L	01, 02, 06				Left
		1	2, 6	L	11, 12, 14, 15, 16				Left
		1	2, 6	L	51, 52, 54, 55, 56				Left
		1	3, 7	L	02, 06				Left
		1	3, 7	L	12, 15, 16				Left
	5104 439AA	1	2, 6	L	01, 02, 06				Right
		1	2, 6	L	11, 12, 14, 15, 16				Right
		1	2, 6	L	51, 52, 54, 55, 56				Right
		1	3, 7	L	02, 06				Right
		1	3, 7	L	12, 15, 16				Right
4									CLIP, Visor
	5125 854AA	8	2, 6	L	01, 02, 06				
		8	2, 6	L	11, 12, 14, 15, 16				
		8	2, 6	L	51, 52, 54, 55, 56				
		2	3, 7	L	02, 06				
		2	3, 7	L	12, 15, 16				
5									BRACKET, Trim
	5124 268AA	4	2, 6	L	11, 12, 14, 15, 16				
		4	2, 6	L	51, 52, 54, 55, 56				

Refer to Model Legend Information Bookmark

AR = Use as required - = Non illustrated part # = New this model year

March 3, 2006

« RETURN TO GROUP INDEX

»

Sunvisors, Grabhandles, Shelf and Attaching Parts
Figure IVA-120

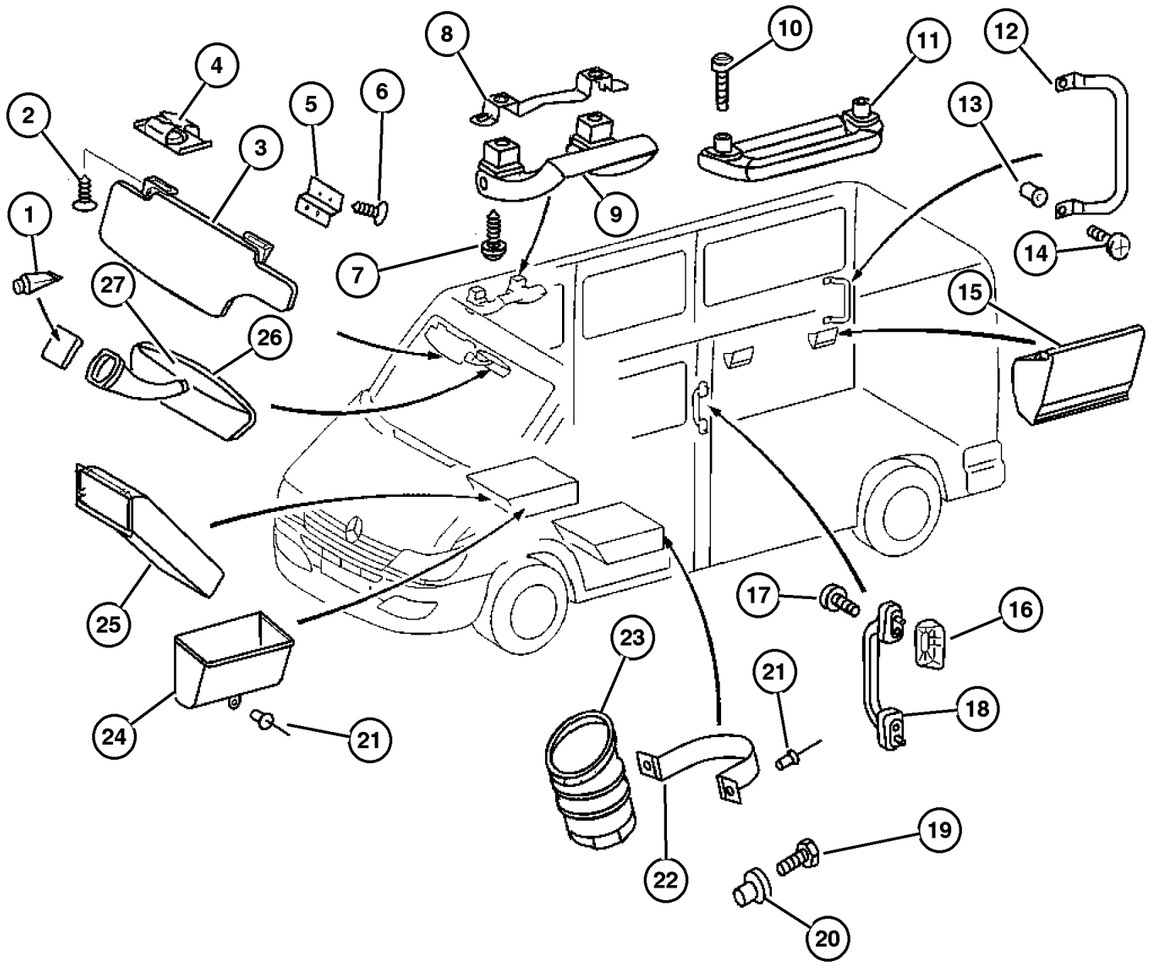

ITEM	PART NUMBER	QTY	LINE	SERIES	BODY	ENGINE	TRANS	TRIM	DESCRIPTION
		3	3, 7	L	12, 15, 16				
6	6104 505AA	8	2, 6	L	01, 02, 06				SCREW
		6	2, 6	L	11, 12, 14, 15, 16				
		8	2, 6	L	51, 52, 54, 55, 56				
		8	3, 7	L	02, 06				
		8	3, 7	L	12, 15, 16				
7	6104 574AA	2	2, 6	L	01, 02, 06				SCREW, Tapping
		2	2, 6	L	11, 12, 14, 15, 16				
		2	2, 6	L	51, 52, 54, 55, 56				
		3	3, 7	L	02, 06				
		3	3, 7	L	12, 15, 16				
8	5121 721AA	1	2, 6	L	11, 12, 14, 15, 16				BRACKET, Grab Handle
		1	2, 6	L	51, 52, 54, 55, 56				
		1	3, 7	L	12, 15, 16				
9	5104 437AA	1	2, 6	L	11, 12, 14, 15, 16				HANDLE, Grab
		1	2, 6	L	51, 52, 54, 55, 56				
		1	3, 7	L	12, 15, 16				
10									SCREW, (NOT SERVICED) (Not Serviced)

Refer to Model Legend Information Bookmark

AR = Use as required - = Non illustrated part # = New this model year

March 3, 2006

« RETURN TO GROUP INDEX

Sunvisors, Grabhandles, Shelf and Attaching Parts
Figure IVA-120

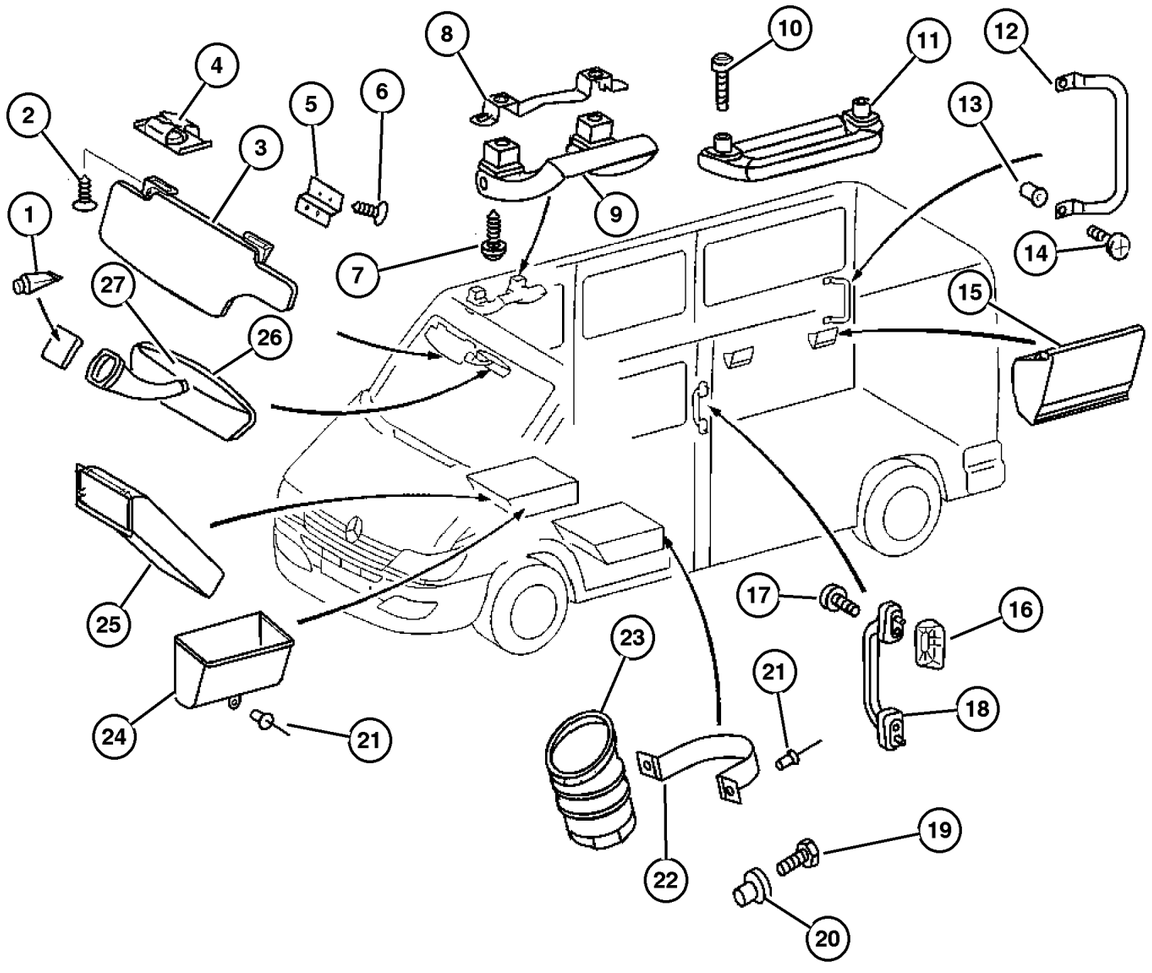

ITEM	PART NUMBER	QTY	LINE	SERIES	BODY	ENGINE	TRANS	TRIM	DESCRIPTION
11									HANDLE, Grab
	ZF48 CS8AA	1	2, 6	L	01, 02, 06			B7	
		1	3, 7	L	02, 06			B7	
12									HANDLE, Grab
	5104 448AA	2	2, 6	L	11, 12, 14, 15, 16				
		2	2, 6	L	51, 52, 54, 55, 56				
		2	3, 7	L	12, 15, 16				
13									NUTSERT, Rivet
	5104 678AA	2	2, 6	L	01, 02, 06				
		2	2, 6	L	11, 12, 14, 15, 16				
		2	2, 6	L	51, 52, 54, 55, 56				
		2	3, 7	L	12, 15, 16				
14									SCREW
	6104 153AA	2	2, 6	L	11, 12, 14, 15, 16				
		2	2, 6	L	51, 52, 54, 55, 56				
		2	3, 7	L	12, 15, 16				
15									ASHTRAY
	5124 222AA	2	2, 6	L	12, 15				
		2	2, 6	L	11, 14				
		2	2, 6	L	52, 55				
		2	2, 6	L	51, 54				
		4	3, 7	L	12, 15				
16									COVER, Assist Handle
	5124 285AA	2	2, 6	L	11, 12, 14, 15, 16				

Refer to Model Legend Information Bookmark

Sunvisors, Grabhandles, Shelf and Attaching Parts
Figure IVA-120

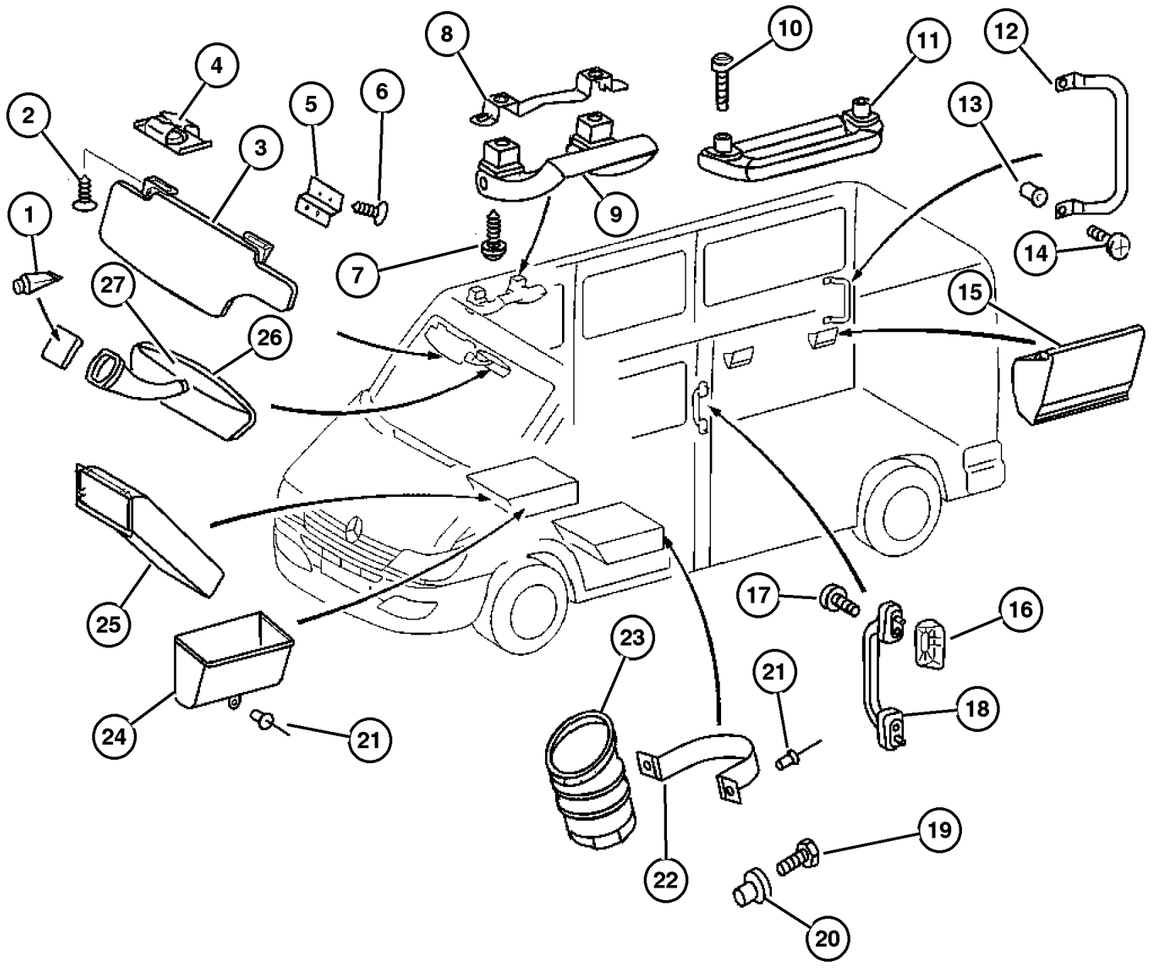

ITEM	PART NUMBER	QTY	LINE	SERIES	BODY	ENGINE	TRANS	TRIM	DESCRIPTION
		2	2, 6	L	51, 52, 54, 55, 56				
		2	3, 7	L	12, 15, 16				
17									SCREW
	6104 142AA	2	2, 6	L	01, 02, 06				
		2	2, 6	L	11, 12, 14, 15, 16				
		2	2, 6	L	51, 52, 54, 55, 56				
		2	3, 7	L	02, 06				
		2	3, 7	L	12, 15, 16				
18									HANDLE, Grab
	5103 676AA	2	2, 6	L	11, 12, 14, 15, 16				
		2	2, 6	L	51, 52, 54, 55, 56				
		1	3, 7	L	12, 15, 16				
19									SCREW
	5134 034AA	2	2, 6	L	01, 02, 06				
		2	2, 6	L	11, 12, 14, 15, 16				
		2	2, 6	L	51, 52, 54, 55, 56				
20									NUT
	5133 943AA	2	2, 6	L	01, 02, 06				
		2	2, 6	L	11, 12, 14, 15, 16				
		2	2, 6	L	51, 52, 54, 55, 56				
		99	3, 7	L	02, 06				

Refer to Model Legend Information Bookmark

Sunvisors, Grabhandles, Shelf and Attaching Parts
Figure IVA-120

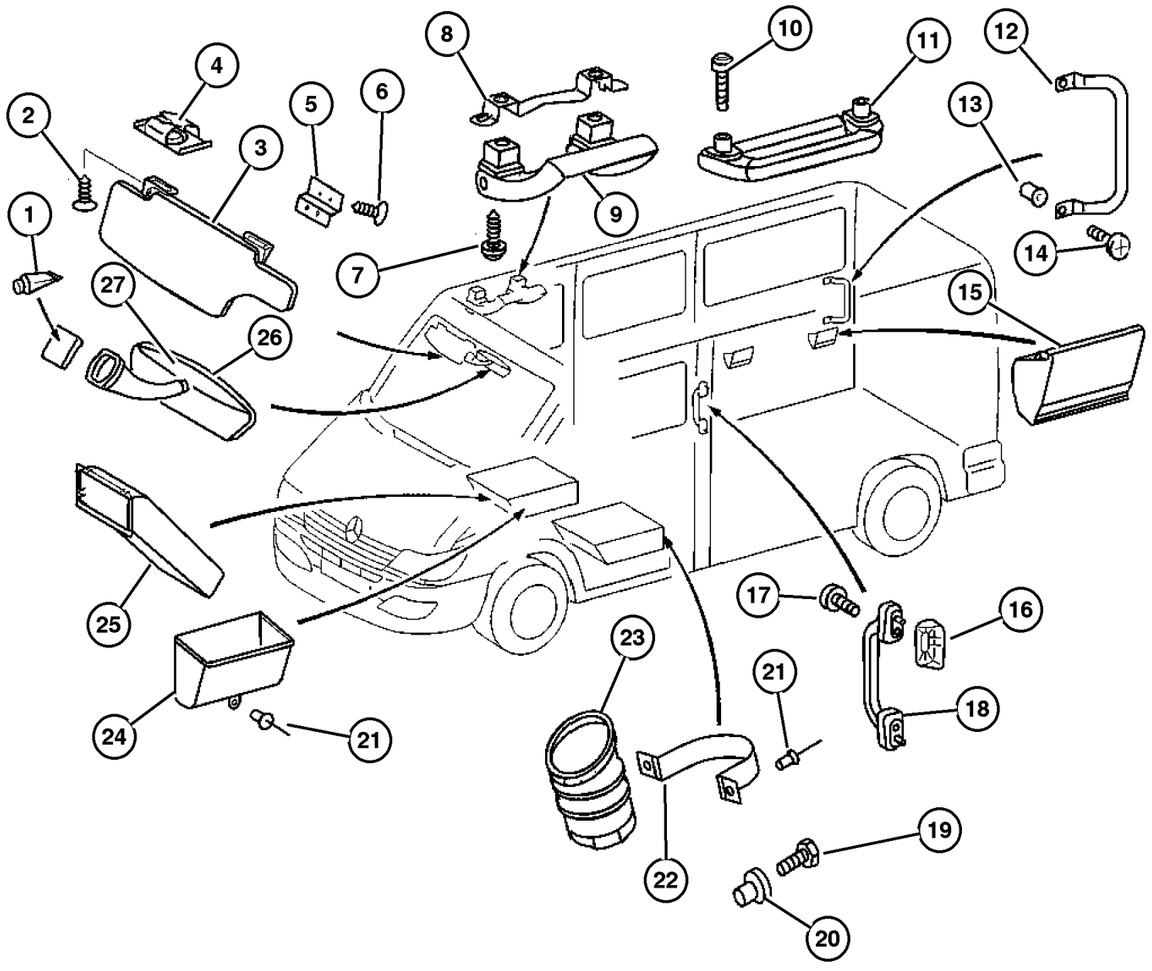

ITEM	PART NUMBER	QTY	LINE	SERIES	BODY	ENGINE	TRANS	TRIM	DESCRIPTION
		99	3, 7	L	12, 15, 16				
21	5133 934AA	1	2, 6	L	01, 02, 06				RIVET, M4.8
		1	2, 6	L	11, 12, 14, 15, 16				
		1	2, 6	L	51, 52, 54, 55, 56				
		1	3, 7	L	02, 06				
		1	3, 7	L	12, 15, 16				
22	5125 038AA	1	2, 6	L	11, 12, 14, 15, 16				BRACKET, Cup Holder
		1	2, 6	L	51, 52, 54, 55, 56				
		1	3, 7	L	12, 15, 16				
23	1AQ31 CSSAA	1	2, 6	L	11, 12, 14, 15, 16				HOLDER, Cup
		1	2, 6	L	51, 52, 54, 55, 56				
		1	3, 7	L	12, 15, 16				
24	5104 496AA	1	2, 6	L	01, 02, 06				BIN, Storage
		1	2, 6	L	11, 12, 14, 15, 16				
		1	2, 6	L	51, 52, 54, 55, 56				
		1	3, 7	L	02, 06				
		1	3, 7	L	12, 15, 16				
25									BIN, Storage, (NOT SERVICED) (Not Serviced)

Refer to Model Legend Information Bookmark

AR = Use as required - = Non illustrated part # = New this model year

March 3, 2006

« RETURN TO GROUP INDEX

Sunvisors, Grabhandles, Shelf and Attaching Parts
Figure IVA-120

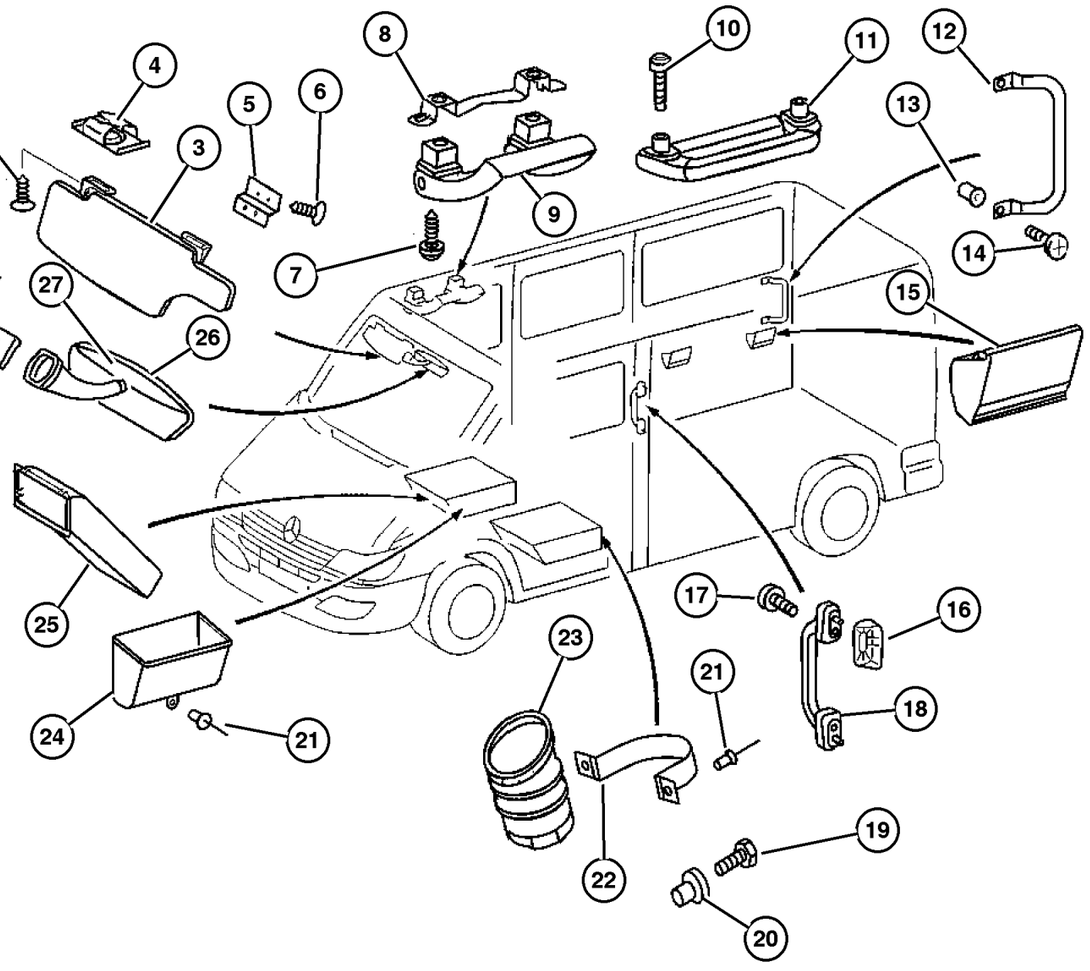

ITEM	PART NUMBER	QTY	LINE	SERIES	BODY	ENGINE	TRANS	TRIM	DESCRIPTION
26									MIRROR, Inside Rear View
	5104 435AA	1	2, 6	L	01, 02, 06				
		1	2, 6	L	11, 12, 14, 15, 16				
		1	2, 6	L	51, 52, 54, 55, 56				
		1	3, 7	L	02, 06				
		1	3, 7	L	12, 15, 16				
27									BUTTON, Rear View Mirror
	5104 241AA	1	2, 6	L	11, 12, 14, 15, 16				
		1	2, 6	L	51, 52, 54, 55, 56				
		1	3, 7	L	02, 06				
		1	3, 7	L	12, 15, 16				

Refer to Model Legend Information Bookmark

AR = Use as required - = Non illustrated part # = New this model year

March 3, 2006

« RETURN TO GROUP INDEX

Inner Panels - Fabric
Figure IVA-210

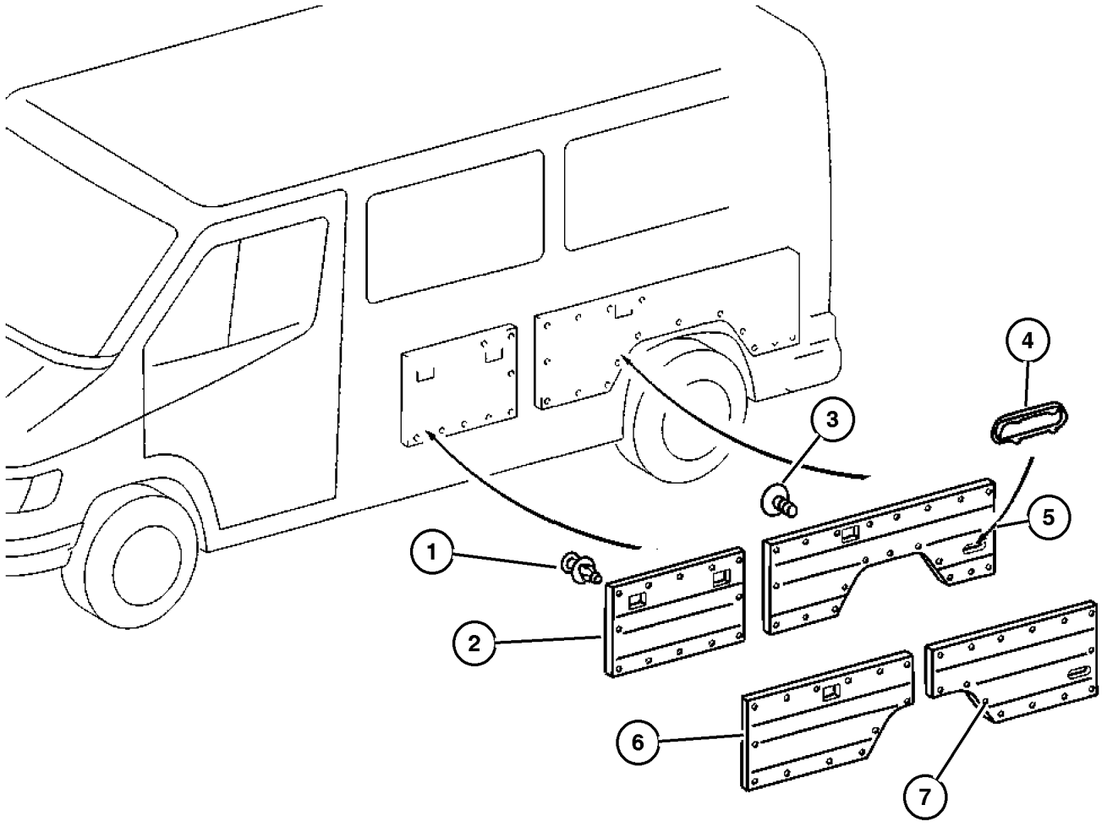

ITEM	PART NUMBER	QTY	LINE	SERIES	BODY	ENGINE	TRANS	TRIM	DESCRIPTION
1									PIN, Push
	6104 895AA	10	2, 6	L	11, 12, 14, 15, 16				
		10	2, 6	L	51, 52, 54, 55, 56				
		10	3, 7	L	12, 15, 16				
2									PANEL, Inner
	5123 006AA	1	2, 6	L	11, 12, 14, 15, 16				Left
		1	2, 6	L	51, 52, 54, 55, 56				Left
		1	3, 7	L	12, 15, 16				Left
	5123 007AA	1	2, 6	L	11, 12, 14, 15, 16				Right
		1	2, 6	L	51, 52, 54, 55, 56				Right
		1	3, 7	L	12, 15, 16				Right
3									PLUG, Rear Seatbelt Hole
	5125 988AA	4	2, 6	L	51, 54				
		4	2, 6	L	52, 55				
4		6	2, 6	L	56				EXHAUSTER, Quarter Panel
	5123 426AA	2	2, 6	L	01, 02, 06				
		2	2, 6	L	11, 12, 14, 15, 16				
		2	2, 6	L	51, 52, 54, 55, 56				
		2	3, 7	L	02, 06				
		2	3, 7	L	12, 15, 16				
5									PANEL, Quarter Trim
	5123 014AA	1	2, 6	L	12, 15				Used With Four Fold Loudspeakers
		1	2, 6	L	52, 55				Used With Four Fold Loudspeakers

Refer to Model Legend Information Bookmark

Inner Panels - Fabric
Figure IVA-210

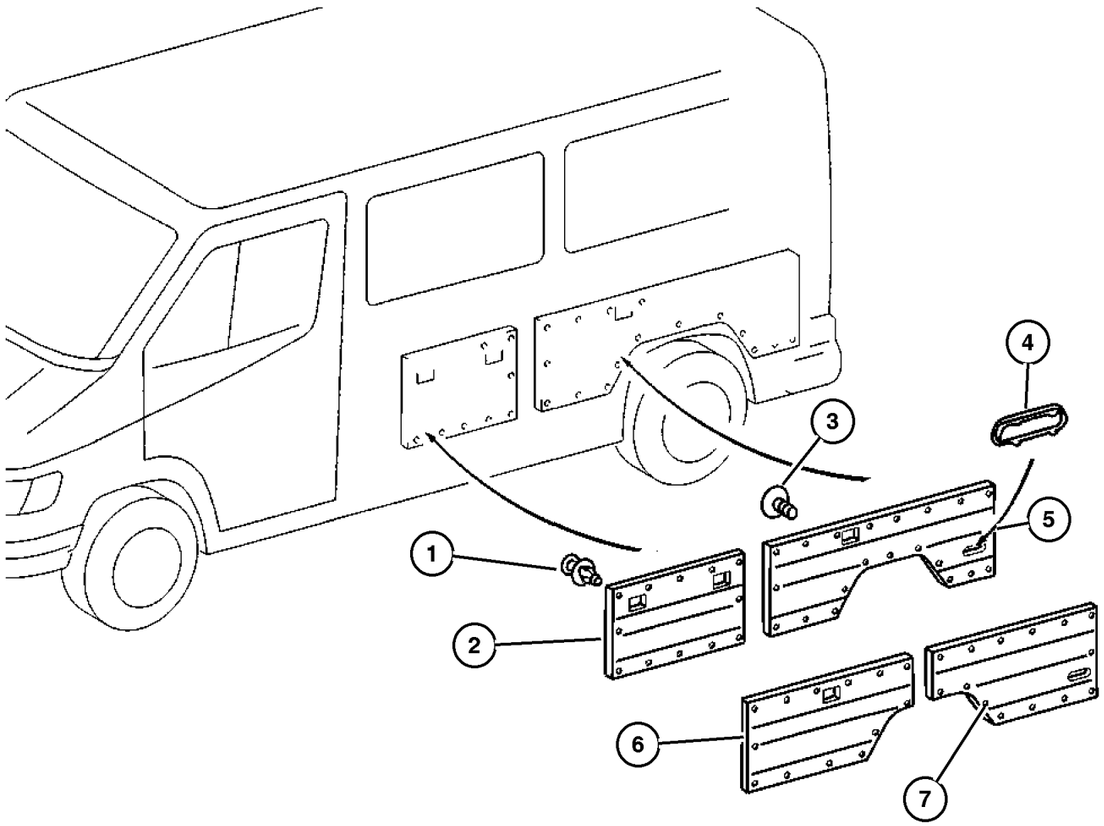

ITEM	PART NUMBER	QTY	LINE	SERIES	BODY	ENGINE	TRANS	TRIM	DESCRIPTION
		1	3, 7	L	12, 15				Used With Four Fold Loudspeakers
6									PANEL, Quarter Trim
	5123 020AA	1	2, 6	L	16				In Front Of Wheelhouse,Without Loudspeaker, Left
		1	2, 6	L	56				In Front Of Wheelhouse,Without Loudspeaker, Left
		1	3, 7	L	16				In Front Of Wheelhouse,Without Loudspeaker, Left
	5123 023AA	1	2, 6	L	16				In Front Of Wheelhouse,Without Loudspeaker, Right
		1	2, 6	L	56				In Front Of Wheelhouse,Without Loudspeaker, Right
		1	3, 7	L	16				In Front Of Wheelhouse,Without Loudspeaker, Right
	5123 029AA	1	2, 6	L	16				In Front Of Wheelhouse,With Loudspeaker, Left
		1	2, 6	L	56				In Front Of Wheelhouse,With Loudspeaker, Left
		1	3, 7	L	16				In Front Of Wheelhouse,With Loudspeaker, Left
	5123 032AA	1	2, 6	L	16				In Front Of Wheelhouse,With Loudspeaker, Right
		1	2, 6	L	56				In Front Of Wheelhouse,With Loudspeaker, Right
		1	3, 7	L	16				In Front Of Wheelhouse,With Loudspeaker, Right
7									PANEL, Quarter Trim
	5123 025AA	1	2, 6	L	11, 12, 14, 15, 16				Behind the Wheel Arch, Left
		1	2, 6	L	51, 52, 54, 55, 56				Behind the Wheel Arch, Left
		1	3, 7	L	12, 15, 16				Behind the Wheel Arch, Left
	5123 027AA	1	2, 6	L	11, 12, 14, 15, 16				Behind the Wheel Arch, Right
		1	2, 6	L	51, 52, 54, 55, 56				Behind the Wheel Arch, Right
		1	3, 7	L	12, 15, 16				Behind the Wheel Arch, Right

Refer to Model Legend Information Bookmark

Inner Panels - Cab
Figure IVA-215

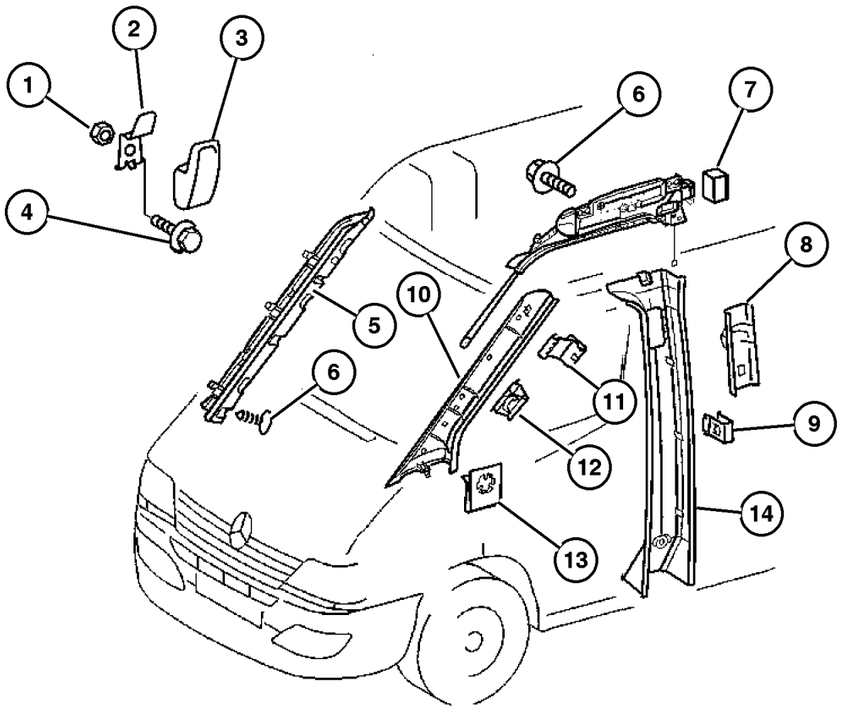

ITEM	PART NUMBER	QTY	LINE	SERIES	BODY	ENGINE	TRANS	TRIM	DESCRIPTION
1									NUT, Hex
	6104 724AA	1	2, 6	L	01, 02, 06				
		1	3, 7	L	02, 06				
2									HOOK, Coat
	5124 273AA	1	2, 6	L	01, 02, 06				
		1	3, 7	L	02, 06				
3									HANGER, coat
	ZF49 CS8AA	1	2, 6	L	01, 02, 06			B7	
		1	3, 7	L	02, 06			B7	
4									SCREW
	6104 172AA	1	2, 6	L	01, 02, 06				
		2	2, 6	L	11, 12, 14, 15, 16				
		2	2, 6	L	51, 52, 54, 55, 56				
		1	3, 7	L	02, 06				
5									FILLER
	5104 273AA	1	2, 6	L	11, 12, 14, 15, 16				Right
		1	2, 6	L	51, 52, 54, 55, 56				Right
		1	3, 7	L	12, 15, 16				Right
	5123 185AA	1	2, 6	L	11, 12, 14, 15, 16				Left
		1	2, 6	L	51, 52, 54, 55, 56				Left
		1	3, 7	L	12, 15, 16				Left
6									SCREW
	6104 610AA	5	2, 6	L	01, 02, 06				
		5	2, 6	L	11, 12, 14, 15, 16				

Refer to Model Legend Information Bookmark

AR = Use as required - = Non illustrated part # = New this model year

March 3, 2006

« RETURN TO GROUP INDEX

»

Inner Panels - Cab
Figure IVA-215

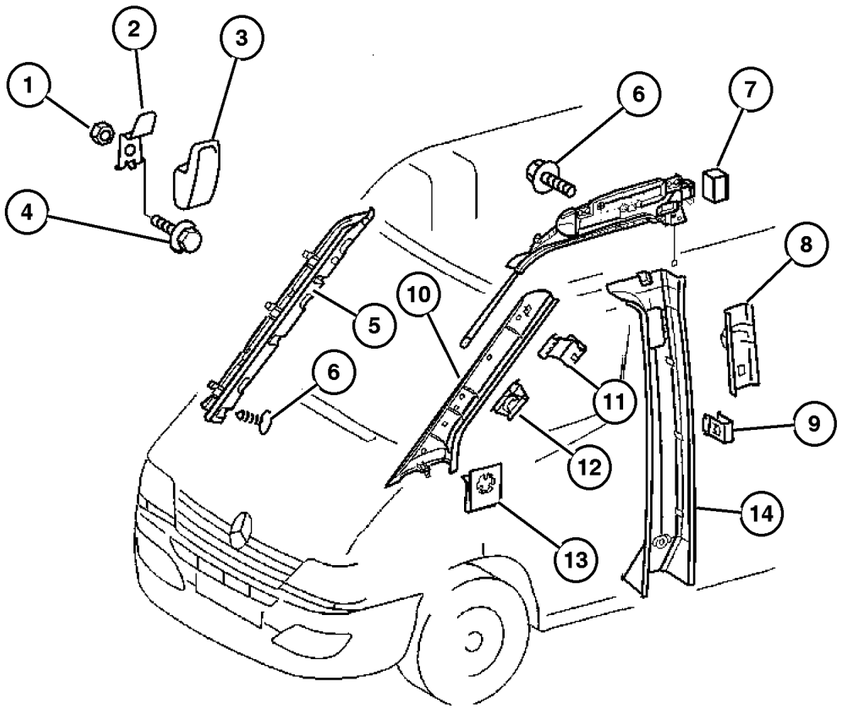

ITEM	PART NUMBER	QTY	LINE	SERIES	BODY	ENGINE	TRANS	TRIM	DESCRIPTION
		5	2, 6	L	51, 52, 54, 55, 56				
		5	3, 7	L	02, 06				
		5	3, 7	L	12, 15, 16				
7									SPACER, (NOT SERVICED) (Not Serviced)
8									COVER, Seat Belt Guide
	5104 275AA	1	2, 6	L	01, 02, 06				
		1	2, 6	L	11, 12, 14, 15, 16				
		1	2, 6	L	51, 52, 54, 55, 56				
9									CLIP, U Type
	5125 582AA	6	2, 6	L	11, 12, 14, 15, 16				
		6	2, 6	L	51, 52, 54, 55, 56				
		6	3, 7	L	02, 06				
10									PANEL, A Pillar Trim
	5104 276AA	1	2, 6	L	11, 12, 14, 15, 16				Left
		1	2, 6	L	51, 52, 54, 55, 56				Left
		1	3, 7	L	12, 15, 16				Left
	5123 043AA	1	2, 6	L	11, 12, 14, 15, 16				With Cell Phone Prep Package, Left
		1	2, 6	L	51, 52, 54, 55, 56				With Cell Phone Prep Package, Left
		1	3, 7	L	12, 15, 16				With Cell Phone Prep Package, Left
	5123 046AA	1	2, 6	L	11, 12, 14, 15, 16				Right

Refer to Model Legend Information Bookmark

Inner Panels - Cab
Figure IVA-215

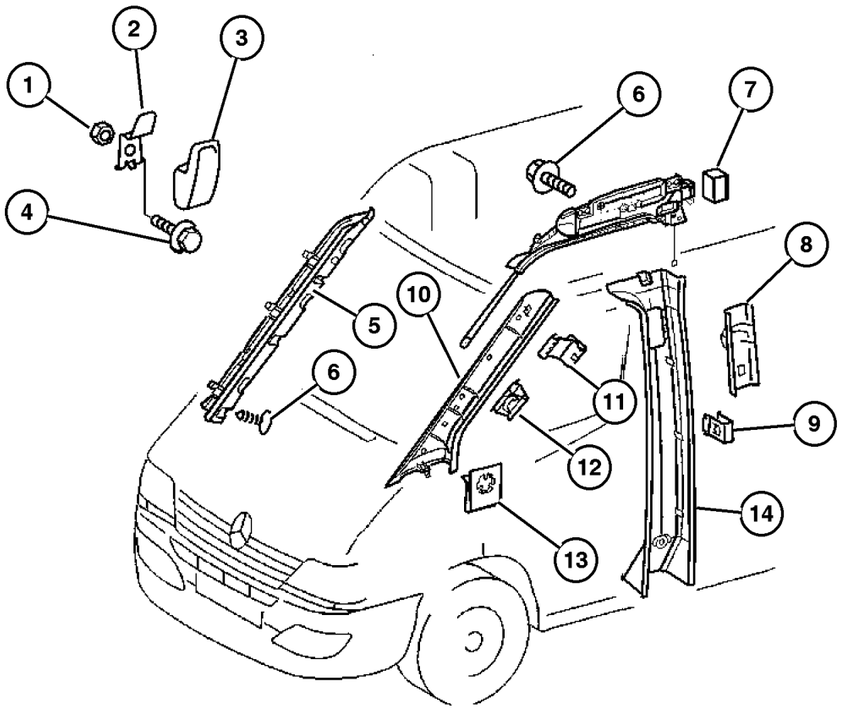

ITEM	PART NUMBER	QTY	LINE	SERIES	BODY	ENGINE	TRANS	TRIM	DESCRIPTION
		1	2, 6	L	51, 52, 54, 55, 56				Right
		1	3, 7	L	12, 15, 16				Right
11									CLIP, (NOT SERVICED) (Not Serviced)
12									CLIP, Trim
	6104 897AA	6	2, 6	L	11, 12, 14, 15, 16				
		6	2, 6	L	51, 52, 54, 55, 56				
		6	3, 7	L	12, 15, 16				
13									CLIP, (NOT SERVICED) (Not Serviced)
14									PANEL, B Pillar Trim
	5104 288AA	1	2, 6	L	11, 12, 14, 15, 16				With Partition, Left
		1	3, 7	L	12, 15, 16				With Partition, Left
	5104 289AA	1	2, 6	L	11, 12, 14, 15, 16				With Partition, With Non Passable Partition, Right
		1	3, 7	L	12, 15, 16				With Partition, With Non Passable Partition, Right
	5104 290AA	1	2, 6	L	11, 12, 14, 15, 16				With Partition, With Passable Partition, Right
		1	3, 7	L	12, 15, 16				With Partition, With Passable Partition, Right
	5123 267AA	1	2, 6	L	11, 12, 14, 15, 16				Without Left Sliding Door, Left
		1	2, 6	L	51, 52, 54, 55, 56				Without Left Sliding Door, Left
		1	3, 7	L	12, 15, 16				Without Left Sliding Door, Left
	5123 275AA	1	2, 6	L	11, 12, 14, 15, 16				With Left Sliding Door,Without Grab Handle, Load Ring, Left

Refer to Model Legend Information Bookmark

AR = Use as required - = Non illustrated part # = New this model year

March 3, 2006

« RETURN TO GROUP INDEX

« »

Inner Panels - Cab
Figure IVA-215

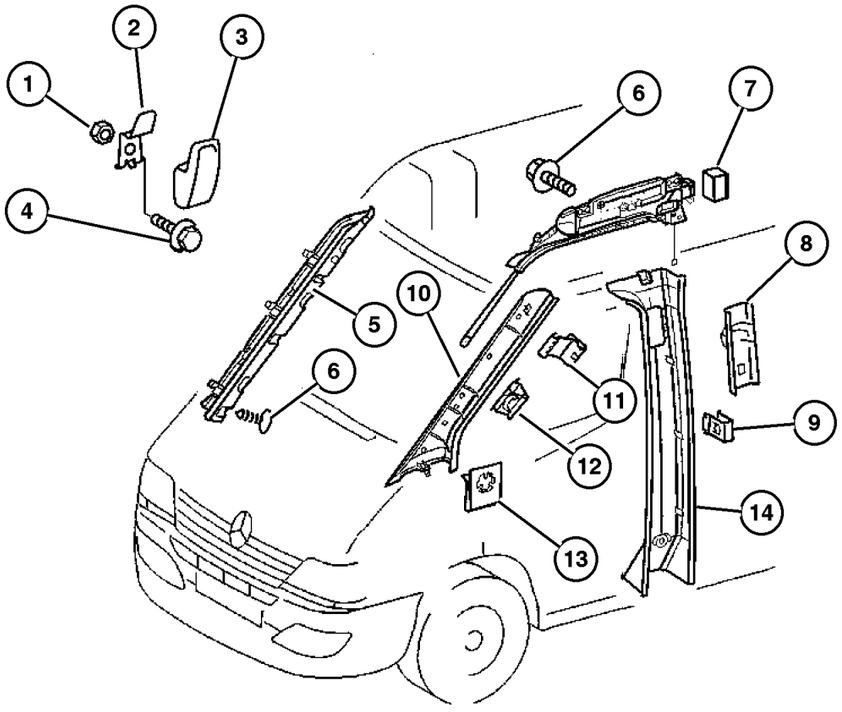

ITEM	PART NUMBER	QTY	LINE	SERIES	BODY	ENGINE	TRANS	TRIM	DESCRIPTION
		1	2, 6	L	51, 52, 54, 55, 56				With Left Sliding Door,Without Grab Handle, Load Ring, Left
		1	3, 7	L	12, 15, 16				With Left Sliding Door,Without Grab Handle, Load Ring, Left
	5123 285AA	1	2, 6	L	11, 12, 14, 15, 16				With Left Sliding Door and Load Ring, Without Grab Handle, Left
		1	2, 6	L	51, 52, 54, 55, 56				With Left Sliding Door and Load Ring, Without Grab Handle, Left
		1	3, 7	L	12, 15, 16				With Left Sliding Door and Load Ring, Without Grab Handle, Left
	5123 287AA	1	2, 6	L	11, 12, 14, 15, 16				With Right Sliding Door and Load Ring, Without Grab Handle, Right
		1	2, 6	L	51, 52, 54, 55, 56				With Right Sliding Door and Load Ring, Without Grab Handle, Right
		1	3, 7	L	12, 15, 16				With Right Sliding Door and Load Ring, Without Grab Handle, Right
	5123 304AA	1	2, 6	L	11, 12, 14, 15, 16				With Left Sliding Door and Grab handle Without Load Ring, Left
		1	2, 6	L	51, 52, 54, 55, 56				With Left Sliding Door and Grab handle Without Load Ring, Left
		1	3, 7	L	12, 15, 16				With Left Sliding Door and Grab handle Without Load Ring, Left
	5123 306AA	1	2, 6	L	11, 12, 14, 15, 16				With Right Sliding Door and Grab Handle Without Load Ring, Right
		1	2, 6	L	51, 52, 54, 55, 56				With Right Sliding Door and Grab Handle Without Load Ring, Right
		1	3, 7	L	12, 15, 16				With Right Sliding Door and Grab Handle Without Load Ring, Right
	5123 308AA	1	2, 6	L	11, 12, 14, 15, 16				With Left Sliding Door,Grab Handle and Load Ring, Left
		1	2, 6	L	51, 52, 54, 55, 56				With Left Sliding Door,Grab Handle and Load Ring, Left
		1	3, 7	L	12, 15, 16				With Left Sliding Door,Grab Handle and Load Ring, Left

Refer to Model Legend Information Bookmark

Inner Panels - Cab
Figure IVA-215

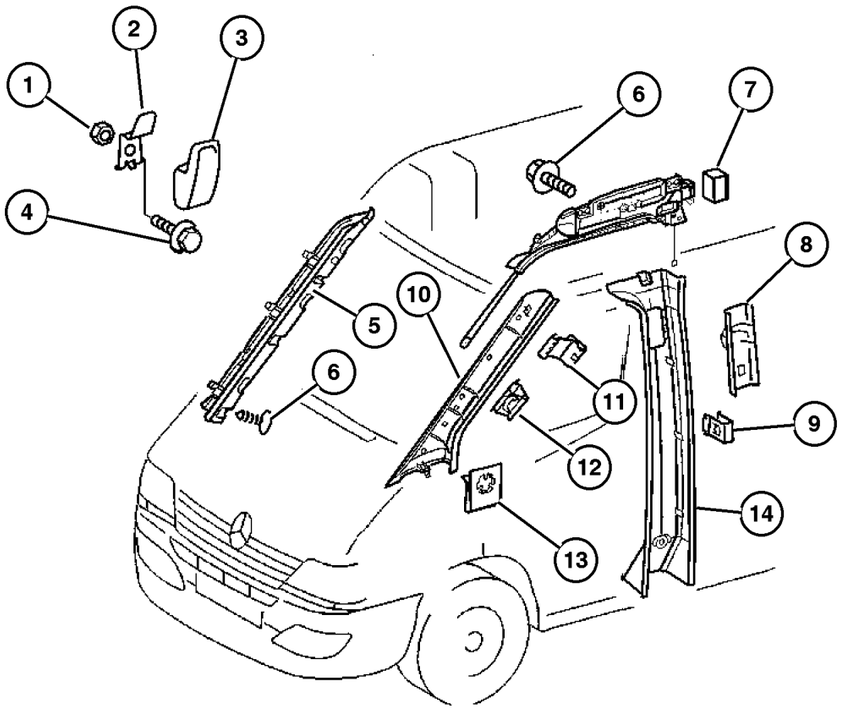

ITEM	PART NUMBER	QTY	LINE	SERIES	BODY	ENGINE	TRANS	TRIM	DESCRIPTION
	5123 310AA	1	2, 6	L	11, 12, 14, 15, 16				With Right Sliding Door,Grab Handle and Load Ring, Right
		1	2, 6	L	51, 52, 54, 55, 56				With Right Sliding Door,Grab Handle and Load Ring, Right
		1	3, 7	L	12, 15, 16				With Right Sliding Door,Grab Handle and Load Ring, Right
-15									CLIP, U Type
	5125 582AA-	4	2, 6	L	01, 02, 06				
		6	2, 6	L	11, 12, 14, 15, 16				
		6	2, 6	L	51, 52, 54, 55, 56				

Refer to Model Legend Information Bookmark

Inner Panels - Plywood
Figure IVA-220

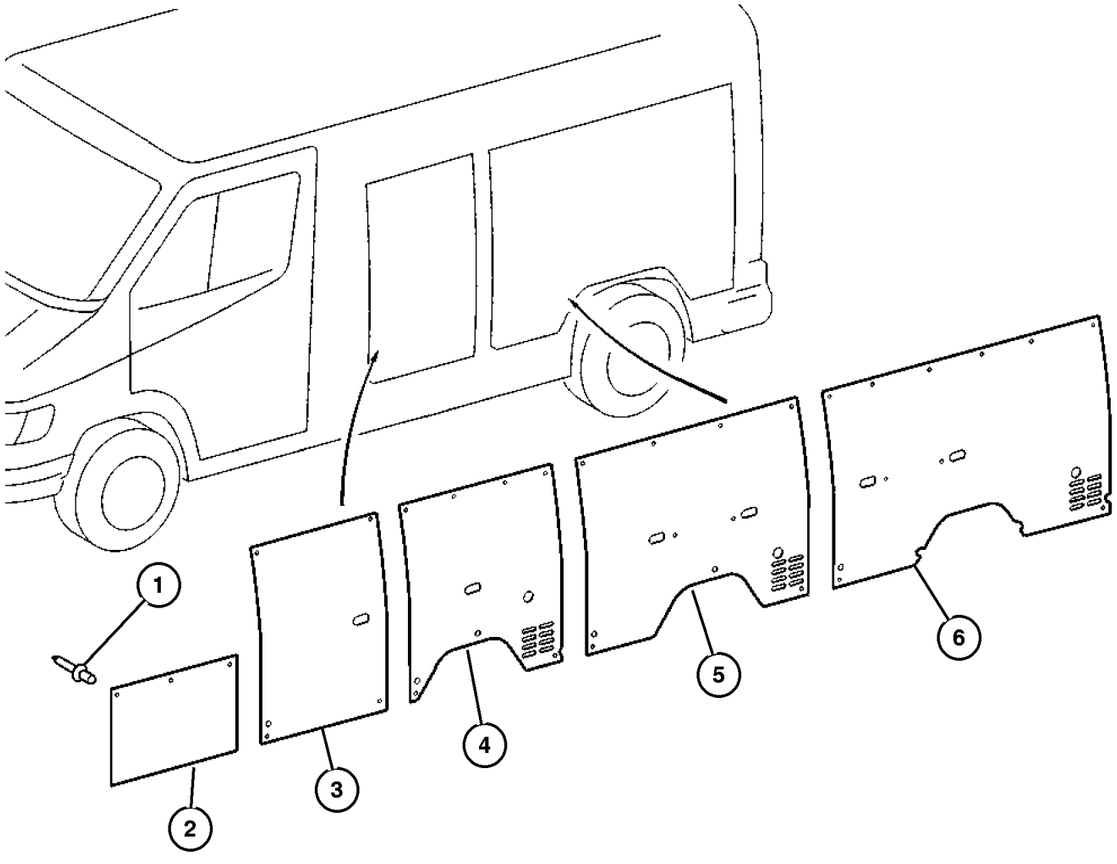

ITEM	PART NUMBER	QTY	LINE	SERIES	BODY	ENGINE	TRANS	TRIM	DESCRIPTION
1									RIVET
	6104 865AA	10	2, 6	L	11, 12, 14, 15, 16				
		10	2, 6	L	51, 52, 54, 55, 56				
		10	3, 7	L	12, 15, 16				
2									PANEL, Inner
	5104 295AA	1	2, 6	L	11, 12, 14, 15, 16				
		1	3, 7	L	12, 15, 16				
3									PANEL, Inner
	5104 296AA	1	2, 6	L	11, 12, 14, 15, 16				
		1	3, 7	L	12, 15, 16				
4	5131 868AA	2	2, 6	L	11, 14				PANEL, Side Trim
5									PANEL, Side Trim
	5123 247AA	2	2, 6	L	12, 15				
		2	3, 7	L	12, 15				
6									PANEL, Quarter Trim
	5104 294AA	2	2, 6	L	16				
		2	3, 7	L	16				

Refer to Model Legend Information Bookmark

AR = Use as required - = Non illustrated part # = New this model year

March 3, 2006

« RETURN TO GROUP INDEX

Inner Panel, Hard Fiber
Figure IVA-221

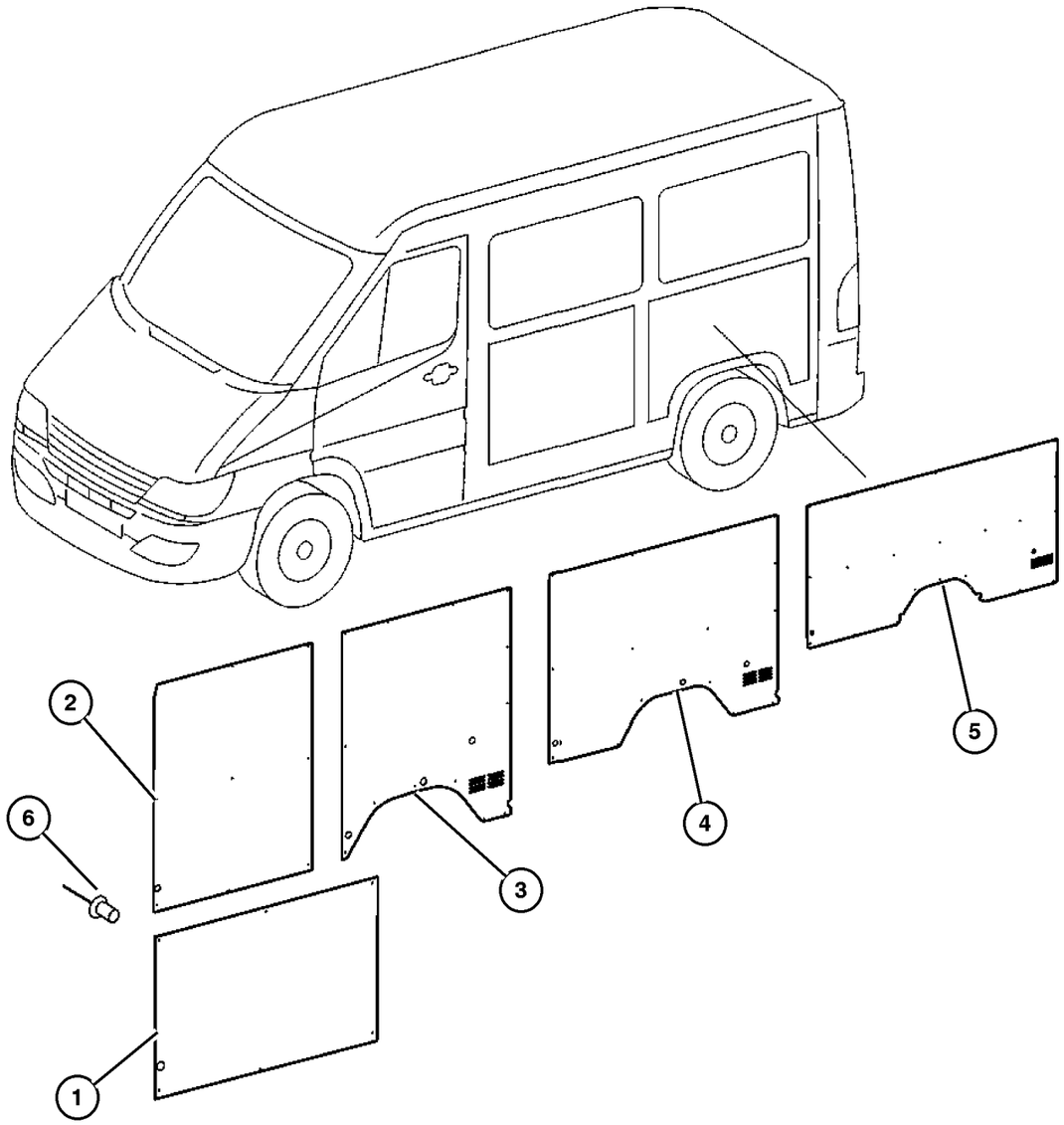

ITEM	PART NUMBER	QTY	LINE	SERIES	BODY	ENGINE	TRANS	TRIM	DESCRIPTION
1									PANEL, Cargo Compartment, Without Windows
	5123 222AA	1	2, 6	L	11, 12, 14, 15, 16				
		1	3, 7	L	12, 15, 16				
2									PANEL, Cargo Compartment, Without Windows
	5123 223AA	1	2, 6	L	11, 12, 14, 15, 16				
		1	3, 7	L	12, 15, 16				
3	5131 857AA	2	2, 6	L	11, 14				PANEL, Quarter Trim, Right & Left
4									PANEL, Quarter Trim
	5123 224AA	2	2, 6	L	12, 15				Right & Left
		2	3, 7	L	12, 15				Right & Left
5									PANEL, Quarter Trim
	5123 225AA	2	2, 6	L	16				Right & Left
		2	3, 7	L	16				Right & Left
6									RIVET
	6104 865AA	10	2, 6	L	11, 12, 14, 15, 16				
		10	2, 6	L	51, 52, 54, 55, 56				

Refer to Model Legend Information Bookmark

AR = Use as required - = Non illustrated part # = New this model year

March 3, 2006

« RETURN TO GROUP INDEX

Inner Panels
Figure IVA-225

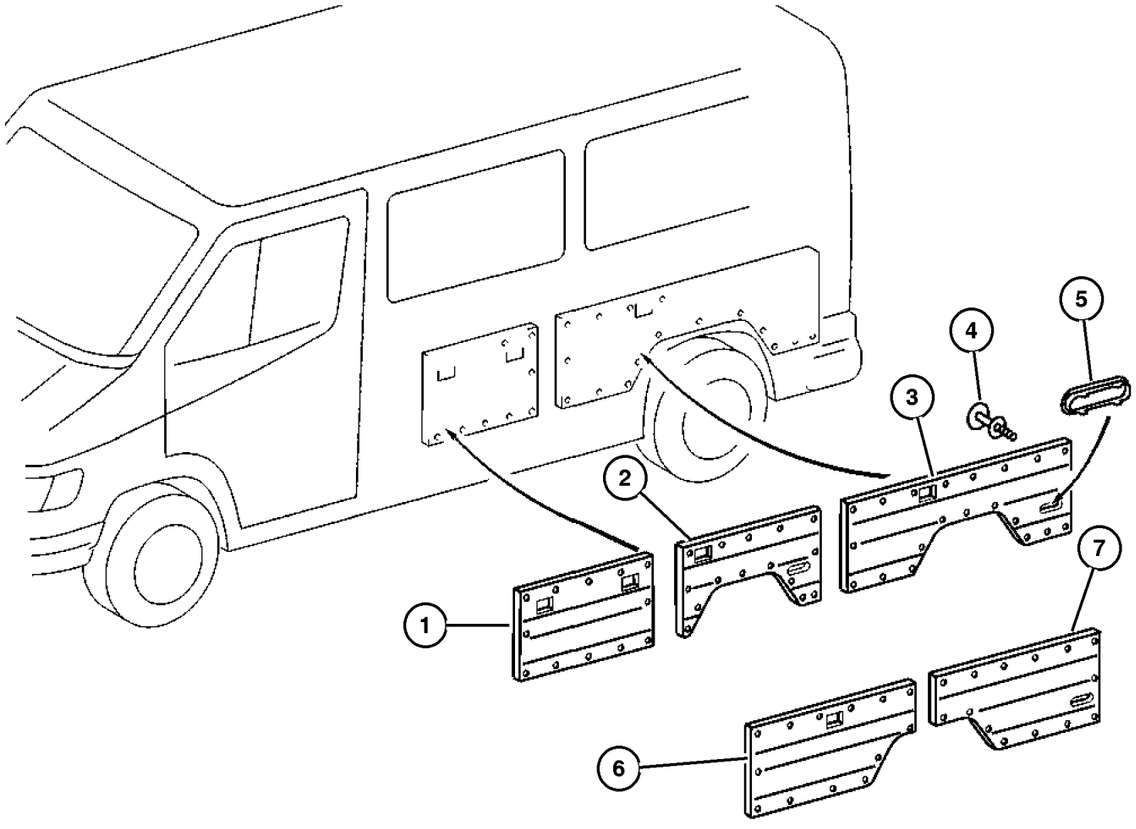

ITEM	PART NUMBER	QTY	LINE	SERIES	BODY	ENGINE	TRANS	TRIM	DESCRIPTION
1									PANEL, Cargo compartment
	5123 228AA	1	2, 6	L	11, 12, 14, 15, 16				
		1	2, 6	L	51, 52, 54, 55, 56				
		1	3, 7	L	12, 15, 16				
2									PANEL, Cargo compartment
	5123 231AA	1	2, 6	L	11, 14				Left
		1	2, 6	L	51, 54				Left
	5123 233AA	1	2, 6	L	11, 14				Right
		1	2, 6	L	51, 54				Right
3									PANEL, Cargo compartment
	5123 234AA	1	2, 6	L	12, 15				140 Inch Wheelbase, Left
		1	2, 6	L	52, 55				140 Inch Wheelbase, Left
		1	3, 7	L	12, 15				140 Inch Wheelbase, Left
	5123 236AA	1	2, 6	L	12, 15				140 Inch Wheelbase, Right
		1	2, 6	L	52, 55				140 Inch Wheelbase, Right
		1	3, 7	L	12, 15				Right
		1	2, 6	L	52, 55				140 Inch Wheelbase, Right
		1	3, 7	L	12, 15				Right
4									PIN, Push
	5103 553AA	9	2, 6	L	11, 12, 14, 15, 16				
		9	2, 6	L	51, 52, 54, 55, 56				
		9	3, 7	L	12, 15, 16				
5									EXHAUSTER, Quarter Panel
	1AS83 RC3AA	2	2, 6	L	11, 12, 14, 15, 16				
		2	2, 6	L	51, 52, 54, 55, 56				
		2	3, 7	L	12, 15, 16				
6									PANEL, Cargo compartment
	5123 238AA	1	2, 6	L	16				158 Inch Wheelbase, Left Front
		1	2, 6	L	56				158 Inch Wheelbase, Left Front
		1	3, 7	L	16				158 Inch Wheelbase, Left Front
	5123 240AA	1	2, 6	L	16				158 Inch Wheelbase, Right Front
		1	2, 6	L	56				158 Inch Wheelbase, Right Front

Refer to Model Legend Information Bookmark

Inner Panels
Figure IVA-225

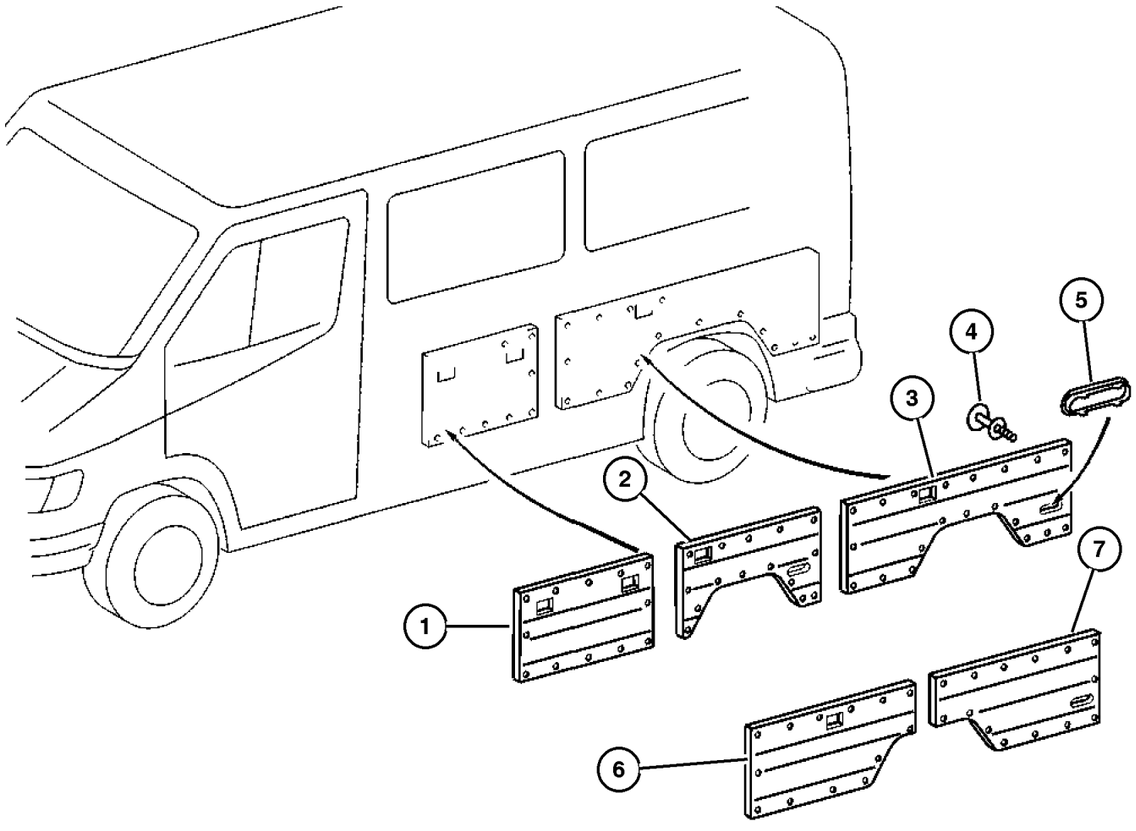

ITEM	PART NUMBER	QTY	LINE	SERIES	BODY	ENGINE	TRANS	TRIM	DESCRIPTION
		1	3, 7	L	16				158 Inch Wheelbase, Right Front
7									PANEL, Cargo compartment
	5123 242AA	1	2, 6	L	11, 12, 14, 15, 16				158 Inch Wheelbase, Left Front
		1	2, 6	L	51, 52, 54, 55, 56				158 Inch Wheelbase, Left Front
		1	3, 7	L	12, 15, 16				158 Inch Wheelbase, Left Front
	5123 243AA	1	2, 6	L	11, 12, 14, 15, 16				158 Inch Wheelbase, Right Front
		1	2, 6	L	51, 52, 54, 55, 56				158 Inch Wheelbase, Right Front
		1	3, 7	L	12, 15, 16				158 Inch Wheelbase, Right Front

Refer to Model Legend Information Bookmark

Inner Paneling Window - Pillar In Cab
Figure IVA-230

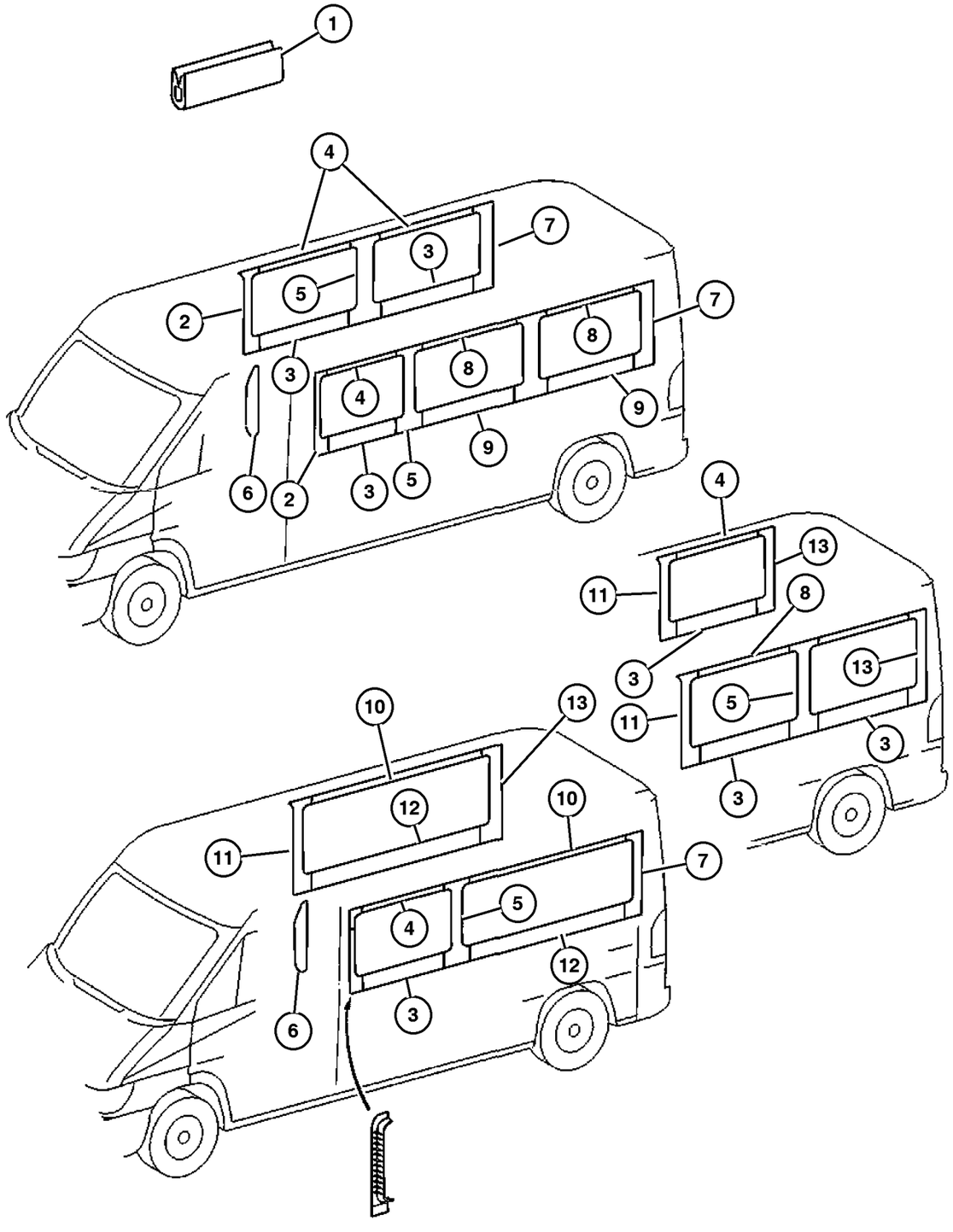

ITEM	PART NUMBER	QTY	LINE	SERIES	BODY	ENGINE	TRANS	TRIM	DESCRIPTION
1	5134 108AA	200	2, 6	L	16				WEATHERSTRIP, Glass
2	5123 334AA	1	2, 6	L	11, 12, 14, 15, 16				COVER, Rear Window Moulding
3	5123 366AA	1	2, 6	L	12, 15				PANEL, Lower Rear
4									PANEL, Header
	5104 293AA	2	2, 6	L	11, 12, 14, 15				Upper Window
		2	2, 6	L	51, 52, 54, 55				Upper Window
		1	3, 7	L	12, 15, 16				Upper Window
5									COVER, Rear Window Moulding
	5123 335AA	3	2, 6	L	56				
		3	3, 7	L	16				
6									PANEL, B Pillar Upper Trim
	5123 367AA	1	2, 6	L	11, 12, 14, 15, 16				Right
		1	2, 6	L	51, 52, 54, 55, 56				Right
		1	3, 7	L	12, 15, 16				Right
	5123 368AA	1	2, 6	L	11, 12, 14, 15, 16				Left
		1	2, 6	L	51, 52, 54, 55, 56				Left
		1	3, 7	L	12, 15, 16				Left
7									COVER, Rear Window Moulding
	5123 337AA	1	2, 6	L	15				
		1	2, 6	L	55				
		1	3, 7	L	15				
8									PANEL, Header
	5123 332AA	4	2, 6	L	11, 12, 14, 15, 16				Garnish [Medium], Upper
		4	2, 6	L	51, 52, 54, 55, 56				Garnish [Medium], Upper
		4	3, 7	L	12, 15, 16				Garnish [Medium], Upper
9									PANEL, Lower Rear

Refer to Model Legend Information Bookmark

Inner Paneling Window - Pillar In Cab
Figure IVA-230

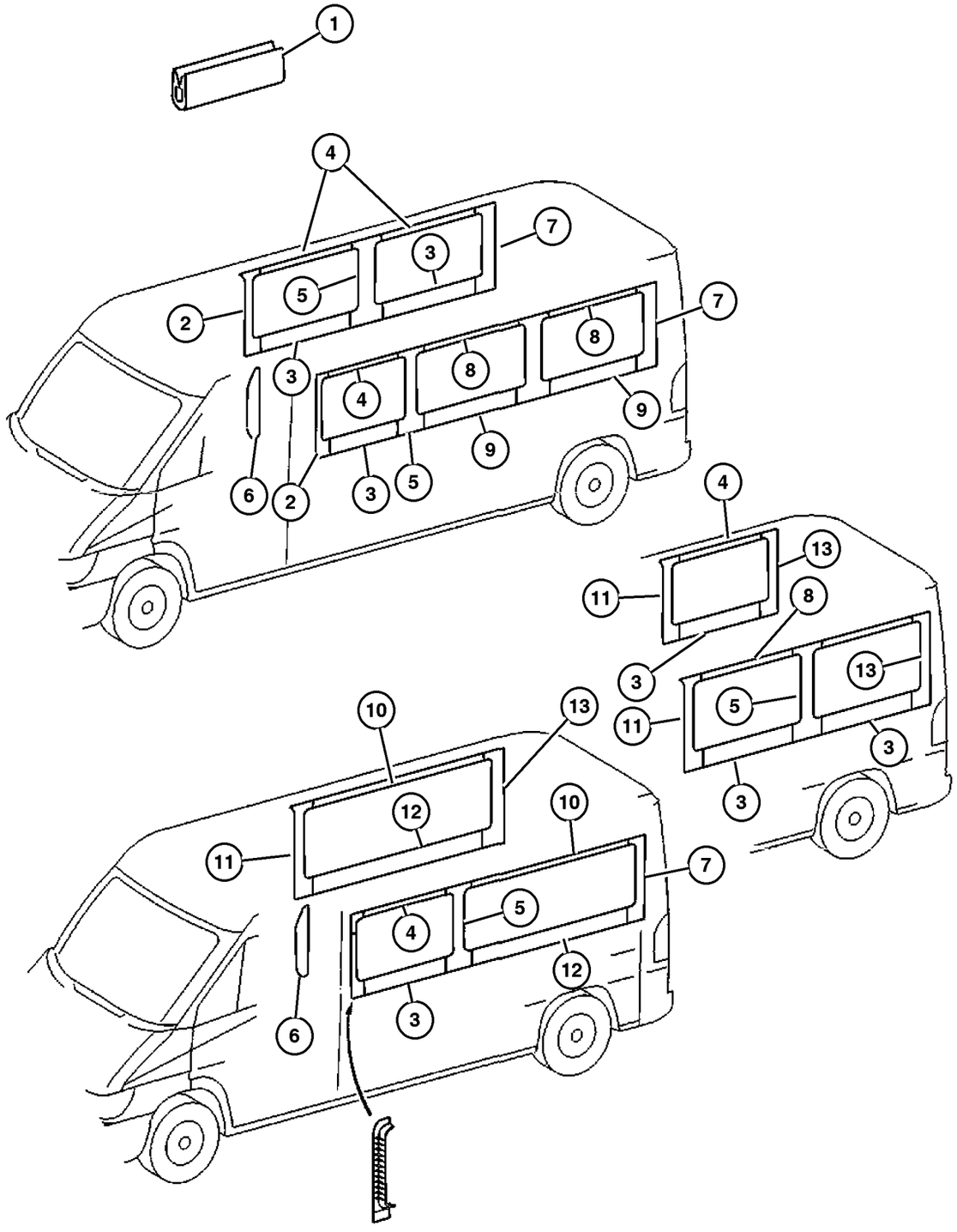

ITEM	PART NUMBER	QTY	LINE	SERIES	BODY	ENGINE	TRANS	TRIM	DESCRIPTION
	5123 363AA	4	2, 6	L	11, 12, 14, 15, 16				Garnish [Medium], Lower
		4	2, 6	L	51, 52, 54, 55, 56				Garnish [Medium], Lower
		4	3, 7	L	12, 15, 16				Garnish [Medium], Lower
10									PANEL, Header
	5123 333AA	2	2, 6	L	12, 15				Garnish [Long], Upper
		2	2, 6	L	52, 55				Garnish [Long], Upper
		2	3, 7	L	12, 15				Garnish [Long], Upper
11									COVER, Rear Window Moulding
	5123 362AA	1	2, 6	L	11, 12, 14, 15, 16				Vertical Molding, Right
		1	2, 6	L	51, 52, 54, 55, 56				Vertical Molding, Right
		1	3, 7	L	12, 15, 16				Vertical Molding, Right
	5123 364AA	1	2, 6	L	11, 12, 14, 15, 16				Vertical Molding, Left
		1	2, 6	L	51, 52, 54, 55, 56				Vertical Molding, Left
		1	3, 7	L	12, 15, 16				Vertical Molding, Left
12									PANEL, Lower Rear
	5123 369AA	2	2, 6	L	12, 15				Garnish [Long], Lower
		2	2, 6	L	52, 55				Garnish [Long], Lower
		2	3, 7	L	12, 15				Garnish [Long], Lower
13									COVER, Rear Window Moulding
	5123 361AA	1	2, 6	L	15				
		1	2, 6	L	55				
		1	3, 7	L	15				

Refer to Model Legend Information Bookmark

AR = Use as required - = Non illustrated part # = New this model year

March 3, 2006

« RETURN TO GROUP INDEX

Cargo Retainers - Without Windows
Figure IVA-235

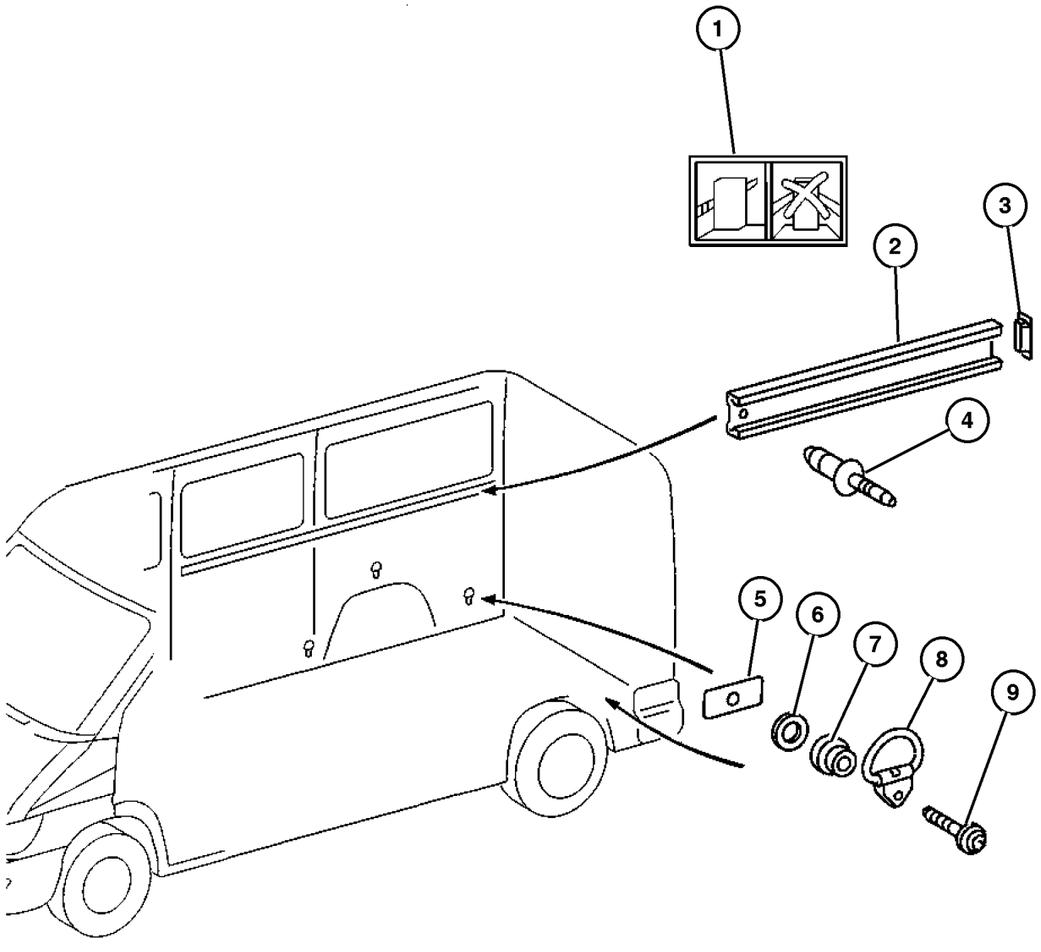

ITEM	PART NUMBER	QTY	LINE	SERIES	BODY	ENGINE	TRANS	TRIM	DESCRIPTION
1									LABEL
	5124 356AA	1	2, 6	L	12, 15				Cargo Tie Down
		1	3, 7	L	12, 15, 16				Cargo Tie Down
2									RAIL
	5121 437AA	1	2, 6	L	11, 12, 14, 15				Right And Left
		2	2, 6	L	16				Right And Left
		1	3, 7	L	12, 15				Right And Left
		1	3, 7	L	16				Right And Left
3									END CAP, Side Rail
	5121 423AA	4	2, 6	L	11, 12, 14, 15, 16				Right & Left
		4	3, 7	L	12, 15, 16				Right & Left
4									RIVET
	5125 821AA	16	2, 6	L	12, 15				
		16	3, 7	L	12, 15				
5									NUT
	5103 926AA	4	2, 6	L	11, 12, 14, 15				
		4	2, 6	L	51, 52, 54, 55				
		4	3, 7	L	12, 15				
6									WASHER
	5103 726AA	7	2, 6	L	11, 12, 14, 15				
		8	2, 6	L	16				
		10	2, 6	L	51, 52, 54, 55, 56				
		7	3, 7	L	12, 15				
7									BUSHING
	5104 544AA	7	2, 6	L	11, 12, 14, 15				
		9	2, 6	L	16				
		8	2, 6	L	51, 52, 54, 55, 56				
		8	3, 7	L	12, 15				
8									RING, RING-RETAINER
	5104 500AA	7	2, 6	L	11, 12, 14, 15				
		9	2, 6	L	16				

Refer to Model Legend Information Bookmark

AR = Use as required - = Non illustrated part # = New this model year

March 3, 2006

« RETURN TO GROUP INDEX »

Cargo Retainers - Without Windows
Figure IVA-235

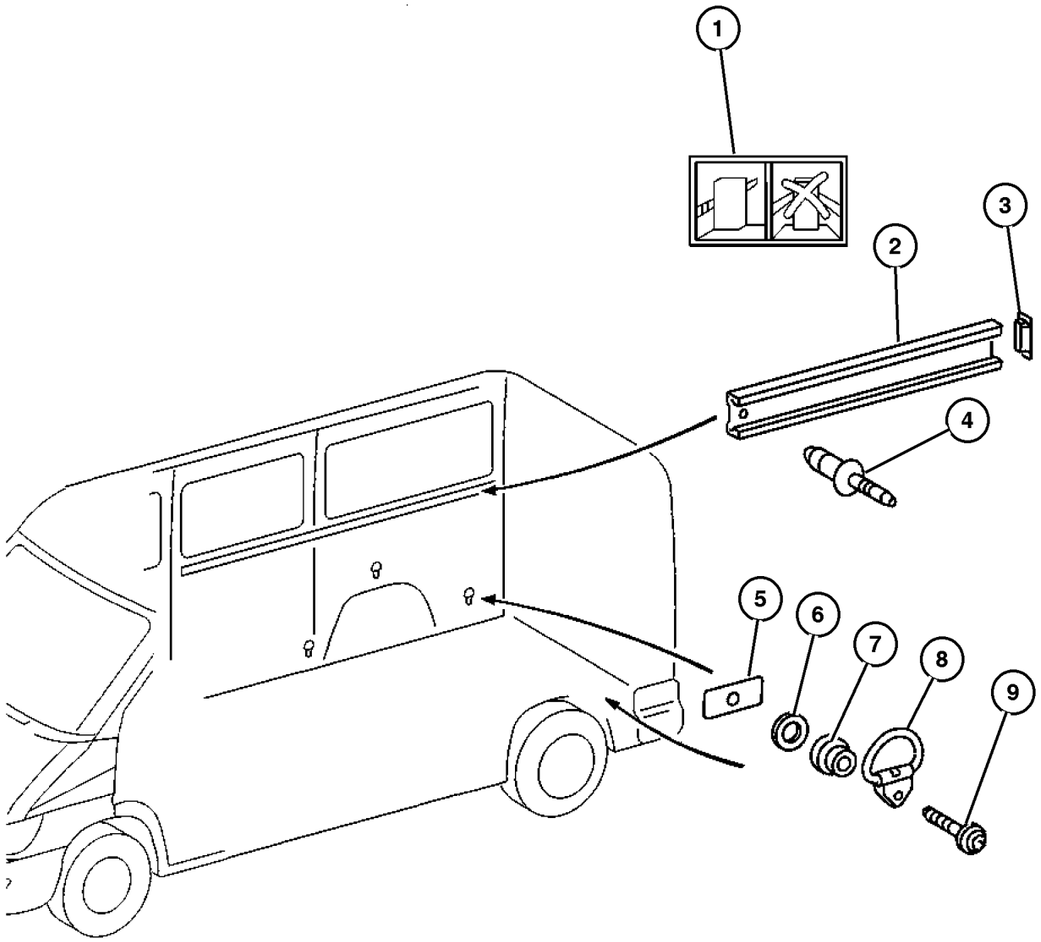

ITEM	PART NUMBER	QTY	LINE	SERIES	BODY	ENGINE	TRANS	TRIM	DESCRIPTION
		8	2, 6	L	51, 52, 54, 55, 56				
		8	3, 7	L	12, 15				
9									BOLT, Hex Head
	5103 816AA	7	2, 6	L	11, 12, 14, 15				
		8	2, 6	L	51, 52, 54, 55, 56				
		8	3, 7	L	12, 15				

Refer to Model Legend Information Bookmark

AR = Use as required - = Non illustrated part # = New this model year

March 3, 2006

« RETURN TO GROUP INDEX

Cargo Retainers - With Windows
Figure IVA-240

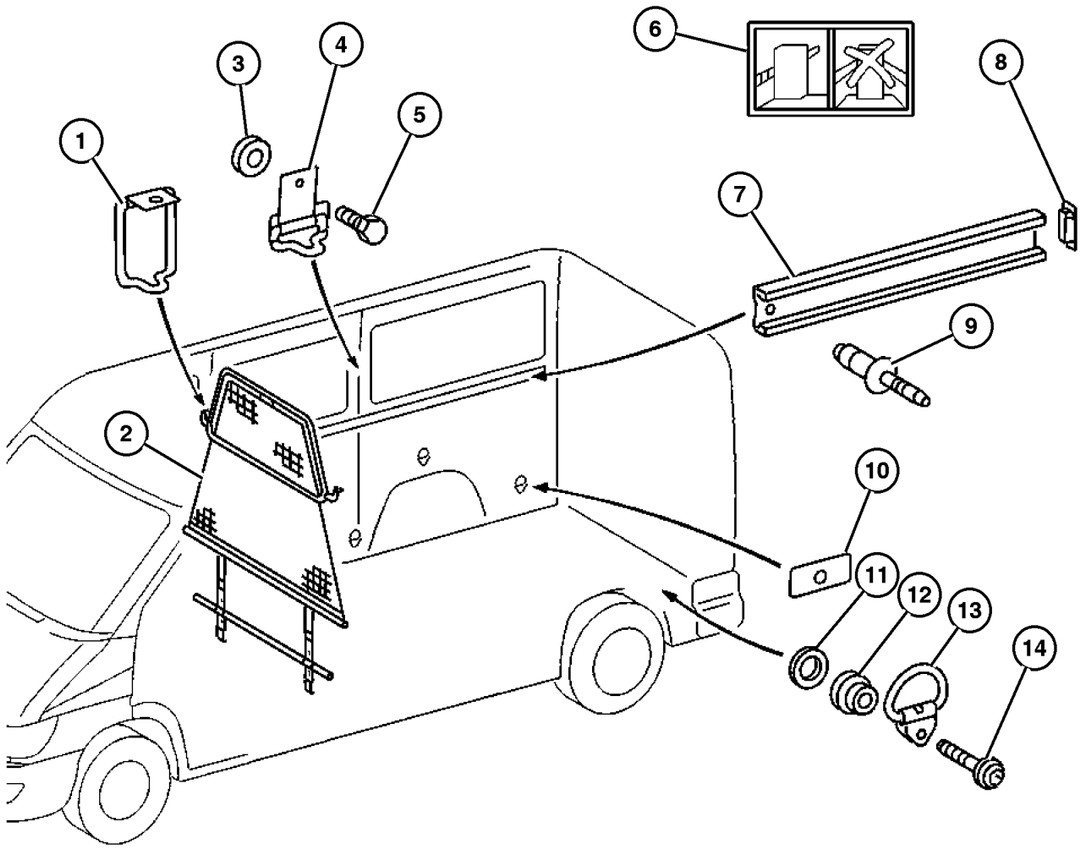

ITEM	PART NUMBER	QTY	LINE	SERIES	BODY	ENGINE	TRANS	TRIM	DESCRIPTION
1									BRACKET, (NOT SERVICED) (Not Serviced)
2									GRILLE, Texture, (NOT SERVICED) (Not Serviced)
3									WASHER, Flat, M8
	5133 977AA	1	2, 6	L	01, 02, 06				
		1	2, 6	L	11, 12, 14, 15, 16				
		1	2, 6	L	51, 52, 54, 55, 56				
4									BRACKET, (NOT SERVICED) (Not Serviced)
5									BOLT, Hex Head
	5126 227AA	2	2, 6	L	01, 02, 06				
		2	2, 6	L	11, 12, 14, 15, 16				
		2	2, 6	L	51, 52, 54, 55, 56				
6	5124 356AA	1	2, 6	L	12, 15				LABEL, Cargo Tie Down
7									RAIL
	5121 437AA	1	2, 6	L	12, 15				Cargo Retaining
		1	2, 6	L	11, 14, 16				Cargo Retaining
		1	3, 7	L	12, 15				Cargo Retaining
		1	3, 7	L	16				Cargo Retaining
8									END CAP, Side Rail
	5121 423AA	4	2, 6	L	11, 12, 14, 15, 16				Right & Left
		4	3, 7	L	12, 15, 16				Right & Left
9									RIVET
	5125 821AA	13	2, 6	L	11, 14				
		16	2, 6	L	12, 15				
		22	2, 6	L	16				
		16	3, 7	L	12, 15				
		22	3, 7	L	16				
10									NUT

Refer to Model Legend Information Bookmark

AR = Use as required - = Non illustrated part # = New this model year

March 3, 2006

« RETURN TO GROUP INDEX

»

Cargo Retainers - With Windows
Figure IVA-240

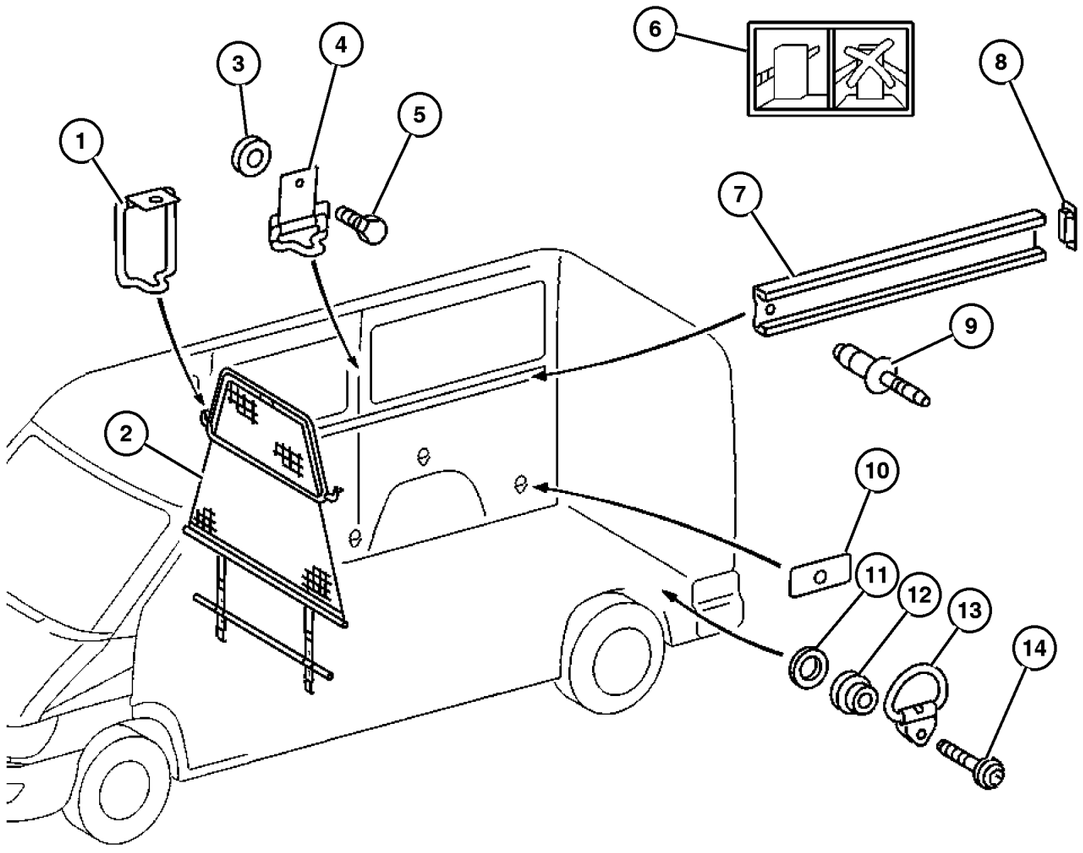

ITEM	PART NUMBER	QTY	LINE	SERIES	BODY	ENGINE	TRANS	TRIM	DESCRIPTION
	5103 926AA	4	2, 6	L	11, 12, 14, 15				
		3	2, 6	L	16				
		4	2, 6	L	51, 52, 54, 55				
		3	2, 6	L	56				
		2	3, 7	L	12, 15, 16				
11									WASHER
	5103 726AA	7	2, 6	L	11, 12, 14, 15				
		8	2, 6	L	51, 52, 54, 55, 56				
		7	3, 7	L	12, 15				
		10	3, 7	L	16				
12									BUSHING
	5104 544AA	7	2, 6	L	11, 12, 14, 15				
		8	2, 6	L	51, 52, 54, 55, 56				
		7	3, 7	L	12, 15				
13									RING, RING-RETAINER
	5104 500AA	7	2, 6	L	11, 12, 14, 15				
		8	2, 6	L	51, 52, 54, 55, 56				
		7	3, 7	L	12, 15				
		9	3, 7	L	16				
14									BOLT, Hex Head
	5103 816AA	7	2, 6	L	11, 12, 14, 15				
		8	2, 6	L	16				
		8	2, 6	L	51, 52, 54, 55, 56				
		7	3, 7	L	12, 15				
		9	3, 7	L	16				
-15									PARTITION, Cargo
	5104 317AA-	1	2, 6	L	14, 15, 16				Left
		1	3, 7	L	15, 16				Left

Refer to Model Legend Information Bookmark

AR = Use as required - = Non illustrated part # = New this model year

March 3, 2006

« RETURN TO GROUP INDEX

« »

Cargo Retainers - With Windows
Figure IVA-240

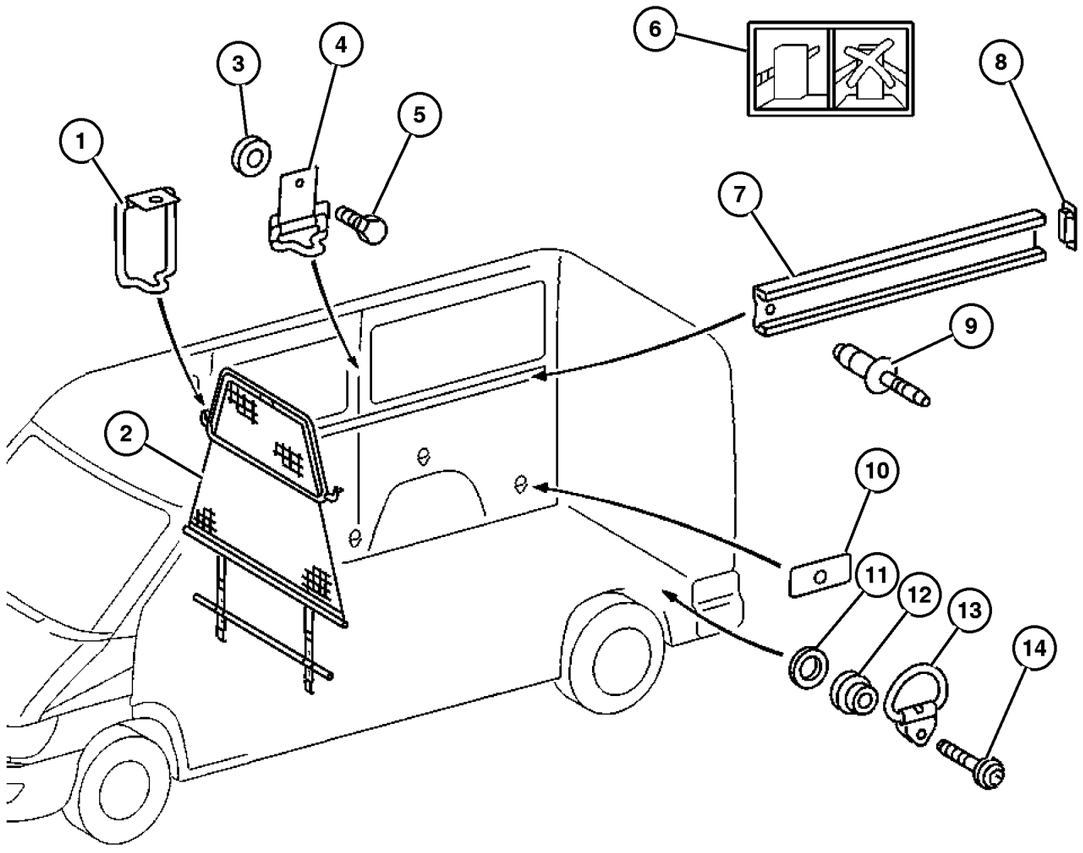

ITEM	PART NUMBER	QTY	LINE	SERIES	BODY	ENGINE	TRANS	TRIM	DESCRIPTION
	5104 318AA-	1	2, 6	L	14, 15, 16				Right
		1	3, 7	L	15, 16				Right

Refer to Model Legend Information Bookmark

AR = Use as required - = Non illustrated part # = New this model year

March 3, 2006

« RETURN TO GROUP INDEX

«

Rear Pillar Inner Panel
Figure IVA-245

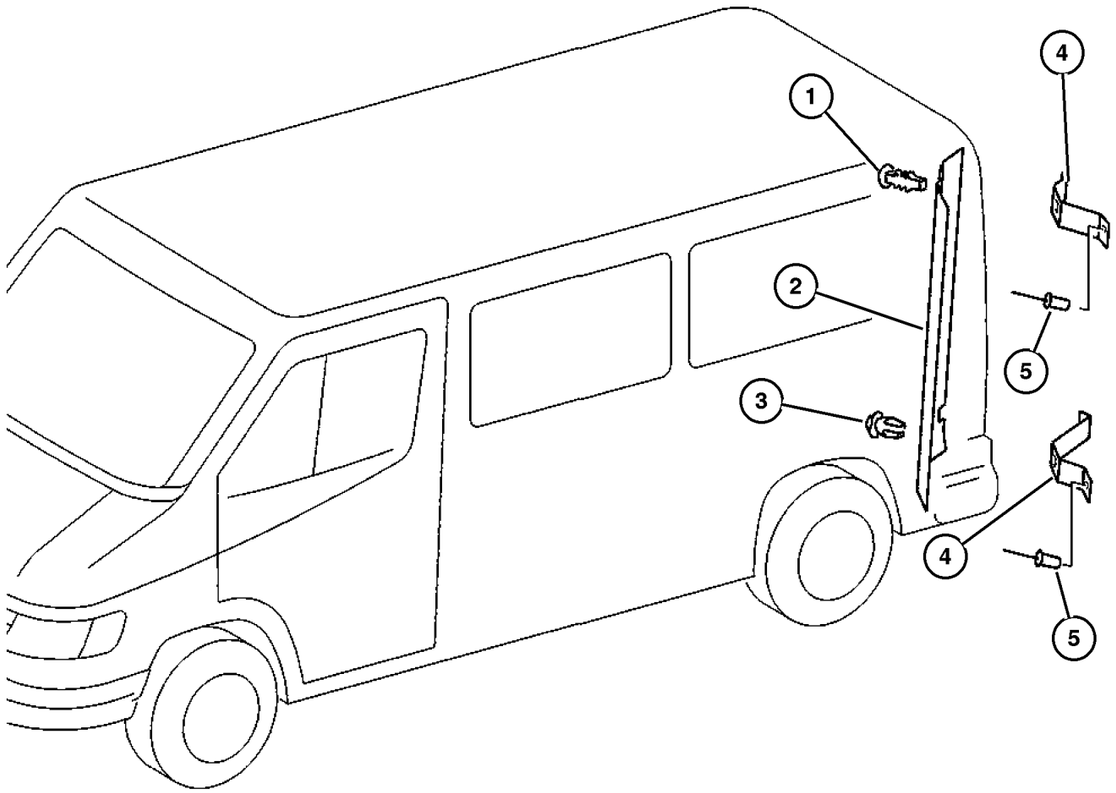

ITEM	PART NUMBER	QTY	LINE	SERIES	BODY	ENGINE	TRANS	TRIM	DESCRIPTION
1									PIN, Push
	5103 814AA	3	2, 6	L	11, 12, 14, 15, 16				
		3	2, 6	L	51, 52, 54, 55, 56				
		3	3, 7	L	12, 15, 16				
2									PANEL, D Pillar Trim
	5104 291AA	1	2, 6	L	11, 12, 14, 15, 16				With Grab Handles and Without Load Rings, Left
		1	2, 6	L	51, 52, 54, 55, 56				With Grab Handles and Without Load Rings, Left
		1	3, 7	L	12, 15, 16				With Grab Handles and Without Load Rings, Left
	5104 292AA	1	2, 6	L	11, 12, 14, 15, 16				With Grab Handles and Without Load Rings, Right
		1	2, 6	L	51, 52, 54, 55, 56				With Grab Handles and Without Load Rings, Right
		1	3, 7	L	12, 15, 16				With Grab Handles and Without Load Rings, Right
	5123 318AA	1	2, 6	L	11, 12, 14, 15, 16				Without Grab Handles and Load Rings, Left Rear
		1	2, 6	L	51, 52, 54, 55, 56				Without Grab Handles and Load Rings, Left Rear
		1	3, 7	L	12, 15, 16				Without Grab Handles and Load Rings, Left Rear
	5123 320AA	1	2, 6	L	11, 12, 14, 15, 16				Without Grab Handles and Load Rings, Right Rear
		1	2, 6	L	51, 52, 54, 55, 56				Without Grab Handles and Load Rings, Right Rear
		1	3, 7	L	12, 15, 16				Without Grab Handles and Load Rings, Right Rear
	5123 324AA	1	2, 6	L	11, 12, 14, 15, 16				With Load Rings Without Grab Handles, Left

Refer to Model Legend Information Bookmark

Rear Pillar Inner Panel
Figure IVA-245

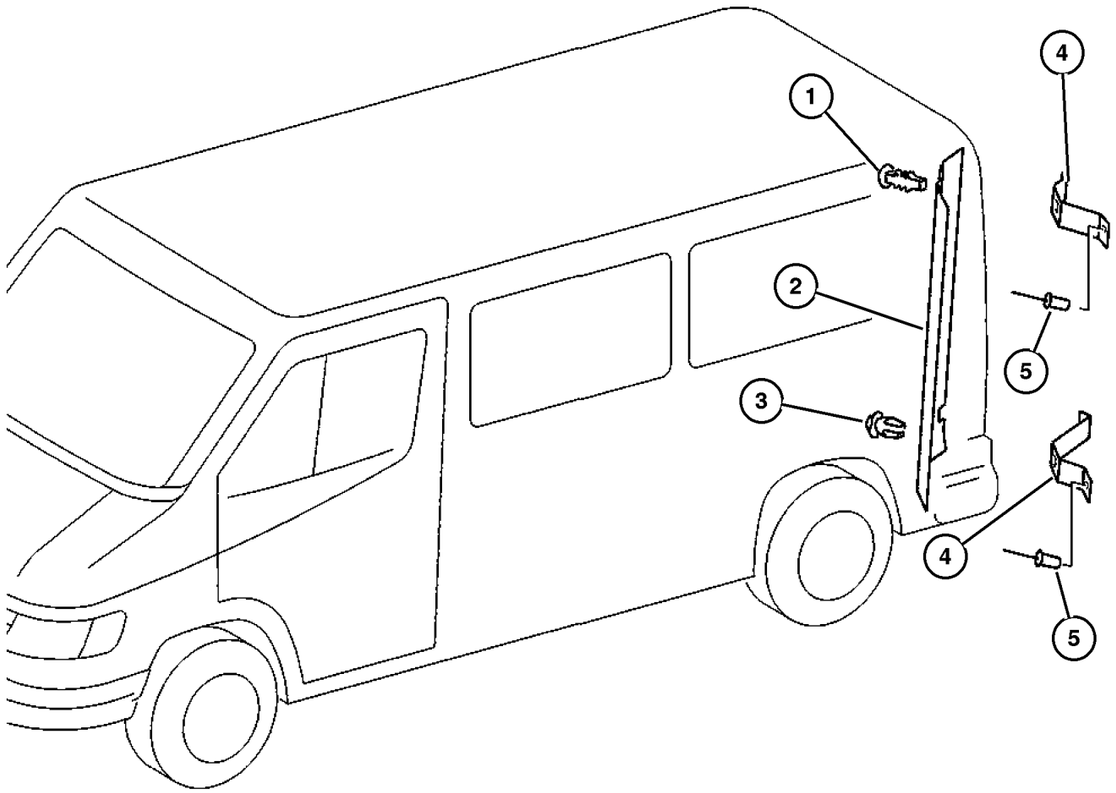

ITEM	PART NUMBER	QTY	LINE	SERIES	BODY	ENGINE	TRANS	TRIM	DESCRIPTION
		1	2, 6	L	51, 52, 54, 55, 56				With Load Rings Without Grab Handles, Left
		1	3, 7	L	12, 15, 16				With Load Rings Without Grab Handles, Left
	5123 326AA	1	2, 6	L	11, 12, 14, 15, 16				With Load Rings Without Grab Handles, Right
		1	2, 6	L	51, 52, 54, 55, 56				With Load Rings Without Grab Handles, Right
		1	3, 7	L	12, 15, 16				With Load Rings Without Grab Handles, Right
	5123 328AA	1	2, 6	L	11, 12, 14, 15, 16				With Grab Handles and Load Rings, Left
		1	2, 6	L	51, 52, 54, 55, 56				With Grab Handles and Load Rings, Left
		1	3, 7	L	12, 15, 16				With Grab Handles and Load Rings, Left
	5123 330AA	1	2, 6	L	11, 12, 14, 15, 16				With Grab Handles and Load Rings, Right
		1	2, 6	L	51, 52, 54, 55, 56				With Grab Handles and Load Rings, Right
		1	3, 7	L	12, 15, 16				With Grab Handles and Load Rings, Right
3									PIN, Push
	5103 785AA	3	2, 6	L	11, 12, 14, 15, 16				
		3	2, 6	L	51, 52, 54, 55, 56				
		3	3, 7	L	12, 15, 16				
4									BRACKET, Trim Panel
	5104 280AA	2	2, 6	L	11, 12, 14, 15, 16				D-Pillar, Left
		2	2, 6	L	51, 52, 54, 55, 56				D-Pillar, Left

Refer to Model Legend Information Bookmark

AR = Use as required - = Non illustrated part # = New this model year

March 3, 2006

« RETURN TO GROUP INDEX

Rear Pillar Inner Panel
Figure IVA-245

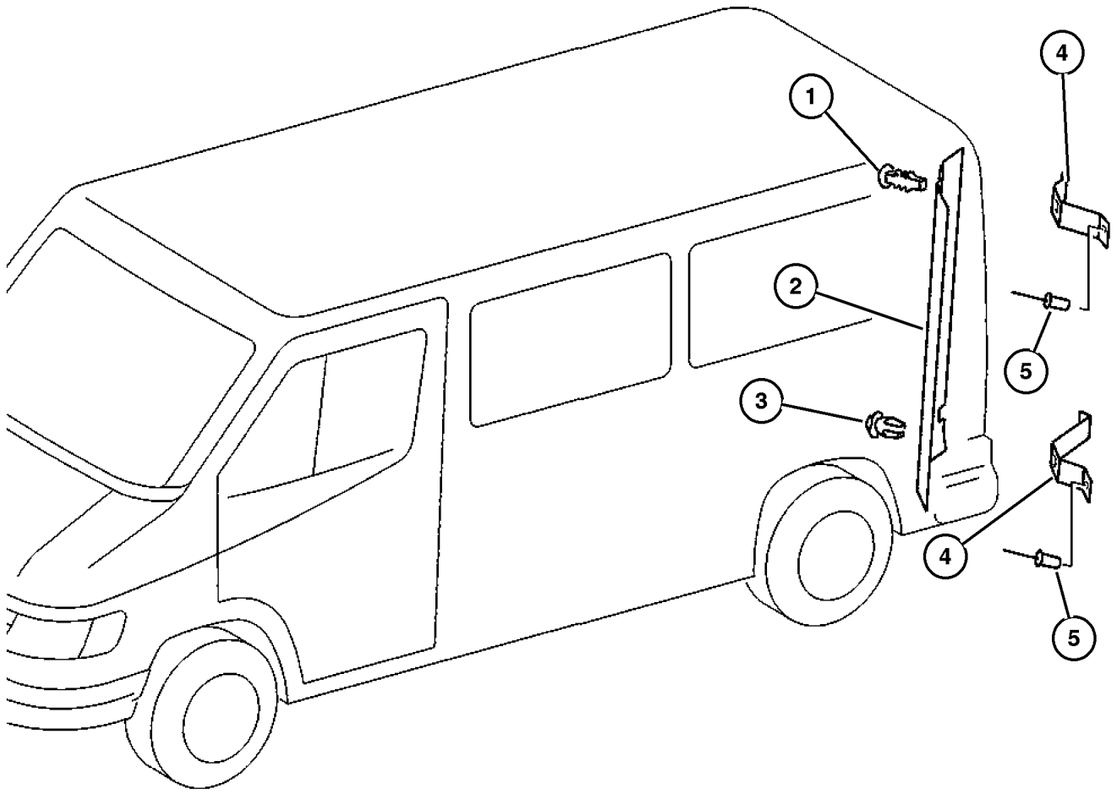

ITEM	PART NUMBER	QTY	LINE	SERIES	BODY	ENGINE	TRANS	TRIM	DESCRIPTION
		2	3, 7	L	12, 15, 16				D-Pillar, Left
	5104 281AA	1	2, 6	L	11, 12, 14, 15, 16				D-Pillar, Right
		1	2, 6	L	51, 52, 54, 55, 56				D-Pillar, Right
		1	3, 7	L	12, 15, 16				D-Pillar, Right
5	5104 624AA	6	2, 6	L	11, 12, 14, 15, 16				RIVET
		6	2, 6	L	51, 52, 54, 55, 56				
		6	3, 7	L	12, 15, 16				

Refer to Model Legend Information Bookmark

Cowl Panel - Silencer
Figure IVA-250

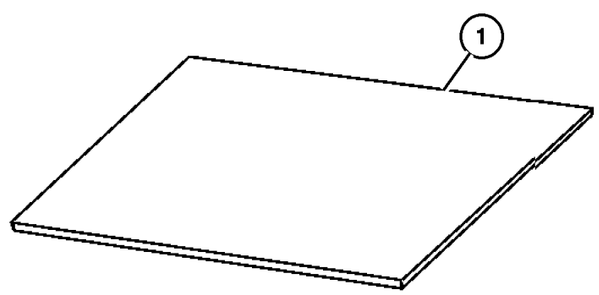

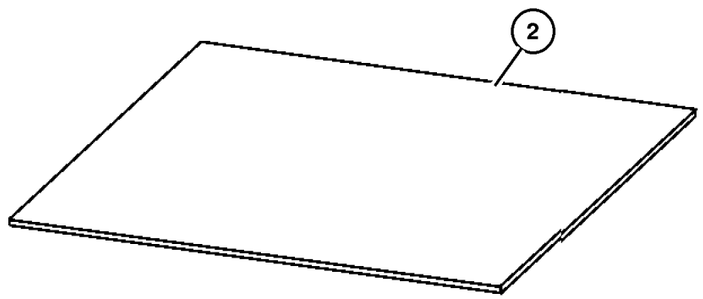

ITEM	PART NUMBER	QTY	LINE	SERIES	BODY	ENGINE	TRANS	TRIM	DESCRIPTION
1									SILENCER, Cowl Side
	5133 640AA	1	3, 7	L	02, 06				Left Front
		1	3, 7	L	12, 15, 16				Left Front
	5133 641AA	1	3, 7	L	02, 06				Right Front
		1	3, 7	L	12, 15, 16				Right Front
2									SILENCER, Cowl Side
	5133 642AA	1	3, 7	L	02, 06				Left Rear
		1	3, 7	L	12, 15, 16				Left Rear
	5133 643AA	1	3, 7	L	02, 06				Right Rear
		1	3, 7	L	12, 15, 16				Right Rear

Refer to Model Legend Information Bookmark

Partition Panel
Figure IVA-255

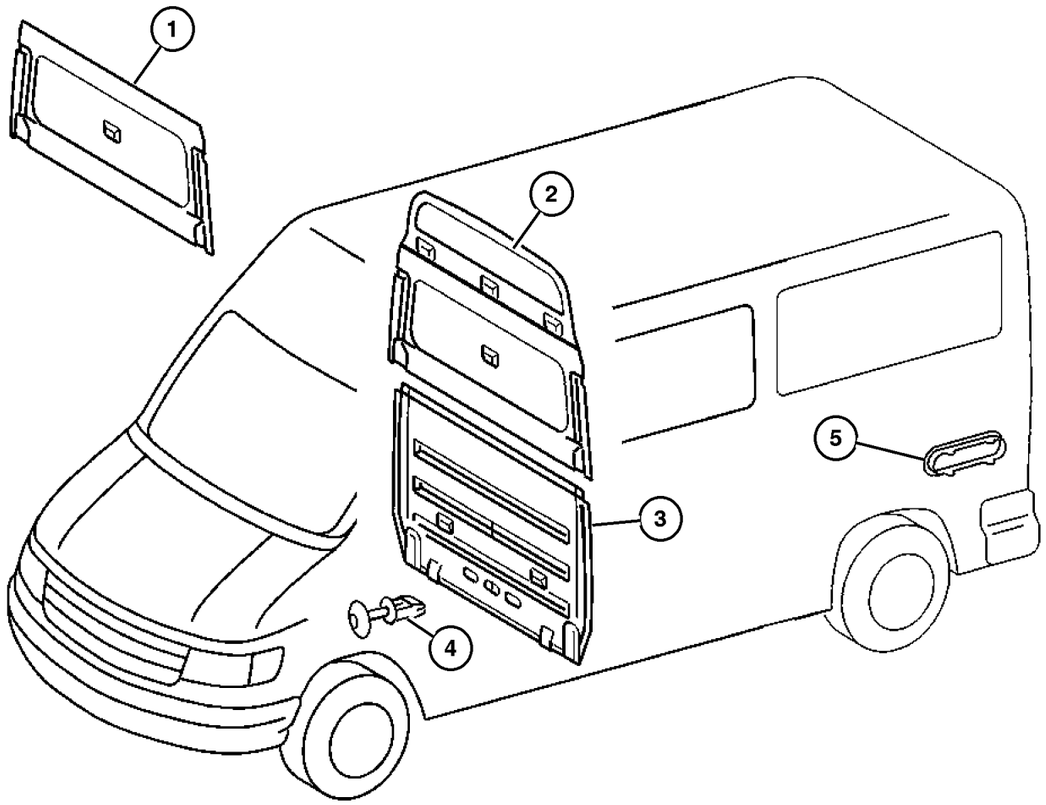

ITEM	PART NUMBER	QTY	LINE	SERIES	BODY	ENGINE	TRANS	TRIM	DESCRIPTION
1									PANEL, Quarter
	5122 967AA	1	2, 6	L	11				Without Window
		1	3, 7	L	12				Without Window
	5122 969AA	1	2, 6	L	11				With Window
		1	3, 7	L	12				With Window
2									PANEL, Quarter
	5122 971AA	1	2, 6	L	14, 15, 16				
		1	3, 7	L	15, 16				
3									PANEL, Quarter
	5122 962AA	1	2, 6	L	11, 12, 14, 15, 16				
		1	3, 7	L	12, 15, 16				
4									RIVET
	5125 808AA	7	2, 6	L	11, 12, 14, 15, 16				
		7	3, 7	L	12, 15, 16				
5									EXHAUSTER, Quarter Panel
	5123 426AA	2	2, 6	L	01, 02, 06				
		2	2, 6	L	11, 12, 14, 15, 16				
		2	2, 6	L	51, 52, 54, 55, 56				
		2	3, 7	L	02, 06				
		2	3, 7	L	12, 15, 16				

Refer to Model Legend Information Bookmark

AR = Use as required - = Non illustrated part # = New this model year

March 3, 2006

« RETURN TO GROUP INDEX

Partition Wall and Sliding Door
Figure IVA-260

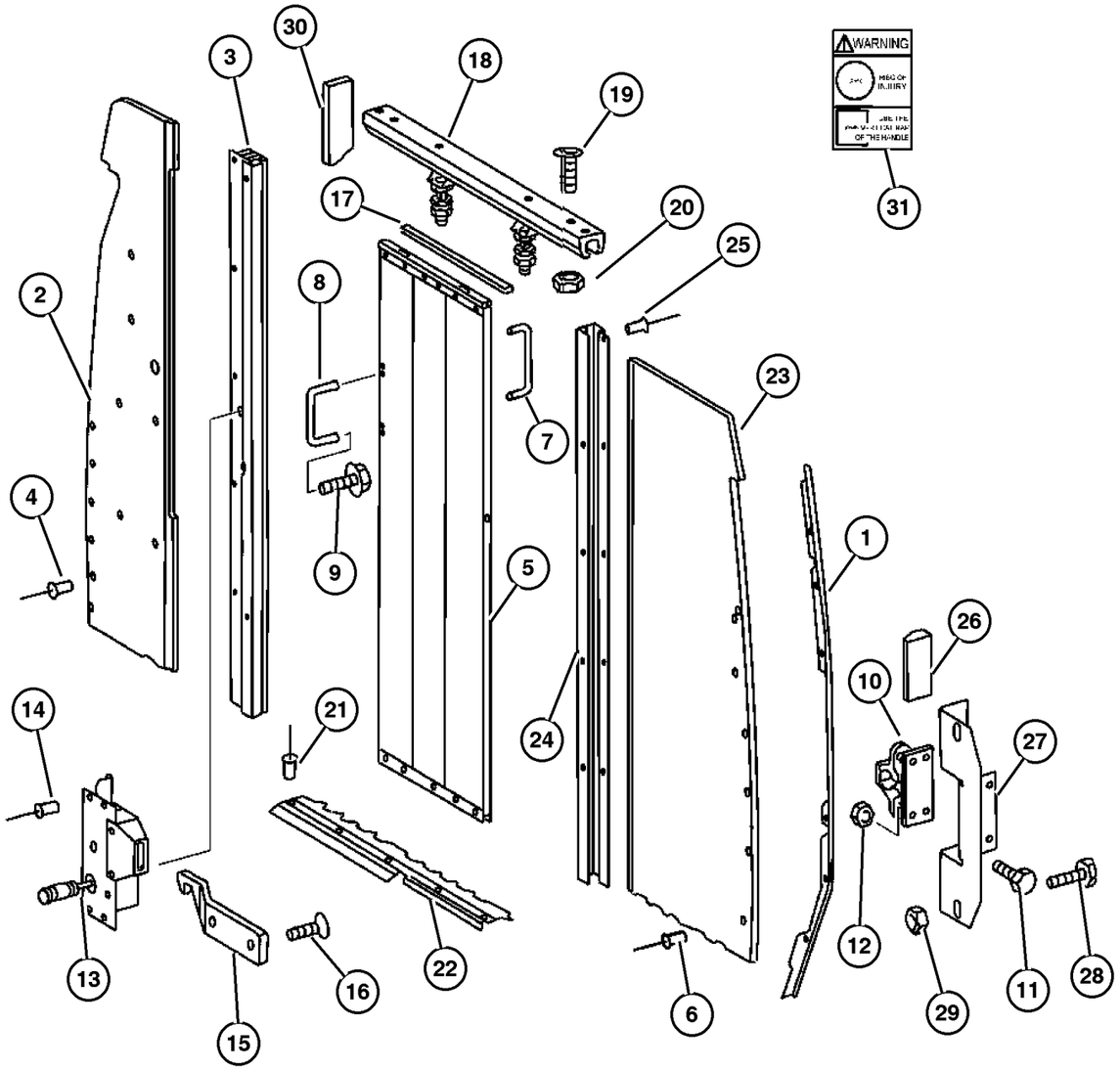

ITEM	PART NUMBER	QTY	LINE	SERIES	BODY	ENGINE	TRANS	TRIM	DESCRIPTION
1									PANEL EXTENSION, Extension, W/O Slide
	5104 315AA	1	2, 6	L	11, 12, 14, 15, 16				
		1	3, 7	L	12, 15, 16				
2									PARTITION, Cargo
	5104 318AA	1	2, 6	L	14, 15, 16				
		1	3, 7	L	15, 16				
3									RAIL, Cargo Partition, Sliding Door
	5104 306AA	1	2, 6	L	14, 15, 16				
		1	2, 6	L	11, 12				
		1	3, 7	L	15, 16				
		1	3, 7	L	12				
4									RIVET, Blind Bulb
	5125 811AA	7	2, 6	L	11, 12, 14, 15, 16				
		7	3, 7	L	12, 15, 16				
5									PANEL, Cargo Compartment, Without Windows
	5123 575AA	1	2, 6	L	14, 15, 16				
		1	3, 7	L	15, 16				
6									RIVET, Blind
	5126 108AA	5	2, 6	L	11, 12, 14, 15, 16				
		5	3, 7	L	12, 15, 16				
	5126 109AA	25	2, 6	L	11, 12, 14, 15, 16				
		25	3, 7	L	12, 15, 16				
7									HANDLE, Cargo Door Interior
	5123 662AA	1	2, 6	L	11, 12, 14, 15, 16				
		1	3, 7	L	12, 15, 16				
8									HANDLE, Cargo Door Interior

Refer to Model Legend Information Bookmark

AR = Use as required - = Non illustrated part # = New this model year

March 3, 2006

« RETURN TO GROUP INDEX

»

Partition Wall and Sliding Door
Figure IVA-260

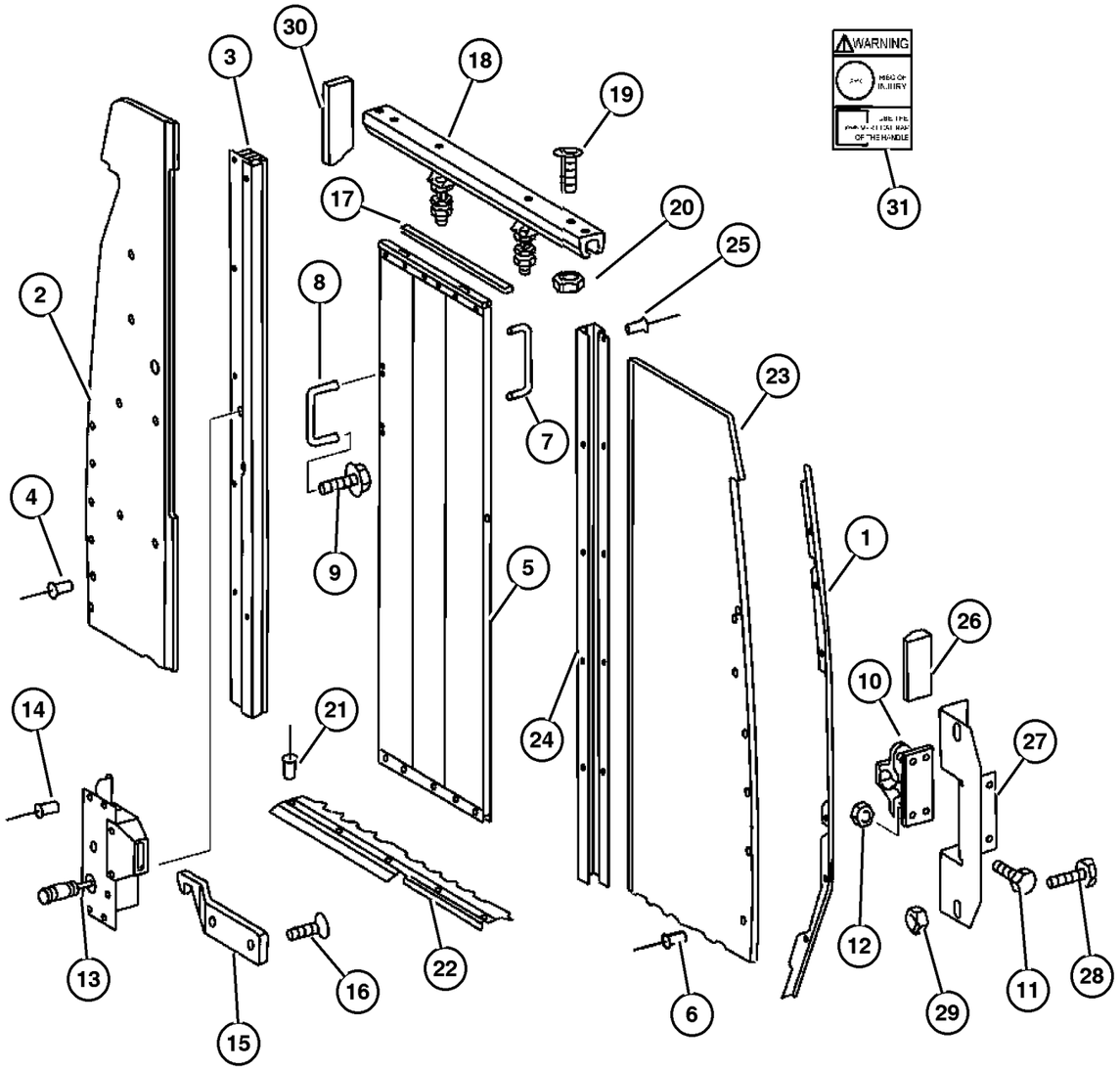

ITEM	PART NUMBER	QTY	LINE	SERIES	BODY	ENGINE	TRANS	TRIM	DESCRIPTION
	5123 663AA	1	2, 6	L	11, 12, 14, 15, 16				
		1	3, 7	L	12, 15, 16				
9	6104 119AA	4	2, 6	L	11, 12, 14, 15, 16				SCREW
		4	3, 7	L	12, 15, 16				
10	5104 419AA	1	2, 6	L	11, 12, 14, 15, 16				ADJUSTER, Cargo Door
		1	3, 7	L	12, 15, 16				
11	5104 652AB	4	2, 6	L	11, 12, 14, 15, 16				SCREW
		4	3, 7	L	12, 15, 16				
12	5104 660AA	4	2, 6	L	11, 12, 14, 15, 16				NUT
		2	3, 7	L	02, 06				
		2	3, 7	L	12, 15, 16				
13	5104 303AA	1	2, 6	L	11, 12, 14, 15, 16				LATCH
		1	3, 7	L	12, 15, 16				
14	5104 623AA	4	2, 6	L	11, 12, 14, 15, 16				RIVET
		4	3, 7	L	12, 15, 16				
15									CATCH, Sliding Partition Door

Refer to Model Legend Information Bookmark

AR = Use as required - = Non illustrated part # = New this model year

March 3, 2006

« RETURN TO GROUP INDEX

Partition Wall and Sliding Door
Figure IVA-260

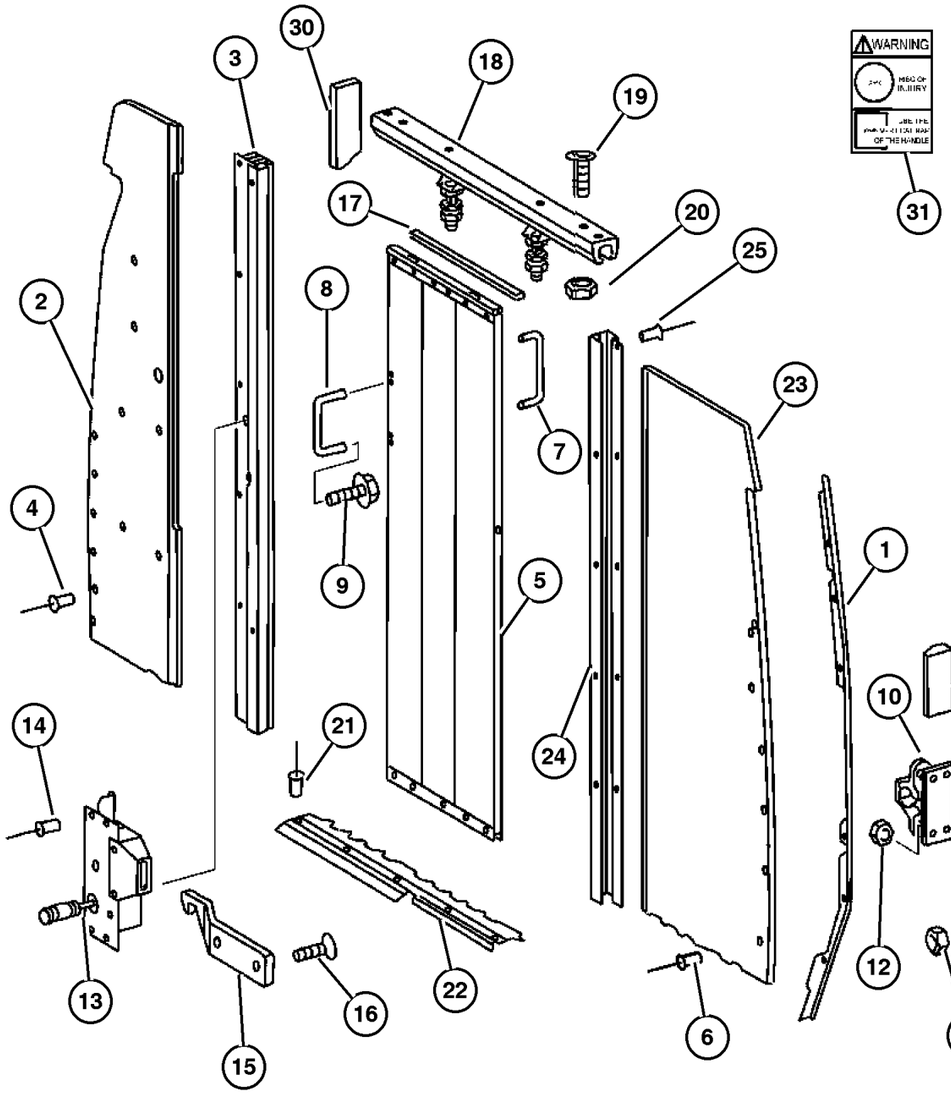

ITEM	PART NUMBER	QTY	LINE	SERIES	BODY	ENGINE	TRANS	TRIM	DESCRIPTION
	5104 424AA	1	2, 6	L	11, 12, 14, 15, 16				
		1	3, 7	L	12, 15, 16				
16									SCREW, Hex Flange Head
	6104 121AA	4	2, 6	L	01, 02, 06				
		4	2, 6	L	11, 12, 14, 15, 16				
		4	3, 7	L	02, 06				
17									GUARD, Door Edge
	5103 782AA	60	2, 6	L	11, 12, 14, 15, 16				
		100	3, 7	L	02, 06				
		100	3, 7	L	12, 15, 16				
18									RAIL, Cargo Partition, Sliding Door
	5123 585AA	1	2, 6	L	11, 12, 14, 15, 16				
		1	3, 7	L	12, 15, 16				
19									SCREW, Hex Head
	5126 110AA	1	2, 6	L	11, 12, 14, 15, 16				
		1	3, 7	L	12, 15, 16				
20									NUT
	6104 714AA	5	2, 6	L	11, 12, 14, 15, 16				
		3	3, 7	L	12, 15, 16				
21									RIVET
	5104 623AA	5	2, 6	L	11, 12, 14, 15, 16				
		4	3, 7	L	12, 15, 16				
22									MOLDING, Cargo Area Carpet

Refer to Model Legend Information Bookmark

AR = Use as required - = Non illustrated part # = New this model year

March 3, 2006

« RETURN TO GROUP INDEX

Partition Wall and Sliding Door
Figure IVA-260

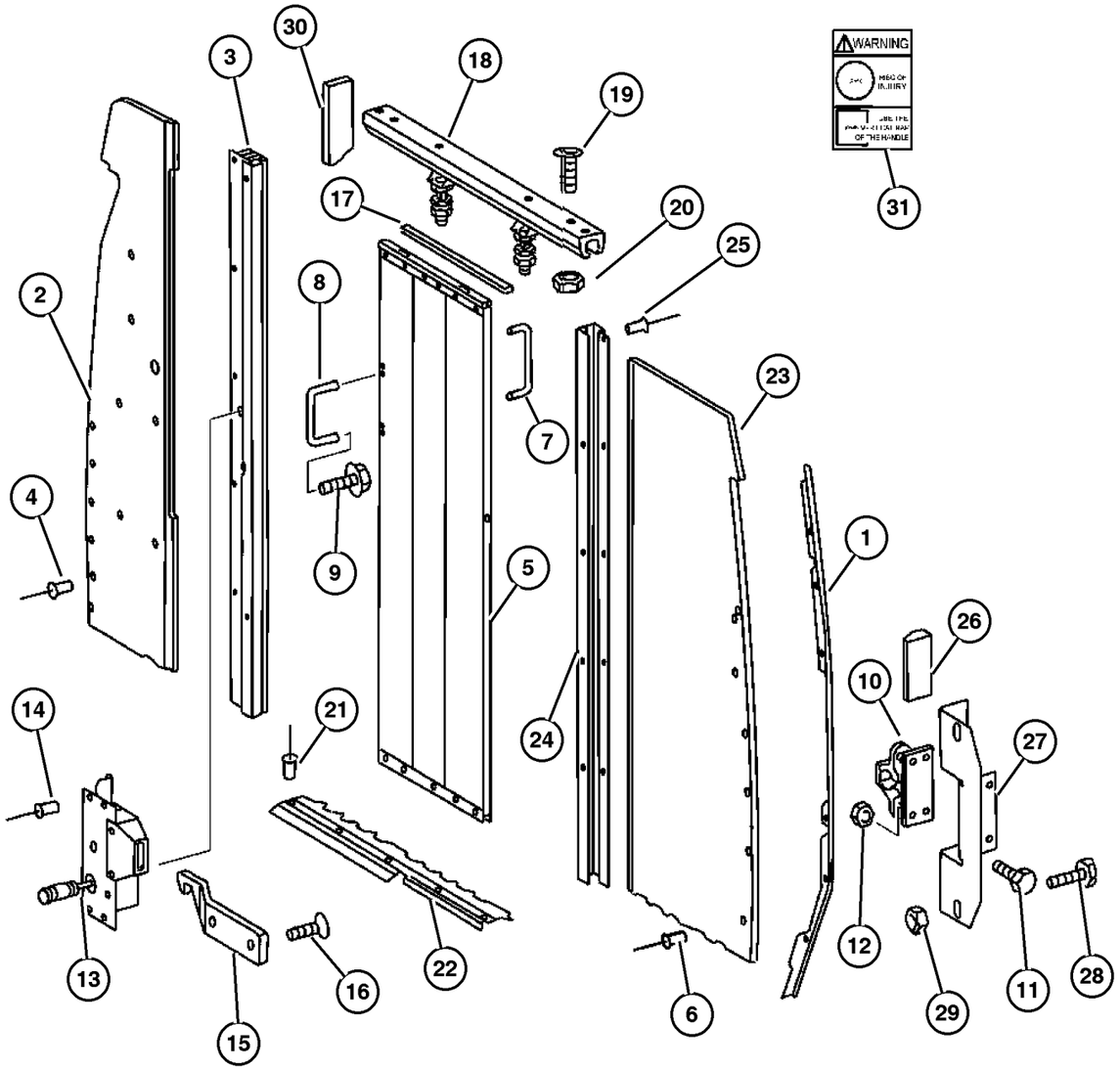

ITEM	PART NUMBER	QTY	LINE	SERIES	BODY	ENGINE	TRANS	TRIM	DESCRIPTION
	5104 156AA	1	2, 6	L	11, 12, 14, 15, 16				
		1	3, 7	L	12, 15, 16				
23									PARTITION, Cargo
	5104 317AA	1	2, 6	L	14, 15, 16				
		1	3, 7	L	15, 16				
24									RAIL, Cargo Partition, Sliding Door
	5104 309AA	1	2, 6	L	14, 15, 16				
		1	2, 6	L	11, 12				
		1	3, 7	L	15, 16				
		1	3, 7	L	12				
25									RIVET
	5125 812AA	9	2, 6	L	11, 12, 14, 15, 16				
		9	3, 7	L	12, 15, 16				
26									BUMPER, Rubber
	5104 427AA	2	2, 6	L	11, 12, 14, 15, 16				
		2	2, 6	L	51, 52, 54, 55, 56				
		2	3, 7	L	12, 15, 16				
27									HOUSING
	5104 305AA	1	2, 6	L	11, 12, 14, 15, 16				
	5120 273AA	1	2, 6	L	01, 02, 06				
28									BOLT, Hex Head
	5126 132AA	2	2, 6	L	11, 12, 14, 15, 16				
		2	3, 7	L	12, 15, 16				
29									NUT

Refer to Model Legend Information Bookmark

AR = Use as required - = Non illustrated part # = New this model year

March 3, 2006

« RETURN TO GROUP INDEX

Partition Wall and Sliding Door
Figure IVA-260

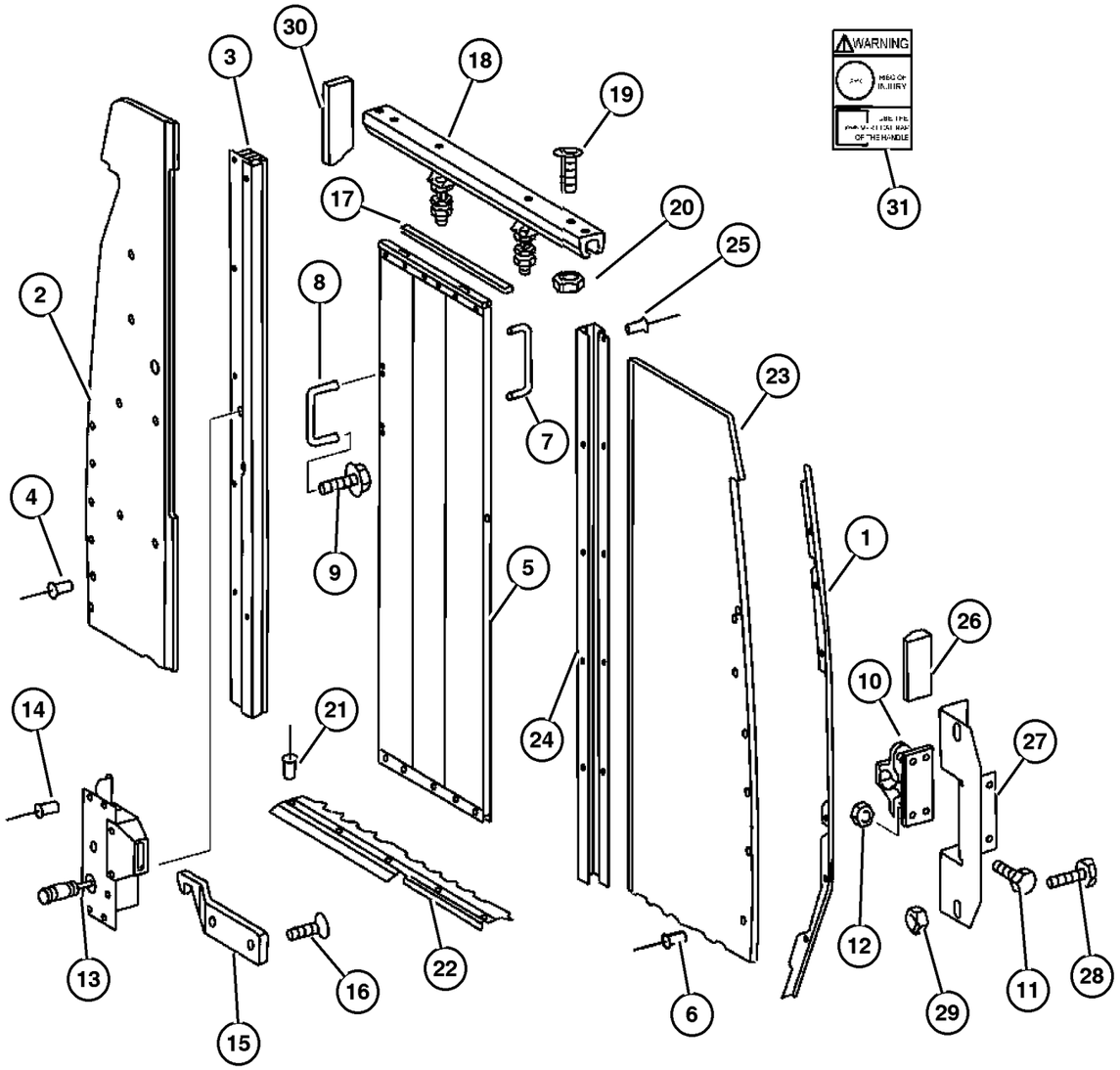

ITEM	PART NUMBER	QTY	LINE	SERIES	BODY	ENGINE	TRANS	TRIM	DESCRIPTION
	6104 716AA	2	2, 6	L	11, 12, 14, 15, 16				
		8	2, 6	L	51, 52, 54, 55, 56				
		4	3, 7	L	02, 06				
30									SEAL
	5123 661AA	1	2, 6	L	14, 15, 16				
		1	3, 7	L	15, 16				
31									LABEL, Warning
	5121 162AA	1	2, 6	L	11, 12, 14, 15, 16				
		1	3, 7	L	12, 15, 16				
-32									LABEL, Gummed Label on Door
	5121 146AA-	1	2, 6	L	11, 12, 14, 15, 16				
		1	3, 7	L	12, 15, 16				
-33									BOLT, Door to Guide
	5125 721AA-	2	2, 6	L	11, 12, 14, 15, 16				
		2	3, 7	L	12, 15, 16				
-34									NUT, Door to Guide
	5126 126AA-	4	2, 6	L	11, 12, 14, 15, 16				
		4	3, 7	L	12, 15, 16				
-35									NUT, Hex, Door to Guide
	5126 208AA-	4	2, 6	L	11, 12, 14, 15, 16				
		4	3, 7	L	12, 15, 16				

Refer to Model Legend Information Bookmark

AR = Use as required - = Non illustrated part # = New this model year

March 3, 2006

« RETURN TO GROUP INDEX

Carpet - Floor
Figure IVA-310

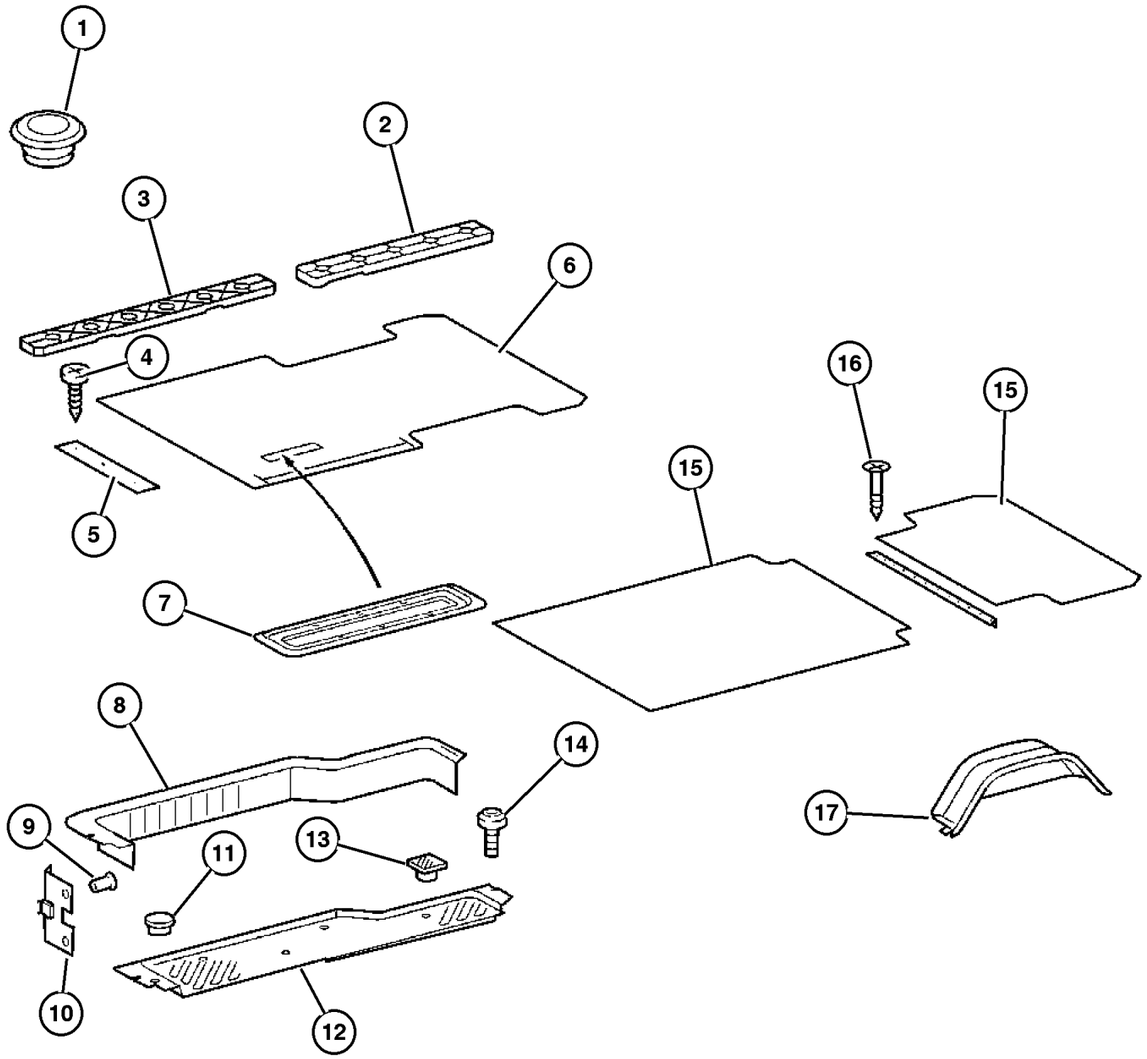

ITEM	PART NUMBER	QTY	LINE	SERIES	BODY	ENGINE	TRANS	TRIM	DESCRIPTION
1									PLUG
	5125 991AA	2	2, 6	L	11, 12, 14, 15, 16				
		99	2, 6	L	51, 52, 54, 55, 56				
		2	3, 7	L	12, 15, 16				
2									COVER, Seat Track
	5122 642AA	1	2, 6	L	12, 15				Rear
		1	2, 6	L	11, 14				Rear
		1	2, 6	L	51, 52, 54, 55, 56				Rear
		1	3, 7	L	12, 15, 16				Rear
3									COVER, Seat Track
	5122 650AA	2	2, 6	L	11, 12, 14, 15, 16				Front
		2	2, 6	L	51, 52, 54, 55, 56				Front
		2	3, 7	L	12, 15, 16				Front
4									SCREW, (NOT SERVICED) (Not Serviced)
5									PLATE
	5122 835AA	1	2, 6	L	11, 12, 14, 15, 16				Carpet Ledge, Sliding Door
		1	2, 6	L	51, 52, 54, 55, 56				Carpet Ledge, Sliding Door
		1	3, 7	L	12, 15, 16				Carpet Ledge, Sliding Door
6									LINING, NONE, SPRINTER, (NOT SERVICED) (Not Serviced)
7									COVERING, NONE, SPRINTER, (NOT SERVICED) (Not Serviced)
8									PANEL, Sliding Door Trim
	5122 827AA	1	2, 6	L	11, 12, 14, 15, 16				

Refer to Model Legend Information Bookmark

Carpet - Floor
Figure IVA-310

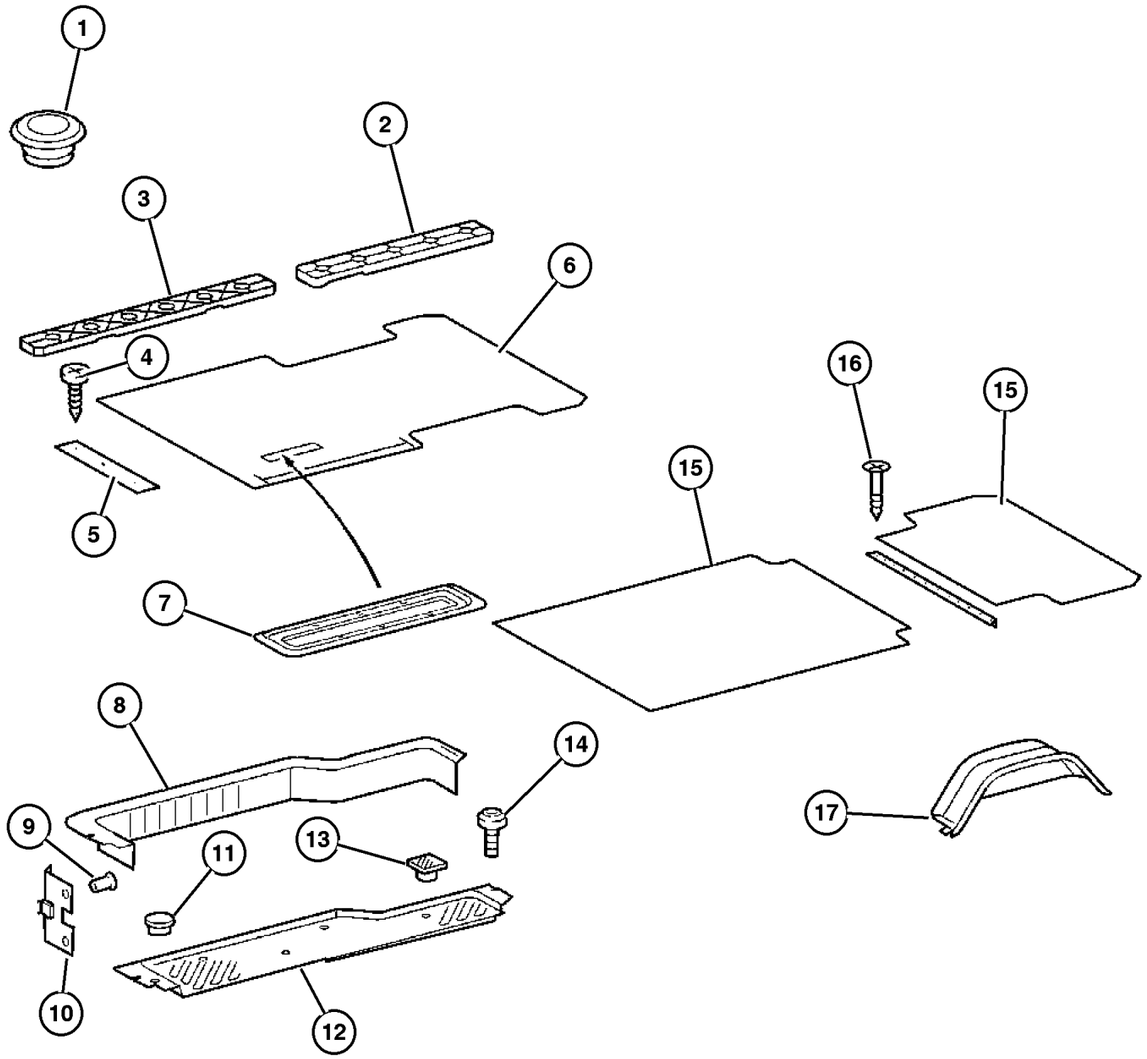

ITEM	PART NUMBER	QTY	LINE	SERIES	BODY	ENGINE	TRANS	TRIM	DESCRIPTION
		1	2, 6	L	51, 52, 54, 55, 56				
		1	3, 7	L	12, 15, 16				
9									RIVET
	5134 061AA	8	2, 6	L	11, 12, 14, 15, 16				
		8	2, 6	L	51, 52, 54, 55, 56				
		8	3, 7	L	12, 15, 16				
10									CLIP, Floor Trim
	5125 584AA	8	2, 6	L	11, 12, 14, 15, 16				
		4	2, 6	L	51, 52, 54, 55, 56				
		4	3, 7	L	12, 15, 16				
11									PLUG
	5122 808AA	1	2, 6	L	11, 12, 14, 15, 16				
		1	2, 6	L	51, 52, 54, 55, 56				
		1	3, 7	L	12, 15, 16				
12									PAD, Side Cargo Door Sill
	5122 815AA	1	2, 6	L	11, 12, 14, 15, 16				Entrance, Sliding Door,Left
		1	2, 6	L	51, 52, 54, 55, 56				Entrance, Sliding Door,Left
		1	3, 7	L	12, 15, 16				Entrance, Sliding Door,Left
	5122 816AA	1	2, 6	L	11, 12, 14, 15, 16				Entrance, Sliding Door,Right

Refer to Model Legend Information Bookmark

AR = Use as required - = Non illustrated part # = New this model year

March 3, 2006

« RETURN TO GROUP INDEX

Carpet - Floor
Figure IVA-310

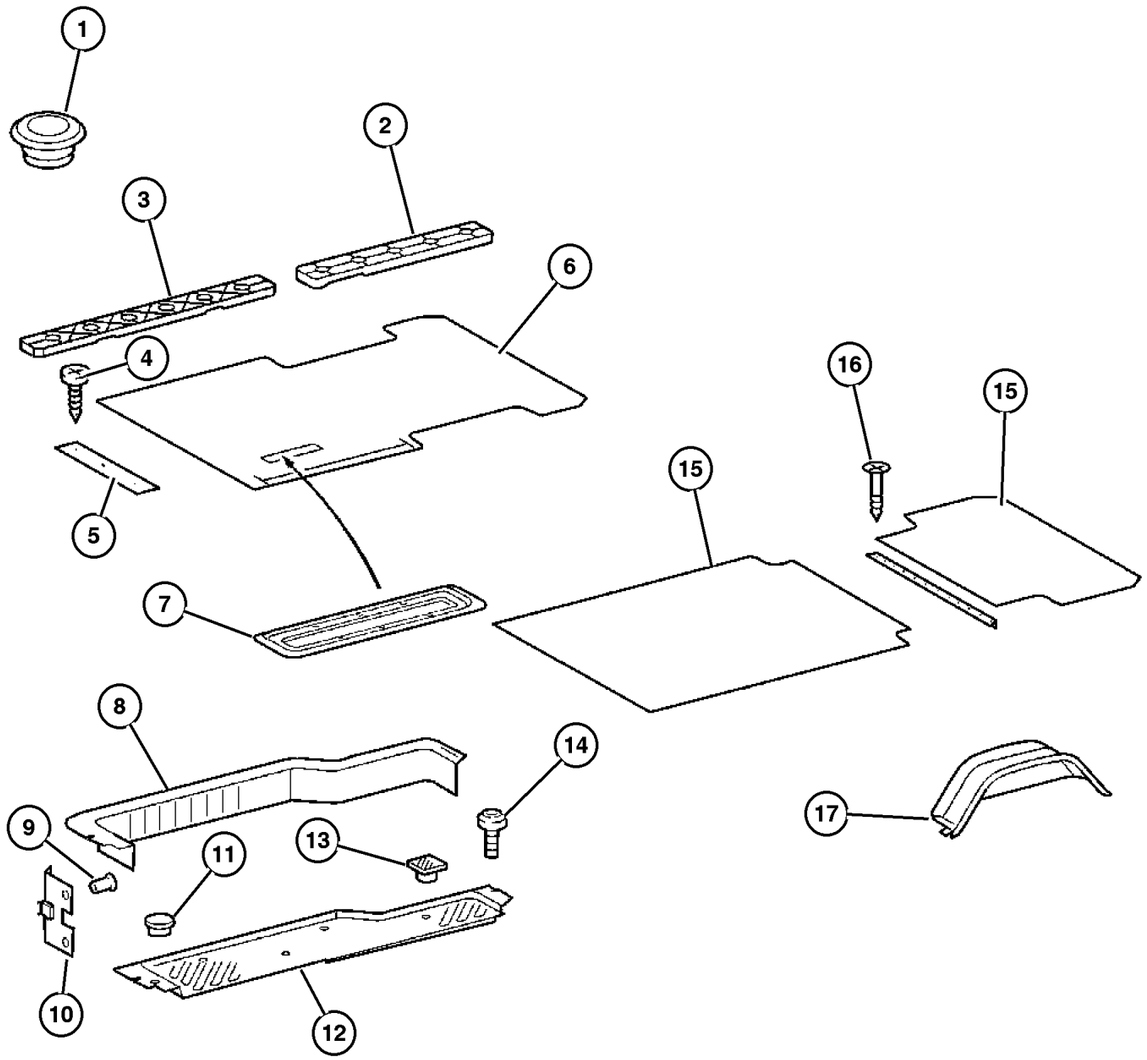

ITEM	PART NUMBER	QTY	LINE	SERIES	BODY	ENGINE	TRANS	TRIM	DESCRIPTION
		1	2, 6	L	51, 52, 54, 55, 56				Entrance, Sliding Door,Right
		1	3, 7	L	12, 15, 16				Entrance, Sliding Door,Right
13									PLUG
	5122 811AA	4	2, 6	L	11, 12, 14, 15, 16				
		4	2, 6	L	51, 52, 54, 55, 56				
		4	3, 7	L	12, 15, 16				
14									SCREW
	6104 142AA	2	2, 6	L	11, 12, 14, 15, 16				
		2	2, 6	L	51, 52, 54, 55, 56				
		2	3, 7	L	02, 06				
		2	3, 7	L	12, 15, 16				
15									LINING, NONE, SPRINTER, (NOT SERVICED) (Not Serviced)
16	5134 062AA	9	3, 7	L	12, 15, 16				SCREW
17									MAT, Wheelhouse
	5122 563AA	2	3, 7	L	12, 15, 16				
	5131 453AA	2	2, 6	L	11, 12, 14, 15, 16				
		2	2, 6	L	51, 52, 54, 55, 56				
-18									MOLDING, Cargo Area Carpet Threshold for Partition Door
	5104 156AA-	1	2, 6	L	11, 12, 14, 15, 16				
		1	3, 7	L	12, 15, 16				

Refer to Model Legend Information Bookmark

Floor Lining, Entry Paneling & Footrest
Figure IVA-315

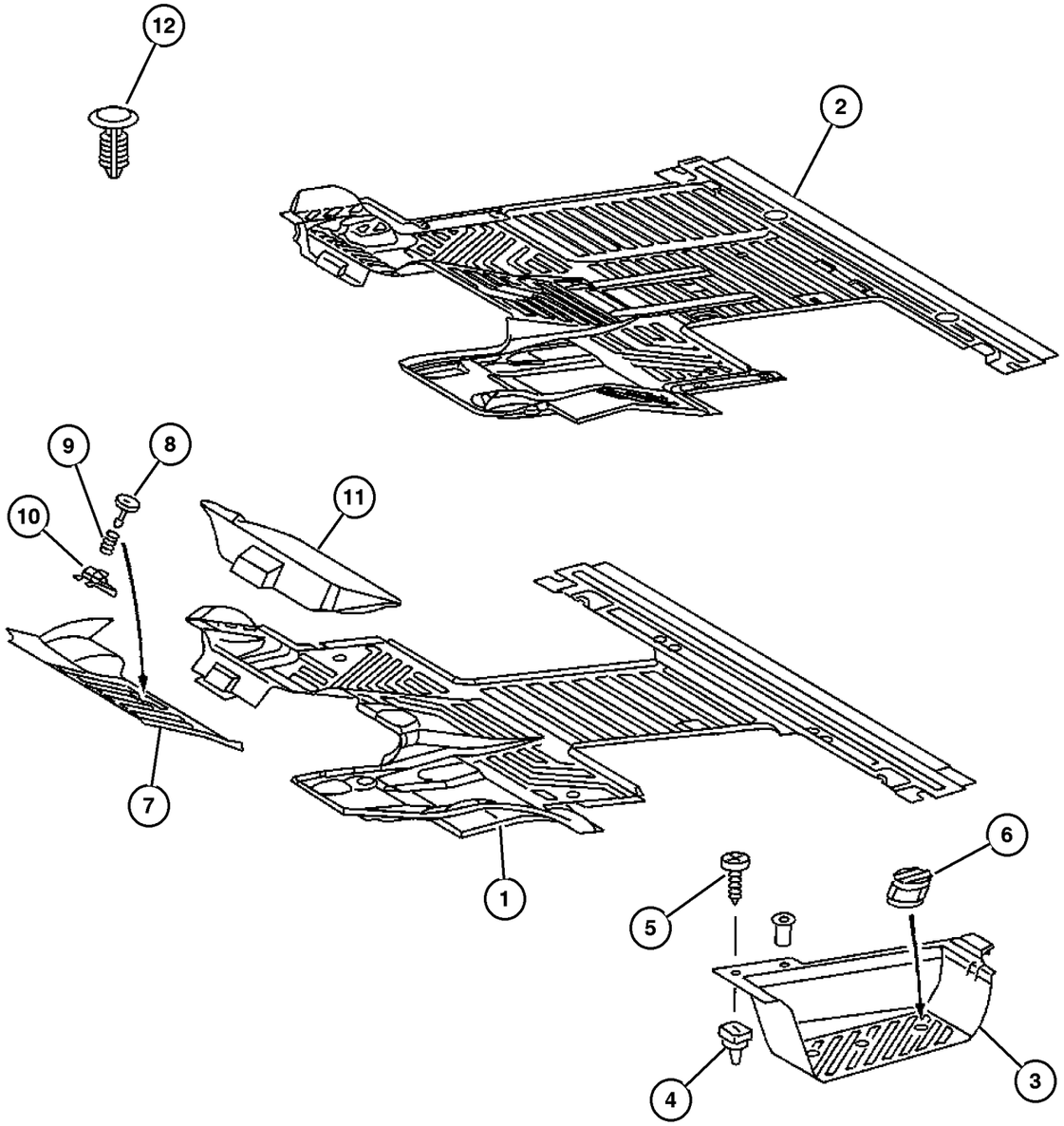

ITEM	PART NUMBER	QTY	LINE	SERIES	BODY	ENGINE	TRANS	TRIM	DESCRIPTION
1									MAT, Front Floor, Rubber
	5122 614AA	1	2, 6	L	11, 12, 14, 15, 16				Lining
		1	2, 6	L	51, 52, 54, 55, 56				Lining
	5122 633AA	1	2, 6	L	11, 12, 14, 15, 16				Rubber
		1	2, 6	L	51, 52, 54, 55, 56				Rubber
		1	3, 7	L	12, 15, 16				Rubber
	5122 640AA	1	2, 6	L	11, 12, 14, 15, 16				Rubber, With Floor Console
		1	2, 6	L	51, 52, 54, 55, 56				Rubber, With Floor Console
		1	3, 7	L	12, 15, 16				Rubber, With Floor Console
2									MAT, Front Floor, Rubber
	5104 264AA	1	2, 6	L	11, 12, 14, 15, 16				With Partition Wall
		1	3, 7	L	12, 15, 16				With Partition Wall
	5122 635AA	1	2, 6	L	11, 12, 14, 15, 16				With Center Console
		1	2, 6	L	51, 52, 54, 55, 56				With Center Console
		1	3, 7	L	12, 15, 16				With Center Console
3									PLATE, Scuff
	5104 265AA	1	2, 6	L	01, 02, 06				Left
		1	2, 6	L	11, 12, 14, 15, 16				Left

Refer to Model Legend Information Bookmark

Floor Lining, Entry Paneling & Footrest
Figure IVA-315

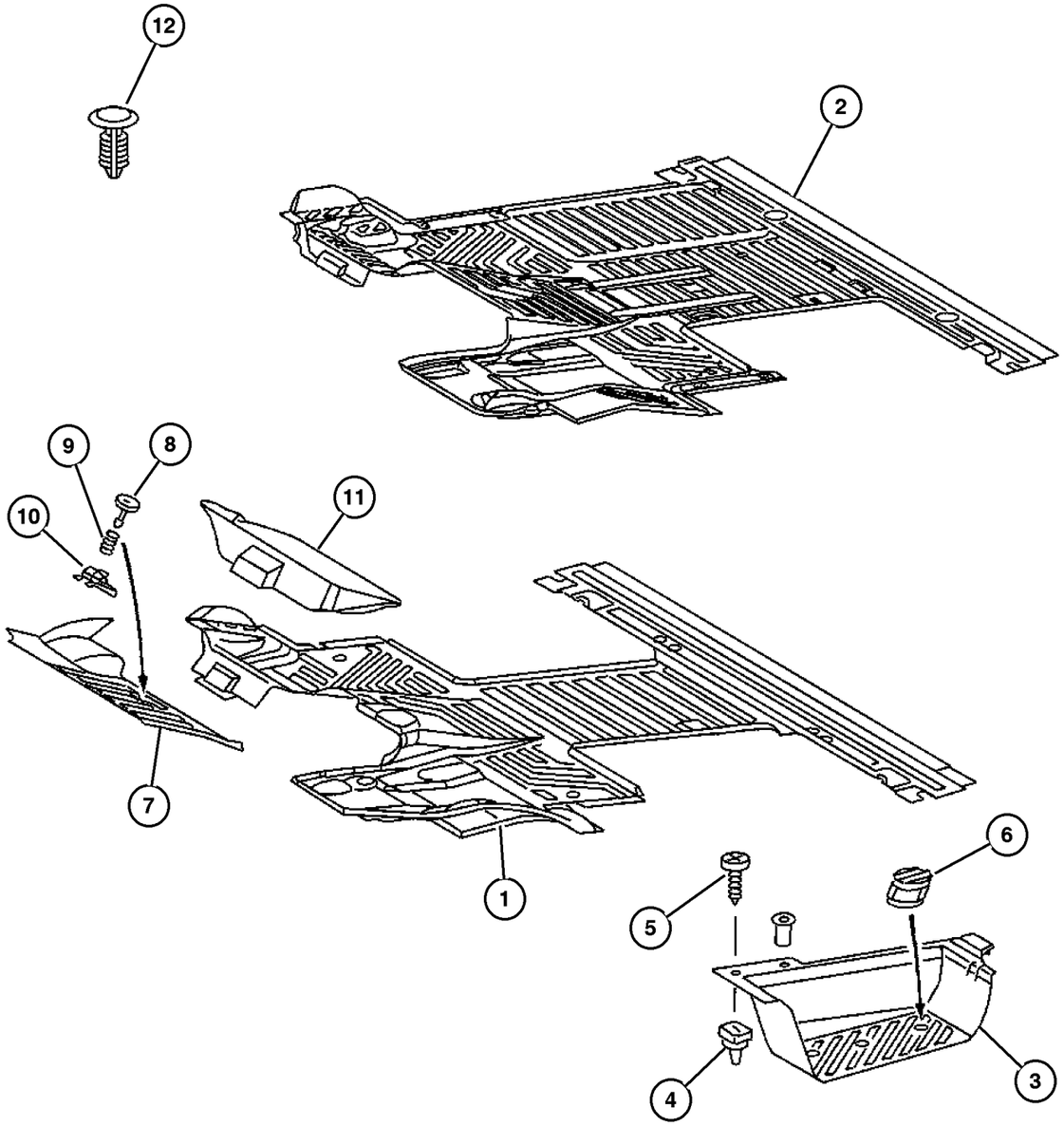

ITEM	PART NUMBER	QTY	LINE	SERIES	BODY	ENGINE	TRANS	TRIM	DESCRIPTION
		1	2, 6	L	51, 52, 54, 55, 56				Left
		1	3, 7	L	02, 06				Left
		1	3, 7	L	12, 15, 16				Left
	5122 821AA	1	2, 6	L	01, 02, 06				Right
		1	2, 6	L	11, 12, 14, 15, 16				Right
		1	2, 6	L	51, 52, 54, 55, 56				Right
	5122 822AA	1	2, 6	L	01, 02, 06				Illuminated Exit, Left
		1	2, 6	L	11, 12, 14, 15, 16				Illuminated Exit, Left
		1	2, 6	L	51, 52, 54, 55, 56				Illuminated Exit, Left
		1	3, 7	L	02, 06				Illuminated Exit, Left
		1	3, 7	L	12, 15, 16				Illuminated Exit, Left
	5122 824AA	1	2, 6	L	01, 02, 06				Illuminated Exit, Right
		1	2, 6	L	11, 12, 14, 15, 16				Illuminated Exit, Right
		1	2, 6	L	51, 52, 54, 55, 56				Illuminated Exit, Right
		1	3, 7	L	02, 06				Illuminated Exit, Right
		1	3, 7	L	12, 15, 16				Illuminated Exit, Right
4									NUT, Plastic Snap-in
	5098 837AB	6	2, 6	L	01, 02, 06				
		6	2, 6	L	11, 12, 14, 15, 16				
		6	2, 6	L	51, 52, 54, 55, 56				

Refer to Model Legend Information Bookmark

AR = Use as required - = Non illustrated part # = New this model year

March 3, 2006

Floor Lining, Entry Paneling & Footrest
Figure IVA-315

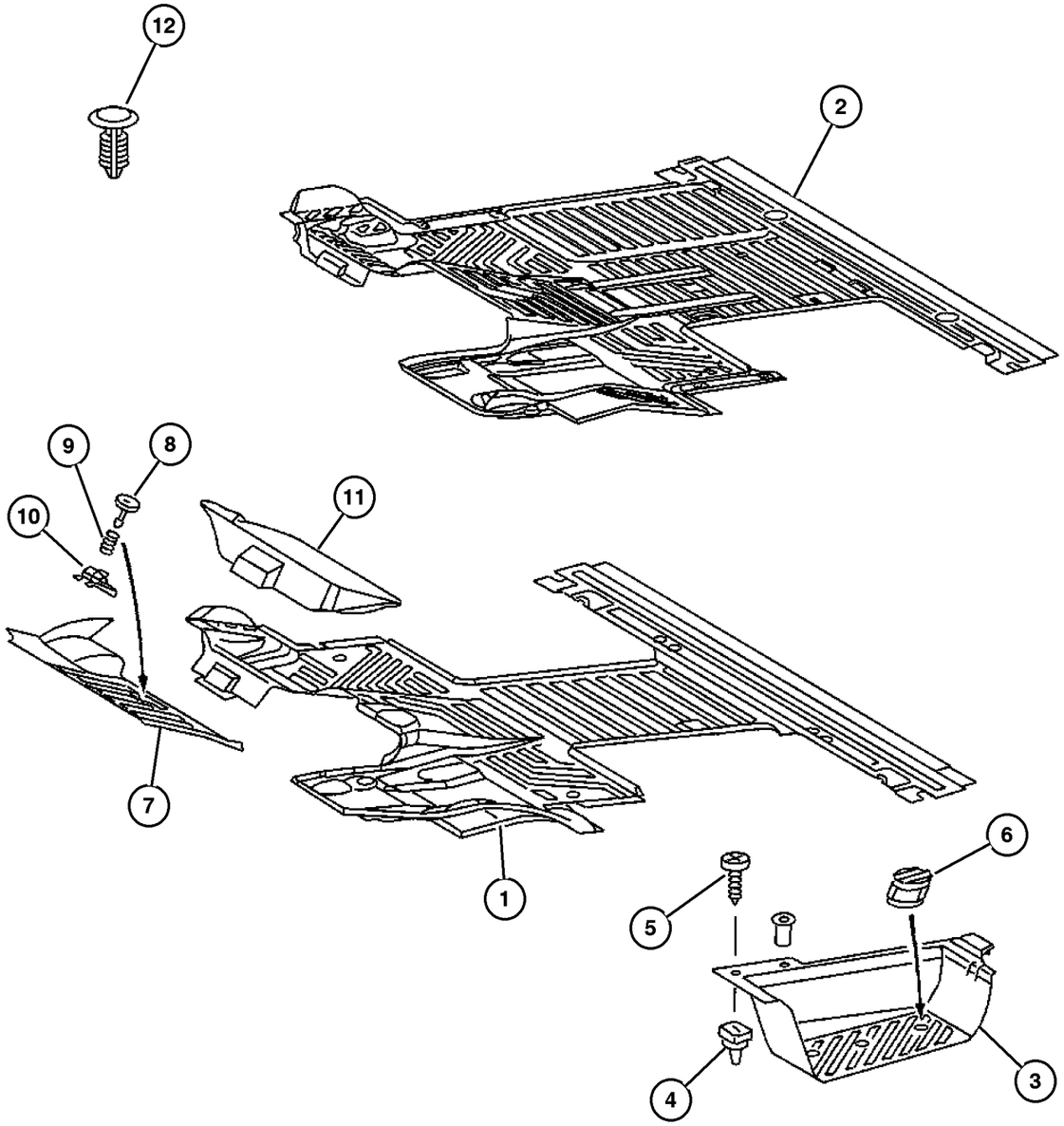

ITEM	PART NUMBER	QTY	LINE	SERIES	BODY	ENGINE	TRANS	TRIM	DESCRIPTION
		2	3, 7	L	02, 06				
		16	3, 7	L	12, 15, 16				
5									SCREW
	6104 575AA	6	2, 6	L	01, 02, 06				
		6	2, 6	L	11, 12, 14, 15, 16				
		6	2, 6	L	51, 52, 54, 55, 56				
		6	3, 7	L	02, 06				
		6	3, 7	L	12, 15, 16				
6									PLUG
	5104 549AA	3	2, 6	L	01, 02, 06				
		3	2, 6	L	11, 12, 14, 15, 16				
		3	2, 6	L	51, 52, 54, 55, 56				
		3	3, 7	L	02, 06				
		3	3, 7	L	12, 15, 16				
7									COVER, Jack
	5122 408AA	1	2, 6	L	01, 02, 06				
		1	2, 6	L	11, 12, 14, 15, 16				
		1	2, 6	L	51, 52, 54, 55, 56				
		1	3, 7	L	02, 06				
		1	3, 7	L	12, 15, 16				
8									FASTENER, Footrest
	5122 665AA	1	2, 6	L	01, 02, 06				
		1	2, 6	L	11, 12, 14, 15, 16				

Refer to Model Legend Information Bookmark

AR = Use as required - = Non illustrated part # = New this model year

March 3, 2006

« RETURN TO GROUP INDEX

Floor Lining, Entry Paneling & Footrest
Figure IVA-315

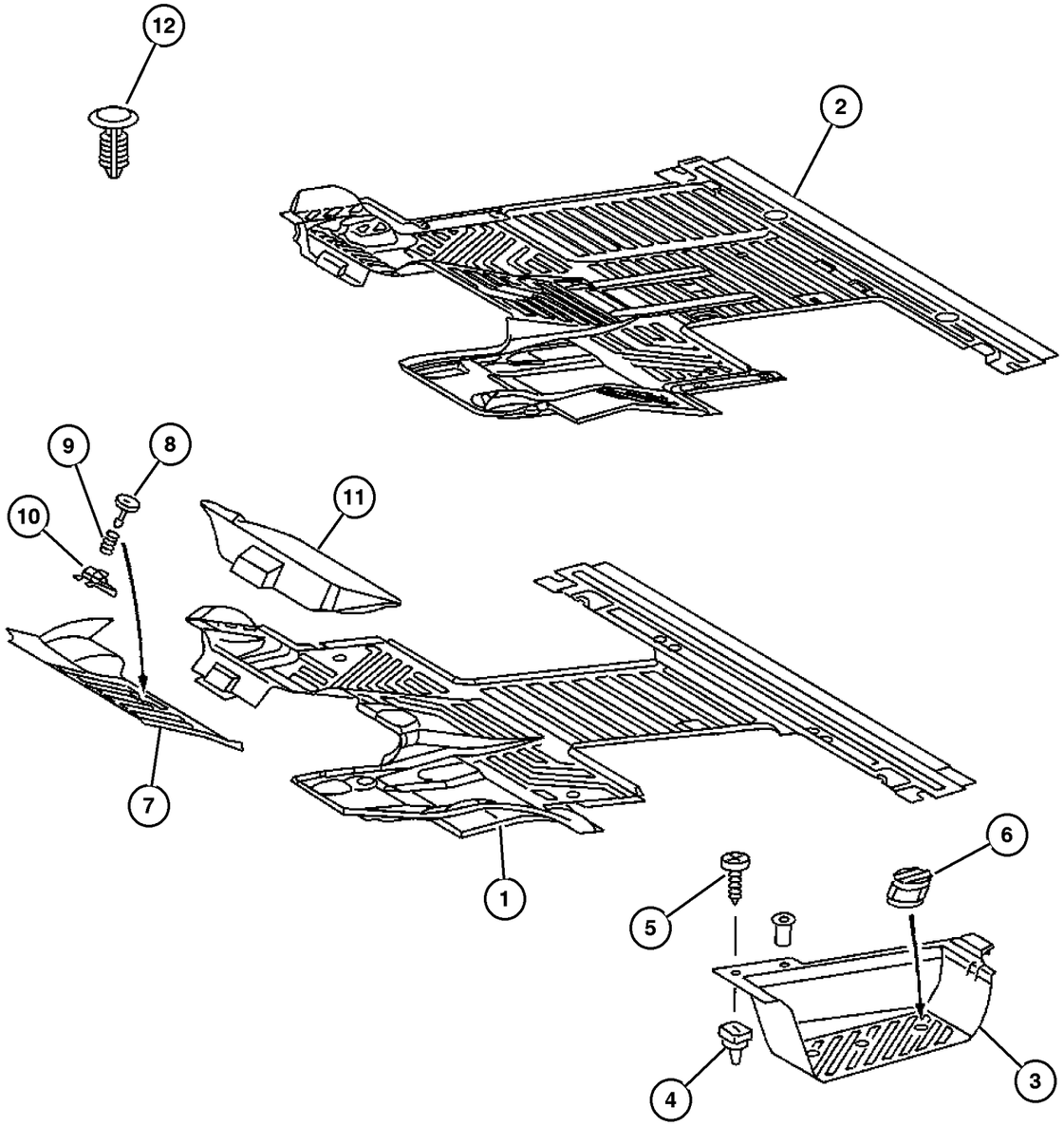

ITEM	PART NUMBER	QTY	LINE	SERIES	BODY	ENGINE	TRANS	TRIM	DESCRIPTION
		1	2, 6	L	51, 52,				
					54, 55,				
					56				
		1	3, 7	L	02, 06				
		1	3, 7	L	12, 15,				
					16				
9									SPRING
	5125 845AA	1	2, 6	L	01, 02,				
					06				
		1	2, 6	L	11, 12,				
					14, 15,				
					16				
		1	2, 6	L	51, 52,				
					54, 55,				
					56				
		1	3, 7	L	02, 06				
		1	3, 7	L	12, 15,				
					16				
10									CLIP, Footrest
	5125 587AA	1	2, 6	L	01, 02,				
					06				
		1	2, 6	L	11, 12,				
					14, 15,				
					16				
		1	2, 6	L	51, 52,				
					54, 55,				
					56				
		1	3, 7	L	02, 06				
		1	3, 7	L	12, 15,				
					16				
11									SUPPORT, Jack
	5122 662AA	1	2, 6	L	01, 02,				
					06				
		1	2, 6	L	11, 12,				
					14, 15,				
					16				
		1	2, 6	L	51, 52,				
					54, 55,				
					56				
		1	3, 7	L	02, 06				
		1	3, 7	L	12, 15,				
					16				
12									PLUG, Seat Mounting
	5103 817AA	2	2, 6	L	01, 02,				
					06				

Refer to Model Legend Information Bookmark

Floor Lining, Entry Paneling & Footrest
Figure IVA-315

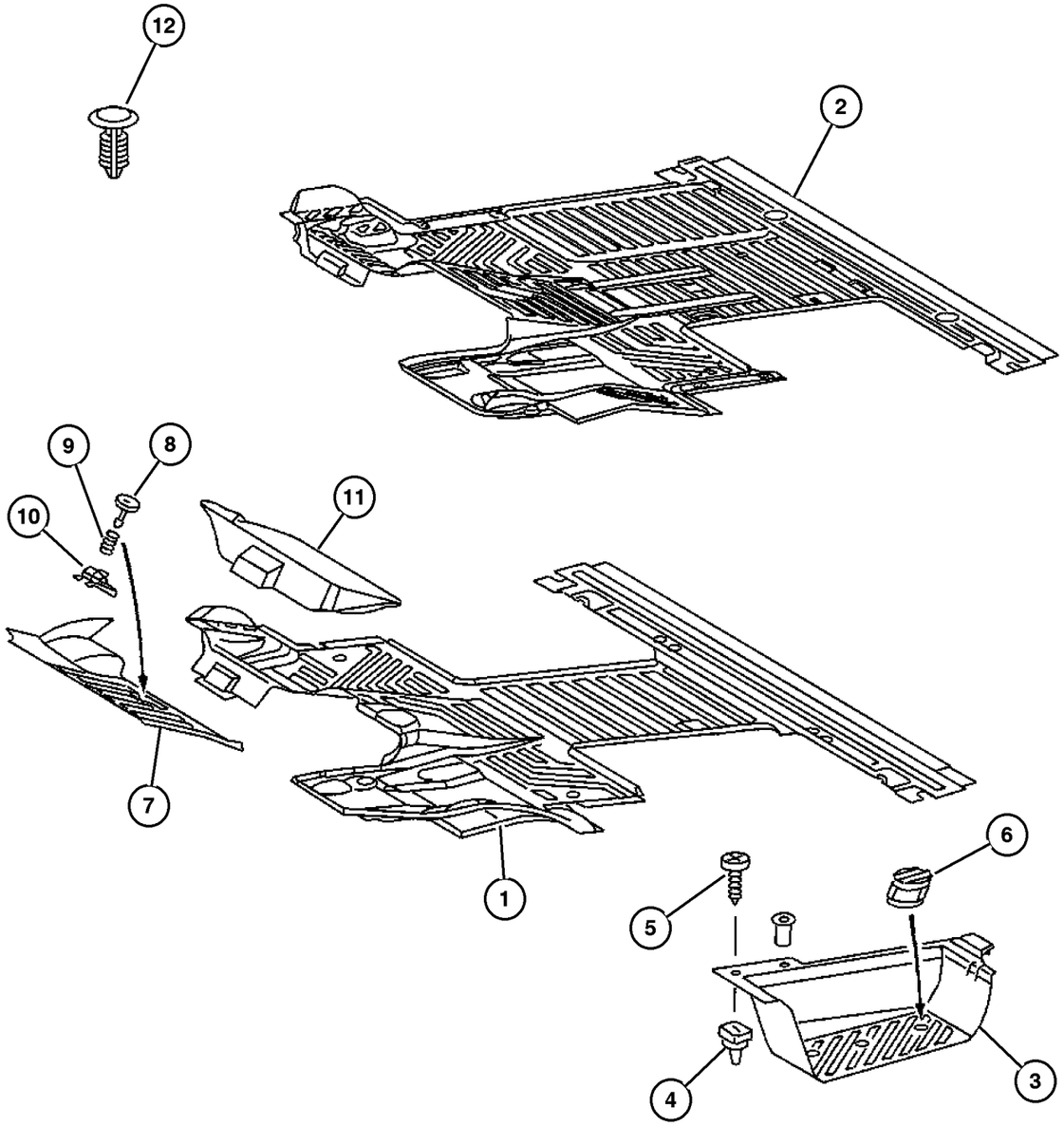

ITEM	PART NUMBER	QTY	LINE	SERIES	BODY	ENGINE	TRANS	TRIM	DESCRIPTION
		2	2, 6	L	11, 12, 14, 15, 16				
		2	2, 6	L	51, 52, 54, 55, 56				
		2	3, 7	L	02, 06				
		2	3, 7	L	12, 15, 16				
-13									SEAL, Paneling to Entry Front
	5125 906AA-	4	2, 6	L	01, 02, 06				
		4	2, 6	L	11, 12, 14, 15, 16				
		4	2, 6	L	51, 52, 54, 55, 56				
		4	3, 7	L	02, 06				
		4	3, 7	L	12, 15, 16				

Refer to Model Legend Information Bookmark

AR = Use as required - = Non illustrated part # = New this model year

March 3, 2006

« RETURN TO GROUP INDEX

Floor - Rubber
Figure IVA-320

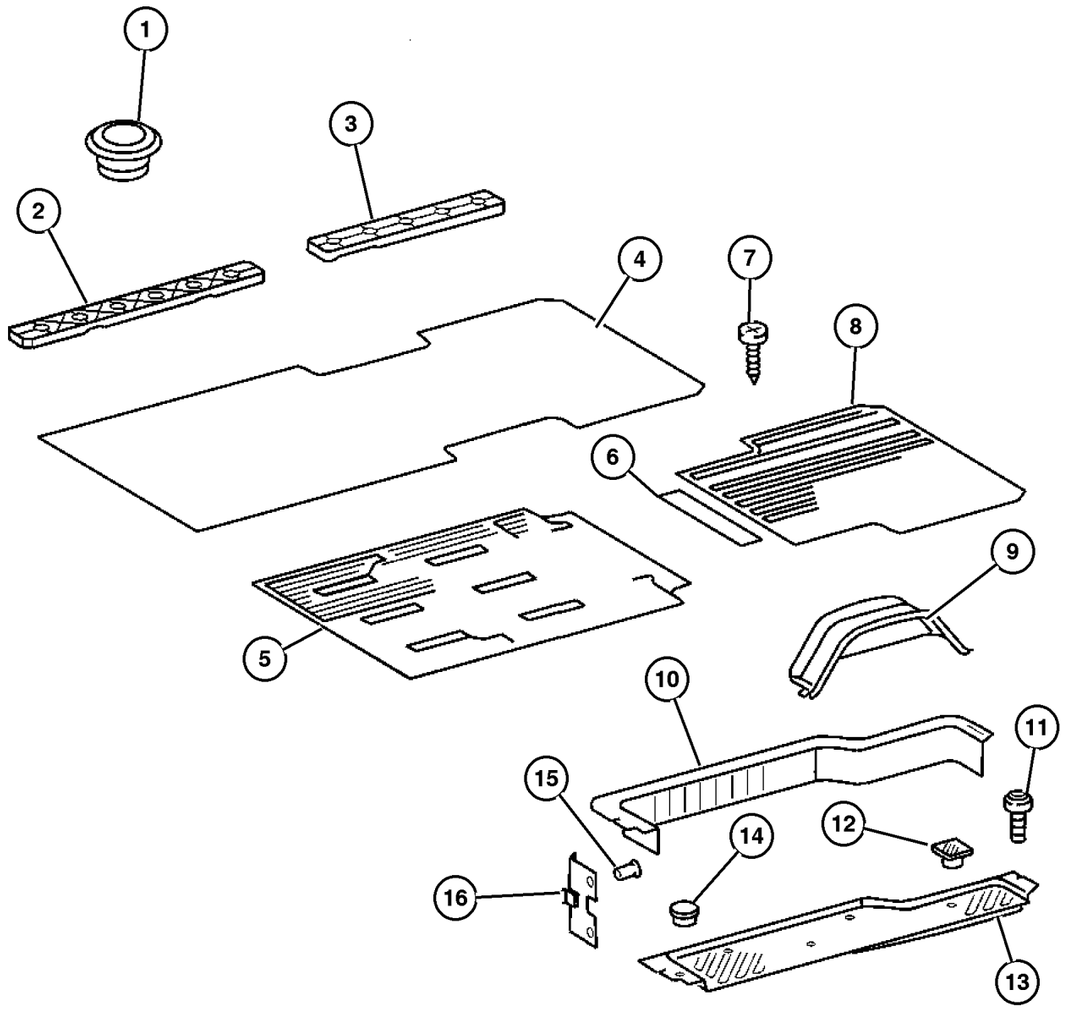

ITEM	PART NUMBER	QTY	LINE	SERIES	BODY	ENGINE	TRANS	TRIM	DESCRIPTION
1									PLUG
	5125 991AA	2	2, 6	L	11, 12, 14, 15, 16				
		99	2, 6	L	51, 52, 54, 55, 56				
		2	3, 7	L	12, 15, 16				
2									COVER, Seat Track
	5122 650AA	2	2, 6	L	11, 12, 14, 15, 16				Front
		1	2, 6	L	51, 52, 54, 55, 56				Front
		3	3, 7	L	12, 15, 16				Front
3									COVER, Seat Track
	5122 642AA	99	2, 6	L	11, 12, 14, 15, 16				Rear
		1	2, 6	L	51, 52, 54, 55, 56				Rear
		1	3, 7	L	12, 15, 16				Rear
4									MAT, Floor
	5131 455AA	1	2, 6	L	11, 14				
		1	2, 6	L	51, 54				
5									MAT, Front Floor, Rubber
	5122 564AA	1	3, 7	L	12, 15				140 Inch Wheelbase
	5122 572AA	1	3, 7	L	16				158 Inch Wheelbase
	5131 462AA	1	2, 6	L	12, 15				140 Inch Wheelbase
		1	2, 6	L	52, 55				140 Inch Wheelbase
	5131 469AA	1	2, 6	L	11, 14, 16				158 Inch Wheelbase
		1	2, 6	L	51, 54, 56				158 Inch Wheelbase
6									PLATE
	5122 835AA	1	2, 6	L	11, 12, 14, 15, 16				With Load Compartment Sliding Door, Right

Refer to Model Legend Information Bookmark

Floor - Rubber
Figure IVA-320

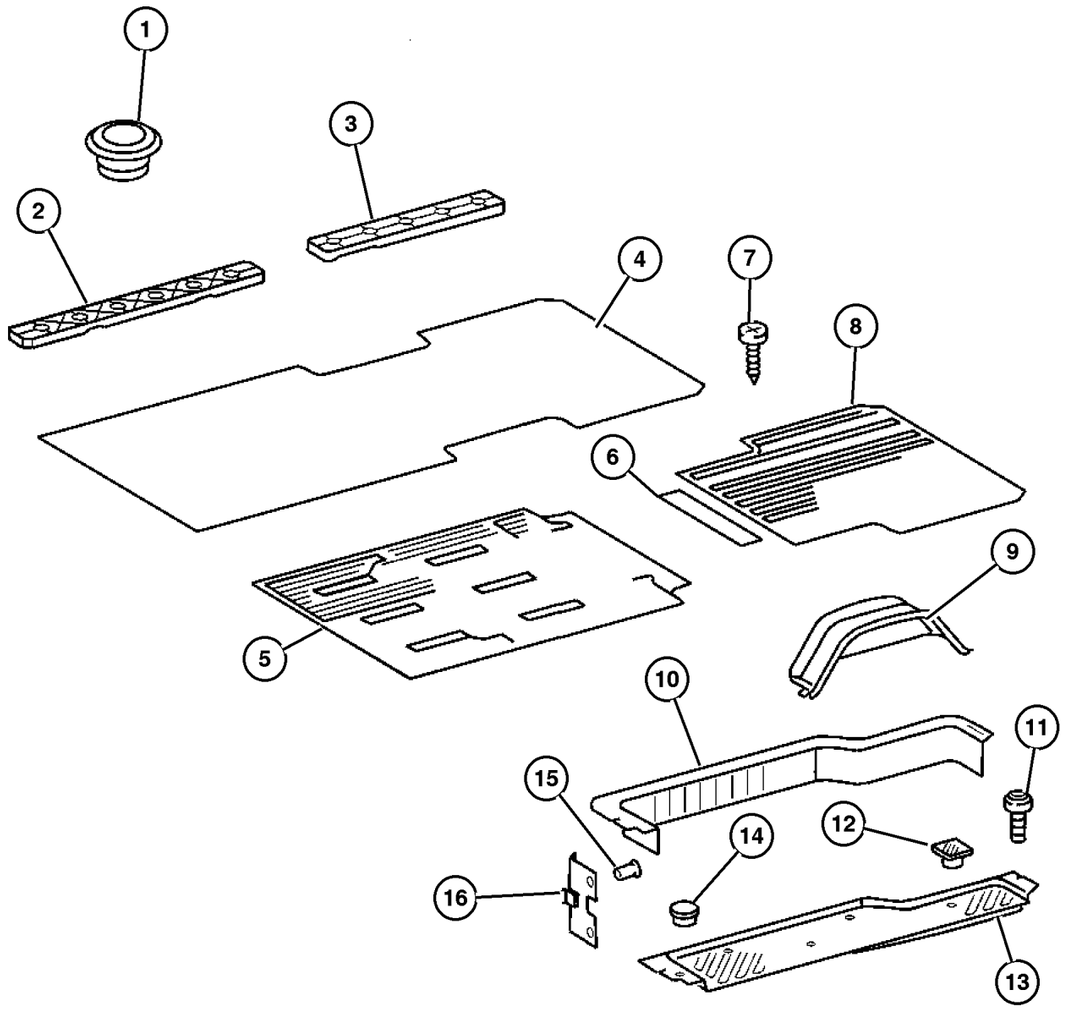

ITEM	PART NUMBER	QTY	LINE	SERIES	BODY	ENGINE	TRANS	TRIM	DESCRIPTION
		1	2, 6	L	51, 52, 54, 55, 56				With Load Compartment Sliding Door, Right
		1	3, 7	L	12, 15, 16				With Load Compartment Sliding Door, Right
	5122 837AA	1	2, 6	L	11, 12, 14, 15, 16				With Load Compartment Sliding Door, Left
		1	2, 6	L	51, 52, 54, 55, 56				With Load Compartment Sliding Door, Left
		1	3, 7	L	12, 15, 16				With Load Compartment Sliding Door, Left
	5122 840AA	1	2, 6	L	11, 12, 14, 15, 16				With Load Compartment Sliding Door, Left and Right
		1	2, 6	L	51, 52, 54, 55, 56				With Load Compartment Sliding Door, Left and Right
		1	3, 7	L	12, 15, 16				With Load Compartment Sliding Door, Left and Right
	5122 842AA	1	2, 6	L	11, 12, 14, 15, 16				Without Load Compartment Sliding Door
		1	2, 6	L	51, 52, 54, 55, 56				Without Load Compartment Sliding Door
		1	3, 7	L	12, 15, 16				Without Load Compartment Sliding Door
7									RIVET, RIVET
	5133 555AA	7	2, 6	L	11, 12, 14, 15, 16				
		7	2, 6	L	51, 52, 54, 55, 56				
		6	3, 7	L	12, 15, 16				
8									MAT, Floor
	5122 580AA	1	3, 7	L	12, 15				140 Inch Wheelhouse, Rear
	5122 581AA	1	3, 7	L	16				158 Inch Wheelhouse, Rear
	5131 477AA	1	2, 6	L	16				158 Inch Wheelhouse, Rear
		1	2, 6	L	56				158 Inch Wheelhouse, Rear
	5131 478AA	1	2, 6	L	12, 15				140 Inch Wheelhouse, Rear
		1	2, 6	L	52, 55				140 Inch Wheelhouse, Rear
9									MAT, Wheelhouse

Refer to Model Legend Information Bookmark

Floor - Rubber
Figure IVA-320

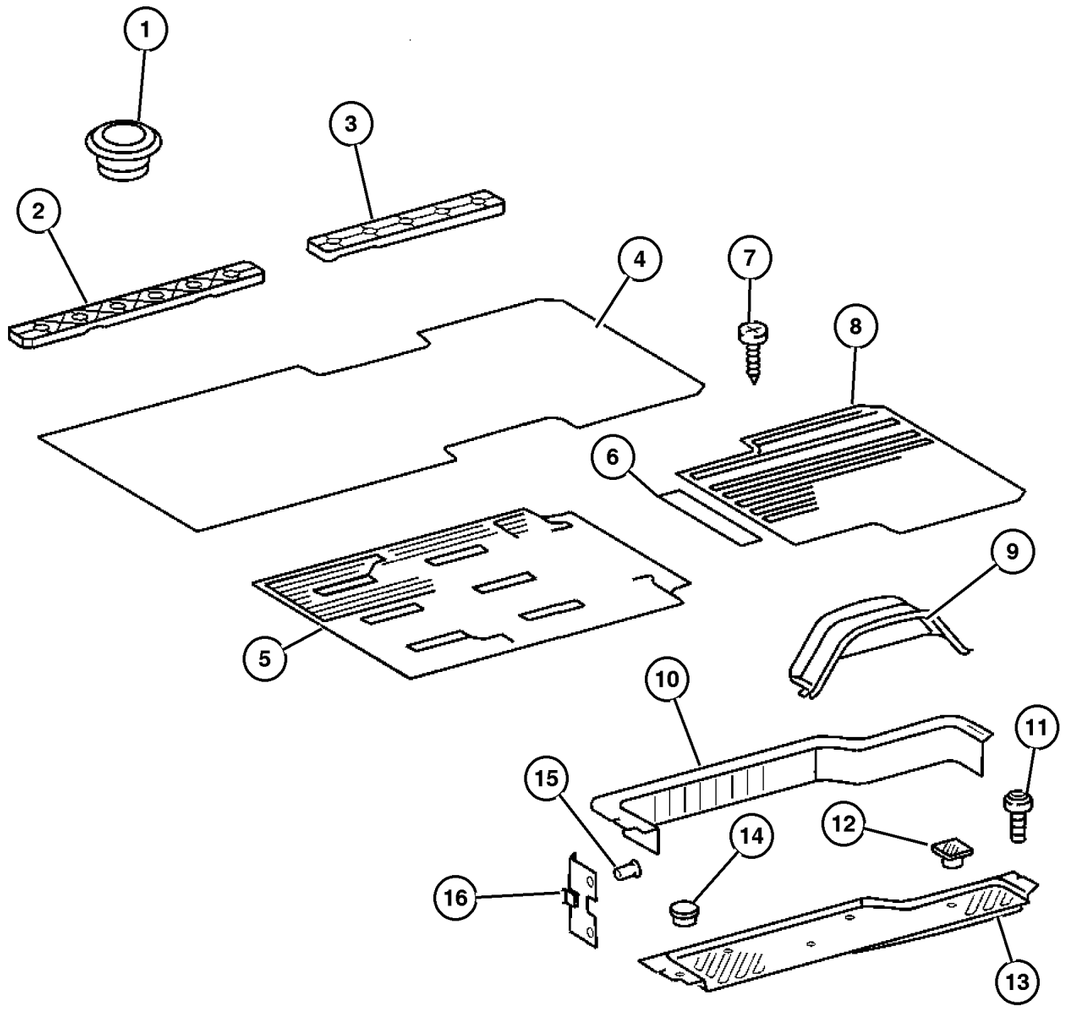

ITEM	PART NUMBER	QTY	LINE	SERIES	BODY	ENGINE	TRANS	TRIM	DESCRIPTION
	5122 563AA	2	3, 7	L	12, 15, 16				3500 GVW
	5131 453AA	2	2, 6	L	11, 12, 14, 15, 16				2500 GVW
		2	2, 6	L	51, 52, 54, 55, 56				2500 GVW
10									PANEL, Sliding Door Trim
	5122 825AA	1	2, 6	L	11, 12, 14, 15, 16				Sliding Door Left
		1	2, 6	L	51, 52, 54, 55, 56				Sliding Door Left
		1	3, 7	L	12, 15, 16				Sliding Door Left
	5122 827AA	1	2, 6	L	11, 12, 14, 15, 16				Sliding Door Right
		1	2, 6	L	51, 52, 54, 55, 56				Sliding Door Right
		1	3, 7	L	12, 15, 16				Sliding Door Right
	5122 830AA	1	2, 6	L	11, 12, 14, 15, 16				Sliding Door Left With Entrance Light
		1	2, 6	L	51, 52, 54, 55, 56				Sliding Door Left With Entrance Light
		1	3, 7	L	12, 15, 16				Sliding Door Left With Entrance Light
	5122 832AA	1	2, 6	L	11, 12, 14, 15, 16				Sliding Door Right With Entrance Light
		1	2, 6	L	51, 52, 54, 55, 56				Sliding Door Right With Entrance Light
		1	3, 7	L	12, 15, 16				Sliding Door Right With Entrance Light
11									SCREW
	6104 142AA	2	2, 6	L	01, 02, 06				

Refer to Model Legend Information Bookmark

AR = Use as required - = Non illustrated part # = New this model year

March 3, 2006

« RETURN TO GROUP INDEX

Floor - Rubber
Figure IVA-320

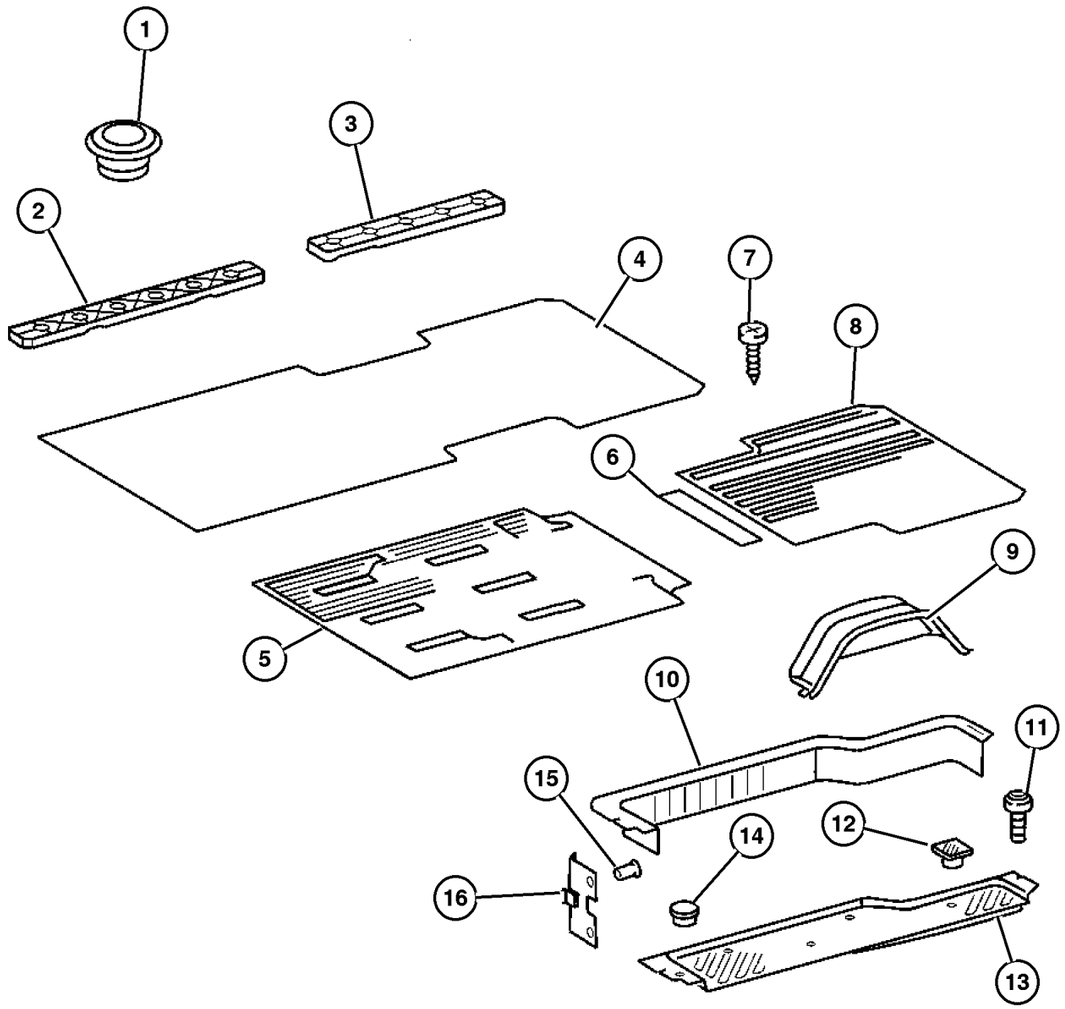

ITEM	PART NUMBER	QTY	LINE	SERIES	BODY	ENGINE	TRANS	TRIM	DESCRIPTION
		2	2, 6	L	11, 12, 14, 15, 16				
		2	2, 6	L	51, 52, 54, 55, 56				
		2	3, 7	L	02, 06				
		2	3, 7	L	12, 15, 16				
12									PLUG
	5122 811AA	4	2, 6	L	11, 12, 14, 15, 16				
		4	2, 6	L	51, 52, 54, 55, 56				
		4	3, 7	L	12, 15, 16				
13									PAD, Side Cargo Door Sill
	5122 815AA	1	2, 6	L	11, 12, 14, 15, 16				Entrance Sliding Door, Left
		1	2, 6	L	51, 52, 54, 55, 56				Entrance Sliding Door, Left
		1	3, 7	L	12, 15, 16				Entrance Sliding Door, Left
	5122 816AA	1	2, 6	L	11, 12, 14, 15, 16				Entrance Sliding Door, Right
		1	2, 6	L	51, 52, 54, 55, 56				Entrance Sliding Door, Right
		1	3, 7	L	12, 15, 16				Entrance Sliding Door, Right
14									PLUG
	5122 808AA	1	2, 6	L	11, 12, 14, 15, 16				
		1	2, 6	L	51, 52, 54, 55, 56				
		1	3, 7	L	12, 15, 16				
15									RIVET

Refer to Model Legend Information Bookmark

AR = Use as required - = Non illustrated part # = New this model year

March 3, 2006

« RETURN TO GROUP INDEX

« »

Floor - Rubber
Figure IVA-320

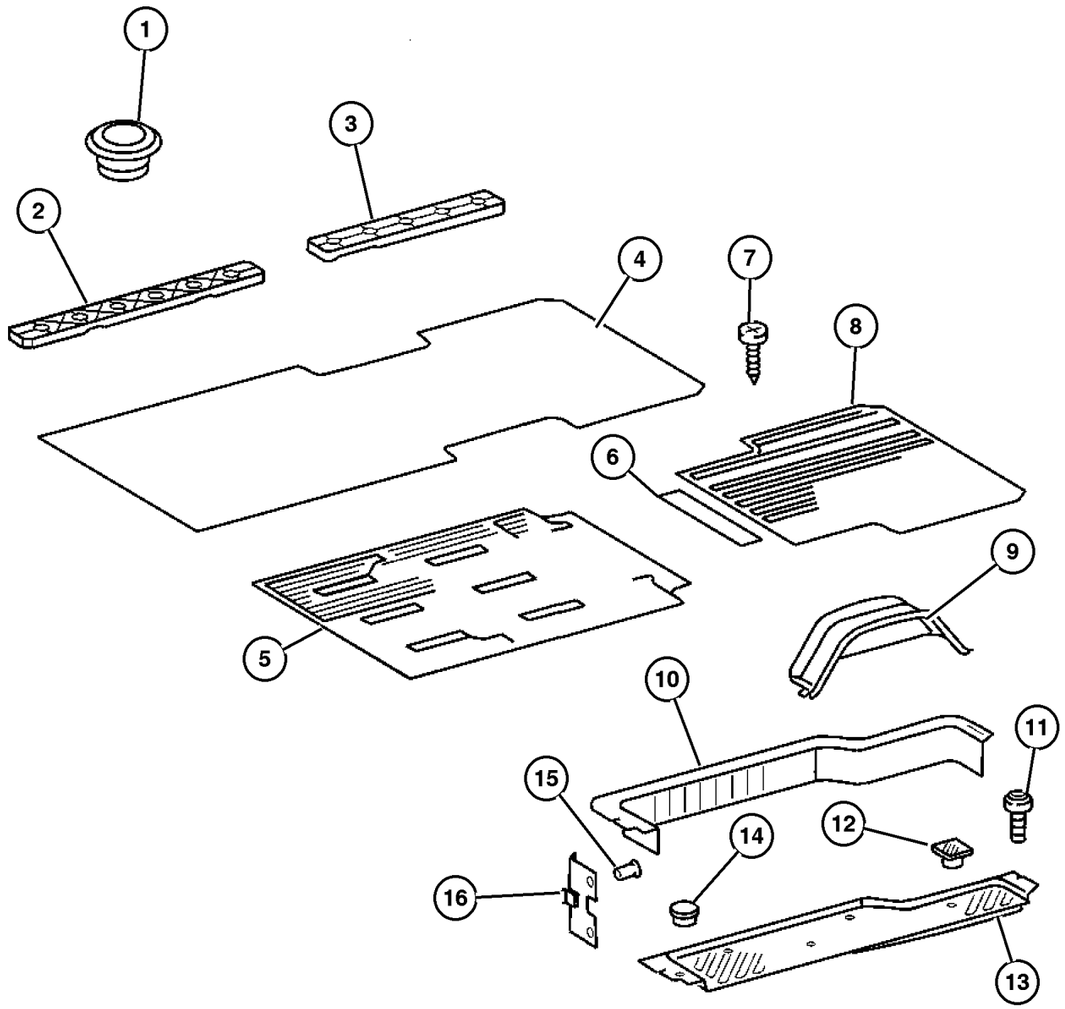

ITEM	PART NUMBER	QTY	LINE	SERIES	BODY	ENGINE	TRANS	TRIM	DESCRIPTION
	5134 061AA	8	2, 6	L	11, 12, 14, 15, 16				
		8	2, 6	L	51, 52, 54, 55, 56				
		8	3, 7	L	12, 15, 16				
16									CLIP, Floor Trim
	5125 584AA	4	2, 6	L	11, 12, 14, 15, 16				
		4	2, 6	L	51, 52, 54, 55, 56				
		4	3, 7	L	12, 15, 16				

Refer to Model Legend Information Bookmark

AR = Use as required - = Non illustrated part # = New this model year

March 3, 2006

« RETURN TO GROUP INDEX

«

Floor - Wooden
Figure IVA-330

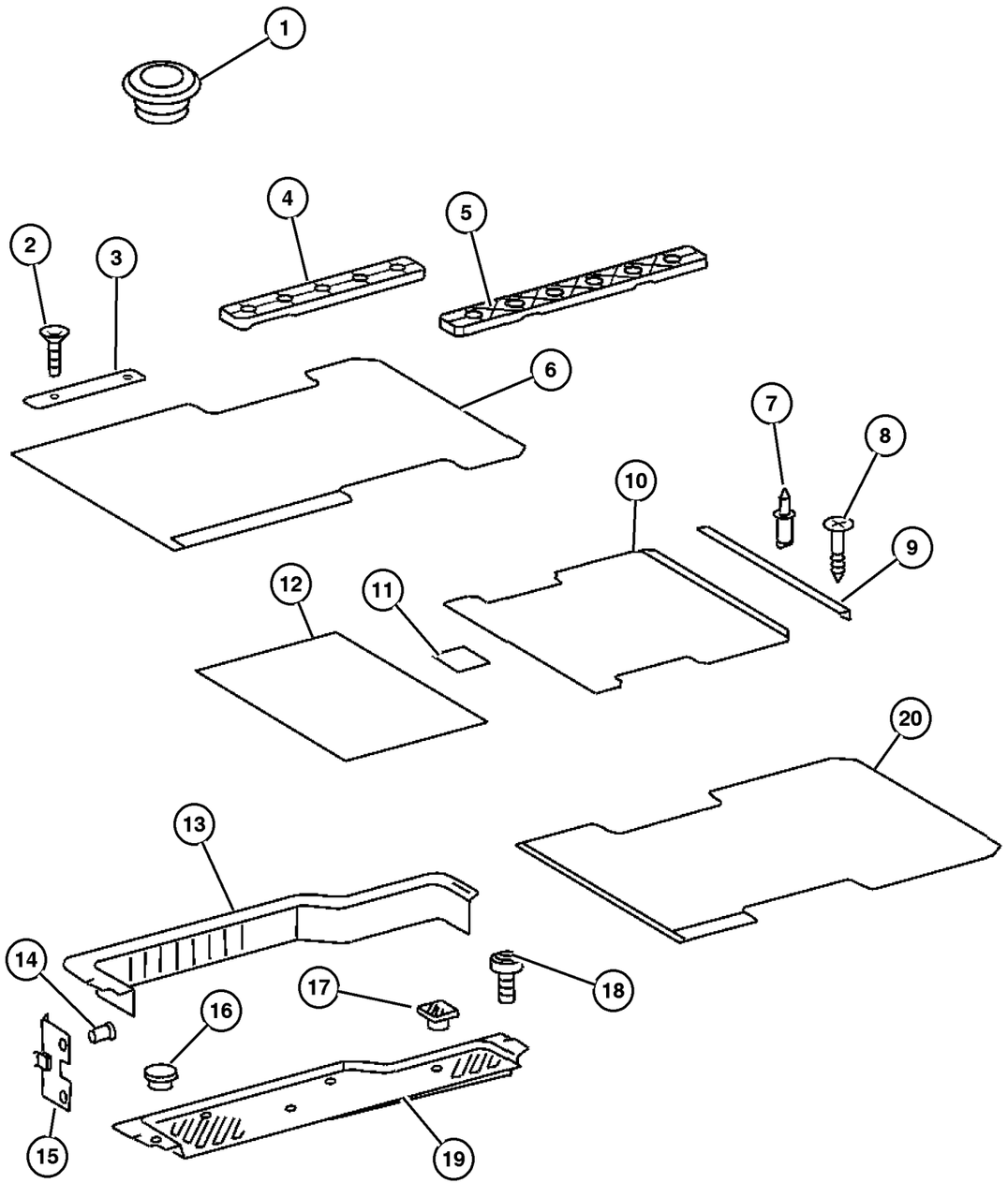

ITEM	PART NUMBER	QTY	LINE	SERIES	BODY	ENGINE	TRANS	TRIM	DESCRIPTION
1									PLUG
	5125 991AA	2	2, 6	L	11, 12, 14, 15, 16				
		99	2, 6	L	51, 52, 54, 55, 56				
		2	3, 7	L	12, 15, 16				
2									SCREW, (NOT SERVICED) (Not Serviced)
3									PLATE, (NOT SERVICED) (Not Serviced)
4									COVER, Seat Track Rear
	5122 642AA	99	2, 6	L	11, 12, 14, 15, 16				
		1	2, 6	L	51, 52, 54, 55, 56				Rear
		1	3, 7	L	12, 15, 16				Rear
5									COVER, Seat Track Front
	5122 650AA	2	2, 6	L	11, 12, 14, 15, 16				
		1	2, 6	L	51, 52, 54, 55, 56				Front
		3	3, 7	L	12, 15, 16				Front
6									FLOOR, Wooden
	5122 778AA	1	2, 6	L	12, 15				With Front Seats, 140 & 158 Inch Wheelbase
		1	2, 6	L	52, 55				With Front Seats, 140 & 158 Inch Wheelbase
		1	3, 7	L	16				With Front Seats, 140 & 158 Inch Wheelbase
	5131 631AA	1	2, 6	L	11, 14				With 118 Inch Wheelbase, Cargo, No Seats
	5131 663AA	1	2, 6	L	11, 14				With 118 Inch Wheelbase, Passenger Van With Seats
		1	2, 6	L	51, 54				With 118 Inch Wheelbase, Passenger Van With Seats
7									RIVET

Refer to Model Legend Information Bookmark

AR = Use as required - = Non illustrated part # = New this model year

March 3, 2006

« RETURN TO GROUP INDEX »

Floor - Wooden
Figure IVA-330

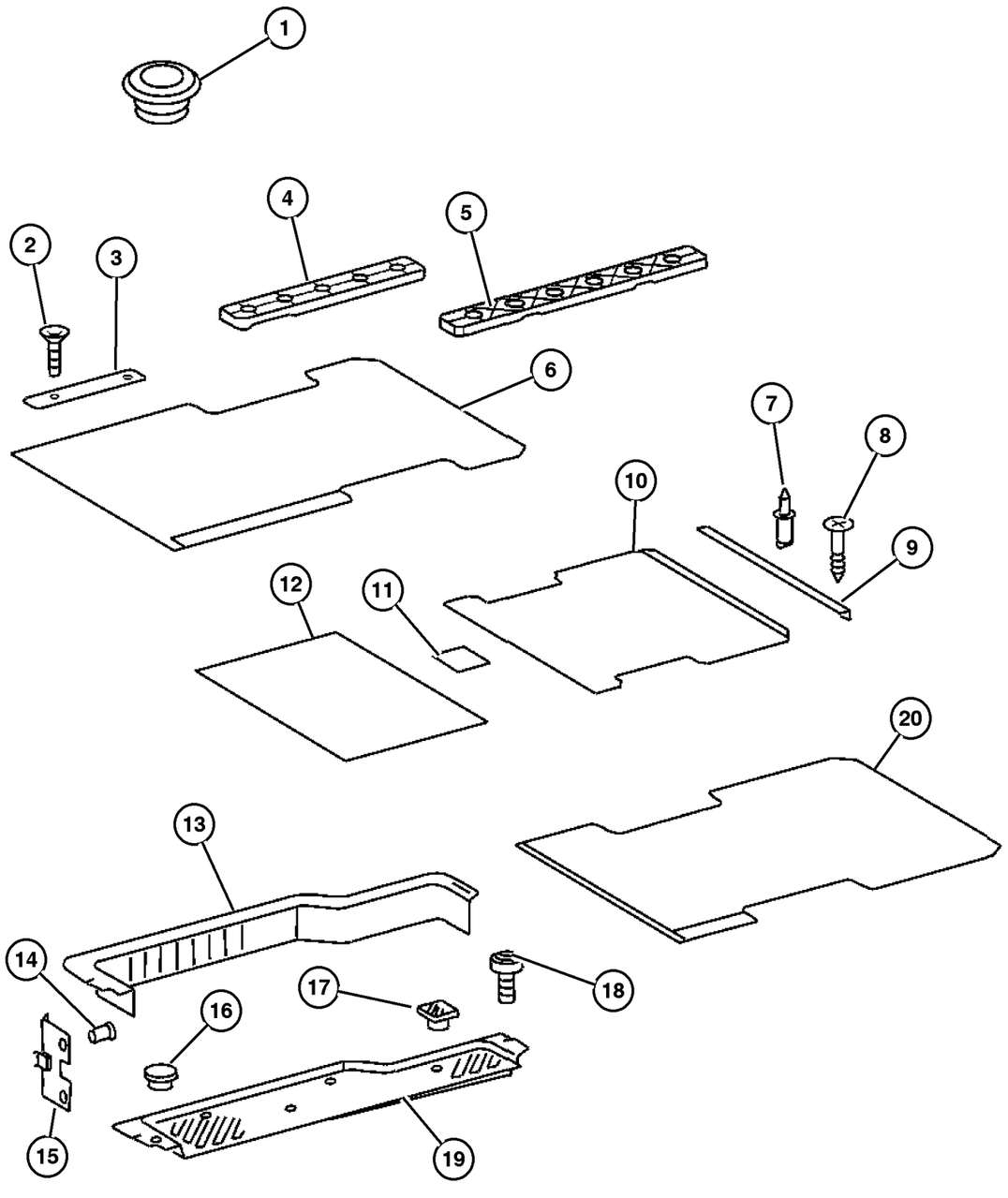

ITEM	PART NUMBER	QTY	LINE	SERIES	BODY	ENGINE	TRANS	TRIM	DESCRIPTION
	6104 871AA	14	2, 6	L	16				
		16	2, 6	L	12, 15				
		14	2, 6	L	52, 55				
		4	3, 7	L	12, 15, 16				
8	5134 062AA	9	3, 7	L	12, 15, 16				SCREW
9									MOLDING, Cargo Area Carpet
	5122 669AA	1	2, 6	L	11, 12, 14, 15, 16				
		1	2, 6	L	51, 52, 54, 55, 56				
		1	3, 7	L	12, 15, 16				
10									FLOOR, Wooden
	5122 802AA	1	2, 6	L	12, 15				With Seats, 140 Inch Wheelbase, Rear
		1	2, 6	L	52, 55				With Seats, 140 Inch Wheelbase, Rear
	5122 804AA	1	2, 6	L	11, 14, 16				With Seats, 158 Inch Wheelbase, Rear
		1	2, 6	L	51, 54, 56				With Seats, 158 Inch Wheelbase, Rear
	5127 784AA	1	2, 6	L	11, 14, 16				Without Seats, 158 Inch Wheelbase, Rear
		1	3, 7	L	16				Without Seats, 158 Inch Wheelbase, Rear
	5127 806AA	1	2, 6	L	12, 15				Without Seats, 140 Inch Wheelbase, Rear
		1	3, 7	L	12, 15				Without Seats, 140 Inch Wheelbase, Rear
11									MOLDING, Cargo Area Carpet
	5122 671AA	5	2, 6	L	12, 15				
		5	2, 6	L	52, 55				
		5	3, 7	L	12, 15				
12									FLOOR, Wooden
	5122 730AA	1	2, 6	L	12, 15				Without Seats 8mm Thick, 140 & 158 Inch Wheelbase
		1	3, 7	L	16				Without Seats 8mm Thick, 140 & 158 Inch Wheelbase
	5122 778AA	1	2, 6	L	12, 15				With Seats 140 & 158 Inch Wheelbase
		1	2, 6	L	52, 55				With Seats 140 & 158 Inch Wheelbase

Refer to Model Legend Information Bookmark

AR = Use as required - = Non illustrated part # = New this model year

March 3, 2006

« RETURN TO GROUP INDEX

Floor - Wooden
Figure IVA-330

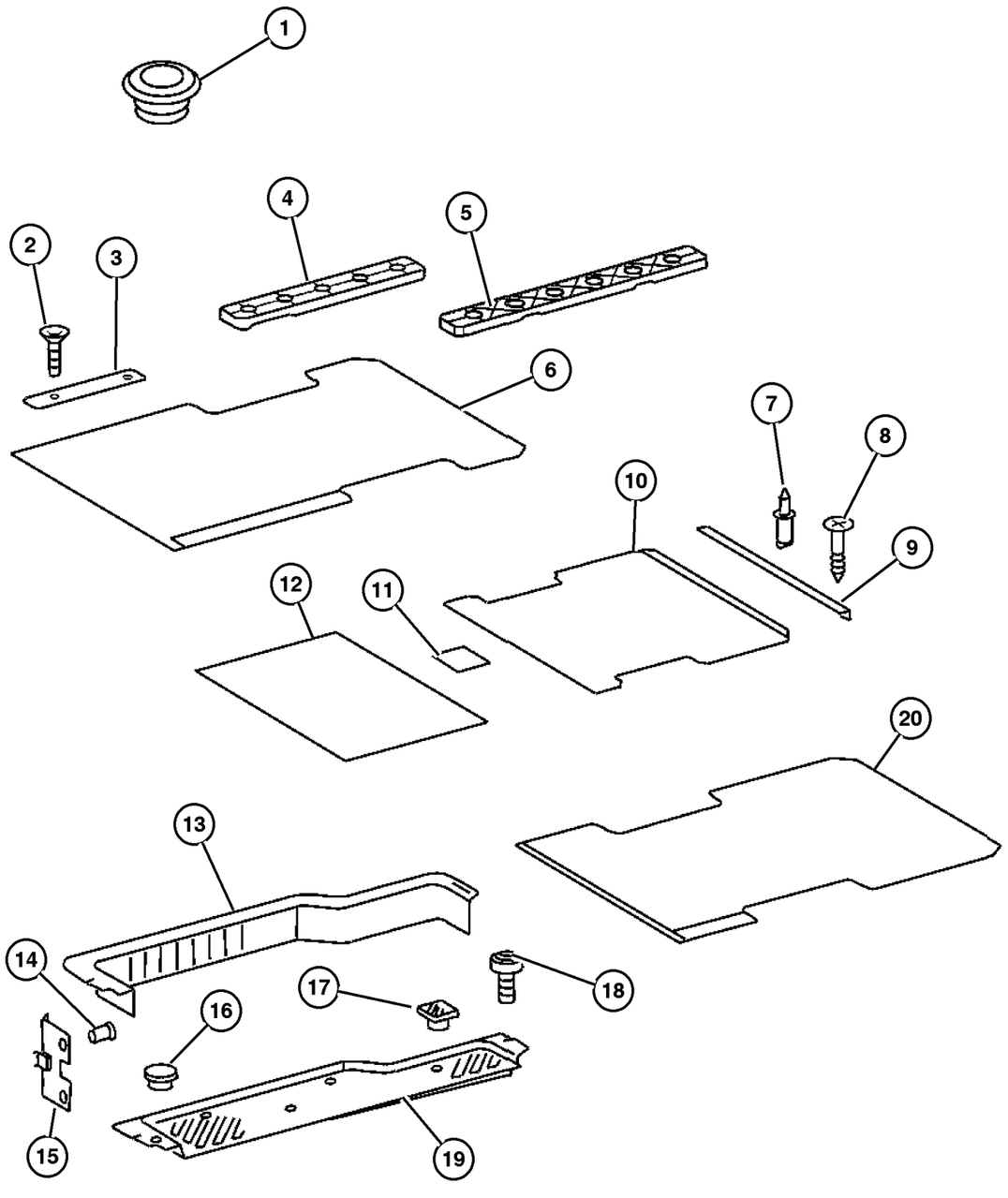

ITEM	PART NUMBER	QTY	LINE	SERIES	BODY	ENGINE	TRANS	TRIM	DESCRIPTION
		1	3, 7	L	16				With Seats 140 & 158 Inch Wheelbase
	5131 631AA	1	2, 6	L	11, 14				No seat-Cargo-118 Inch Wheelbase
13									PANEL, Sliding Door Trim
	5122 827AA	1	2, 6	L	11, 12, 14, 15, 16				
		1	2, 6	L	51, 52, 54, 55, 56				
		1	3, 7	L	12, 15, 16				
14									RIVET
	5134 061AA	8	2, 6	L	11, 12, 14, 15, 16				
		8	2, 6	L	51, 52, 54, 55, 56				
		8	3, 7	L	12, 15, 16				
15									CLIP, Floor Trim
	5125 584AA	4	2, 6	L	11, 12, 14, 15, 16				
		4	2, 6	L	51, 52, 54, 55, 56				
		4	3, 7	L	12, 15, 16				
16									PLUG
	5122 808AA	1	2, 6	L	11, 12, 14, 15, 16				
		1	2, 6	L	51, 52, 54, 55, 56				
		1	3, 7	L	12, 15, 16				
17									PLUG
	5122 811AA	4	2, 6	L	11, 12, 14, 15, 16				

Refer to Model Legend Information Bookmark

Floor - Wooden
Figure IVA-330

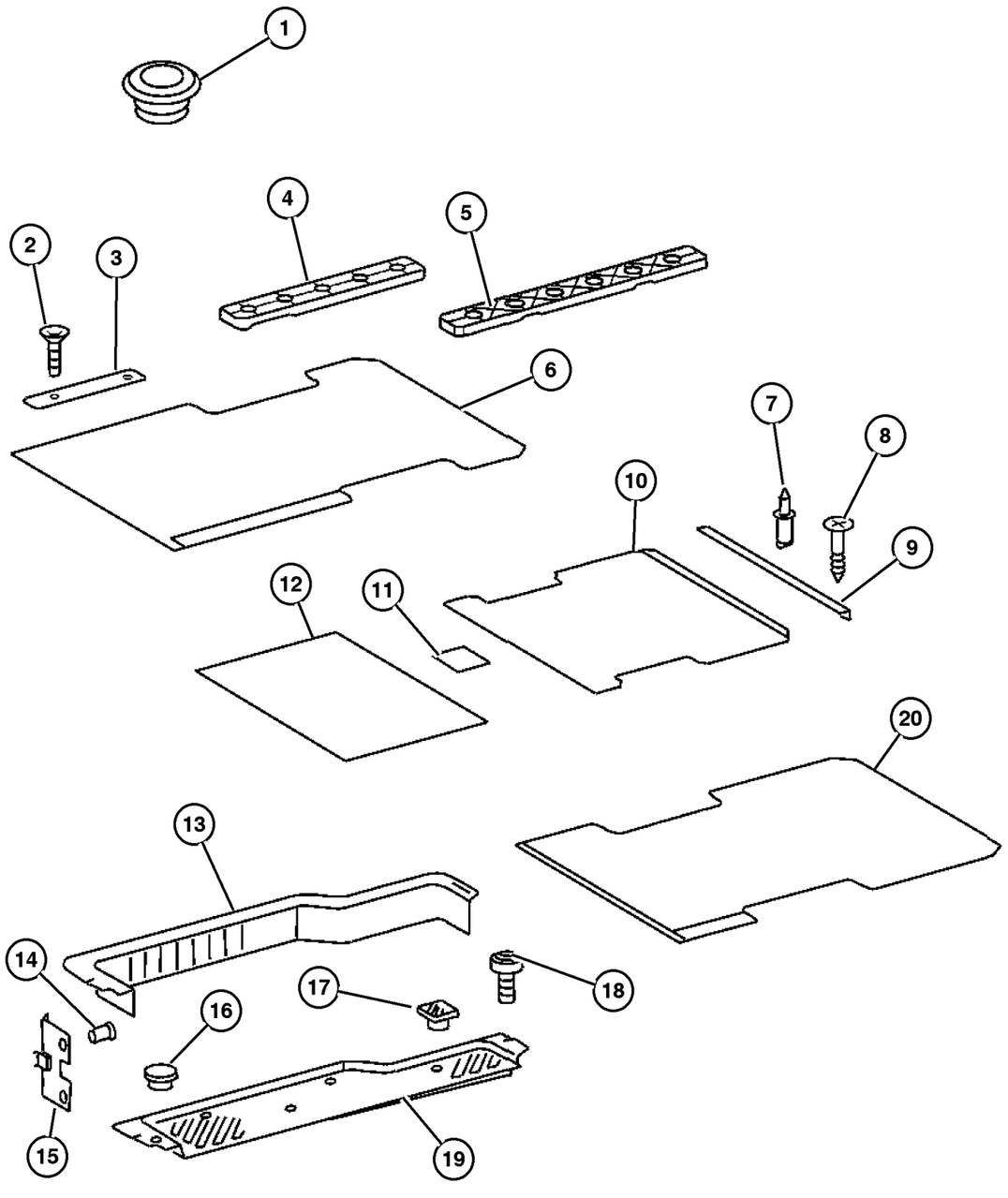

ITEM	PART NUMBER	QTY	LINE	SERIES	BODY	ENGINE	TRANS	TRIM	DESCRIPTION
		4	2, 6	L	51, 52, 54, 55, 56				
		4	3, 7	L	12, 15, 16				
18									SCREW
	6104 142AA	2	2, 6	L	01, 02, 06				
		2	2, 6	L	11, 12, 14, 15, 16				
		2	2, 6	L	51, 52, 54, 55, 56				
		2	3, 7	L	02, 06				
		2	3, 7	L	12, 15, 16				
19									PAD, Side Cargo Door Sill
	5122 815AA	1	2, 6	L	11, 12, 14, 15, 16				Entrance Sliding Door, Left
		1	2, 6	L	51, 52, 54, 55, 56				Entrance Sliding Door, Left
		1	3, 7	L	12, 15, 16				Entrance Sliding Door, Left
	5122 816AA	1	2, 6	L	11, 12, 14, 15, 16				Entrance Sliding Door, Right
		1	2, 6	L	51, 52, 54, 55, 56				Entrance Sliding Door, Right
		1	3, 7	L	12, 15, 16				Entrance Sliding Door, Right
20									FLOOR, Wooden
	5122 804AA	1	2, 6	L	11, 14, 16				With seats- 158 Inch Wheelbase
		1	2, 6	L	51, 54, 56				With seats- 158 Inch Wheelbase
	5127 784AA	1	2, 6	L	11, 14, 16				Without seats- 158 Inch Wheelbase
		1	3, 7	L	16				Without seats- 158 Inch Wheelbase
-21									MOLDING, Cargo Area Carpet

Refer to Model Legend Information Bookmark

Floor - Wooden
Figure IVA-330

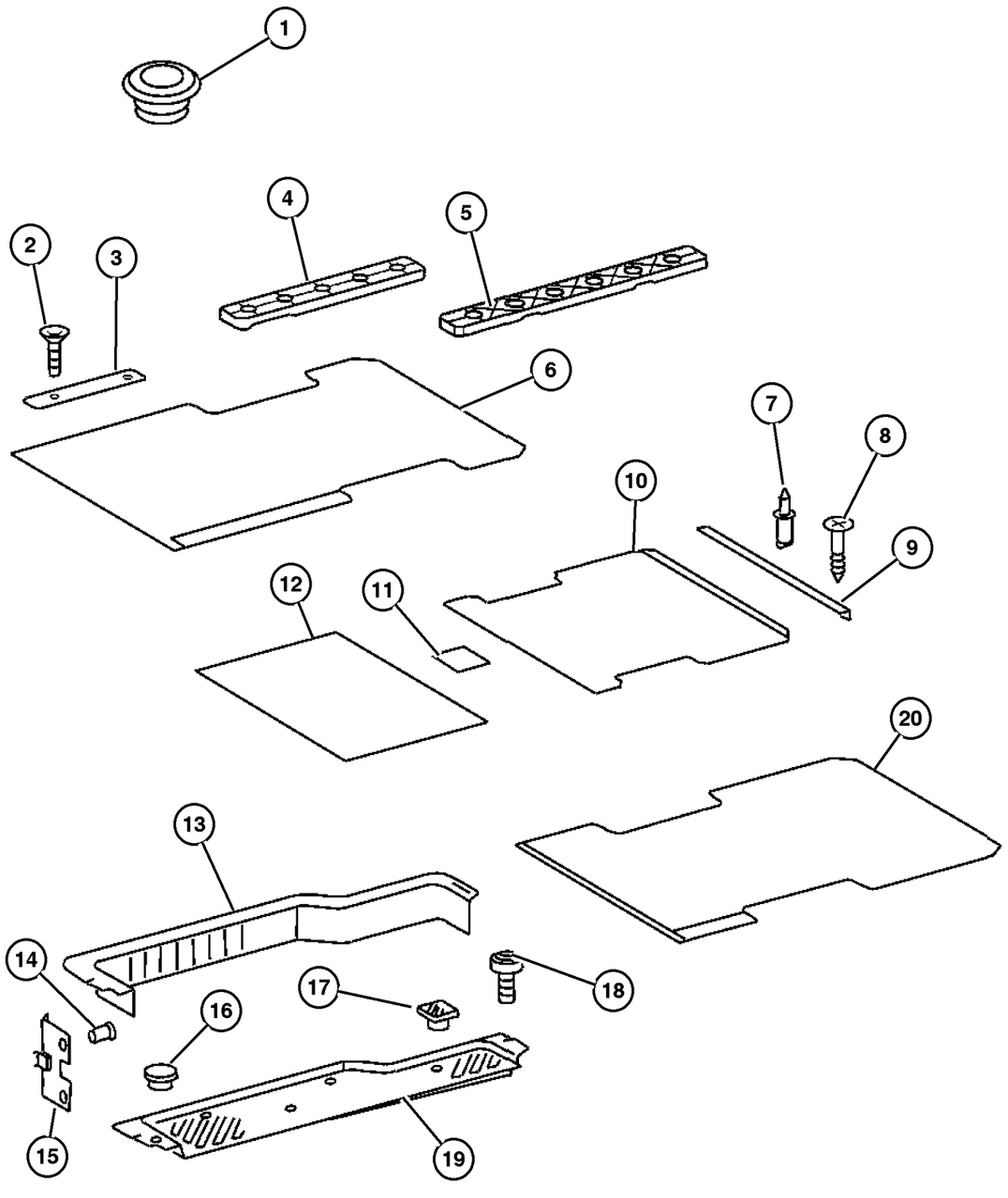

ITEM	PART NUMBER	QTY	LINE	SERIES	BODY	ENGINE	TRANS	TRIM	DESCRIPTION
	5121 438AA-	1	2, 6	L	11, 12, 14, 15, 16				Threshold For Partition Door
		1	3, 7	L	12, 15, 16				Threshold For Partition Door
-22									MOLDING, Cargo Area Carpet
	5122 670AA-	2	2, 6	L	11, 12, 14, 15, 16				With Sliding Doors, Right & Left
		2	2, 6	L	51, 52, 54, 55, 56				With Sliding Doors, Right & Left
		2	3, 7	L	12, 15, 16				With Sliding Doors, Right & Left
	5131 522AA-	1	2, 6	L	11, 12, 14, 15, 16				For [UPS]

Refer to Model Legend Information Bookmark

AR = Use as required - = Non illustrated part # = New this model year

March 3, 2006

« RETURN TO GROUP INDEX

Insulation - Carpet
Figure IVA-340

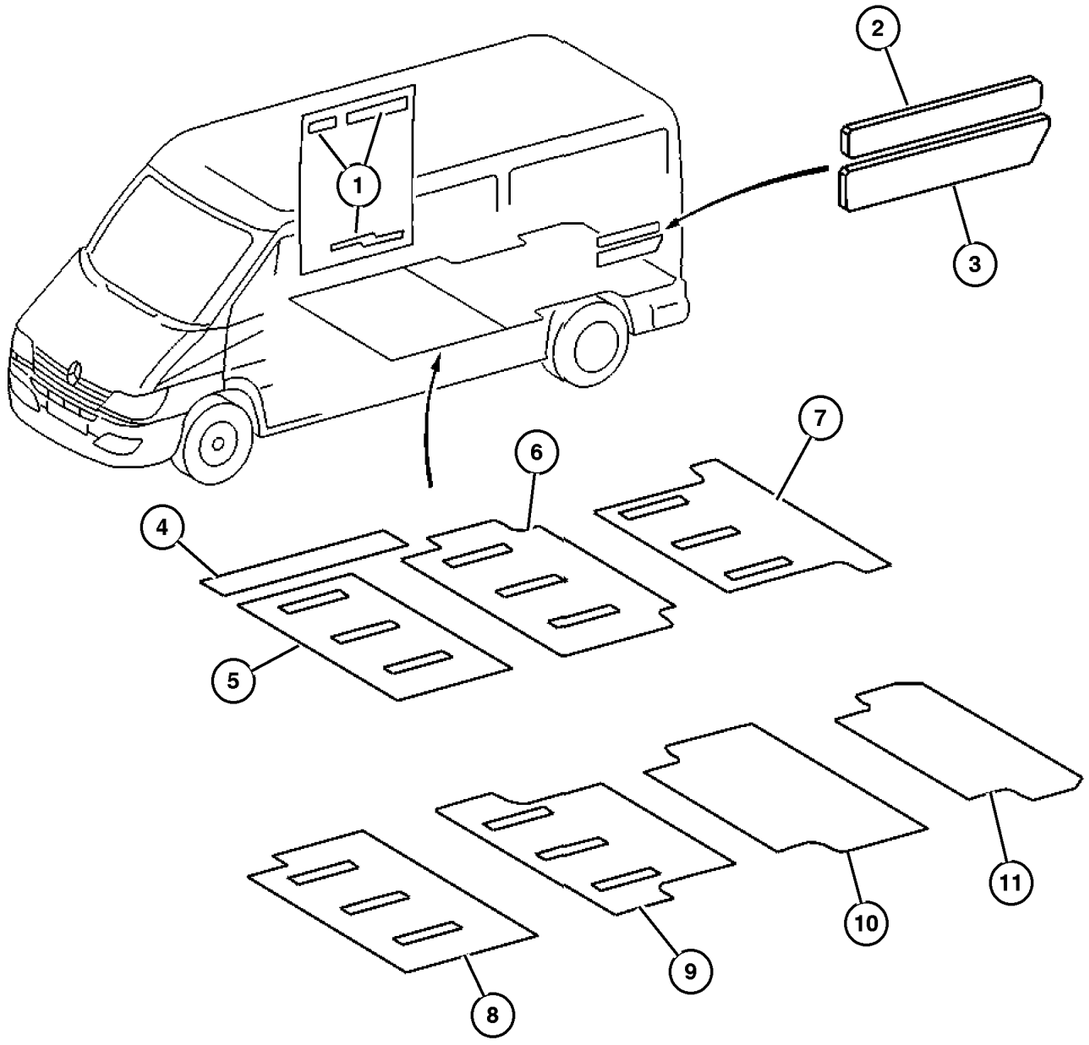

ITEM	PART NUMBER	QTY	LINE	SERIES	BODY	ENGINE	TRANS	TRIM	DESCRIPTION
1									INSULATION, NONE, SPRINTER, (NOT SERVICED) (Not Serviced)
2									INSULATION, Side Panel
	5131 360AA	99	2, 6	L	11, 12, 14, 15, 16				
		99	2, 6	L	51, 52, 54, 55, 56				
		99	3, 7	L	12, 15				
3									INSULATION, Side Panel
	5122 497AA	1	2, 6	L	11, 12, 14, 15, 16				[910x265x20mm]
		1	2, 6	L	51, 52, 54, 55, 56				[910x265x20mm]
		99	3, 7	L	12, 15, 16				[910x265x20mm]
	5122 504AA	1	2, 6	L	11, 14, 16				[910x265x20mm],Left
		1	2, 6	L	12, 15				[910x265x20mm],Left
		1	2, 6	L	51, 54, 56				[910x265x20mm],Left
		1	2, 6	L	52, 55				[910x265x20mm],Left
		1	2, 6	L	56				[910x265x20mm],Left
		1	3, 7	L	16				[910x265x20mm],Left
		1	3, 7	L	12, 15				[910x265x20mm],Left
	5122 507AA	1	2, 6	L	11, 14, 16				[910x265x20mm],Right
		1	2, 6	L	12, 15				[910x265x20mm],Right
		1	2, 6	L	16				[910x265x20mm],Right
		1	2, 6	L	52, 55				[910x265x20mm],Right
		1	2, 6	L	51, 54, 56				[910x265x20mm],Right
		1	3, 7	L	16				[910x265x20mm],Right
		1	3, 7	L	12, 15				[910x265x20mm],Right
4									INSULATION, Floor
	5133 560AA	1	2, 6	L	11, 12, 14, 15, 16				
		1	2, 6	L	51, 52, 54, 55, 56				

Refer to Model Legend Information Bookmark

AR = Use as required - = Non illustrated part # = New this model year

March 3, 2006

« RETURN TO GROUP INDEX »

Insulation - Carpet
Figure IVA-340

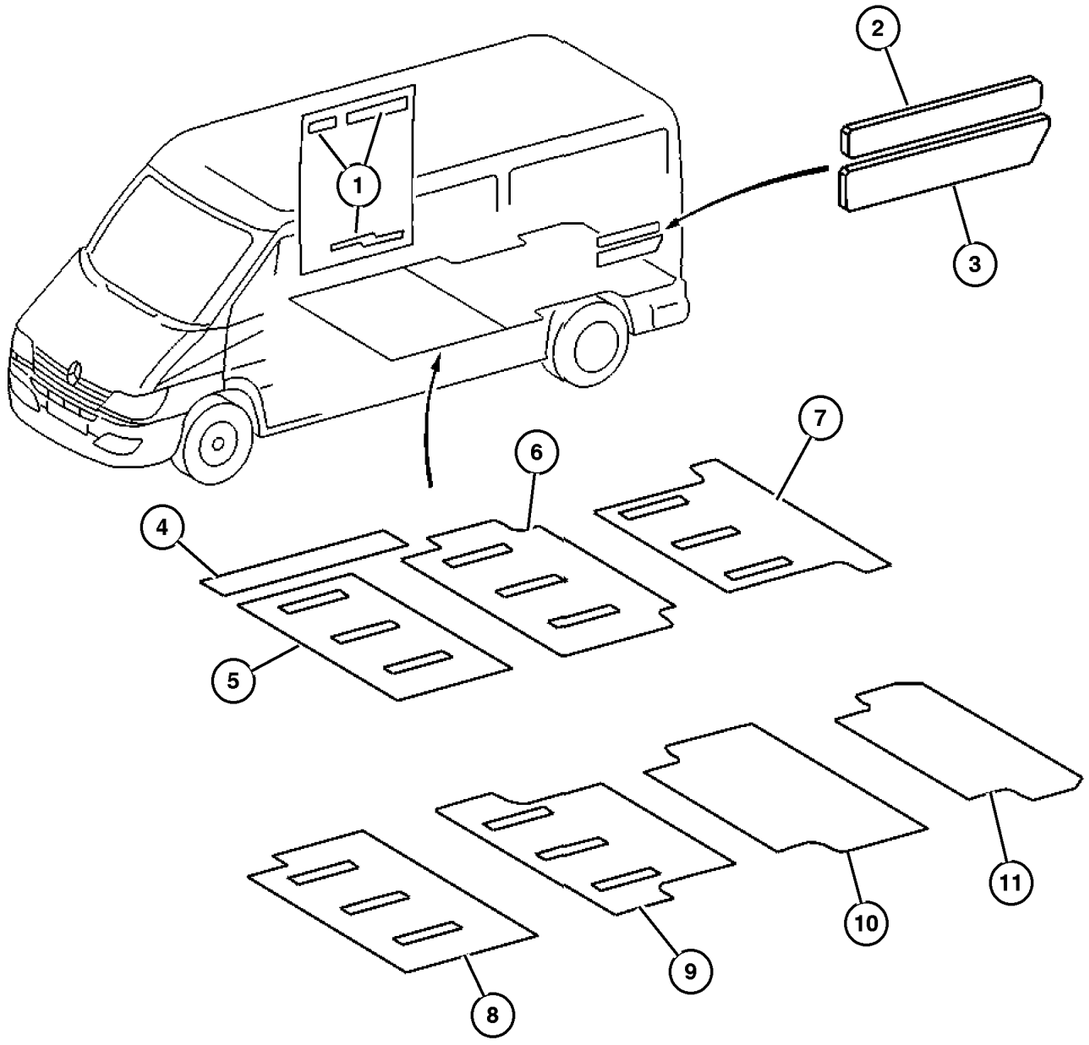

ITEM	PART NUMBER	QTY	LINE	SERIES	BODY	ENGINE	TRANS	TRIM	DESCRIPTION
		1	3, 7	L	12, 15, 16				
5									INSULATION, Floor
	5122 432AA	1	2, 6	L	11, 12, 14, 15, 16				
		1	2, 6	L	51, 52, 54, 55, 56				
		1	3, 7	L	12, 15, 16				
6									INSULATION, Floor
	5122 435AA	1	2, 6	L	12, 15				
		1	2, 6	L	52, 55				
		1	3, 7	L	12, 15				
7									INSULATION, Floor
	5122 454AA	1	2, 6	L	12, 15				
		1	2, 6	L	52, 55				
		1	3, 7	L	12, 15				
8									INSULATION, Floor
	5122 436AA	1	2, 6	L	16				
		1	2, 6	L	56				
		1	3, 7	L	16				
9									INSULATION, Floor
	5122 455AA	1	2, 6	L	16				
		1	2, 6	L	56				
		1	3, 7	L	16				
10									INSULATION, Floor
	5122 453AA	1	2, 6	L	11, 14				
		1	2, 6	L	51, 54				
11									INSULATION, Floor
	5122 453AA	1	2, 6	L	11, 14				
		1	2, 6	L	51, 54				

Refer to Model Legend Information Bookmark

Insulation Floor
Figure IVA-350

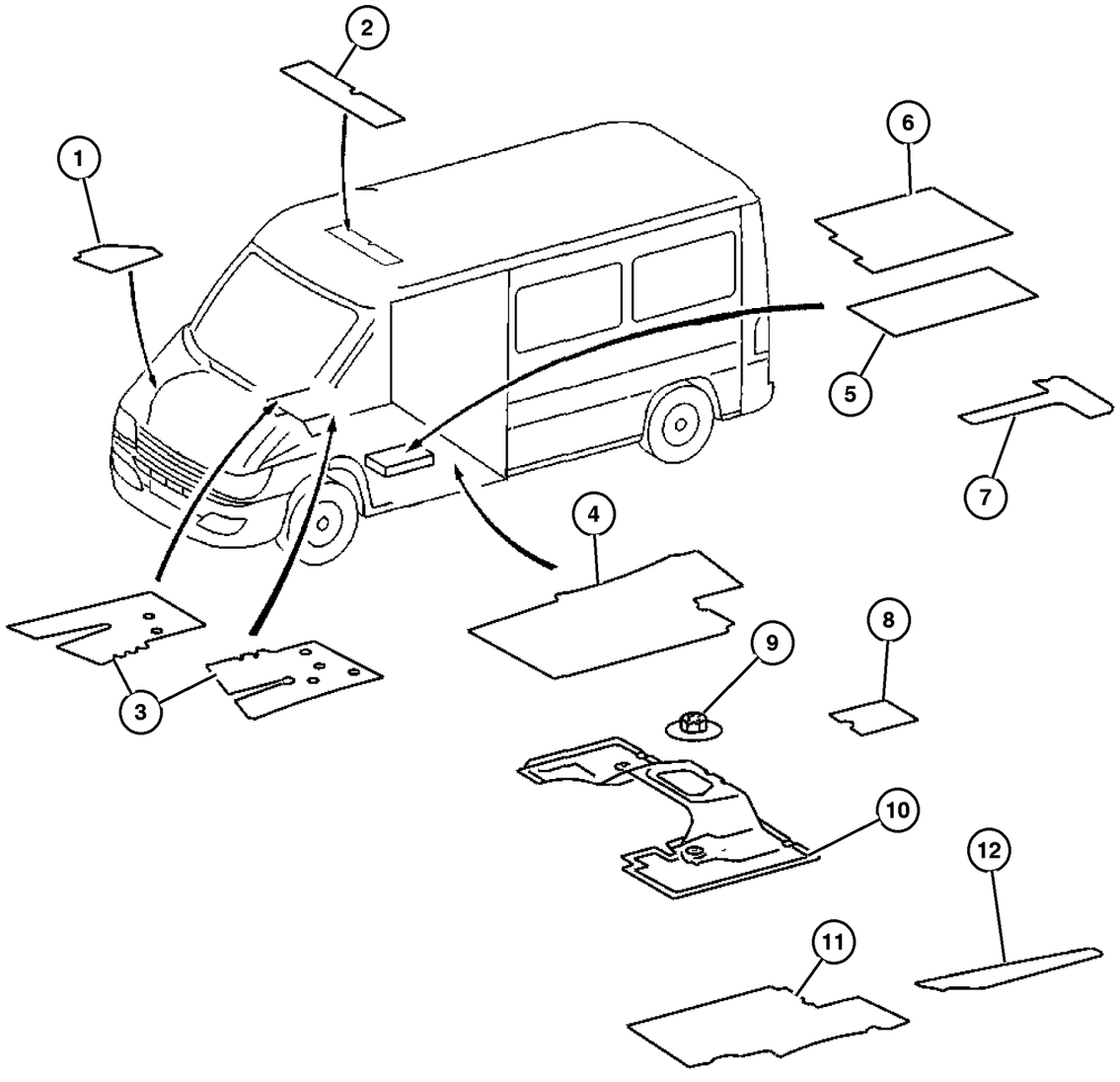

ITEM	PART NUMBER	QTY	LINE	SERIES	BODY	ENGINE	TRANS	TRIM	DESCRIPTION
1									SILENCER, Wheelhouse
	5122 468AA	1	2, 6	L	01, 02, 06				Inside Left
		1	2, 6	L	11, 12, 14, 15, 16				Inside Left
		1	2, 6	L	51, 52, 54, 55, 56				Inside Left
		1	3, 7	L	02, 06				Inside Left
		1	3, 7	L	12, 15, 16				Inside Left
	5122 469AA	1	2, 6	L	01, 02, 06				Inside Right
		1	2, 6	L	11, 12, 14, 15, 16				Inside Right
		1	2, 6	L	51, 52, 54, 55, 56				Inside Right
		1	3, 7	L	02, 06				Inside Right
		1	3, 7	L	12, 15, 16				Inside Right
2									INSULATION, Roof Headliner
	5122 541AA	1	2, 6	L	01, 02, 06				
		1	2, 6	L	11, 12, 14, 15, 16				
		1	2, 6	L	51, 52, 54, 55, 56				
		1	3, 7	L	02, 06				
		1	3, 7	L	12, 15, 16				
3									INSULATION, NONE, SPRINTER, Engine Room, (NOT SERVICED)
4									(Not Serviced) INSULATION, Floor
	5122 482AA	1	2, 6	L	01, 02, 06				
		1	2, 6	L	11, 12, 14, 15, 16				

Refer to Model Legend Information Bookmark

AR = Use as required - = Non illustrated part # = New this model year

March 3, 2006

« RETURN TO GROUP INDEX

»

Insulation Floor
Figure IVA-350

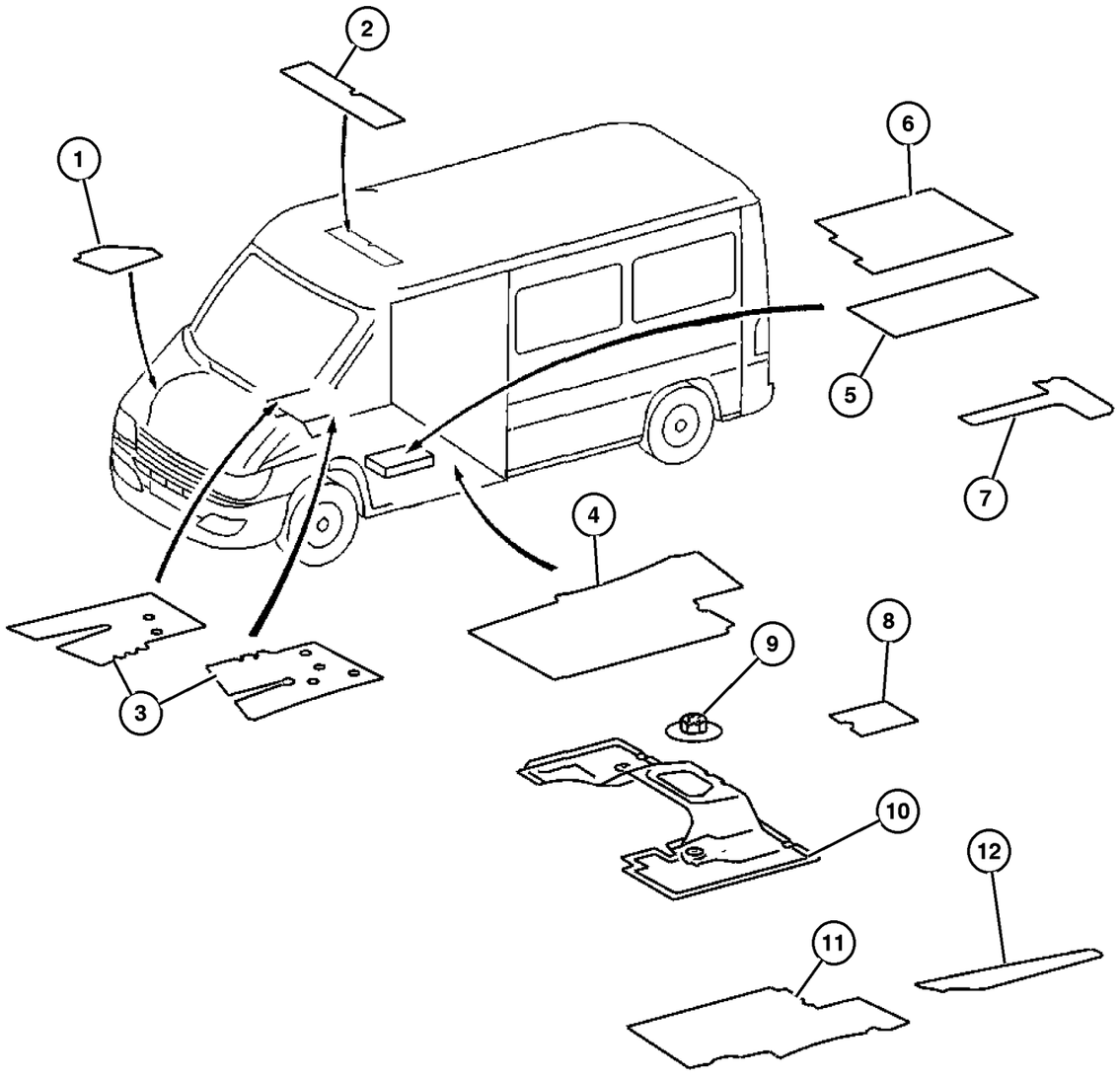

ITEM	PART NUMBER	QTY	LINE	SERIES	BODY	ENGINE	TRANS	TRIM	DESCRIPTION
		1	2, 6	L	51, 52, 54, 55, 56				
		1	3, 7	L	02, 06				
		1	3, 7	L	12, 15, 16				
5									INSULATION, NONE, SPRINTER, (NOT SERVICED) (Not Serviced)
6									INSULATION, Floor
	5122 535AA	1	2, 6	L	01, 02, 06				
		1	2, 6	L	11, 12, 14, 15, 16				
		1	2, 6	L	51, 52, 54, 55, 56				
		1	3, 7	L	02, 06				
		1	3, 7	L	12, 15, 16				
7									INSULATION, Floor
	5122 471AA	1	2, 6	L	01, 02, 06				
		1	2, 6	L	11, 12, 14, 15, 16				
		1	2, 6	L	51, 52, 54, 55, 56				
		1	3, 7	L	02, 06				
		1	3, 7	L	12, 15, 16				
8									INSULATION, Floor
	5122 473AA	2	2, 6	L	01, 02, 06				
		2	2, 6	L	11, 12, 14, 15, 16				
		2	2, 6	L	51, 52, 54, 55, 56				
		2	3, 7	L	02, 06				
		2	3, 7	L	12, 15, 16				
9									FASTENER, Buttonhead

Refer to Model Legend Information Bookmark

AR = Use as required - = Non illustrated part # = New this model year

March 3, 2006

Insulation Floor
Figure IVA-350

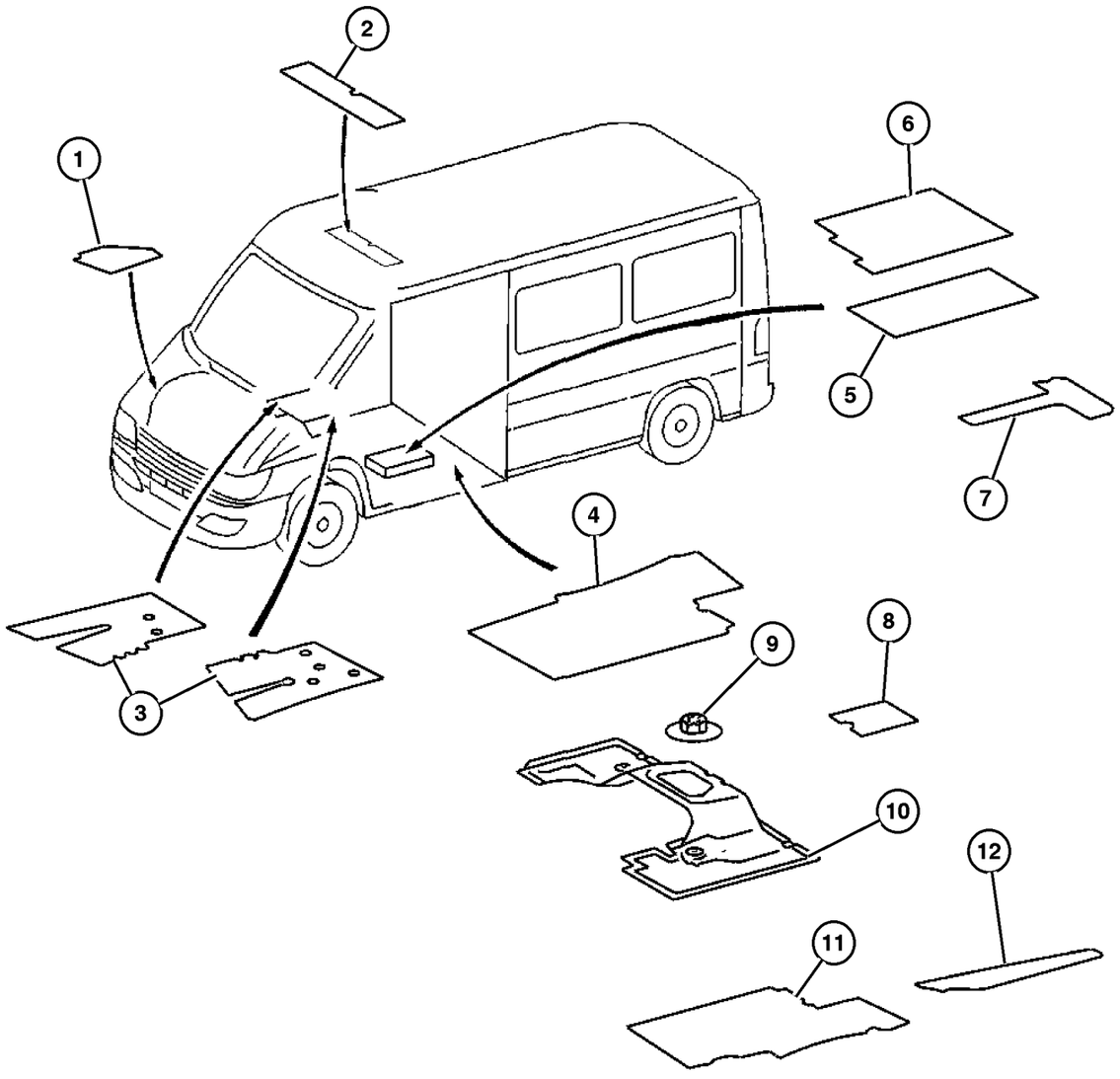

ITEM	PART NUMBER	QTY	LINE	SERIES	BODY	ENGINE	TRANS	TRIM	DESCRIPTION
	5125 593AA	1	2, 6	L	01, 02, 06				
		1	2, 6	L	11, 12, 14, 15, 16				
		1	2, 6	L	51, 52, 54, 55, 56				
		1	3, 7	L	02, 06				
		1	3, 7	L	12, 15, 16				
10									INSULATION, Floor
	5122 476AA	1	2, 6	L	01, 02, 06				
		1	2, 6	L	11, 12, 14, 15, 16				
		1	2, 6	L	51, 52, 54, 55, 56				
		1	3, 7	L	02, 06				
		1	3, 7	L	12, 15, 16				
11									INSULATION, Floor
	5122 478AA	1	2, 6	L	01, 02, 06				
		1	2, 6	L	11, 12, 14, 15, 16				
		1	2, 6	L	51, 52, 54, 55, 56				
		1	3, 7	L	02, 06				
		1	3, 7	L	12, 15, 16				
12									INSULATION, Floor
	5122 466AA	1	2, 6	L	01, 02, 06				
		1	2, 6	L	11, 12, 14, 15, 16				
		1	2, 6	L	51, 52, 54, 55, 56				
		1	3, 7	L	02, 06				

Refer to Model Legend Information Bookmark

Insulation Floor
Figure IVA-350

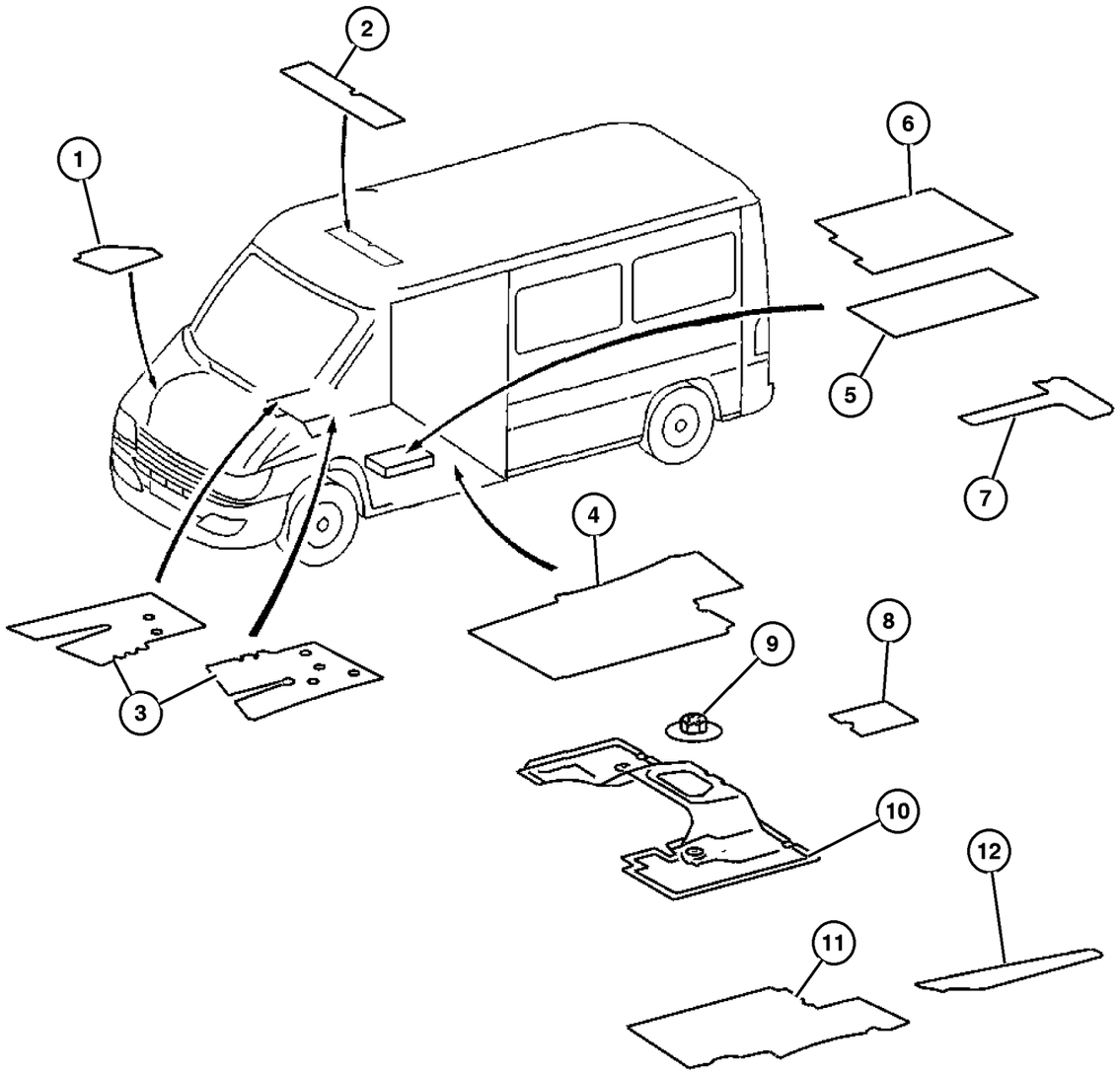

ITEM	PART NUMBER	QTY	LINE	SERIES	BODY	ENGINE	TRANS	TRIM	DESCRIPTION
		1	3, 7	L	12, 15, 16				
-13									INSULATION, Floor
	5122 467AA-	1	2, 6	L	01, 02, 06				Inside Right Entrance
		1	2, 6	L	11, 12, 14, 15, 16				Inside Right Entrance
		1	2, 6	L	51, 52, 54, 55, 56				Inside Right Entrance
		1	3, 7	L	02, 06				Inside Right Entrance
		1	3, 7	L	12, 15, 16				Inside Right Entrance
-14									INSULATION, Floor
	5122 470AA-	1	2, 6	L	01, 02, 06				Seat Box, Right
		1	2, 6	L	11, 12, 14, 15, 16				Seat Box, Right
		1	2, 6	L	51, 52, 54, 55, 56				Seat Box, Right
		1	3, 7	L	02, 06				Seat Box, Right
		1	3, 7	L	12, 15, 16				Seat Box, Right

Refer to Model Legend Information Bookmark

Front Door Trim
Figure IVA-410

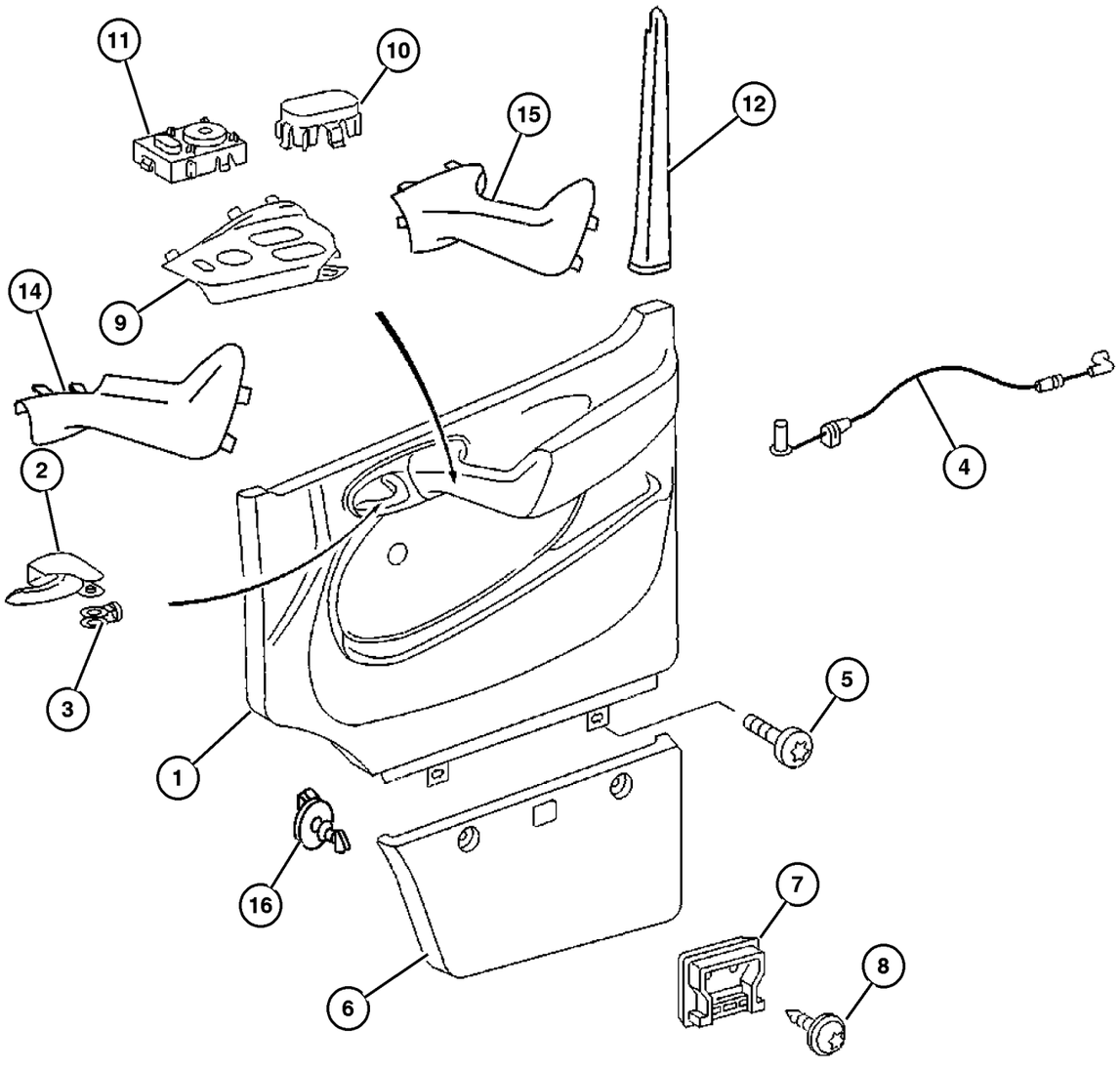

ITEM	PART NUMBER	QTY	LINE	SERIES	BODY	ENGINE	TRANS	TRIM	DESCRIPTION
1									PANEL, Front Door Trim
	5123 742AA	1	2, 6	L	01, 02, 06				With [JPA] Power Windows, Left
		1	2, 6	L	11, 12, 14, 15, 16				With [JPA] Power Windows, Left
		1	2, 6	L	51, 52, 54, 55, 56				With [JPA] Power Windows, Left
		1	3, 7	L	02, 06				With [JPA] Power Windows, Left
		1	3, 7	L	12, 15, 16				With [JPA] Power Windows, Left
	5123 747AA	1	2, 6	L	01, 02, 06				With [JPA] Power Windows, Right
		1	2, 6	L	11, 12, 14, 15, 16				With [JPA] Power Windows, Right
		1	2, 6	L	51, 52, 54, 55, 56				With [JPA] Power Windows, Right
		1	3, 7	L	02, 06				With [JPA] Power Windows, Right
		1	3, 7	L	12, 15, 16				With [JPA] Power Windows, Right
	5104 340AA	1	2, 6	L	01, 02, 06				Without [JPA] Power Windows, Left
		1	2, 6	L	11, 12, 14, 15, 16				Without [JPA] Power Windows, Left
		1	2, 6	L	51, 52, 54, 55, 56				Without [JPA] Power Windows, Left
		1	3, 7	L	02, 06				Without [JPA] Power Windows, Left
		1	3, 7	L	12, 15, 16				Without [JPA] Power Windows, Left
	5104 344AA	1	2, 6	L	01, 02, 06				Without [JPA] Power Windows, Right
		1	2, 6	L	11, 12, 14, 15, 16				Without [JPA] Power Windows, Right
		1	2, 6	L	51, 52, 54, 55, 56				Without [JPA] Power Windows, Right
		1	3, 7	L	02, 06				Without [JPA] Power Windows, Right

Refer to Model Legend Information Bookmark

AR = Use as required - = Non illustrated part # = New this model year

March 3, 2006

Front Door Trim
Figure IVA-410

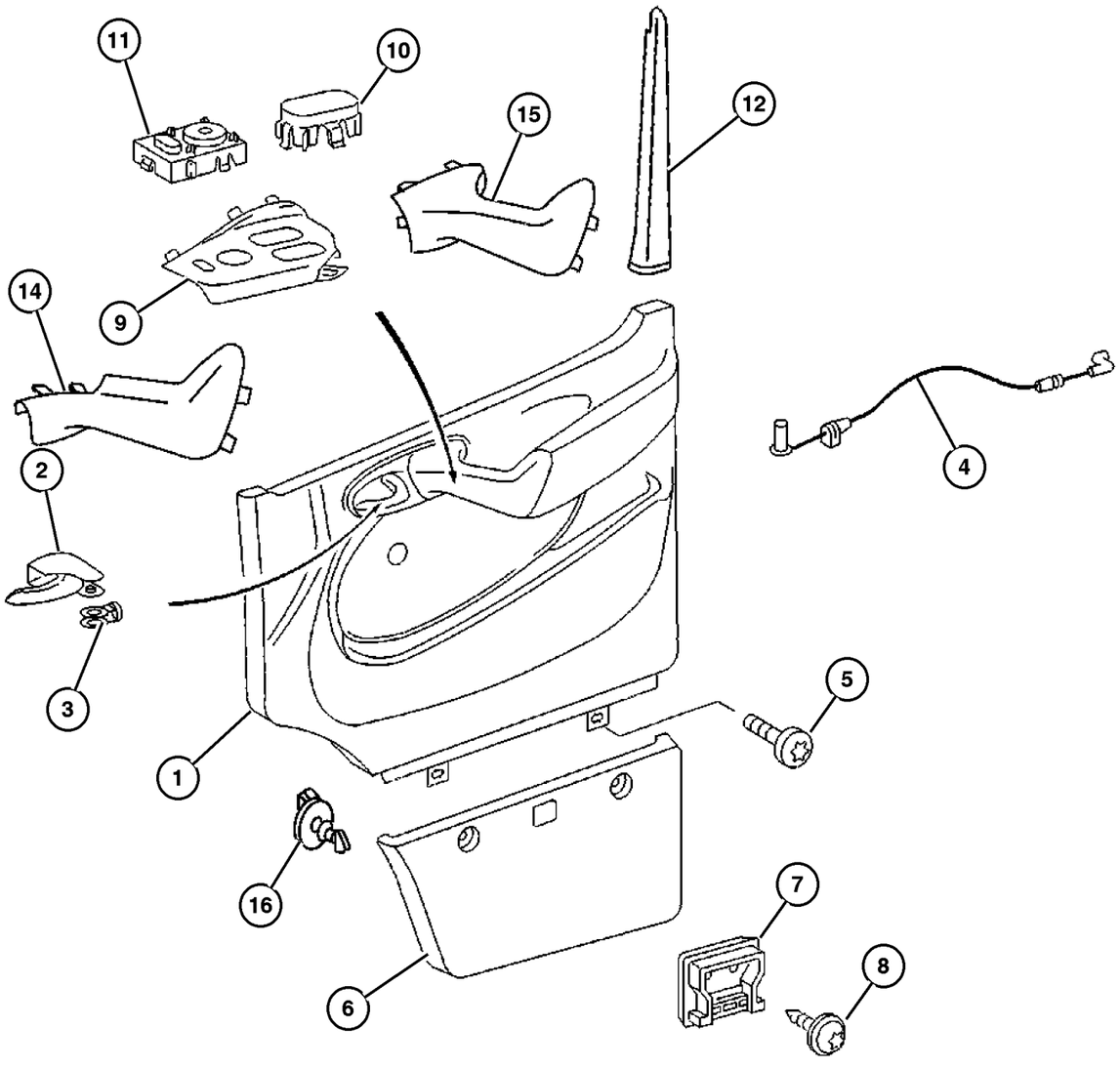

ITEM	PART NUMBER	QTY	LINE	SERIES	BODY	ENGINE	TRANS	TRIM	DESCRIPTION
		1	3, 7	L	12, 15, 16				Without [JPA] Power Windows, Right
2									HANDLE, Door Interior
	5133 515AA	1	2, 6	L	01, 02, 06				Right
		1	2, 6	L	11, 12, 14, 15, 16				Right
		1	2, 6	L	51, 52, 54, 55, 56				Right
		1	3, 7	L	02, 06				Right
		1	3, 7	L	12, 15, 16				Right
	5133 988AA	1	2, 6	L	01, 02, 06				Left
		1	2, 6	L	11, 12, 14, 15, 16				Left
		1	2, 6	L	51, 52, 54, 55, 56				Left
		1	3, 7	L	02, 06				Left
		1	3, 7	L	12, 15, 16				Left
	5123 788AA	1	2, 6	L	01, 02, 06				Pull Handle, Right
		1	2, 6	L	11, 12, 14, 15, 16				Pull Handle, Right
		1	2, 6	L	51, 52, 54, 55, 56				Pull Handle, Right
		1	3, 7	L	02, 06				Pull Handle, Right
		1	3, 7	L	12, 15, 16				Pull Handle, Right
	5123 789AA	1	2, 6	L	01, 02, 06				Pull Handle, Left
		1	2, 6	L	11, 12, 14, 15, 16				Pull Handle, Left
		1	2, 6	L	51, 52, 54, 55, 56				Pull Handle, Left
		1	3, 7	L	02, 06				Pull Handle, Left

Refer to Model Legend Information Bookmark

AR = Use as required - = Non illustrated part # = New this model year

March 3, 2006

Front Door Trim
Figure IVA-410

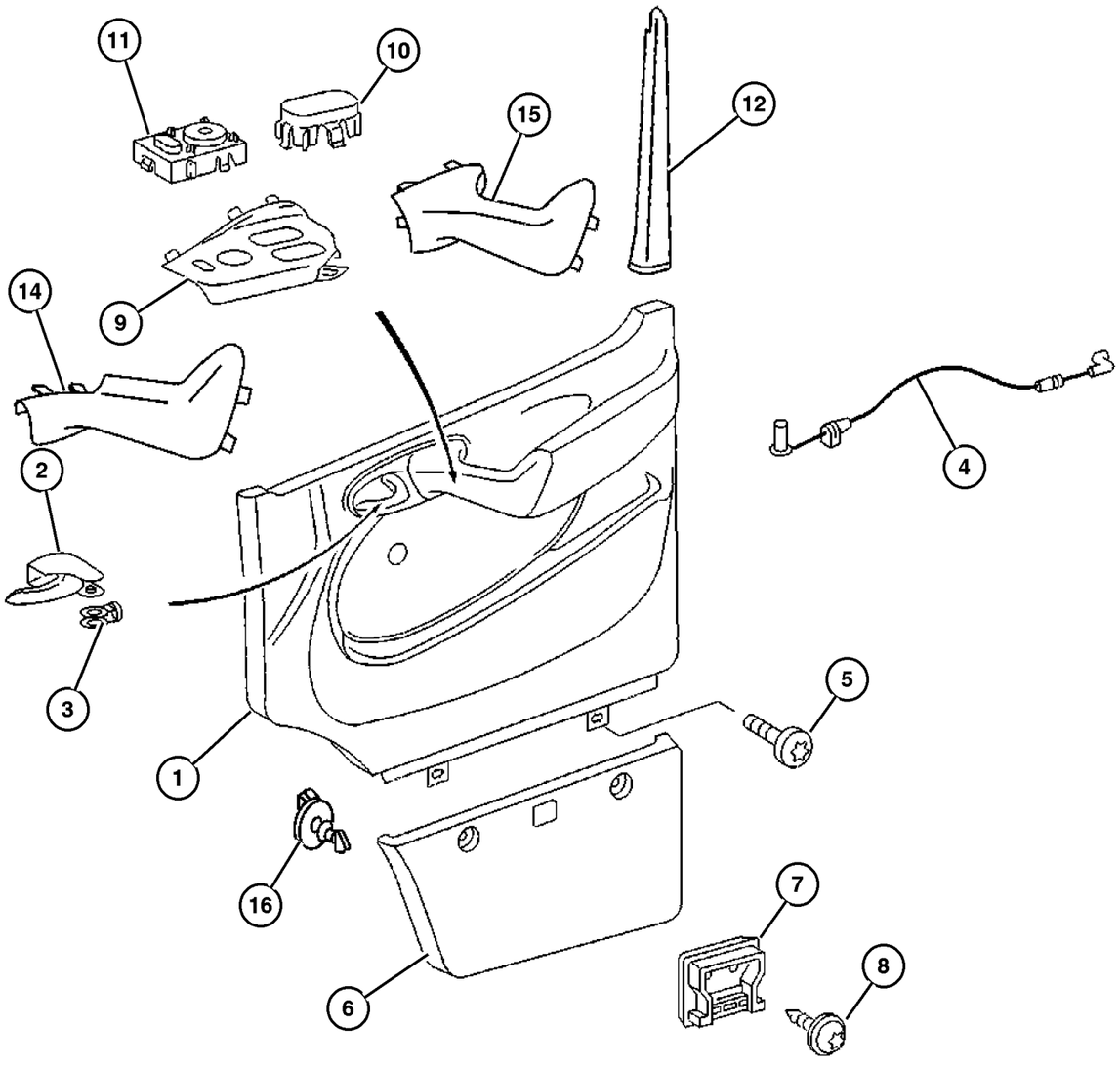

ITEM	PART NUMBER	QTY	LINE	SERIES	BODY	ENGINE	TRANS	TRIM	DESCRIPTION
		1	3, 7	L	12, 15, 16				Pull Handle, Left
3									CLIP, Door Trim
	5133 516AA	1	2, 6	L	01, 02, 06				Right
		1	2, 6	L	11, 12, 14, 15, 16				Right
		1	2, 6	L	51, 52, 54, 55, 56				Right
		1	3, 7	L	02, 06				Right
		1	3, 7	L	12, 15, 16				Right
	5133 989AA	1	2, 6	L	01, 02, 06				Left
		1	2, 6	L	11, 12, 14, 15, 16				Left
		1	2, 6	L	51, 52, 54, 55, 56				Left
		1	3, 7	L	02, 06				Left
		1	3, 7	L	12, 15, 16				Left
4									LINK, Door Latch
	5124 068AA	1	2, 6	L	01, 02, 06				Left
		1	2, 6	L	11, 12, 14, 15, 16				Left
		1	2, 6	L	51, 52, 54, 55, 56				Left
		1	3, 7	L	12, 15, 16				Left
	5124 069AA	1	2, 6	L	01, 02, 06				Right
		1	2, 6	L	11, 12, 14, 15, 16				Right
		1	2, 6	L	51, 52, 54, 55, 56				Right

Refer to Model Legend Information Bookmark

Front Door Trim
Figure IVA-410

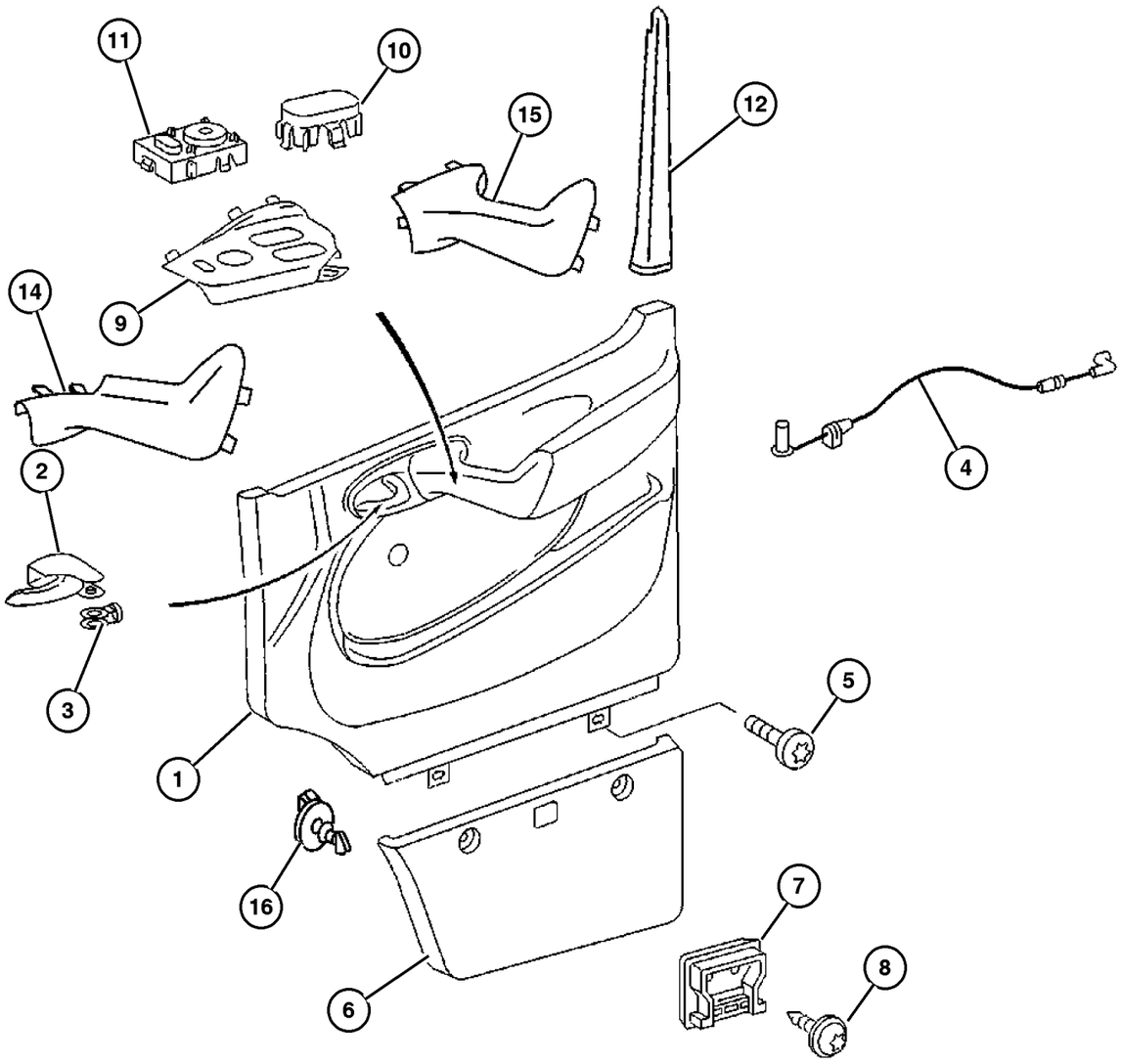

ITEM	PART NUMBER	QTY	LINE	SERIES	BODY	ENGINE	TRANS	TRIM	DESCRIPTION
		1	3, 7	L	12, 15, 16				Right
5	6104 142AA	2	2, 6	L	01, 02, 06				SCREW
		2	2, 6	L	11, 12, 14, 15, 16				
		2	2, 6	L	51, 52, 54, 55, 56				
		2	3, 7	L	12, 15, 16				
6	5104 325AA	2	3, 7	L	02, 06				COVER, Door Panel
		1	2, 6	L	11, 12, 14, 15, 16				Left
		1	2, 6	L	51, 52, 54, 55, 56				Left
		1	3, 7	L	12, 15, 16				Left
	5114 499AA	1	2, 6	L	01, 02, 06				Right
		1	2, 6	L	11, 12, 14, 15, 16				Right
		1	2, 6	L	51, 52, 54, 55, 56				Right
		1	3, 7	L	02, 06				Right
		1	3, 7	L	12, 15, 16				Right
7	5123 763AA	2	2, 6	L	11, 12, 14, 15, 16				BEZEL, Door Trim Panel
		2	2, 6	L	51, 52, 54, 55, 56				
		2	3, 7	L	12, 15, 16				
8									SCREW

Refer to Model Legend Information Bookmark

AR = Use as required - = Non illustrated part # = New this model year

March 3, 2006

« RETURN TO GROUP INDEX

Front Door Trim
Figure IVA-410

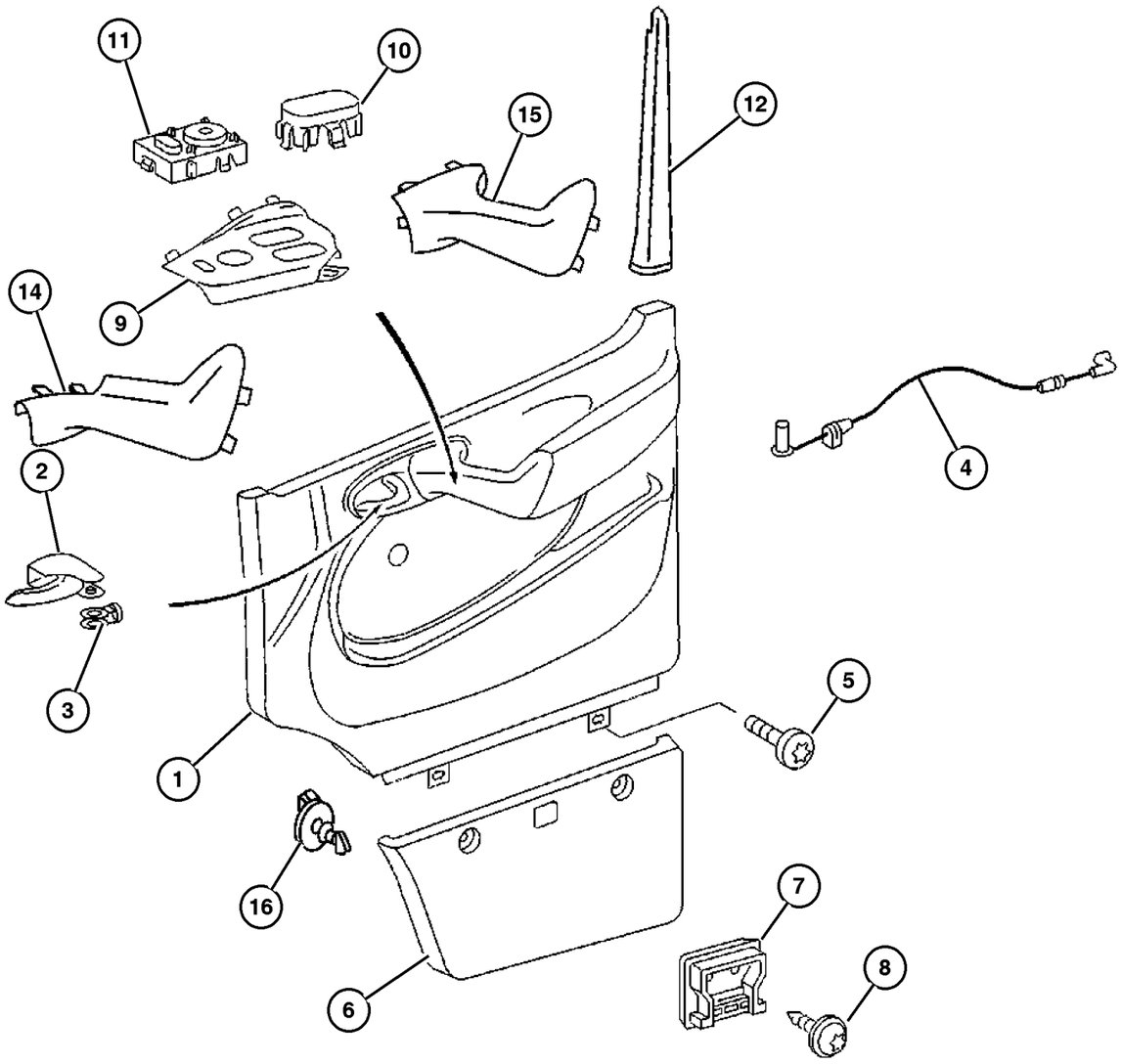

ITEM	PART NUMBER	QTY	LINE	SERIES	BODY	ENGINE	TRANS	TRIM	DESCRIPTION
	6104 567AA	4	2, 6	L	01, 02, 06				
		4	2, 6	L	11, 12, 14, 15, 16				
		4	2, 6	L	51, 52, 54, 55, 56				
		4	3, 7	L	02, 06				
		4	3, 7	L	12, 15, 16				
9									BEZEL, Power Window/Door Lock Switch
	5123 790AA	1	2, 6	L	01, 02, 06				Left
		1	2, 6	L	11, 12, 14, 15, 16				Left
		1	2, 6	L	51, 52, 54, 55, 56				Left
		1	3, 7	L	02, 06				Left
		1	3, 7	L	12, 15, 16				Left
	5123 791AA	1	2, 6	L	01, 02, 06				Right
		1	2, 6	L	11, 12, 14, 15, 16				Right
		1	2, 6	L	51, 52, 54, 55, 56				Right
		1	3, 7	L	02, 06				Right
		1	3, 7	L	12, 15, 16				Right
10									COVER, Switch
	5104 354AA	2	2, 6	L	01, 02, 06				
		2	2, 6	L	11, 12, 14, 15, 16				
		2	2, 6	L	51, 52, 54, 55, 56				
		2	3, 7	L	02, 06				

Refer to Model Legend Information Bookmark

AR = Use as required - = Non illustrated part # = New this model year

March 3, 2006

Front Door Trim
Figure IVA-410

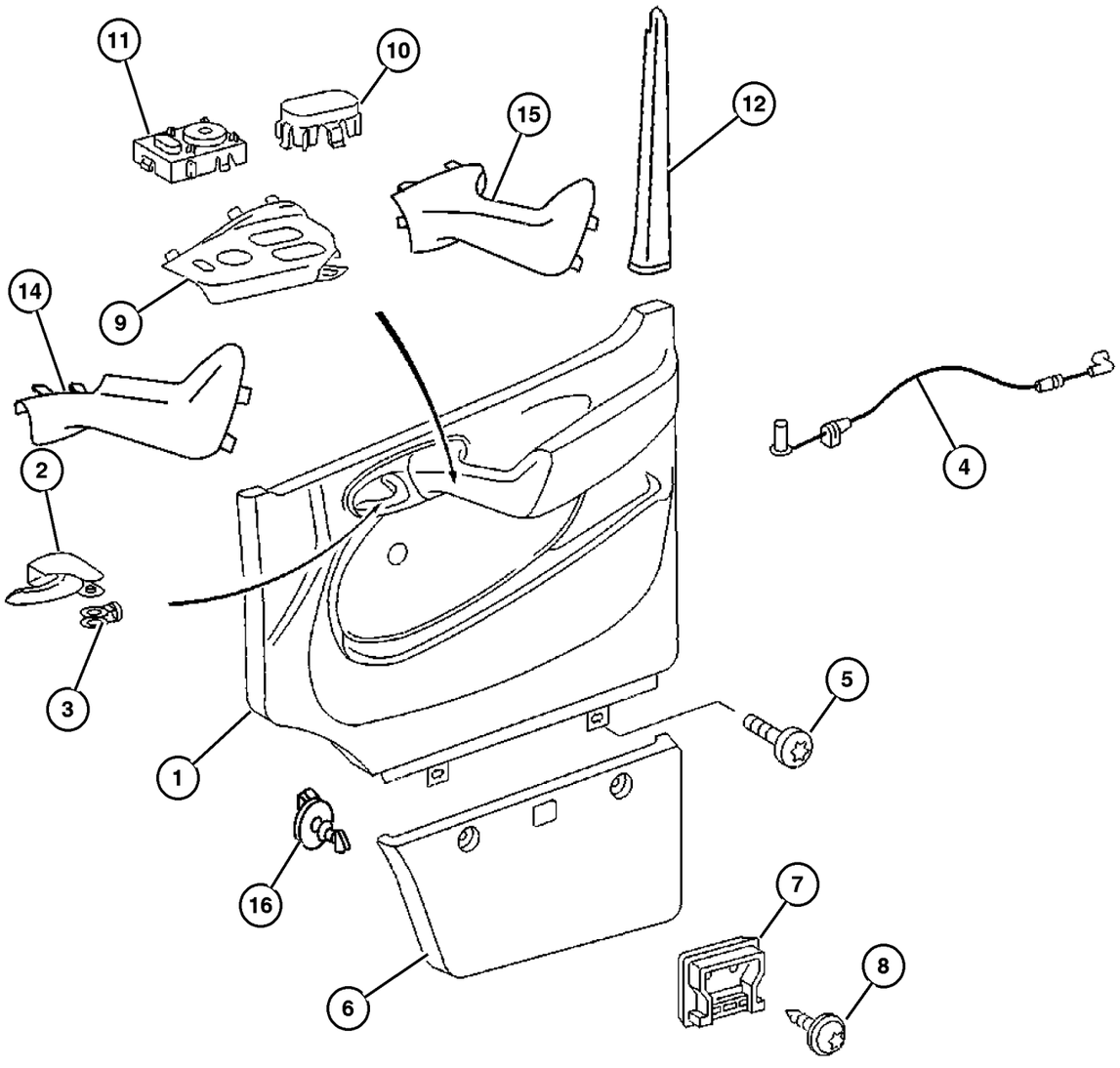

ITEM	PART NUMBER	QTY	LINE	SERIES	BODY	ENGINE	TRANS	TRIM	DESCRIPTION
		2	3, 7	L	12, 15, 16				
11									SWITCH, Mirror
	5123 792AA	1	2, 6	L	01, 02, 06				
		1	2, 6	L	11, 12, 14, 15, 16				
		1	2, 6	L	51, 52, 54, 55, 56				
		1	3, 7	L	02, 06				
		1	3, 7	L	12, 15, 16				
12									MOLDING, Front Door Closeout
	5104 322AA	1	2, 6	L	01, 02, 06				Left
		1	2, 6	L	11, 12, 14, 15, 16				Left
		1	2, 6	L	51, 52, 54, 55, 56				Left
		1	3, 7	L	02, 06				Left
		1	3, 7	L	12, 15, 16				Left
	5123 738AA	1	2, 6	L	01, 02, 06				Right
		1	2, 6	L	11, 12, 14, 15, 16				Right
		1	2, 6	L	51, 52, 54, 55, 56				Right
		1	3, 7	L	02, 06				Right
		1	3, 7	L	12, 15, 16				Right
-13									CLIP, Trim
	6104 897AA-	6	2, 6	L	01, 02, 06				
		6	2, 6	L	11, 12, 14, 15, 16				

Refer to Model Legend Information Bookmark

AR = Use as required - = Non illustrated part # = New this model year

March 3, 2006

Front Door Trim
Figure IVA-410

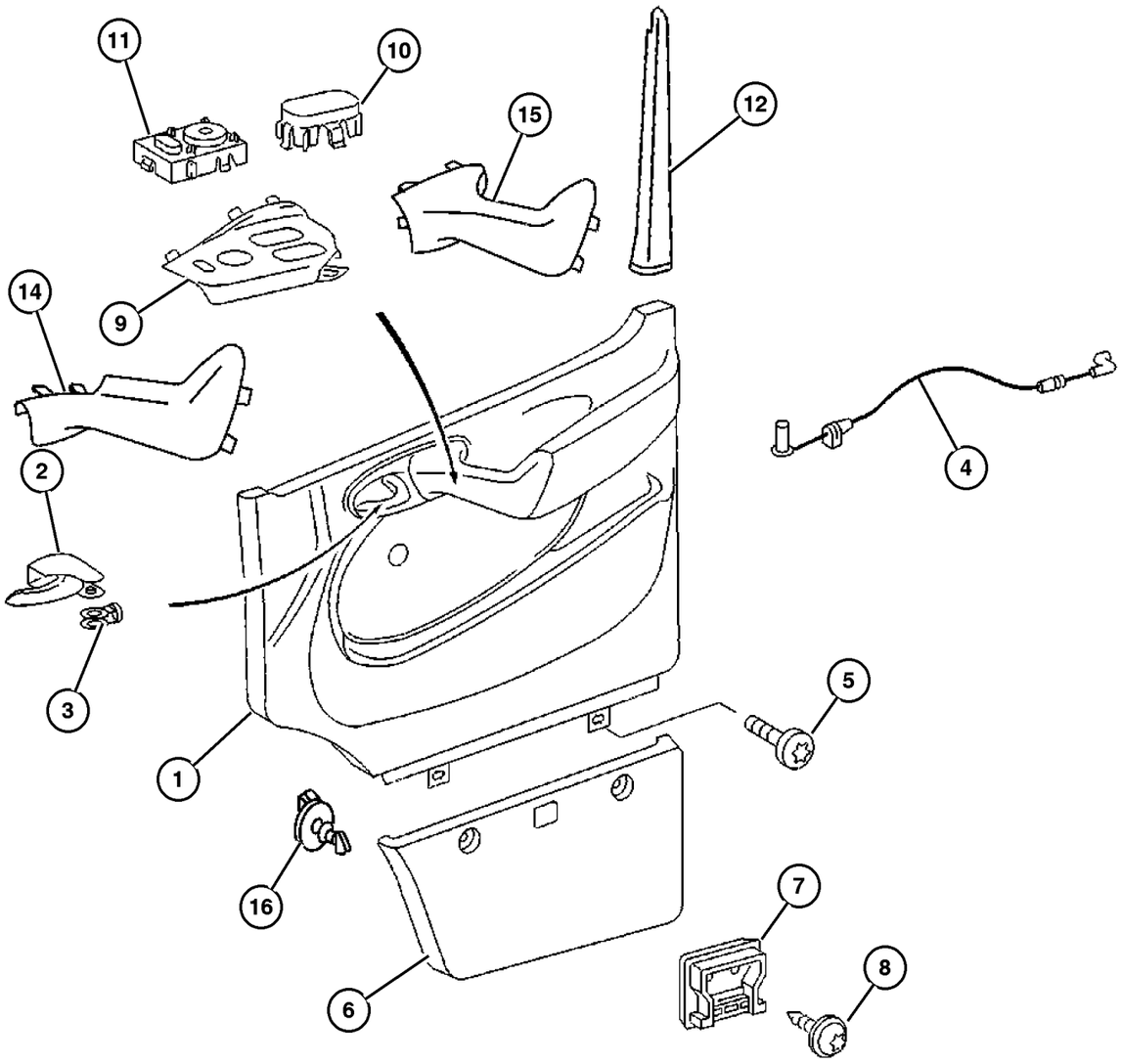

ITEM	PART NUMBER	QTY	LINE	SERIES	BODY	ENGINE	TRANS	TRIM	DESCRIPTION
		6	2, 6	L	51, 52, 54, 55, 56				
		6	3, 7	L	02, 06				
		6	3, 7	L	12, 15, 16				
14									HANDLE, Door Interior
	5123 788AA	1	2, 6	L	01, 02, 06				With [JPA] Power Heated Mirrors, Left
		1	2, 6	L	11, 12, 14, 15, 16				With [JPA] Power Heated Mirrors, Left
		1	2, 6	L	51, 52, 54, 55, 56				With [JPA] Power Heated Mirrors, Left
		1	3, 7	L	02, 06				With [JPA] Power Heated Mirrors, Left
		1	3, 7	L	12, 15, 16				With [JPA] Power Heated Mirrors, Left
	5123 789AA	1	2, 6	L	01, 02, 06				With [JPA] Power Heated Mirrors, Right
		1	2, 6	L	11, 12, 14, 15, 16				With [JPA] Power Heated Mirrors, Right
		1	2, 6	L	51, 52, 54, 55, 56				With [JPA] Power Heated Mirrors, Right
		1	3, 7	L	02, 06				With [JPA] Power Heated Mirrors, Right
		1	3, 7	L	12, 15, 16				With [JPA] Power Heated Mirrors, Right
15									HANDLE, Door Interior
	5123 786AA	1	2, 6	L	01, 02, 06				Without [JPA] Power Mirrors, Left
		1	2, 6	L	11, 12, 14, 15, 16				Without [JPA] Power Mirrors, Left
		1	2, 6	L	51, 52, 54, 55, 56				Without [JPA] Power Mirrors, Left
		1	3, 7	L	02, 06				Without [JPA] Power Mirrors, Left
		1	3, 7	L	12, 15, 16				Without [JPA] Power Mirrors, Left
	5123 787AA	1	2, 6	L	01, 02, 06				Without [JPA] Power Mirrors, Right

Refer to Model Legend Information Bookmark

Front Door Trim
Figure IVA-410

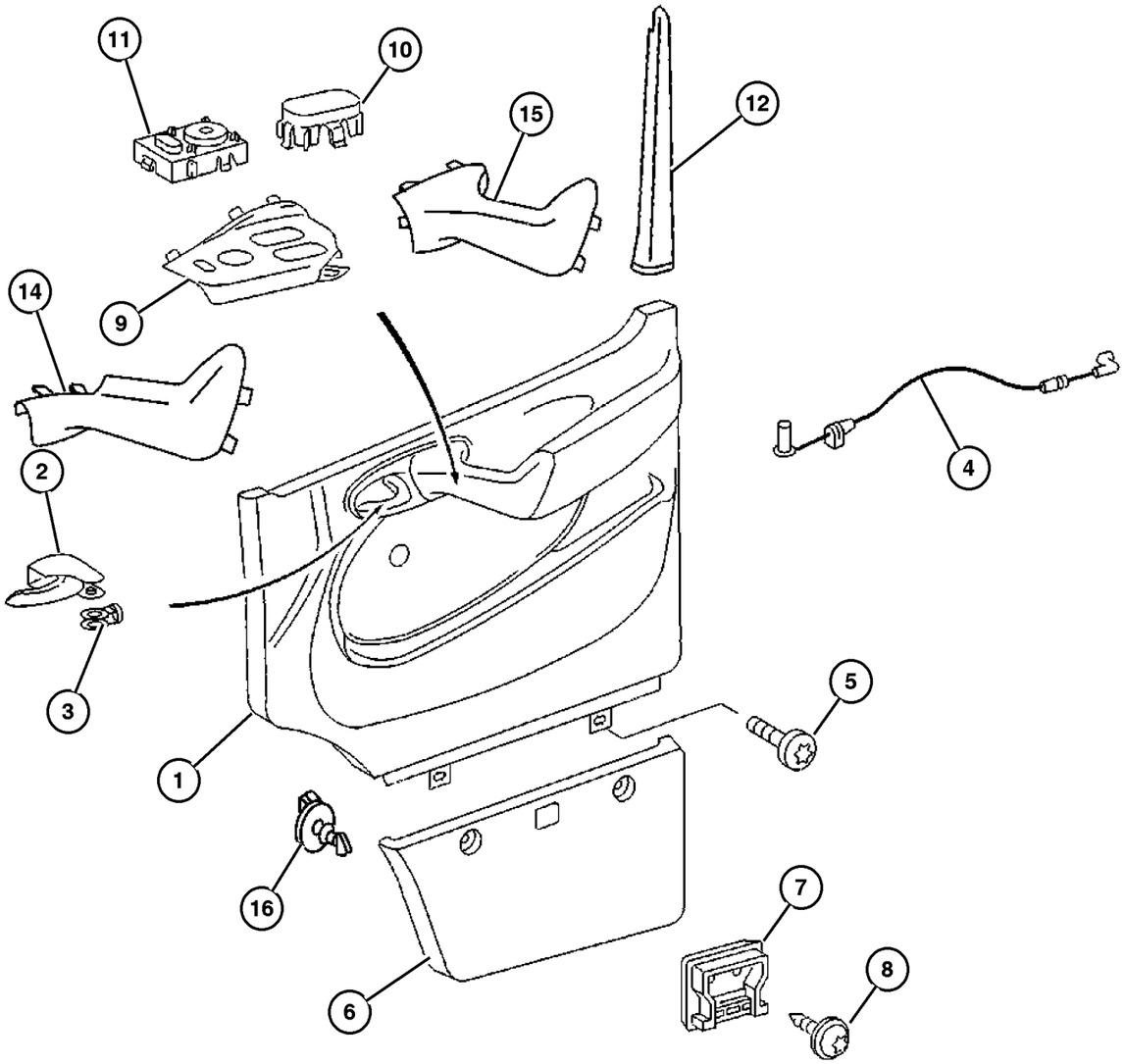

ITEM	PART NUMBER	QTY	LINE	SERIES	BODY	ENGINE	TRANS	TRIM	DESCRIPTION
		1	2, 6	L	11, 12, 14, 15, 16				Without [JPA] Power Mirrors, Right
		1	2, 6	L	51, 52, 54, 55, 56				Without [JPA] Power Mirrors, Right
		1	3, 7	L	02, 06				Without [JPA] Power Mirrors, Right
		1	3, 7	L	12, 15, 16				Without [JPA] Power Mirrors, Right
16	5133 517AA	2	2, 6	L	01, 02, 06				RETAINER, Trim Panel
		2	2, 6	L	11, 12, 14, 15, 16				
		2	2, 6	L	51, 52, 54, 55, 56				
		2	3, 7	L	02, 06				
		2	3, 7	L	12, 15, 16				

Refer to Model Legend Information Bookmark

AR = Use as required - = Non illustrated part # = New this model year

March 3, 2006

« RETURN TO GROUP INDEX

«

Sliding Door Trim
Figure IVA-420

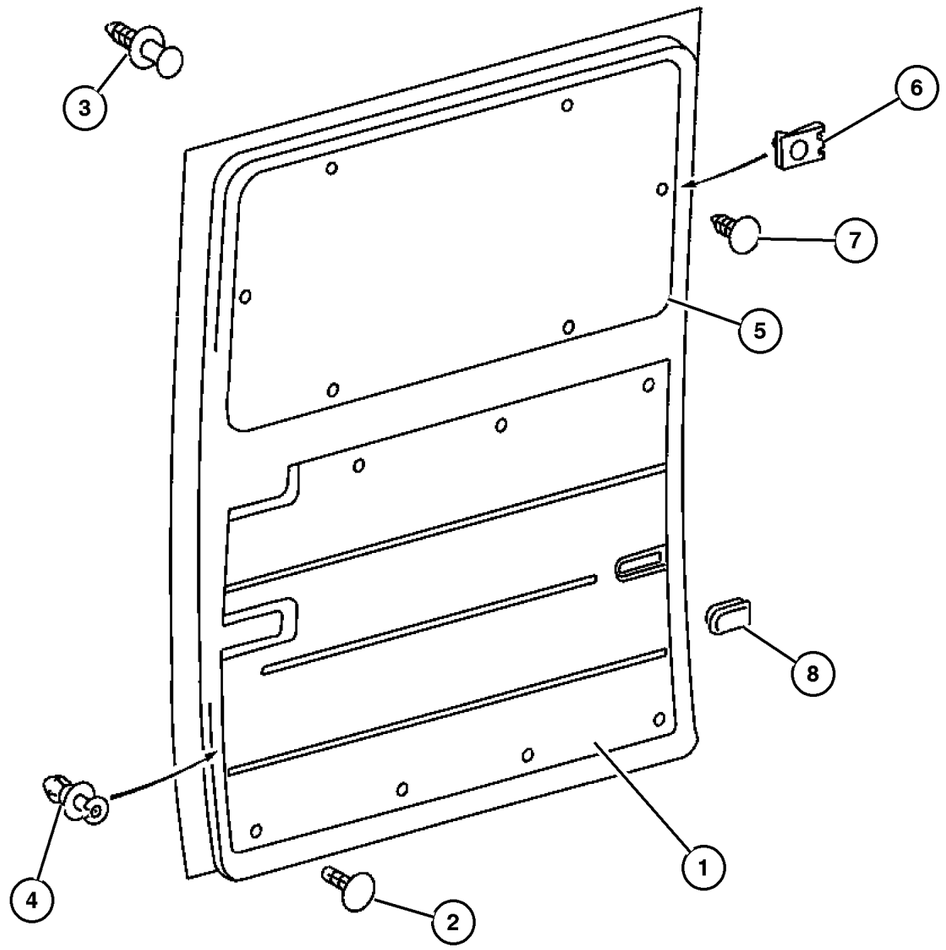

ITEM	PART NUMBER	QTY	LINE	SERIES	BODY	ENGINE	TRANS	TRIM	DESCRIPTION
Sales Codes:									
[4UW] = Interior Paneling Luxury									
[CMF] = Cargo Panels									
[GKA] = Right Sliding Door									
[GKE] = Left Sliding Door									
[GKG] = High Clearance									
1									PANEL, Sliding Door Trim
	5104 366AA	1	2, 6	L	11, 12, 14, 15, 16				With [GKA] Sliding Right Door
		1	2, 6	L	51, 52, 54, 55, 56				With [GKA] Sliding Right Door
		1	3, 7	L	12, 15, 16				With [GKA] Sliding Right Door
	5104 367AA	1	2, 6	L	11, 12, 14, 15, 16				With [GKA] Sliding Right Door and [CMF] Cargo Panels
		1	3, 7	L	12, 15, 16				With [GKA] Sliding Right Door and [CMF] Cargo Panels
	5123 841AA	1	2, 6	L	11, 12, 14, 15, 16				With [GKE] Sliding Left Door and [4UW] Interior Paneling Luxury
		1	2, 6	L	51, 52, 54, 55, 56				With [GKE] Sliding Left Door and [4UW] Interior Paneling Luxury
		1	3, 7	L	12, 15, 16				With [GKE] Sliding Left Door and [4UW] Interior Paneling Luxury
	5123 845AA	1	2, 6	L	11, 12, 14, 15, 16				With [GKA] Sliding Right Door and [4UW] Interior Paneling
		1	2, 6	L	51, 52, 54, 55, 56				With [GKA] Sliding Right Door and [4UW] Interior Paneling
		1	3, 7	L	12, 15, 16				With [GKA] Sliding Right Door and [4UW] Interior Paneling
	5123 875AA	1	2, 6	L	11, 12, 14, 15, 16				With [GKE] Sliding Left Door and [CMF] Full Laminated Wood
		1	3, 7	L	12, 15, 16				With [GKE] Sliding Left Door and [CMF] Full Laminated Wood
	5123 877AA	1	2, 6	L	11, 12, 14, 15, 16				With [GKE] Sliding Left Door

Refer to Model Legend Information Bookmark

Sliding Door Trim
Figure IVA-420

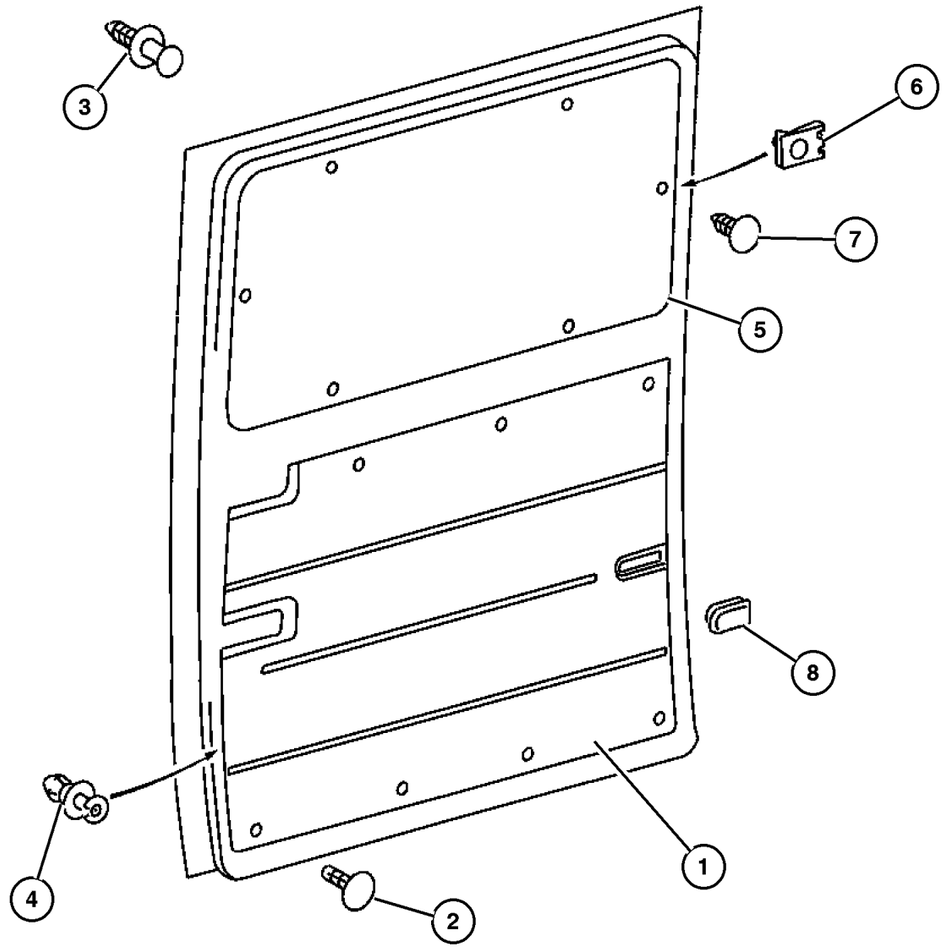

ITEM	PART NUMBER	QTY	LINE	SERIES	BODY	ENGINE	TRANS	TRIM	DESCRIPTION
		1	2, 6	L	51, 52, 54, 55, 56				With [GKE] Sliding Left Door
		1	3, 7	L	12, 15, 16				With [GKE] Sliding Left Door
	5123 881AA	1	2, 6	L	11, 12, 14, 15, 16				With [GKE] Sliding Left Door and [CTE] Washable Wall
		1	3, 7	L	12, 15, 16				With [GKE] Sliding Left Door and [CTE] Washable Wall
	5123 882AA	1	2, 6	L	11, 12, 14, 15, 16				With [GKA] Sliding Right Door and [CTE] Washable Wall
		1	3, 7	L	12, 15, 16				With [GKA] Sliding Right Door and [CTE] Washable Wall
2									PIN, Push
	5103 553AA	9	2, 6	L	11, 12, 14, 15, 16				
		9	2, 6	L	51, 52, 54, 55, 56				
		9	3, 7	L	12, 15, 16				
3									PIN, Push
	5103 925AA	8	2, 6	L	11, 12, 14, 15, 16				
		1	2, 6	L	51, 52, 54, 55, 56				
		8	3, 7	L	12, 15, 16				
4									PIN, Push
	6104 895AA	10	2, 6	L	11, 12, 14, 15, 16				
		10	2, 6	L	51, 52, 54, 55, 56				
		10	3, 7	L	12, 15, 16				
5									PANEL, Cargo Door, Upper Right & Left

Refer to Model Legend Information Bookmark

AR = Use as required - = Non illustrated part # = New this model year

March 3, 2006

Sliding Door Trim
Figure IVA-420

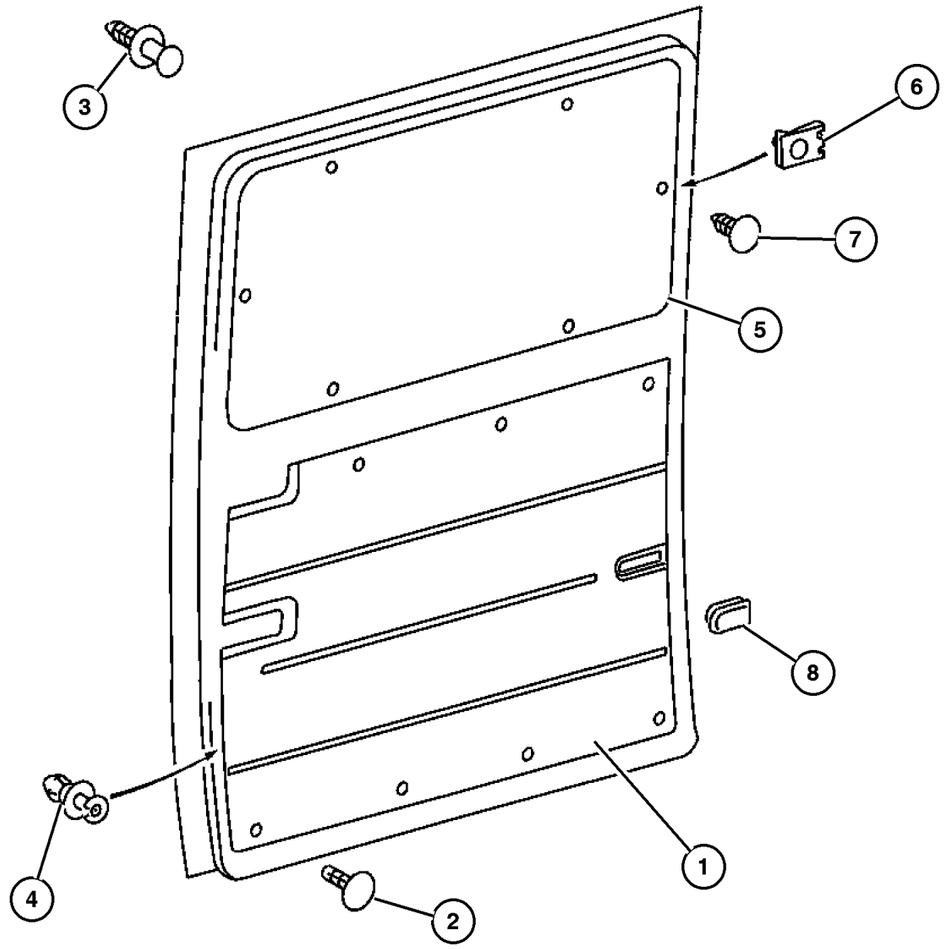

ITEM	PART NUMBER	QTY	LINE	SERIES	BODY	ENGINE	TRANS	TRIM	DESCRIPTION
	5123 883AA	1	2, 6	L	11, 12, 14, 15, 16				
		1	3, 7	L	12, 15, 16				
6									U-NUT
	5125 859AA	10	2, 6	L	11, 12, 14, 15, 16				
		10	3, 7	L	12, 15, 16				
7									PIN, Push
	5103 818AA	10	2, 6	L	11, 12, 14, 15, 16				
		10	3, 7	L	12, 15, 16				
8									PLUG, Access Hole
	5104 365AA	1	2, 6	L	11, 12, 14, 15, 16				Without [GKG], High Clearance
		1	2, 6	L	51, 52, 54, 55, 56				Without [GKG], High Clearance
		1	3, 7	L	16				Without [GKG], High Clearance
	5104 588AA	1	2, 6	L	11, 12, 14, 15, 16				With [GKG], High Clearance
		1	3, 7	L	12, 15				With [GKG], High Clearance
-9									CATCH, Sliding Partition Door
	5104 424AA-	1	2, 6	L	11, 12, 14, 15, 16				Cargo Partition
		1	3, 7	L	12, 15, 16				Cargo Partition
-10									TAPPING PLATE, Side Door Lock Striker
	5124 110AA-	2	2, 6	L	11, 12, 14, 15, 16				
		2	2, 6	L	51, 52, 54, 55, 56				
		2	3, 7	L	12, 15, 16				

Refer to Model Legend Information Bookmark

Rear Dual Door Trim
Figure IVA-430

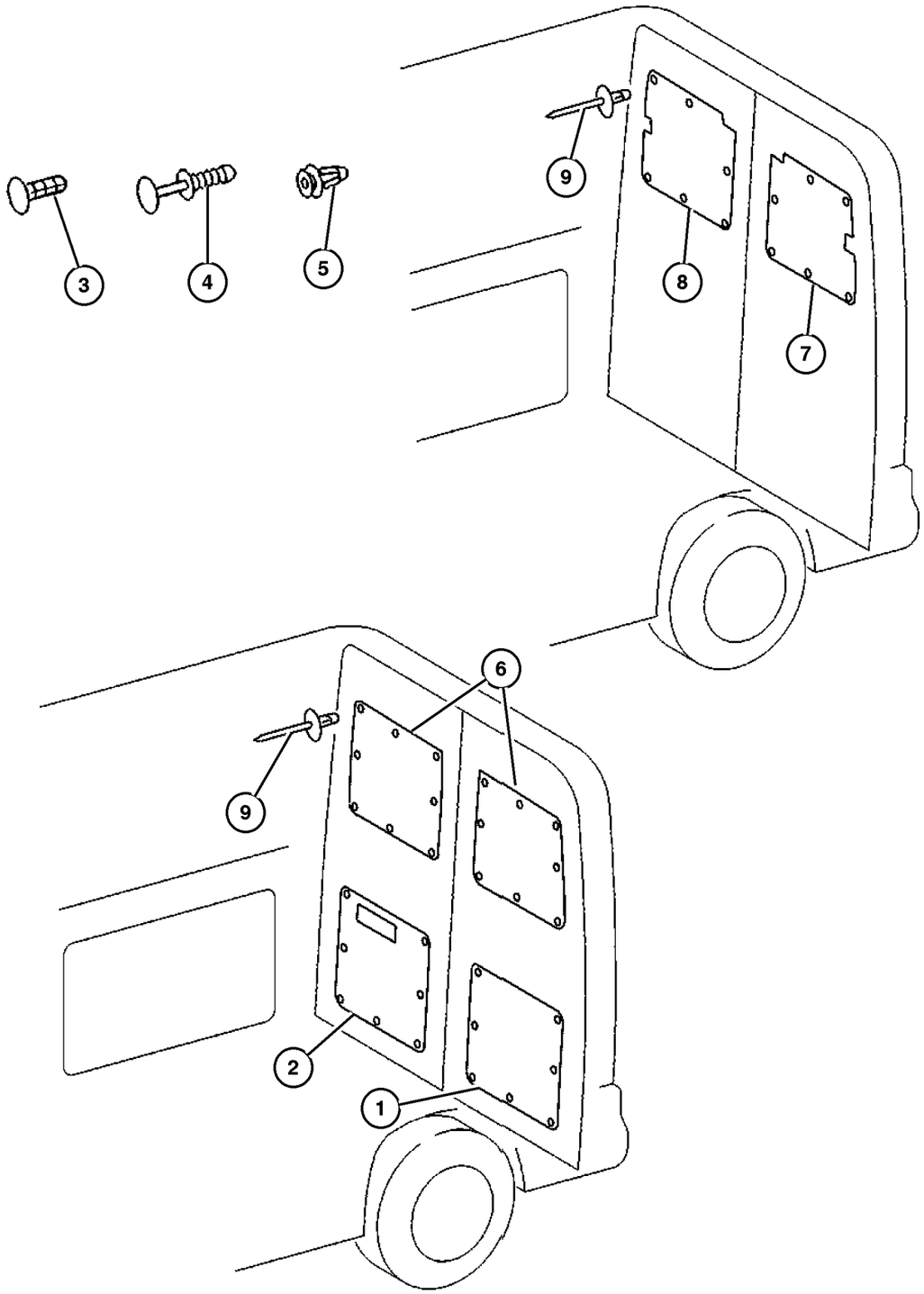

ITEM	PART NUMBER	QTY	LINE	SERIES	BODY	ENGINE	TRANS	TRIM	DESCRIPTION
1									PANEL, Cargo Door, Left
	5104 395AA	1	2, 6	L	11, 12, 14, 15, 16				Hard Fiber
		1	2, 6	L	51, 52, 54, 55, 56				Hard Fiber
		1	3, 7	L	12, 15, 16				Hard Fiber
	5123 950AA	1	2, 6	L	11, 12, 14, 15, 16				Fabric
		1	2, 6	L	51, 52, 54, 55, 56				Fabric
		1	3, 7	L	12, 15, 16				Fabric
	5124 024AA	1	2, 6	L	11, 12, 14, 15, 16				Plywood
		1	3, 7	L	12, 15, 16				Plywood
2									PANEL, Cargo Door, Right
	5104 396AA	1	2, 6	L	11, 12, 14, 15, 16				Hard Fiber
		1	2, 6	L	51, 52, 54, 55, 56				Hard Fiber
		1	3, 7	L	12, 15, 16				Hard Fiber
	5123 953AA	1	2, 6	L	11, 12, 14, 15, 16				Fabric
		1	2, 6	L	51, 52, 54, 55, 56				Fabric
		1	3, 7	L	12, 15, 16				Fabric
	5124 026AA	1	2, 6	L	11, 12, 14, 15, 16				Plymouth
		1	3, 7	L	12, 15, 16				Plymouth
3									PIN, Push, White

Refer to Model Legend Information Bookmark

AR = Use as required - = Non illustrated part # = New this model year

March 3, 2006

« RETURN TO GROUP INDEX

»

Rear Dual Door Trim
Figure IVA-430

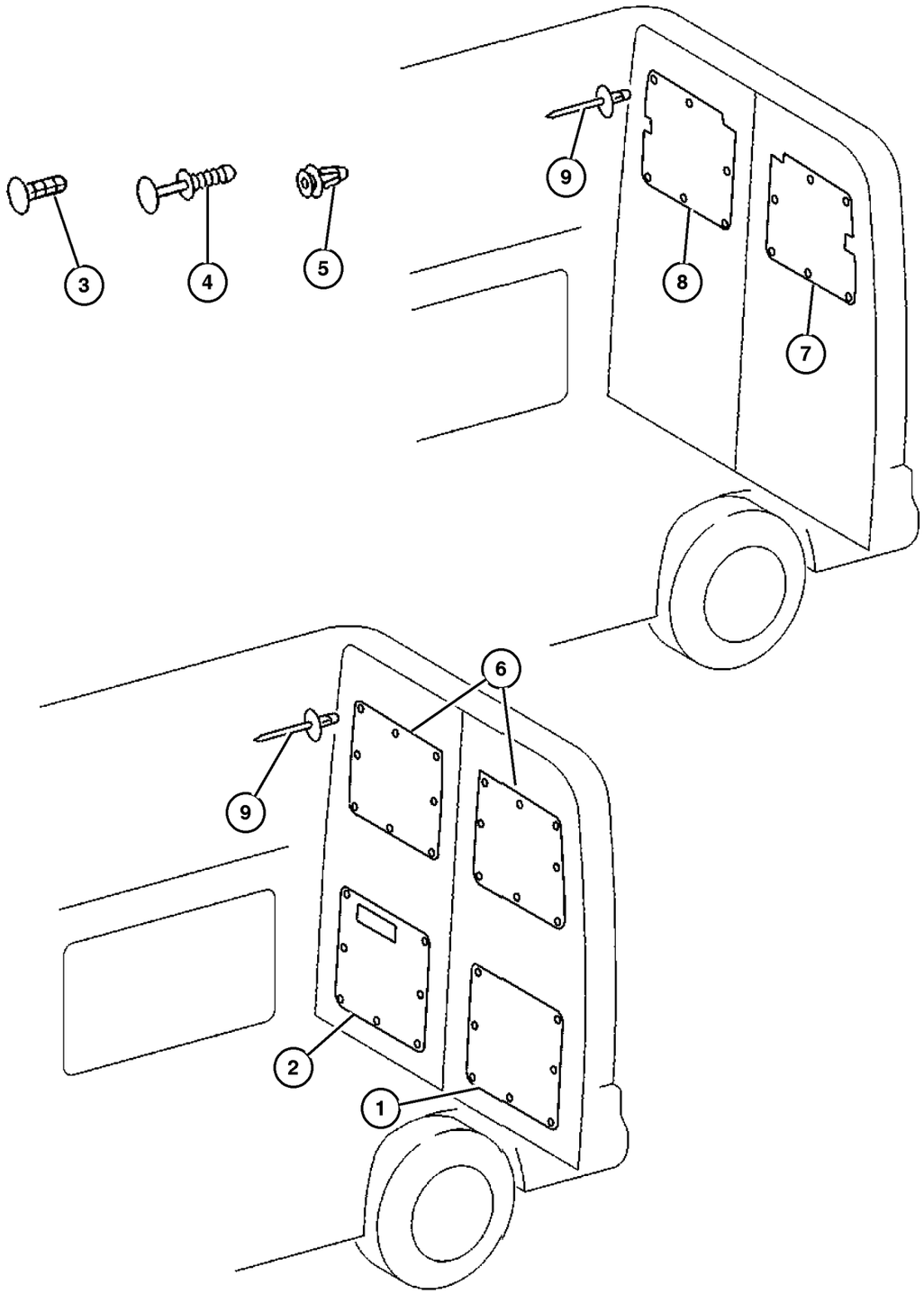

ITEM	PART NUMBER	QTY	LINE	SERIES	BODY	ENGINE	TRANS	TRIM	DESCRIPTION
	5103 553AA	7	2, 6	L	11, 12, 14, 15, 16				
		7	2, 6	L	51, 52, 54, 55, 56				
		7	3, 7	L	12, 15, 16				
4									PIN, Push
	5103 925AA	1	2, 6	L	11, 12, 14, 15, 16				
		1	2, 6	L	51, 52, 54, 55, 56				
		8	3, 7	L	12, 15, 16				
5									PIN, Push
	6104 895AA	15	2, 6	L	11, 12, 14, 15, 16				
		15	2, 6	L	51, 52, 54, 55, 56				
		15	3, 7	L	12, 15, 16				
6									PANEL, Cargo Door, Right & Left
	5124 035AA	1	2, 6	L	11, 12, 14, 15, 16				
		1	3, 7	L	12, 15, 16				
7									PANEL, Cargo Door, Left
	5124 036AA	1	2, 6	L	11, 12, 14, 15, 16				
		1	3, 7	L	12, 15, 16				
8									PANEL, Cargo Door, Right
	5124 036AA	1	2, 6	L	11, 12, 14, 15, 16				
		1	3, 7	L	12, 15, 16				
9									RIVET

Refer to Model Legend Information Bookmark

AR = Use as required - = Non illustrated part # = New this model year

March 3, 2006

« RETURN TO GROUP INDEX

« »

Rear Dual Door Trim
Figure IVA-430

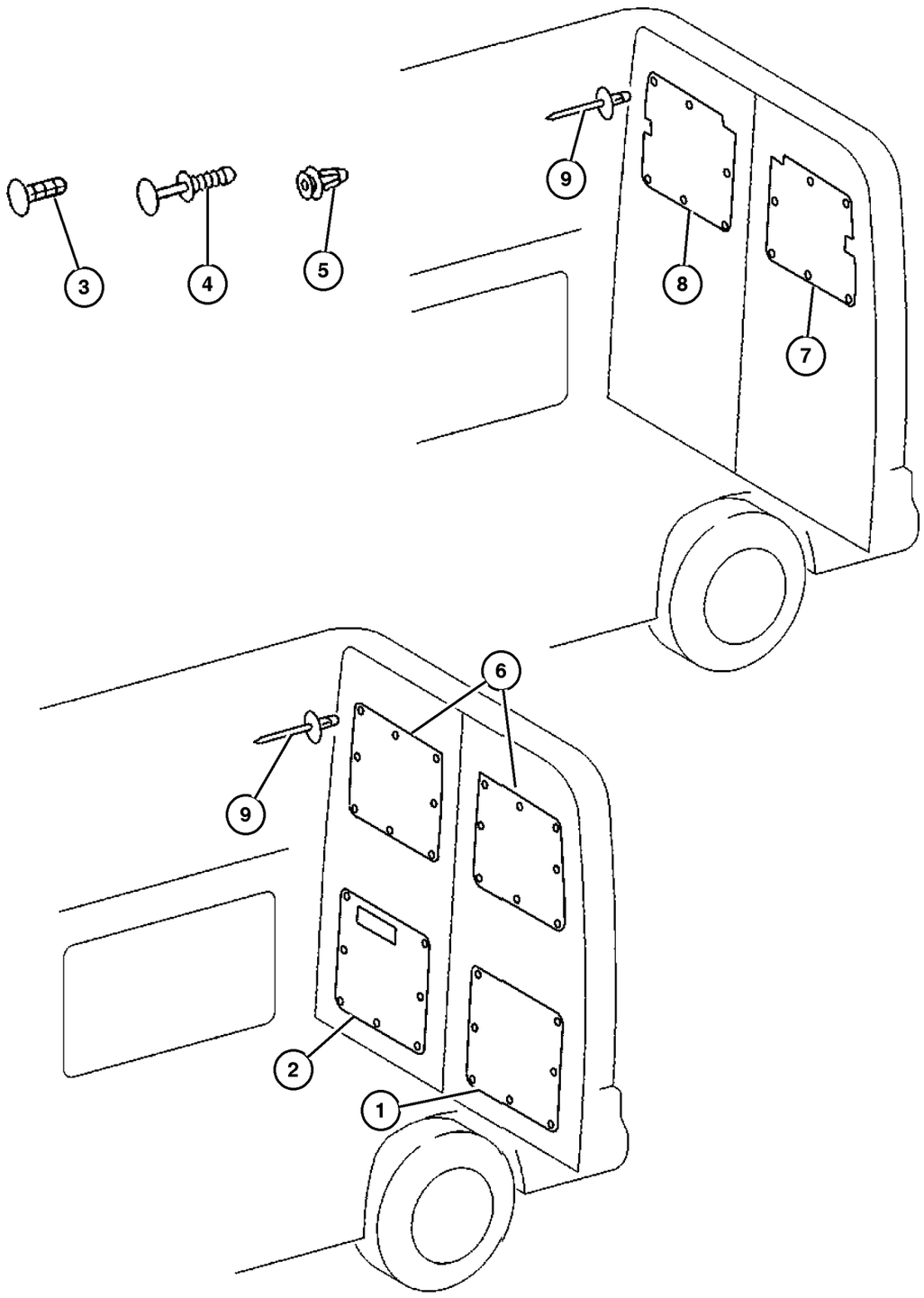

ITEM	PART NUMBER	QTY	LINE	SERIES	BODY	ENGINE	TRANS	TRIM	DESCRIPTION
	6104 865AA	10	2, 6	L	11, 12, 14, 15, 16				
		10	2, 6	L	51, 52, 54, 55, 56				
		10	3, 7	L	12, 15, 16				

Refer to Model Legend Information Bookmark

AR = Use as required - = Non illustrated part # = New this model year

March 3, 2006

« RETURN TO GROUP INDEX

Front Seat - Venice
Figure IVA-510

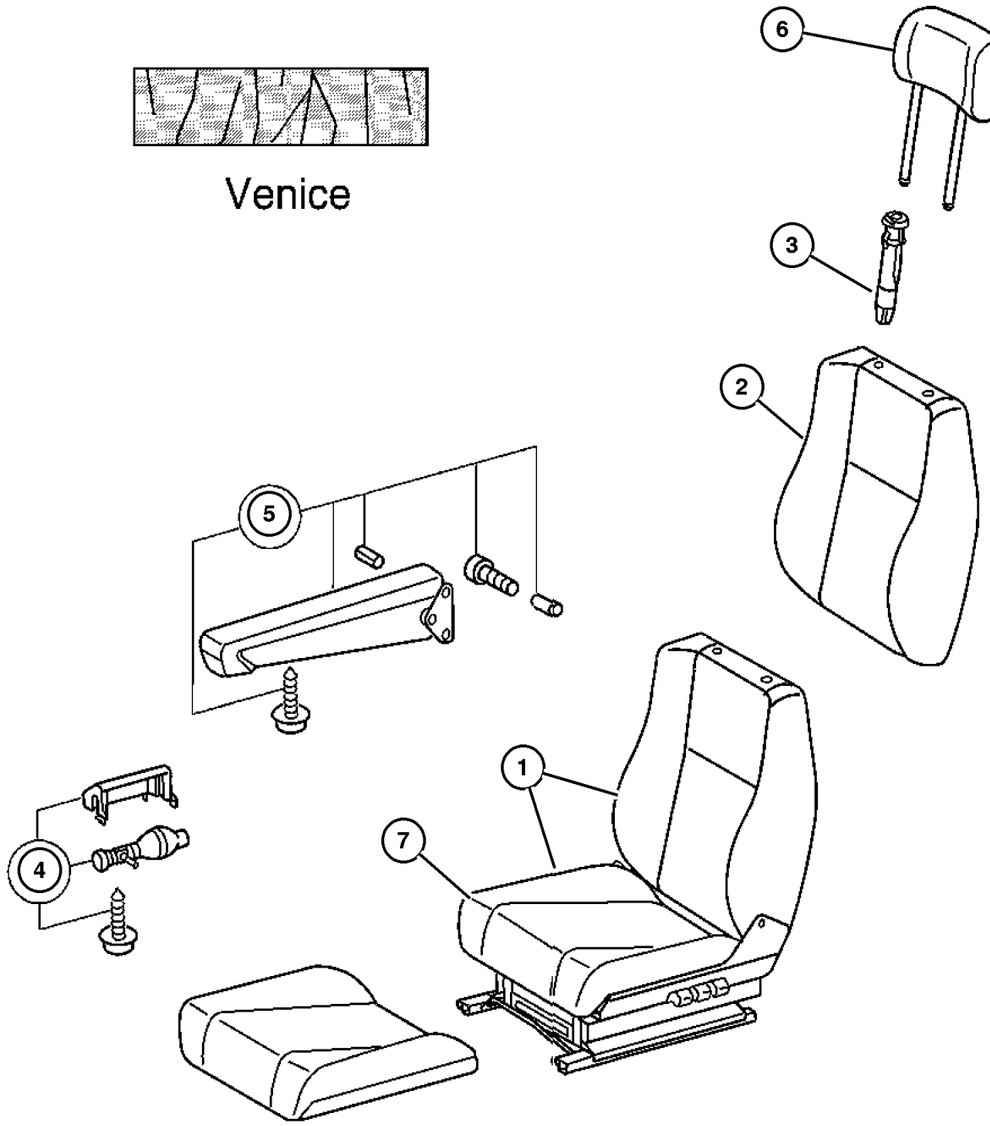

ITEM	PART NUMBER	QTY	LINE	SERIES	BODY	ENGINE	TRANS	TRIM	DESCRIPTION
1									SEAT COMPLETE, Front
	5127 100AA	1	2, 6	L	01, 02, 06				Right
		1	2, 6	L	11, 12, 14, 15, 16				Right
		1	2, 6	L	51, 52, 54, 55, 56				Right
		1	3, 7	L	02, 06				Right
		1	3, 7	L	12, 15, 16				Right
	5127 102AA	1	2, 6	L	01, 02, 06				Left
		1	2, 6	L	11, 12, 14, 15, 16				Left
		1	2, 6	L	51, 52, 54, 55, 56				Left
		1	3, 7	L	02, 06				Left
		1	3, 7	L	12, 15, 16				Left
	5127 105AA	1	2, 6	L	01, 02, 06				Heated, Left
		1	2, 6	L	11, 12, 14, 15, 16				Heated, Left
		1	2, 6	L	51, 52, 54, 55, 56				Heated, Left
		1	3, 7	L	02, 06				Heated, Left
		1	3, 7	L	12, 15, 16				Heated, Left
	5127 110AA	1	2, 6	L	01, 02, 06				Comfort seat, Left
		1	2, 6	L	11, 12, 14, 15, 16				Comfort seat, Left
		1	2, 6	L	51, 52, 54, 55, 56				Comfort seat, Left
		1	3, 7	L	02, 06				Comfort seat, Left
		1	3, 7	L	12, 15, 16				Comfort seat, Left

Refer to Model Legend Information Bookmark

AR = Use as required - = Non illustrated part # = New this model year

March 3, 2006

« RETURN TO GROUP INDEX

»

Front Seat - Venice
Figure IVA-510

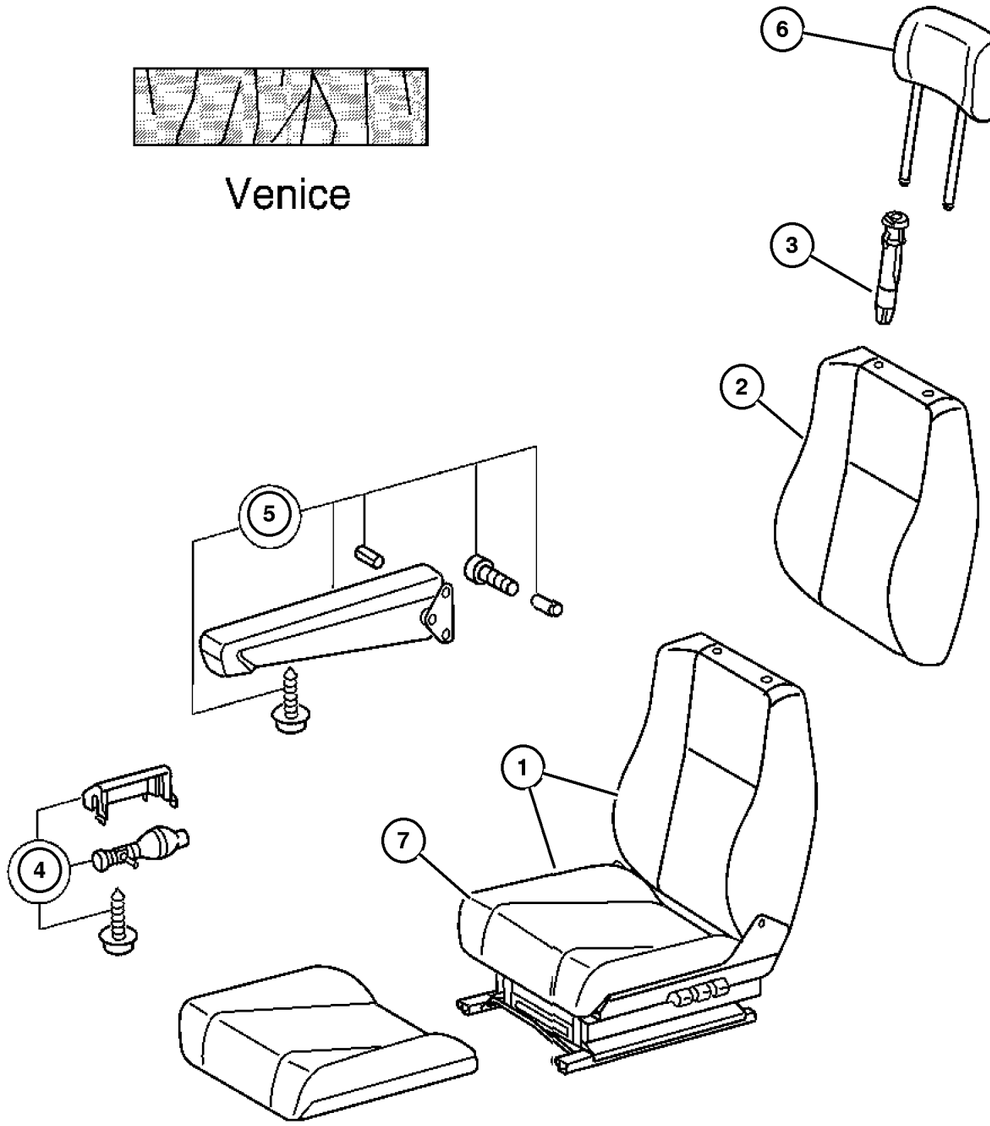

ITEM	PART NUMBER	QTY	LINE	SERIES	BODY	ENGINE	TRANS	TRIM	DESCRIPTION
	5127 114AA	1	2, 6	L	01, 02, 06				Comfort seat, Right
		1	2, 6	L	11, 12, 14, 15, 16				Comfort seat, Right
		1	2, 6	L	51, 52, 54, 55, 56				Comfort seat, Right
		1	3, 7	L	02, 06				Comfort seat, Right
		1	3, 7	L	12, 15, 16				Comfort seat, Right
	5127 113AA	1	2, 6	L	01, 02, 06				Heated Comfort Seat, Left
		1	2, 6	L	11, 12, 14, 15, 16				Heated Comfort Seat, Left
		1	2, 6	L	51, 52, 54, 55, 56				Heated Comfort Seat, Left
		1	3, 7	L	02, 06				Heated Comfort Seat, Left
		1	3, 7	L	12, 15, 16				Heated Comfort Seat, Left
	5127 117AA	1	2, 6	L	01, 02, 06				Heated Comfort Seat, Right
		1	2, 6	L	11, 12, 14, 15, 16				Heated Comfort Seat, Right
		1	2, 6	L	51, 52, 54, 55, 56				Heated Comfort Seat, Right
		1	3, 7	L	02, 06				Heated Comfort Seat, Right
		1	3, 7	L	12, 15, 16				Heated Comfort Seat, Right
2	5170 318AA	1	2, 3, 6, 7				A7		SEAT BACK, Front
3									SLEEVE, Headrest
	1AV08 AA7AA	2	2, 6	L	01, 02, 06		B7		
		2	2, 6	L	11, 12, 14, 15, 16		B7		
		2	2, 6	L	51, 52, 54, 55, 56		B7		
		2	3, 7	L	02, 06		B7		

Refer to Model Legend Information Bookmark

AR = Use as required - = Non illustrated part # = New this model year

March 3, 2006

Front Seat - Venice
Figure IVA-510

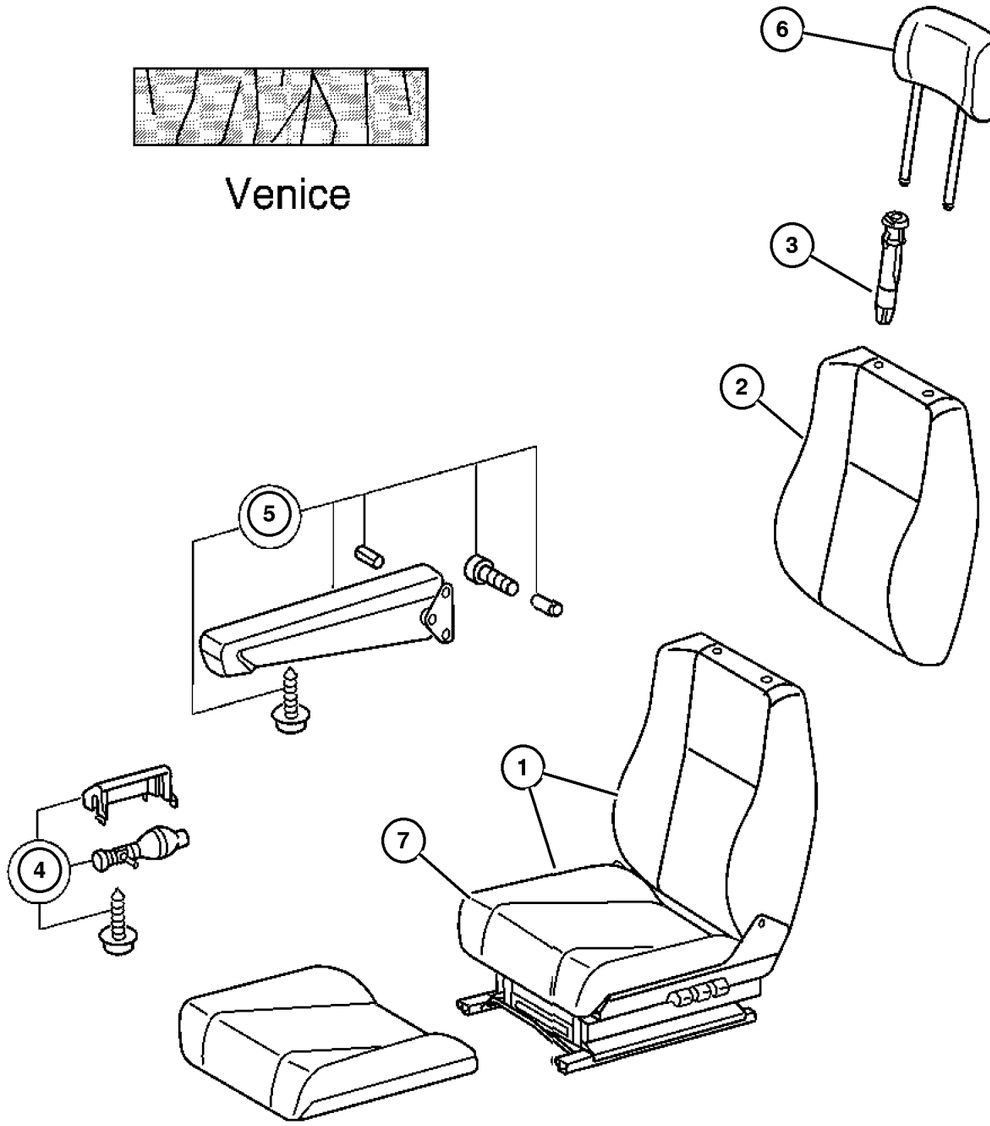

ITEM	PART NUMBER	QTY	LINE	SERIES	BODY	ENGINE	TRANS	TRIM	DESCRIPTION
		2	3, 7	L	12, 15, 16			B7	
4									PUMP, Lumbar Support
	5127 631AA	1	2, 6	L	01, 02, 06				
		1	2, 6	L	11, 12, 14, 15, 16				
		1	2, 6	L	51, 52, 54, 55, 56				
		1	3, 7	L	02, 06				
		1	3, 7	L	12, 15, 16				
5									ARMREST, Seat
	5103 710AA	1	2, 6	L	01, 02, 06				With Mounting Hardware, Left
		1	2, 6	L	11, 12, 14, 15, 16				With Mounting Hardware, Left
		1	2, 6	L	51, 52, 54, 55, 56				With Mounting Hardware, Left
	5103 711AA	1	2, 6	L	01, 02, 06				With Mounting Hardware, Right
		1	2, 6	L	11, 12, 14, 15, 16				With Mounting Hardware, Right
		1	2, 6	L	51, 52, 54, 55, 56				With Mounting Hardware, Right
6									HEADREST
	5125 368AA	3	2, 6	L	11, 12, 14, 15, 16				
		3	3, 7	L	12, 15, 16				
7									SEAT
	5133 015AA	1	2, 6	L	11, 12, 14, 15, 16				Single Seat, Left
		1	2, 6	L	51, 52, 54, 55, 56				Single Seat, Left

Refer to Model Legend Information Bookmark

AR = Use as required - = Non illustrated part # = New this model year

March 3, 2006

« RETURN TO GROUP INDEX

Front Seat - Venice
Figure IVA-510

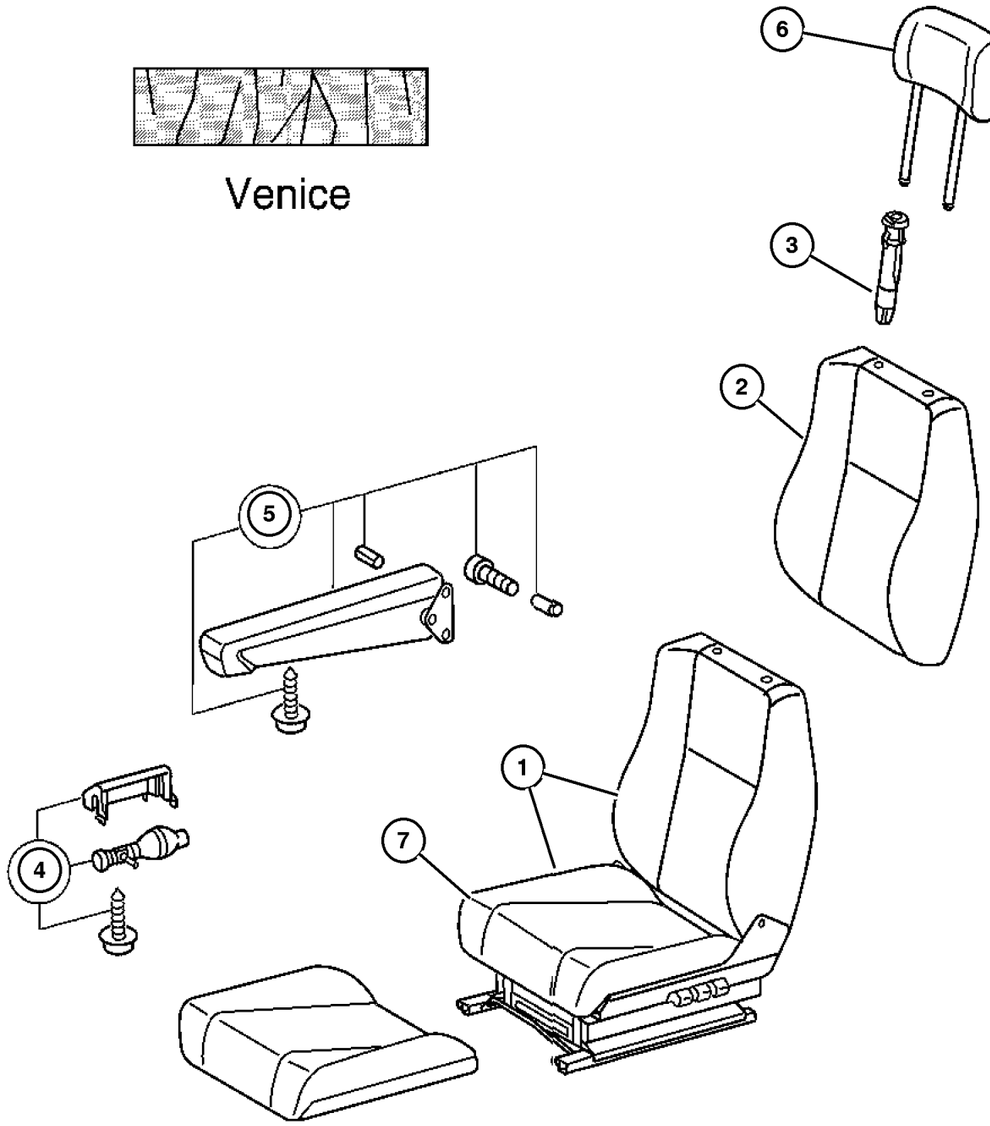

ITEM	PART NUMBER	QTY	LINE	SERIES	BODY	ENGINE	TRANS	TRIM	DESCRIPTION
		1	3, 7	L	12, 15, 16				Single Seat, Left
	5133 020AA	1	2, 6	L	11, 12, 14, 15, 16				Standard Seat Heated, Left
		1	2, 6	L	51, 52, 54, 55, 56				Standard Seat Heated, Left
		1	3, 7	L	12, 15, 16				Standard Seat Heated, Left
	5133 025AA	1	2, 6	L	11, 12, 14, 15, 16				Comfort Seat, Left
		1	2, 6	L	51, 52, 54, 55, 56				Comfort Seat, Left
		1	3, 7	L	12, 15, 16				Comfort Seat, Left
	5133 028AA	1	2, 6	L	11, 12, 14, 15, 16				Comfort Seat-Heated, Left
		1	2, 6	L	51, 52, 54, 55, 56				Comfort Seat-Heated, Left
		1	3, 7	L	12, 15, 16				Comfort Seat-Heated, Left
	5133 029AA	1	2, 6	L	11, 12, 14, 15, 16				Comfort Seat, Right
		1	2, 6	L	51, 52, 54, 55, 56				Comfort Seat, Right
		1	3, 7	L	12, 15, 16				Comfort Seat, Right
	5133 032AA	1	2, 6	L	11, 12, 14, 15, 16				Comfort Seat-Heated, Right
		1	2, 6	L	51, 52, 54, 55, 56				Comfort Seat-Heated, Right
		1	3, 7	L	12, 15, 16				Comfort Seat-Heated, Right

Refer to Model Legend Information Bookmark

Front Seat, Trim Code [B7], Santos
Figure IVA-515

Santos

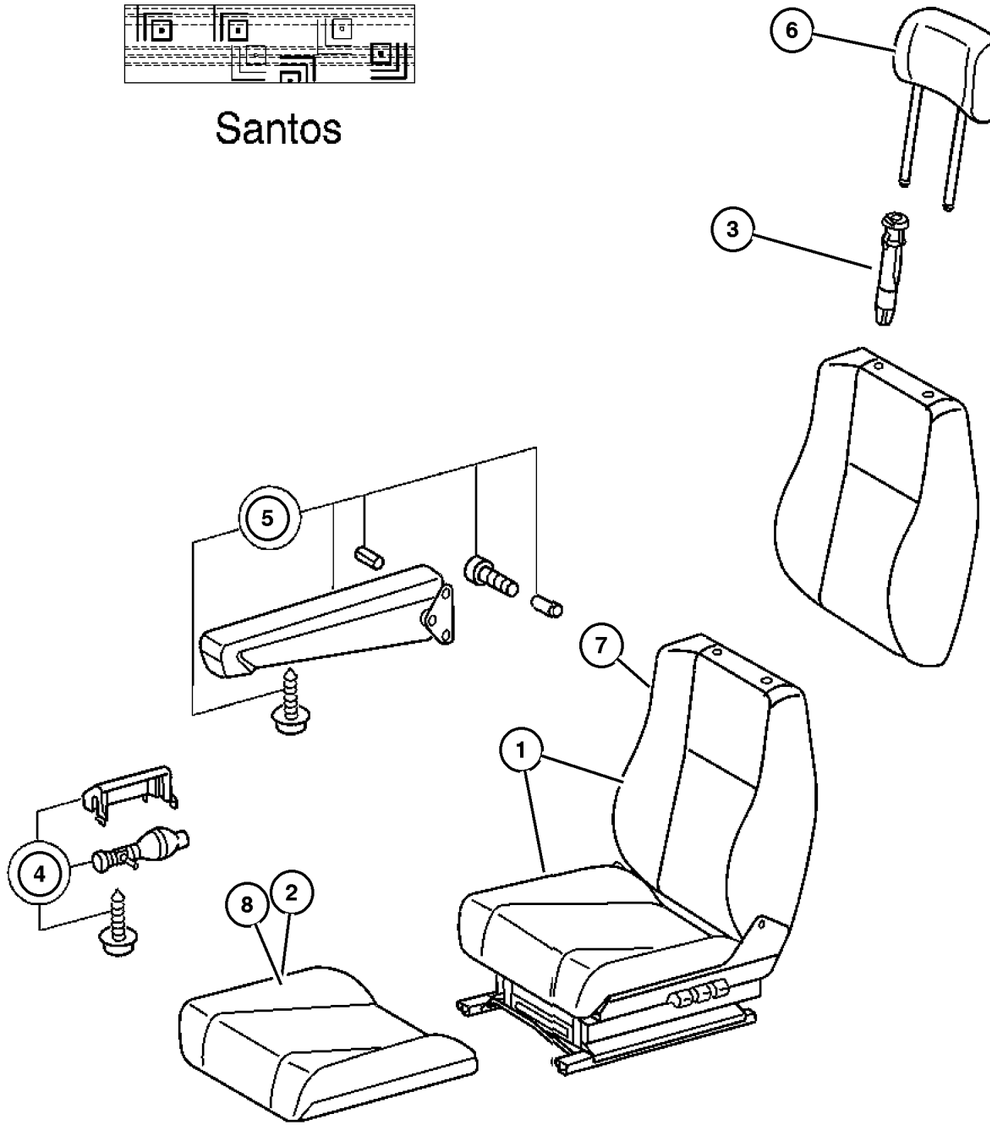

ITEM	PART NUMBER	QTY	LINE	SERIES	BODY	ENGINE	TRANS	TRIM	DESCRIPTION
1									SEAT COMPLETE, Front
	5127 100AA	1	2, 6	L	01, 02, 06				Right
		1	2, 6	L	11, 12, 14, 15, 16				Right
		1	2, 6	L	51, 52, 54, 55, 56				Right
		1	3, 7	L	02, 06				Right
		1	3, 7	L	12, 15, 16				Right
	5127 102AA	1	2, 6	L	01, 02, 06				Left
		1	2, 6	L	11, 12, 14, 15, 16				Left
		1	2, 6	L	51, 52, 54, 55, 56				Left
		1	3, 7	L	02, 06				Left
		1	3, 7	L	12, 15, 16				Left
	5127 105AA	1	2, 6	L	01, 02, 06				Heated, Left
		1	2, 6	L	11, 12, 14, 15, 16				Heated, Left
		1	2, 6	L	51, 52, 54, 55, 56				Heated, Left
		1	3, 7	L	02, 06				Heated, Left
		1	3, 7	L	12, 15, 16				Heated, Left
	5127 110AA	1	2, 6	L	01, 02, 06				Comfort Seat, Left
		1	2, 6	L	11, 12, 14, 15, 16				Comfort Seat, Left
		1	2, 6	L	51, 52, 54, 55, 56				Comfort Seat, Left
		1	3, 7	L	02, 06				Comfort Seat, Left
		1	3, 7	L	12, 15, 16				Comfort Seat, Left

Refer to Model Legend Information Bookmark

Front Seat, Trim Code [B7], Santos
Figure IVA-515

Santos

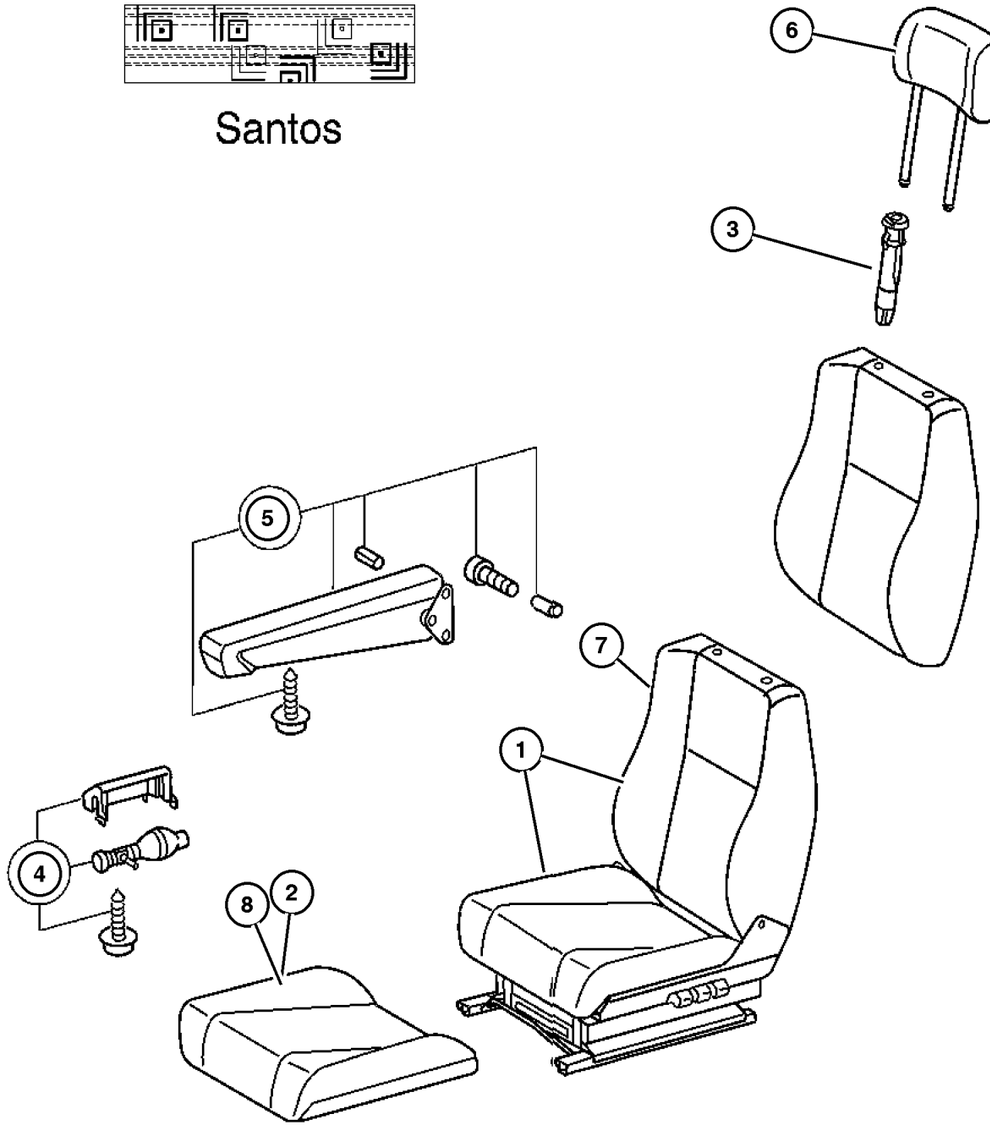

ITEM	PART NUMBER	QTY	LINE	SERIES	BODY	ENGINE	TRANS	TRIM	DESCRIPTION
	5127 114AA	1	2, 6	L	01, 02, 06				Comfort Seat, Right
		1	2, 6	L	11, 12, 14, 15, 16				Comfort Seat, Right
		1	2, 6	L	51, 52, 54, 55, 56				Comfort Seat, Right
		1	3, 7	L	02, 06				Comfort Seat, Right
		1	3, 7	L	12, 15, 16				Comfort Seat, Right
2									CUSHION, Front Seat
	5133 233AA	1	2, 6	L	01, 02, 06				
		1	2, 6	L	11, 12, 14, 15, 16				
		1	2, 6	L	51, 52, 54, 55, 56				
		1	3, 7	L	02, 06				
		1	3, 7	L	12, 15, 16				
	5133 235AA	1	2, 6	L	01, 02, 06				Canada
		1	2, 6	L	11, 12, 14, 15, 16				Canada
		1	2, 6	L	51, 52, 54, 55, 56				Canada
		1	3, 7	L	02, 06				Canada
		1	3, 7	L	12, 15, 16				Canada
3									SLEEVE, Headrest
	1AV08 AA7AA	2	2, 6	L	01, 02, 06			B7	
		2	2, 6	L	11, 12, 14, 15, 16			B7	
		2	2, 6	L	51, 52, 54, 55, 56			B7	
		2	3, 7	L	02, 06			B7	

Refer to Model Legend Information Bookmark

Front Seat, Trim Code [B7], Santos
Figure IVA-515

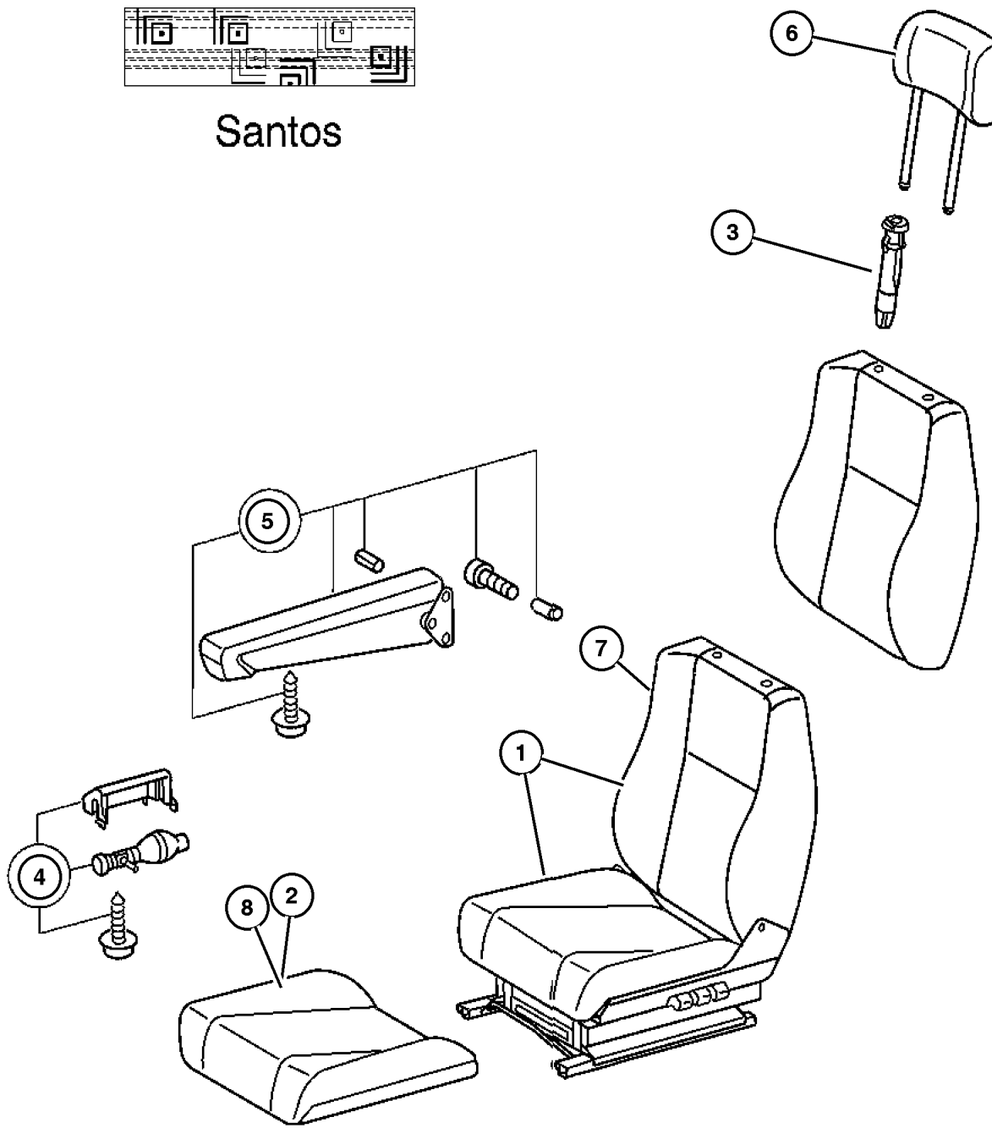

ITEM	PART NUMBER	QTY	LINE	SERIES	BODY	ENGINE	TRANS	TRIM	DESCRIPTION
		2	3, 7	L	12, 15, 16			B7	
4									PUMP, Lumbar Support
	5127 631AA	1	2, 6	L	01, 02, 06				
		1	2, 6	L	11, 12, 14, 15, 16				
		1	2, 6	L	51, 52, 54, 55, 56				
		1	3, 7	L	02, 06				
		1	3, 7	L	12, 15, 16				
5									ARMREST, Seat
	5103 710AA	1	2, 6	L	01, 02, 06				With Mounting Hardware, Left
		1	2, 6	L	11, 12, 14, 15, 16				With Mounting Hardware, Left
		1	2, 6	L	51, 52, 54, 55, 56				With Mounting Hardware, Left
		1	3, 7	L	02, 06				
		1	3, 7	L	12, 15, 16				
	5103 711AA	1	2, 6	L	01, 02, 06				With Mounting Hardware, Right
		1	2, 6	L	11, 12, 14, 15, 16				With Mounting Hardware, Right
		1	2, 6	L	51, 52, 54, 55, 56				With Mounting Hardware, Right
		1	3, 7	L	02, 06				
		1	3, 7	L	12, 15, 16				
6									HEADREST
	5125 377AA	1	2, 6	L	01, 02, 06				
		1	2, 6	L	11, 12, 14, 15, 16				
		1	2, 6	L	51, 52, 54, 55, 56				
		1	3, 7	L	02, 06				
		1	3, 7	L	12, 15, 16				
7									BACK, Front Seat

Refer to Model Legend Information Bookmark

Front Seat, Trim Code [B7], Santos
Figure IVA-515

Santos

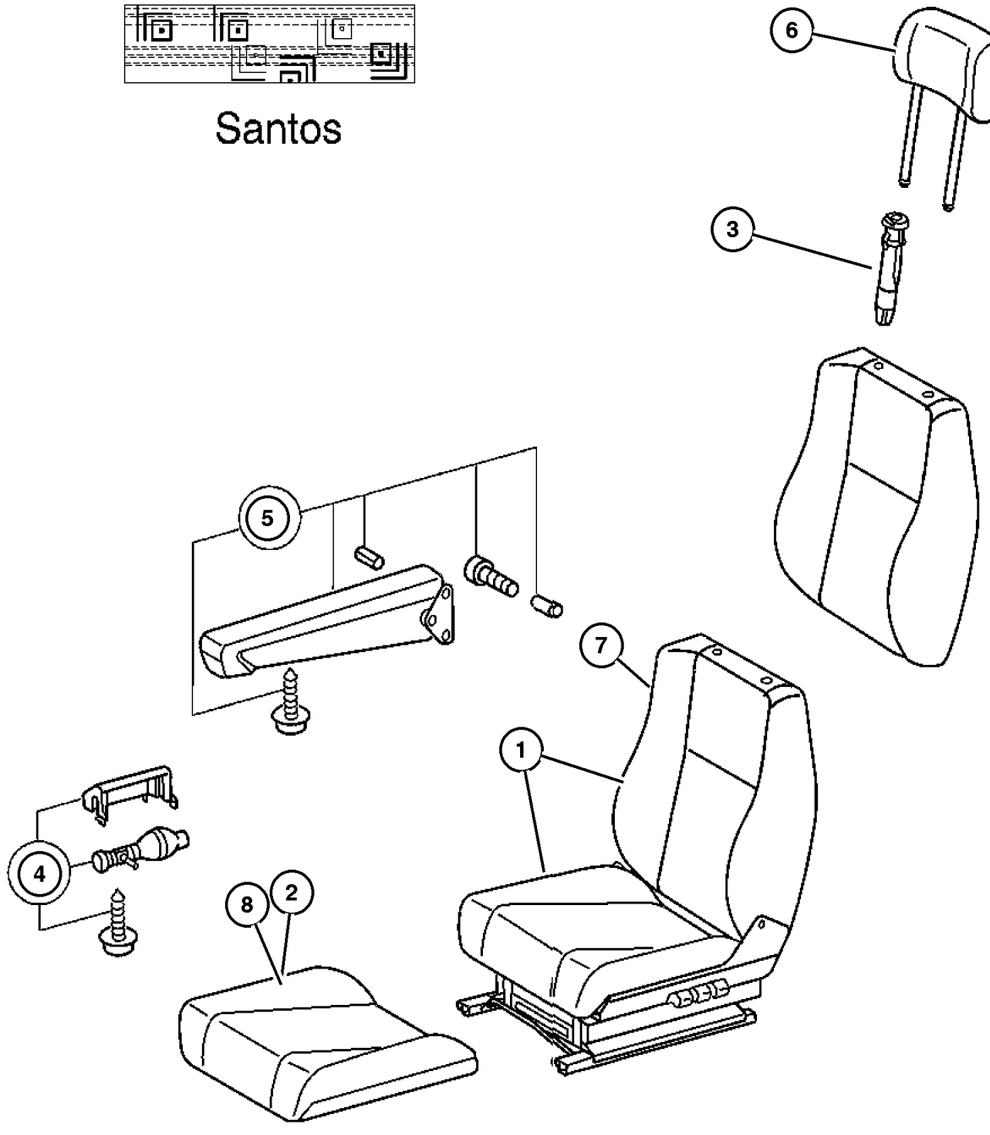

ITEM	PART NUMBER	QTY	LINE	SERIES	BODY	ENGINE	TRANS	TRIM	DESCRIPTION
	5133 276AA	1	2, 6	L	01, 02, 06				Right
		1	2, 6	L	11, 12, 14, 15, 16				Right
		1	2, 6	L	51, 52, 54, 55, 56				Right
		1	3, 7	L	02, 06				Right
		1	3, 7	L	12, 15, 16				Right
8									CUSHION, Front Seat, Passenger
	5133 244AA	1	2, 6	L	01, 02, 06				
		1	2, 6	L	11, 12, 14, 15, 16				
		1	2, 6	L	51, 52, 54, 55, 56				
		1	3, 7	L	02, 06				
		1	3, 7	L	12, 15, 16				

Refer to Model Legend Information Bookmark

AR = Use as required - = Non illustrated part # = New this model year

March 3, 2006

« RETURN TO GROUP INDEX

«

Front Seat - Catano
Figure IVA-520

Catano

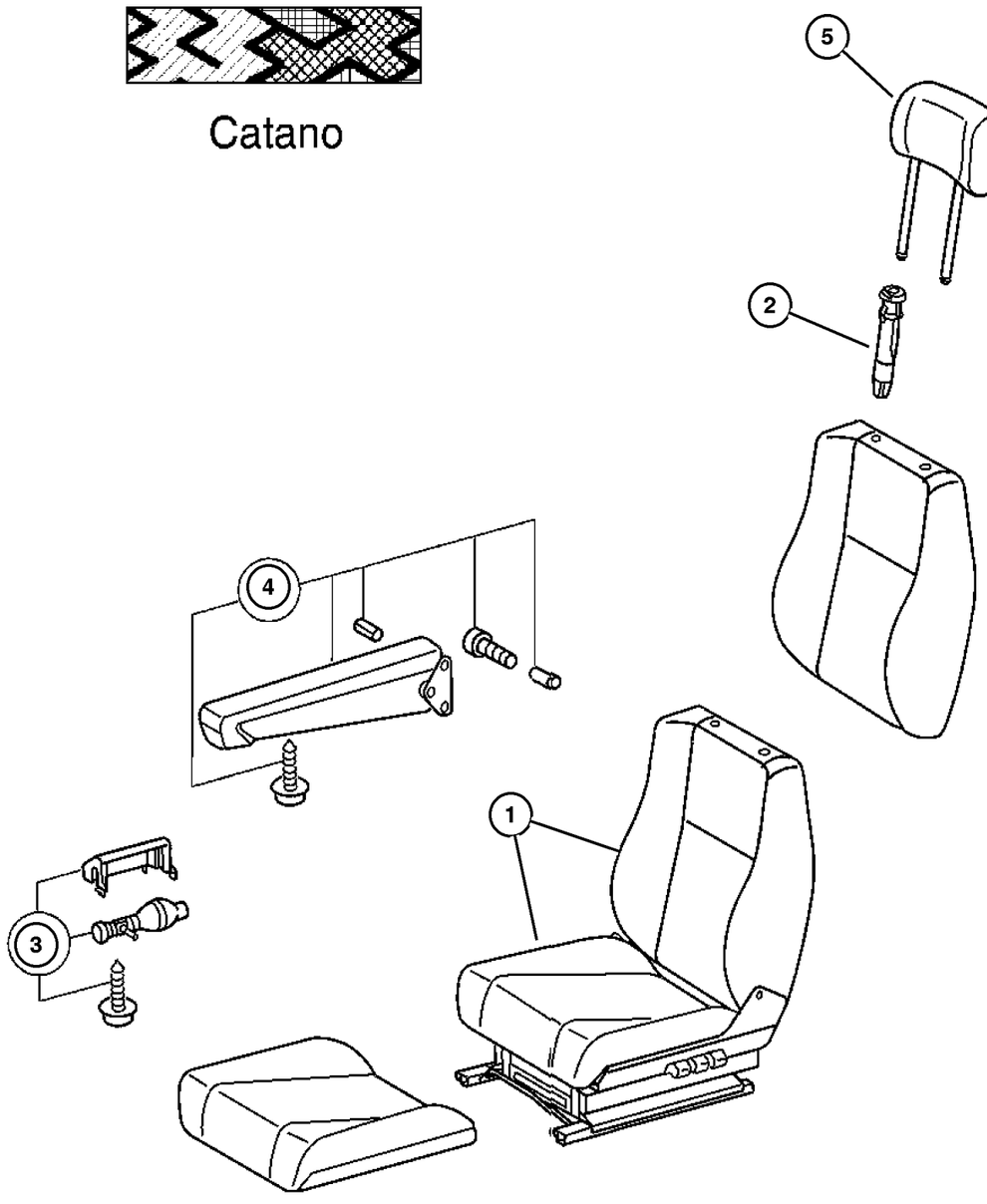

ITEM	PART NUMBER	QTY	LINE	SERIES	BODY	ENGINE	TRANS	TRIM	DESCRIPTION
1									SEAT COMPLETE, Front
	5126 994AA	1	2, 6	L	01, 02, 06			C7	
		1	2, 6	L	11, 12, 14, 15, 16			C7	
		1	2, 6	L	51, 52, 54, 55, 56			C7	
		1	3, 7	L	02, 06			C7	
		1	3, 7	L	12, 15, 16			C7	
2									SLEEVE, Headrest
	1AV08 AA7AA	2	2, 6	L	01, 02, 06			B7	
		2	2, 6	L	11, 12, 14, 15, 16			B7	
		2	2, 6	L	51, 52, 54, 55, 56			C7	
		2	3, 7	L	02, 06			B7	
		2	3, 7	L	12, 15, 16			B7	
3									PUMP, Lumbar Support
	5127 631AA	1	2, 6	L	01, 02, 06				
		1	2, 6	L	11, 12, 14, 15, 16				
		1	2, 6	L	51, 52, 54, 55, 56				
		1	3, 7	L	02, 06				
		1	3, 7	L	12, 15, 16				
4									ARMREST, Seat
	5103 710AA	1	2, 6	L	01, 02, 06				Left
		1	2, 6	L	11, 12, 14, 15, 16				Left
		1	2, 6	L	51, 52, 54, 55, 56				Left

Refer to Model Legend Information Bookmark

AR = Use as required - = Non illustrated part # = New this model year

March 3, 2006

« RETURN TO GROUP INDEX

»

Front Seat - Catano
Figure IVA-520

Catano

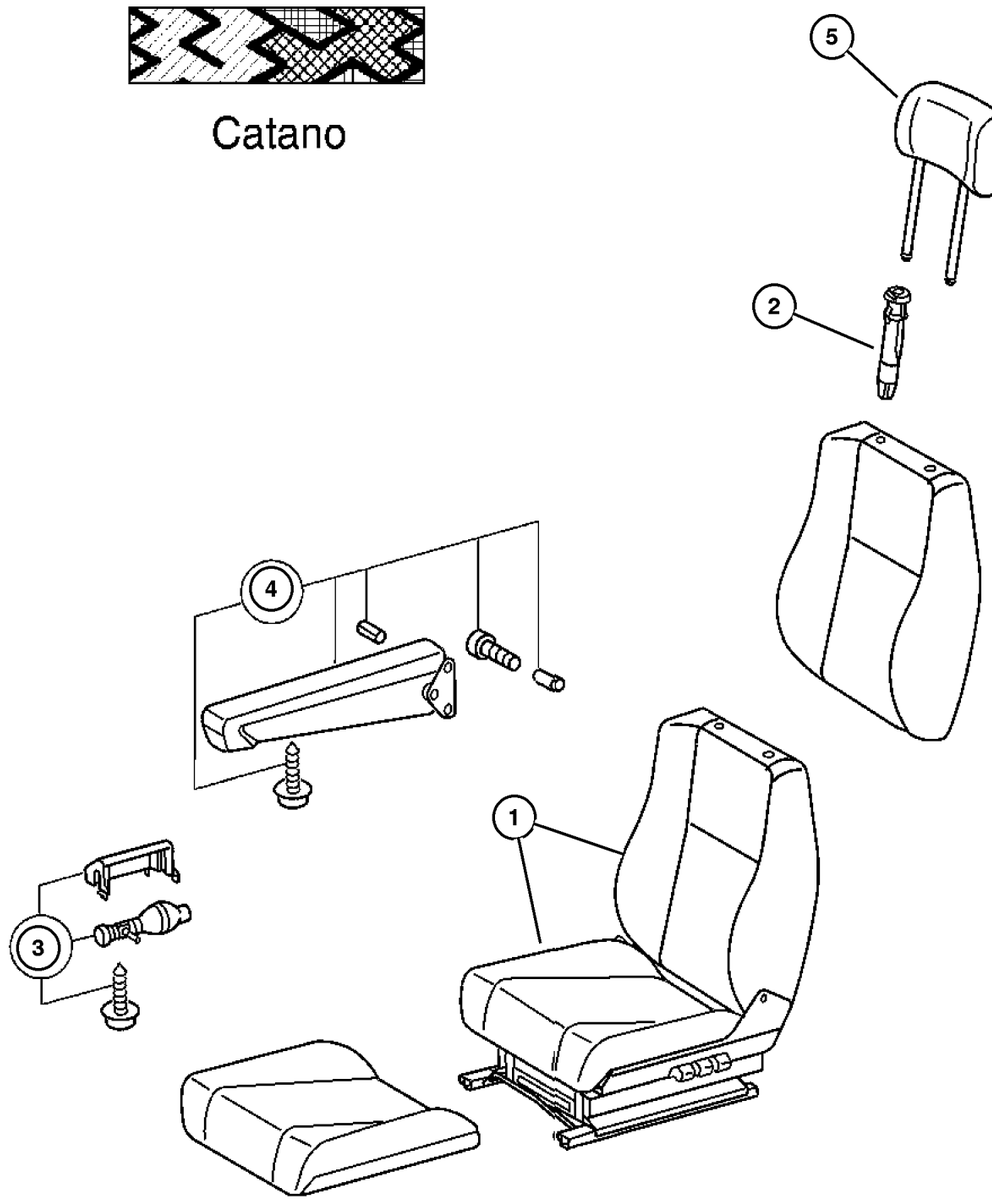

ITEM	PART NUMBER	QTY	LINE	SERIES	BODY	ENGINE	TRANS	TRIM	DESCRIPTION
	5103 711AA	1	2, 6	L	01, 02, 06				Right
		1	2, 6	L	11, 12, 14, 15, 16				Right
		1	2, 6	L	51, 52, 54, 55, 56				Right
5									HEADREST
	5104 534AA	3	2, 6	L	11, 12, 14, 15, 16				Catano
		3	3, 7	L	12, 15, 16				Catano

Refer to Model Legend Information Bookmark

AR = Use as required - = Non illustrated part # = New this model year

March 3, 2006

« RETURN TO GROUP INDEX

Front Seat - Attaching Parts
Figure IVA-525

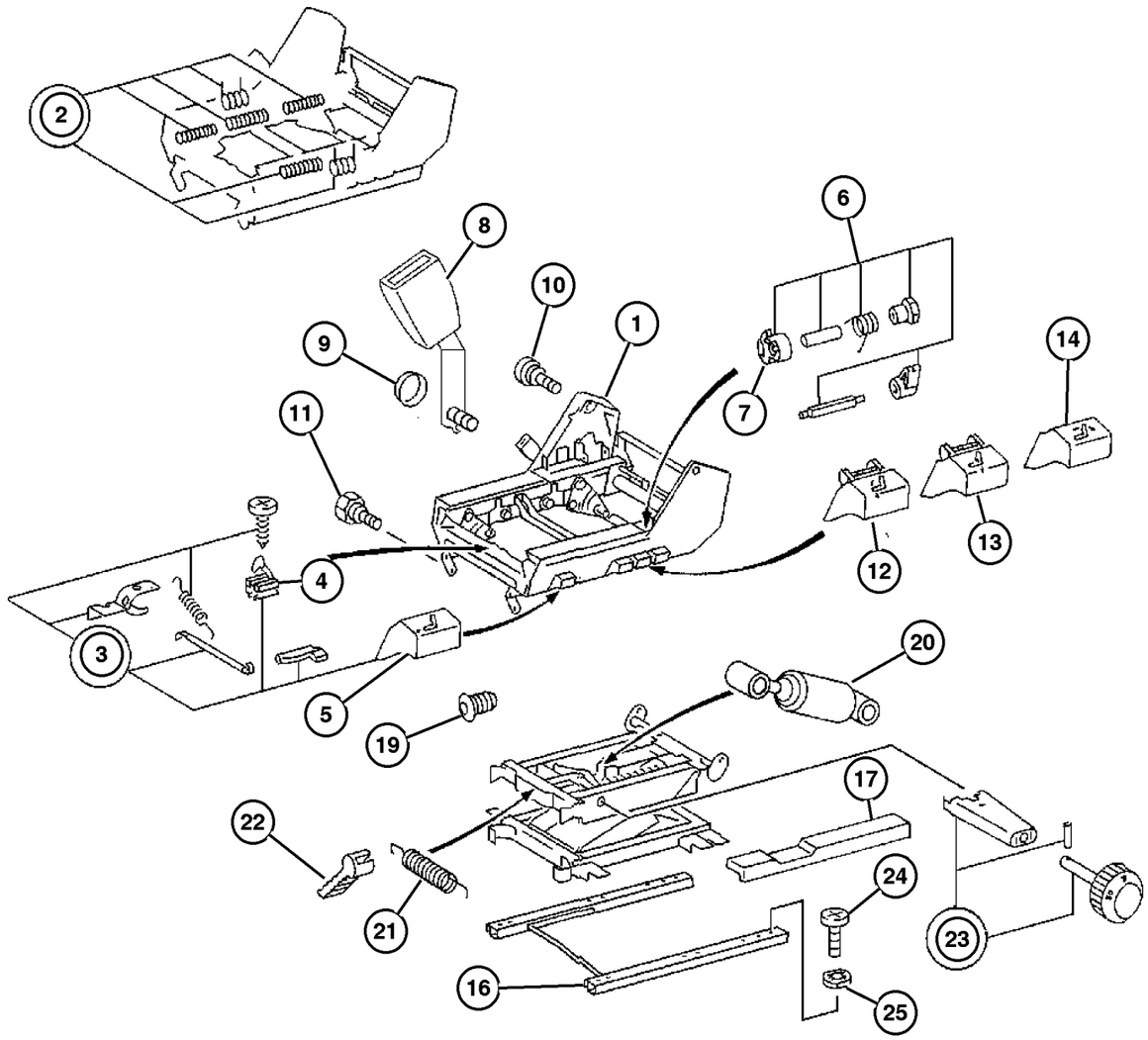

ITEM	PART NUMBER	QTY	LINE	SERIES	BODY	ENGINE	TRANS	TRIM	DESCRIPTION
1									ADJUSTER, seat
	5103 703AA	1	2, 6	L	01, 02, 06				Driver
		1	2, 6	L	11, 12, 14, 15, 16				Driver
		1	2, 6	L	51, 52, 54, 55, 56				Driver
		1	3, 7	L	02, 06				Driver
		1	3, 7	L	12, 15, 16				Driver
	5133 211AA	1	2, 6	L	01, 02, 06				[CDD], Luxury Bucket, Driver
		1	2, 6	L	11, 12, 14, 15, 16				[CDD], Luxury Bucket, Driver
		1	2, 6	L	51, 52, 54, 55, 56				[CDD], Luxury Bucket, Driver
		1	3, 7	L	02, 06				[CDD], Luxury Bucket, Driver
		1	3, 7	L	12, 15, 16				[CDD], Luxury Bucket, Driver
	5133 264AA	1	2, 6	L	01, 02, 06				[CDY], Luxury Bucket, Passenger
		1	2, 6	L	11, 12, 14, 15, 16				[CDY], Luxury Bucket, Passenger
		1	2, 6	L	51, 52, 54, 55, 56				[CDY], Luxury Bucket, Passenger
		1	3, 7	L	02, 06				[CDY], Luxury Bucket, Passenger
		1	3, 7	L	12, 15, 16				[CDY], Luxury Bucket, Passenger
	5133 266AA	1	2, 6	L	01, 02, 06				
		1	2, 6	L	11, 12, 14, 15, 16				
		1	2, 6	L	51, 52, 54, 55, 56				
		1	3, 7	L	02, 06				
		1	3, 7	L	12, 15, 16				
2									SPRING, Seat Track Adjuster

Refer to Model Legend Information Bookmark

AR = Use as required - = Non illustrated part # = New this model year

March 3, 2006

« RETURN TO GROUP INDEX

»

Front Seat - Attaching Parts
Figure IVA-525

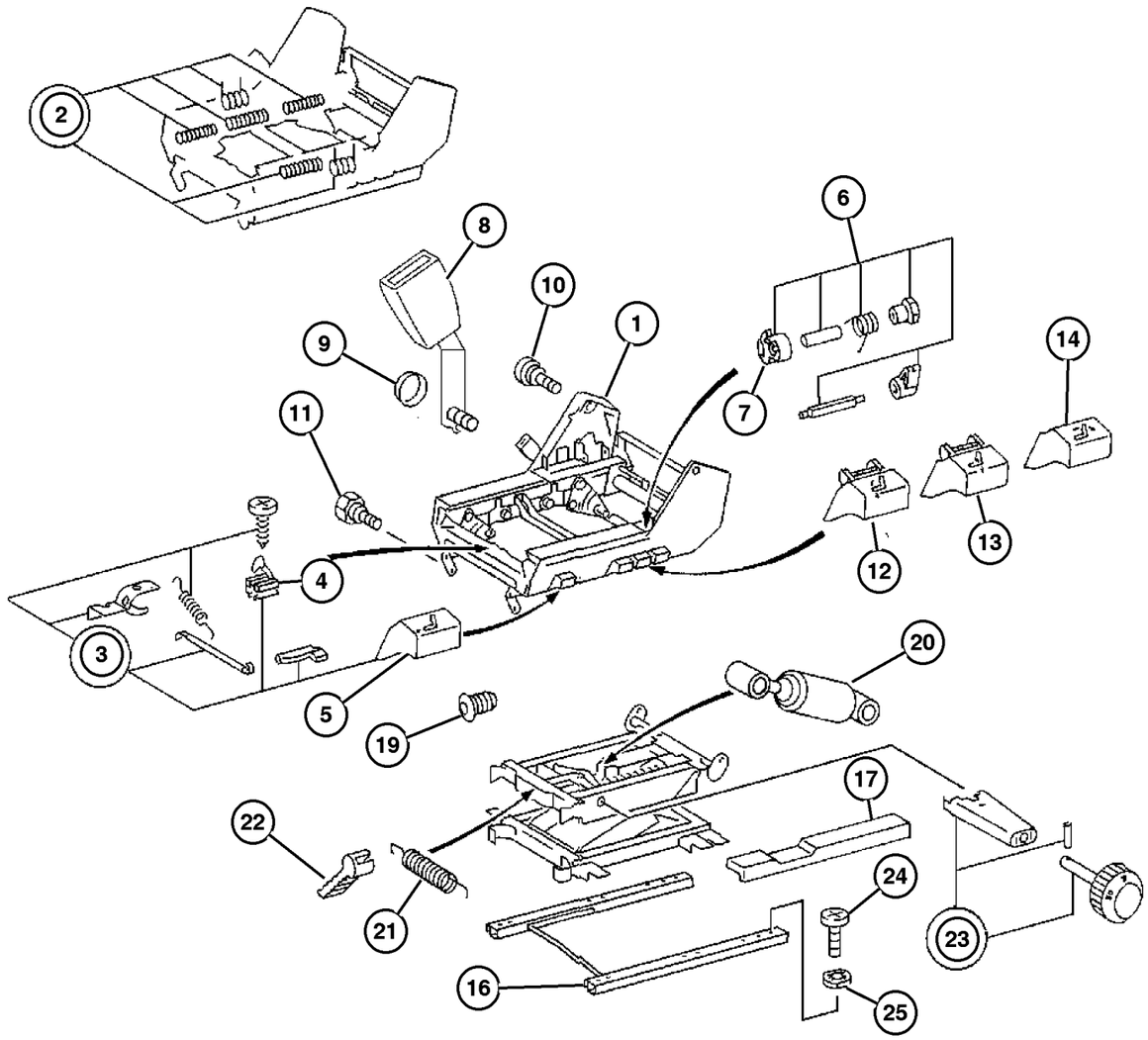

ITEM	PART NUMBER	QTY	LINE	SERIES	BODY	ENGINE	TRANS	TRIM	DESCRIPTION
	5133 214AA	1	2, 6	L	01, 02, 06				
		1	2, 6	L	11, 12, 14, 15, 16				
		1	2, 6	L	51, 52, 54, 55, 56				
		1	3, 7	L	02, 06				
		1	3, 7	L	12, 15, 16				
3									HANDLE, Seat Adjuster
	5133 216AA	1	2, 6	L	01, 02, 06				Seat Cushion Depth, Driver Side
		1	2, 6	L	11, 12, 14, 15, 16				Seat Cushion Depth, Driver Side
		1	2, 6	L	51, 52, 54, 55, 56				Seat Cushion Depth, Driver Side
		1	3, 7	L	02, 06				Seat Cushion Depth, Driver Side
		1	3, 7	L	12, 15, 16				Seat Cushion Depth, Driver Side
4									LOCK, Adjuster
	5133 215AA	1	2, 6	L	01, 02, 06				
		1	2, 6	L	11, 12, 14, 15, 16				
		1	2, 6	L	51, 52, 54, 55, 56				
		1	3, 7	L	02, 06				
		1	3, 7	L	12, 15, 16				
5									HANDLE, Seat Adjuster
	5133 216AA	1	2, 6	L	01, 02, 06				Driver Side
		1	2, 6	L	11, 12, 14, 15, 16				
		1	2, 6	L	51, 52, 54, 55, 56				

Refer to Model Legend Information Bookmark

AR = Use as required - = Non illustrated part # = New this model year

March 3, 2006

« RETURN TO GROUP INDEX

Front Seat - Attaching Parts
Figure IVA-525

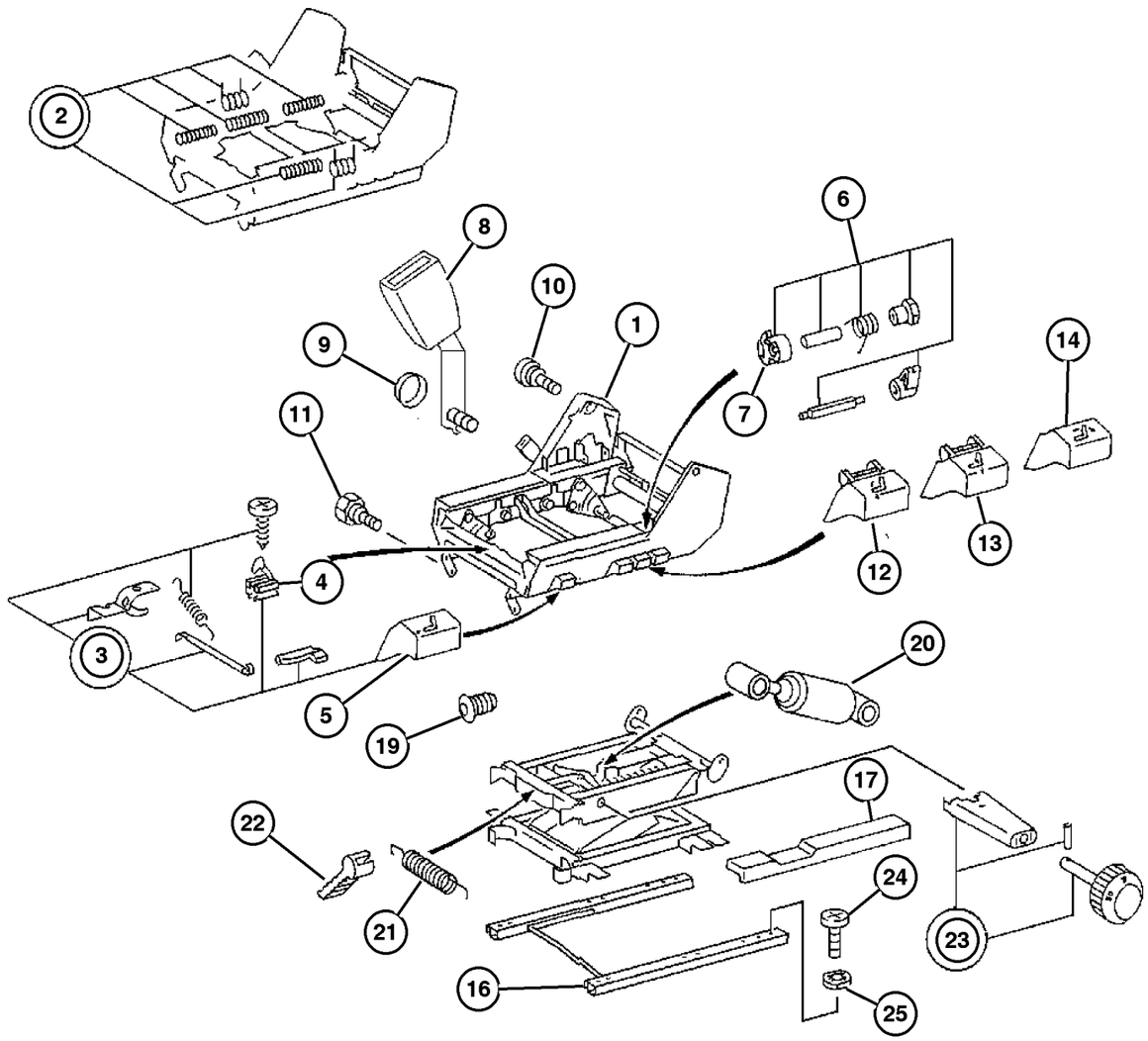

ITEM	PART NUMBER	QTY	LINE	SERIES	BODY	ENGINE	TRANS	TRIM	DESCRIPTION
	5133 267AA	1	2, 6	L	01, 02, 06				Passenger Side
		1	2, 6	L	11, 12, 14, 15, 16				Passenger Side
		1	2, 6	L	51, 52, 54, 55, 56				Passenger Side
6									HARDWARE KIT
	5133 217AA	1	2, 6	L	01, 02, 06				
		1	2, 6	L	11, 12, 14, 15, 16				
		1	2, 6	L	51, 52, 54, 55, 56				
		1	3, 7	L	02, 06				
		1	3, 7	L	12, 15, 16				
7									LOCK, Adjuster
	5133 269AA	1	2, 6	L	01, 02, 06				
		1	2, 6	L	11, 12, 14, 15, 16				
		1	2, 6	L	51, 52, 54, 55, 56				
		1	3, 7	L	02, 06				
		1	3, 7	L	12, 15, 16				
8									SEAT BELT, Front, For Part Numbers See Ill 710, (NOT REQUIRED)
9									CAP, Screw Cover
	5125 999AA	2	2, 6	L	01, 02, 06				
		2	2, 6	L	11, 12, 14, 15, 16				
		2	2, 6	L	51, 52, 54, 55, 56				

Refer to Model Legend Information Bookmark

Front Seat - Attaching Parts
Figure IVA-525

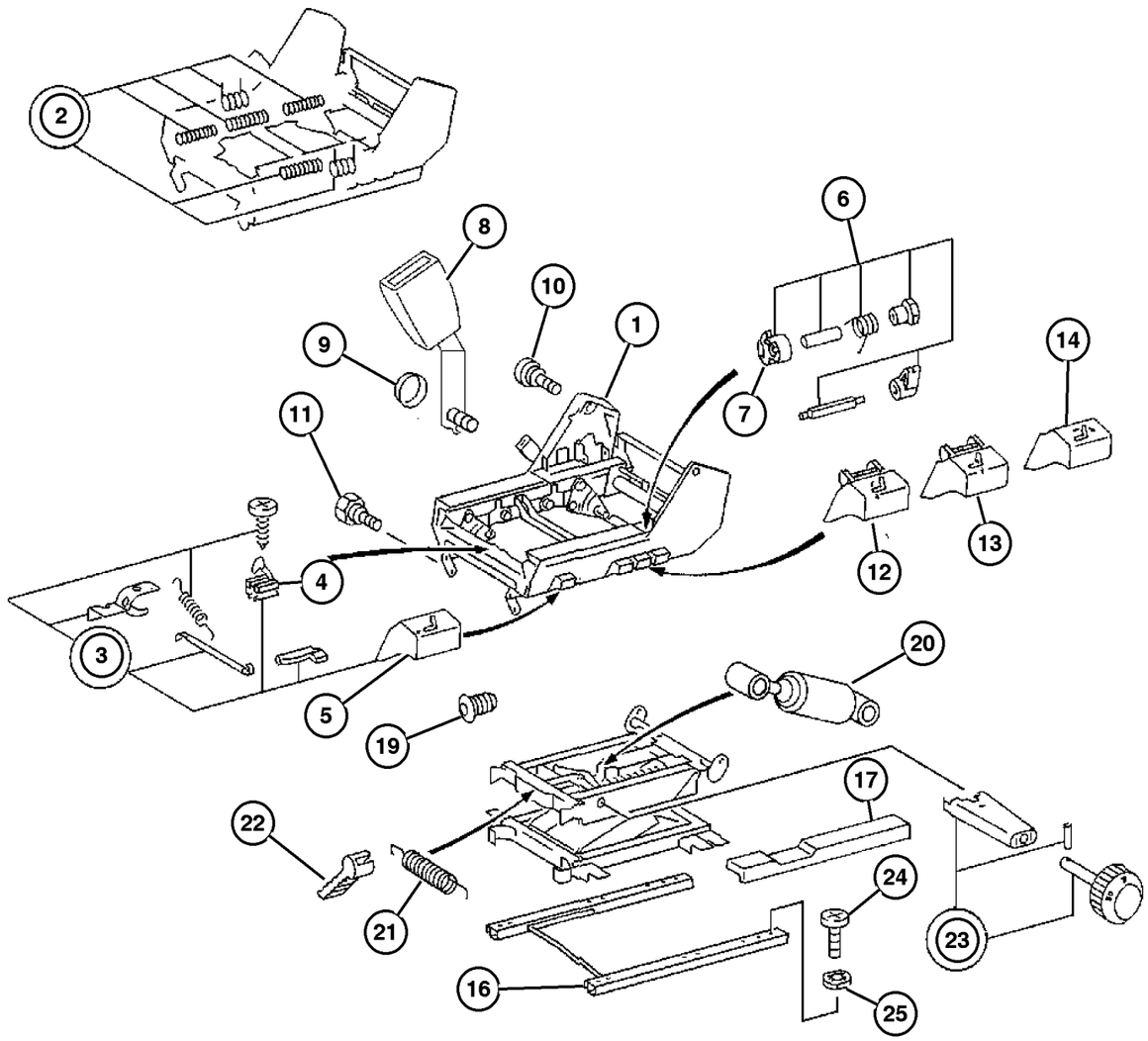

ITEM	PART NUMBER	QTY	LINE	SERIES	BODY	ENGINE	TRANS	TRIM	DESCRIPTION
		2	3, 7	L	12, 15, 16				
10									BOLT, Pivot
	5133 219AA	2	2, 6	L	01, 02, 06				
		2	2, 6	L	11, 12, 14, 15, 16				
		2	2, 6	L	51, 52, 54, 55, 56				
		2	3, 7	L	02, 06				
		2	3, 7	L	12, 15, 16				
11									BOLT, Seat
	5133 220AA	2	2, 6	L	01, 02, 06				
		2	2, 6	L	11, 12, 14, 15, 16				
		2	2, 6	L	51, 52, 54, 55, 56				
		2	3, 7	L	02, 06				
		2	3, 7	L	12, 15, 16				
12									HANDLE, Seat Adjuster
	ZN45 TE4AA	1	2, 6	L	01, 02, 06		B7		Raises Front of Cushion, Driver Side
		1	2, 6	L	11, 12, 14, 15, 16		B7		Raises Front of Cushion, Driver Side
		1	2, 6	L	51, 52, 54, 55, 56		B7		Raises Front of Cushion, Driver Side
		1	3, 7	L	02, 06		B7		Raises Front of Cushion, Driver Side
		1	3, 7	L	12, 15, 16		B7		Raises Front of Cushion, Driver Side
	ZN49 TE4AA	1	2, 6	L	01, 02, 06		B7		Raises Front of Cushion, Passenger
		1	2, 6	L	11, 12, 14, 15, 16		B7		Raises Front of Cushion, Passenger
		1	3, 7	L	02, 06		B7		Raises Front of Cushion, Passenger

Refer to Model Legend Information Bookmark

AR = Use as required - = Non illustrated part # = New this model year

March 3, 2006

Front Seat - Attaching Parts
Figure IVA-525

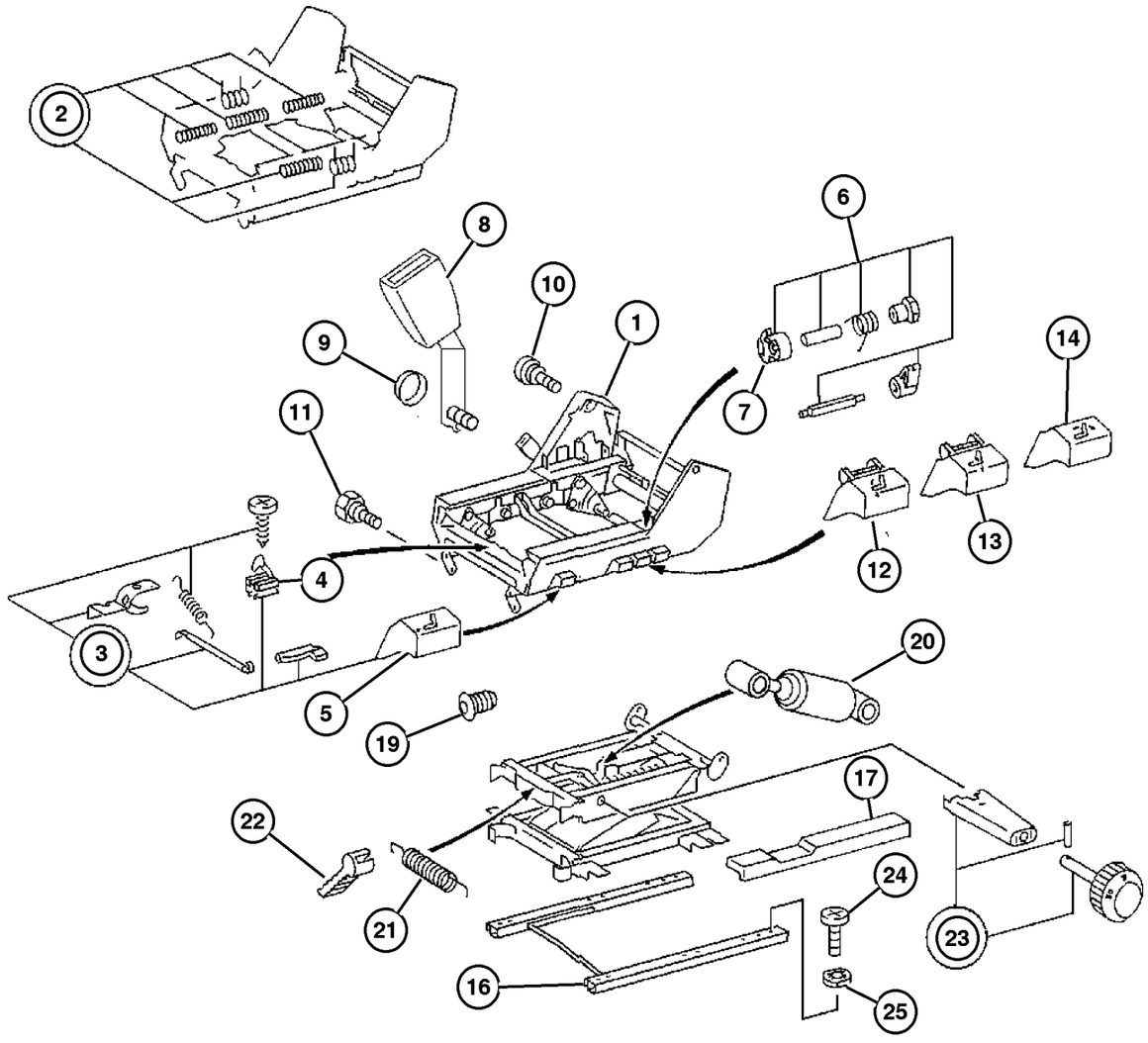

ITEM	PART NUMBER	QTY	LINE	SERIES	BODY	ENGINE	TRANS	TRIM	DESCRIPTION
		1	3, 7	L	12, 15, 16			B7	Raises Front of Cushion, Passenger
		1	2, 6	L	51, 52, 54, 55, 56			B7	Raises Front of Cushion, Passenger
	5133 216AA	1	2, 6	L	01, 02, 06				Seat Cushion Depth, Driver Side
		1	2, 6	L	11, 12, 14, 15, 16				Seat Cushion Depth, Driver Side
		1	3, 7	L	02, 06				Seat Cushion Depth, Driver Side
		1	3, 7	L	12, 15, 16				Seat Cushion Depth, Driver Side
		1	2, 6	L	51, 52, 54, 55, 56				Seat Cushion Depth, Driver Side
	ZN50 TE4AA	1	2, 6	L	01, 02, 06			B7	Raises Rear of Cushion, Passenger Side
		1	2, 6	L	11, 12, 14, 15, 16			B7	Raises Rear of Cushion, Passenger Side
		1	2, 6	L	51, 52, 54, 55, 56			B7	Raises Rear of Cushion, Passenger Side
		1	3, 7	L	02, 06			B7	Raises Rear of Cushion, Passenger Side
		1	3, 7	L	12, 15, 16			B7	Raises Rear of Cushion, Passenger Side
13									HANDLE, Seat Adjuster
	5133 283AA	1	3, 7	L	12, 15, 16				Adjuster, Front Cushion
	ZN46 TE4AA	1	2, 6	L	01, 02, 06			B7	Raises Rear of Cushion
		1	2, 6	L	11, 12, 14, 15, 16			B7	Raises Rear of Cushion
		1	2, 6	L	51, 52, 54, 55, 56			B7	Raises Rear of Cushion
		1	3, 7	L	02, 06			B7	Raises Rear of Cushion
		1	3, 7	L	12, 15, 16			B7	Raises Rear of Cushion, Drivers Side
	ZN50 TE4AA	1	2, 6	L	01, 02, 06			B7	Raises Rear of Cushion, Passenger Side

Refer to Model Legend Information Bookmark

Front Seat - Attaching Parts
Figure IVA-525

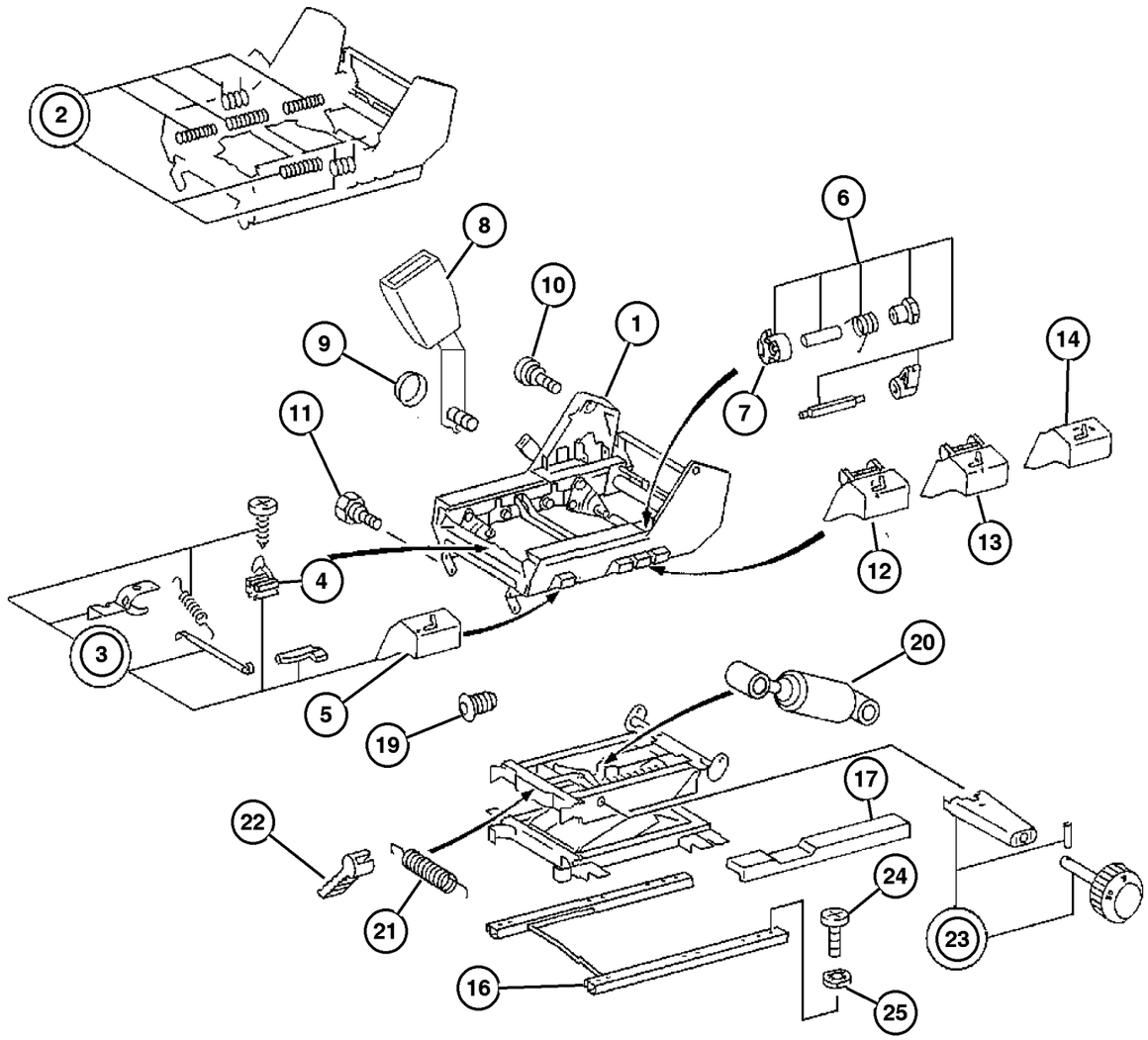

ITEM	PART NUMBER	QTY	LINE	SERIES	BODY	ENGINE	TRANS	TRIM	DESCRIPTION
		1	2, 6	L	11, 12, 14, 15, 16			B7	Raises Rear of Cushion, Passenger Side
		1	2, 6	L	51, 52, 54, 55, 56			B7	Raises Rear of Cushion, Passenger Side
		1	3, 7	L	02, 06			B7	Raises Rear of Cushion, Passenger Side
		1	3, 7	L	12, 15, 16			B7	Raises Rear of Cushion, Passenger Side
14	ZN51 TE4AA	1	2, 6	L	01, 02, 06			B7	HANDLE, Seat Recliner Passenger Side
		1	2, 6	L	11, 12, 14, 15, 16			B7	Passenger Side
		1	2, 6	L	51, 52, 54, 55, 56			B7	Passenger Side
		1	3, 7	L	02, 06			B7	Passenger Side
		1	3, 7	L	12, 15, 16			B7	Passenger Side
-15	5103 778AA-	1	2, 6	L	01, 02, 06				HANDLE, Recliner
		1	2, 6	L	11, 12, 14, 15, 16				
		1	2, 6	L	51, 52, 54, 55, 56				
		1	3, 7	L	02, 06				
		1	3, 7	L	12, 15, 16				
16	5103 702AA	1	2, 6	L	01, 02, 06				TRACK, Seat Adjuster
		1	2, 6	L	11, 12, 14, 15, 16				
		1	2, 6	L	51, 52, 54, 55, 56				
		1	3, 7	L	02, 06				

Refer to Model Legend Information Bookmark

AR = Use as required - = Non illustrated part # = New this model year

March 3, 2006

Front Seat - Attaching Parts
Figure IVA-525

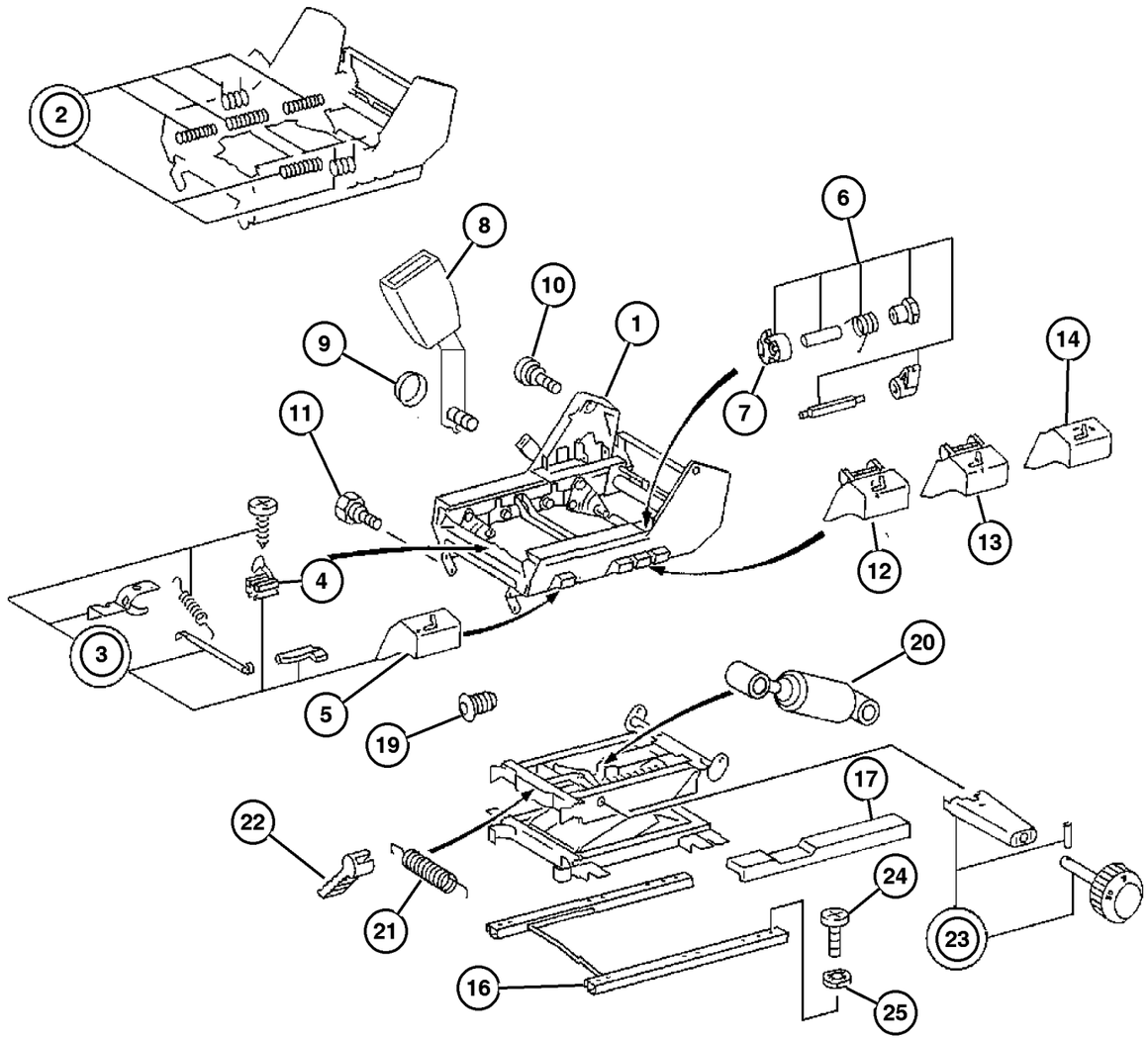

ITEM	PART NUMBER	QTY	LINE	SERIES	BODY	ENGINE	TRANS	TRIM	DESCRIPTION
		1	3, 7	L	12, 15, 16				
17									COVER, Seat Adjuster
	5133 224AA	1	2, 6	L	01, 02, 06				
		1	2, 6	L	11, 12, 14, 15, 16				
		1	2, 6	L	51, 52, 54, 55, 56				
		1	3, 7	L	02, 06				
		1	3, 7	L	12, 15, 16				
-18									SHIELD, Seat Adjuster
	5133 222AA-	1	2, 6	L	01, 02, 06				
		1	2, 6	L	11, 12, 14, 15, 16				
		1	2, 6	L	51, 52, 54, 55, 56				
		1	3, 7	L	02, 06				
		1	3, 7	L	12, 15, 16				
19									PLUG, (NOT SERVICED) (Not Serviced)
20									ABSORBER
	5133 483AA	1	2, 6	L	01, 02, 06				Seat Suspension
		1	2, 6	L	11, 12, 14, 15, 16				Seat Suspension
		1	2, 6	L	51, 52, 54, 55, 56				Seat Suspension
		1	3, 7	L	02, 06				Seat Suspension
		1	3, 7	L	12, 15, 16				Seat Suspension
21									SPRING, (NOT SERVICED) (Not Serviced)
22									LEVER, (NOT SERVICED) (Not Serviced)
23									WHEEL, Hand, (NOT SERVICED) (Not Serviced)

Refer to Model Legend Information Bookmark

AR = Use as required - = Non illustrated part # = New this model year

March 3, 2006

« RETURN TO GROUP INDEX

« »

Front Seat - Attaching Parts
Figure IVA-525

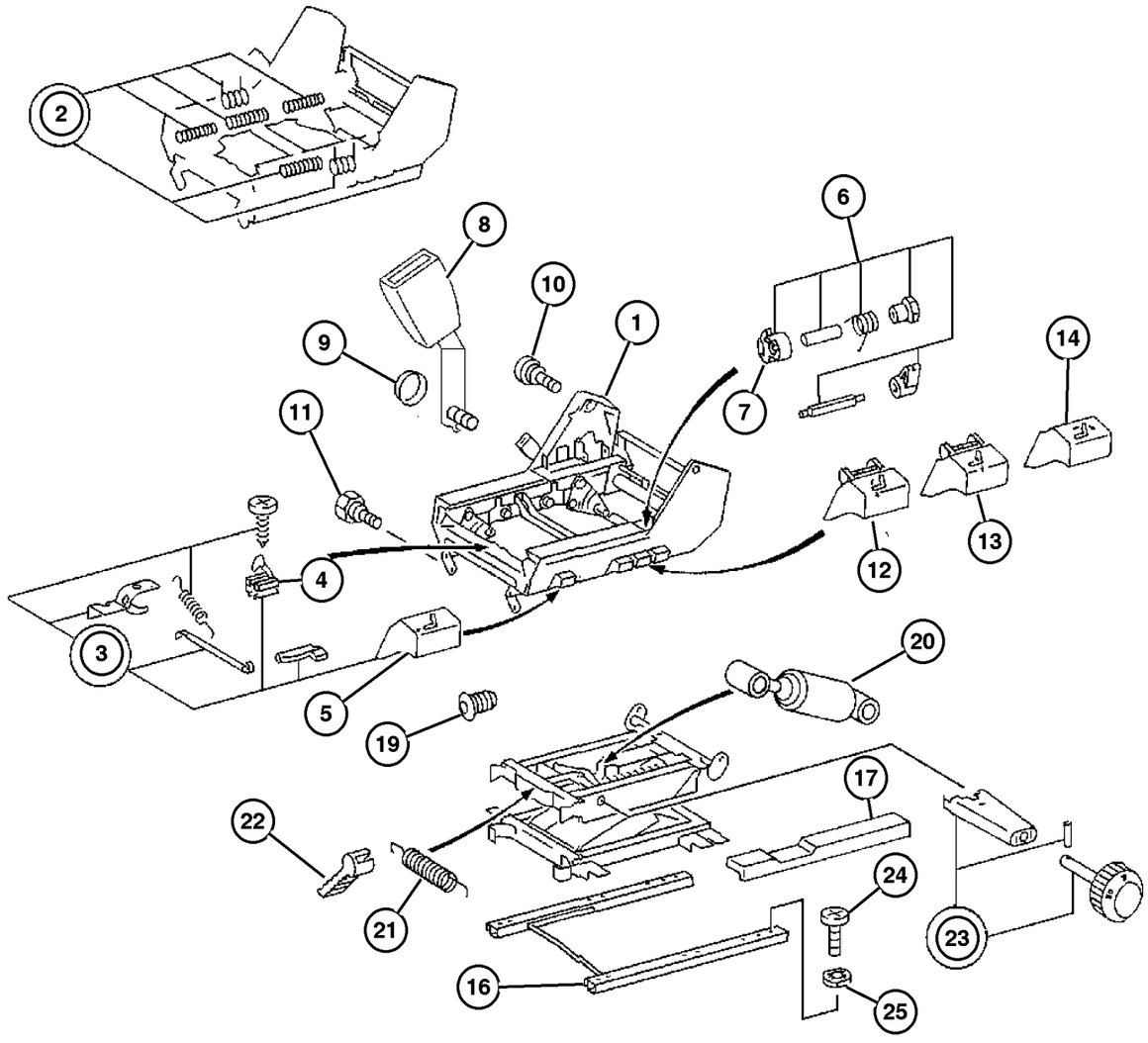

ITEM	PART NUMBER	QTY	LINE	SERIES	BODY	ENGINE	TRANS	TRIM	DESCRIPTION
24									SCREW, Seat
	5126 139AA	6	2, 6	L	01, 02, 06				
		6	2, 6	L	11, 12, 14, 15, 16				
		6	2, 6	L	51, 52, 54, 55, 56				
		6	3, 7	L	02, 06				
		6	3, 7	L	12, 15, 16				
25									WASHER, Locking
	5125 426AA	4	2, 6	L	01, 02, 06				
		4	2, 6	L	11, 12, 14, 15, 16				
		4	2, 6	L	51, 52, 54, 55, 56				
		4	3, 7	L	02, 06				
		4	3, 7	L	12, 15, 16				

Refer to Model Legend Information Bookmark

AR = Use as required - = Non illustrated part # = New this model year

March 3, 2006

« RETURN TO GROUP INDEX

Front Seat - Attaching Parts - Riser
Figure IVA-530

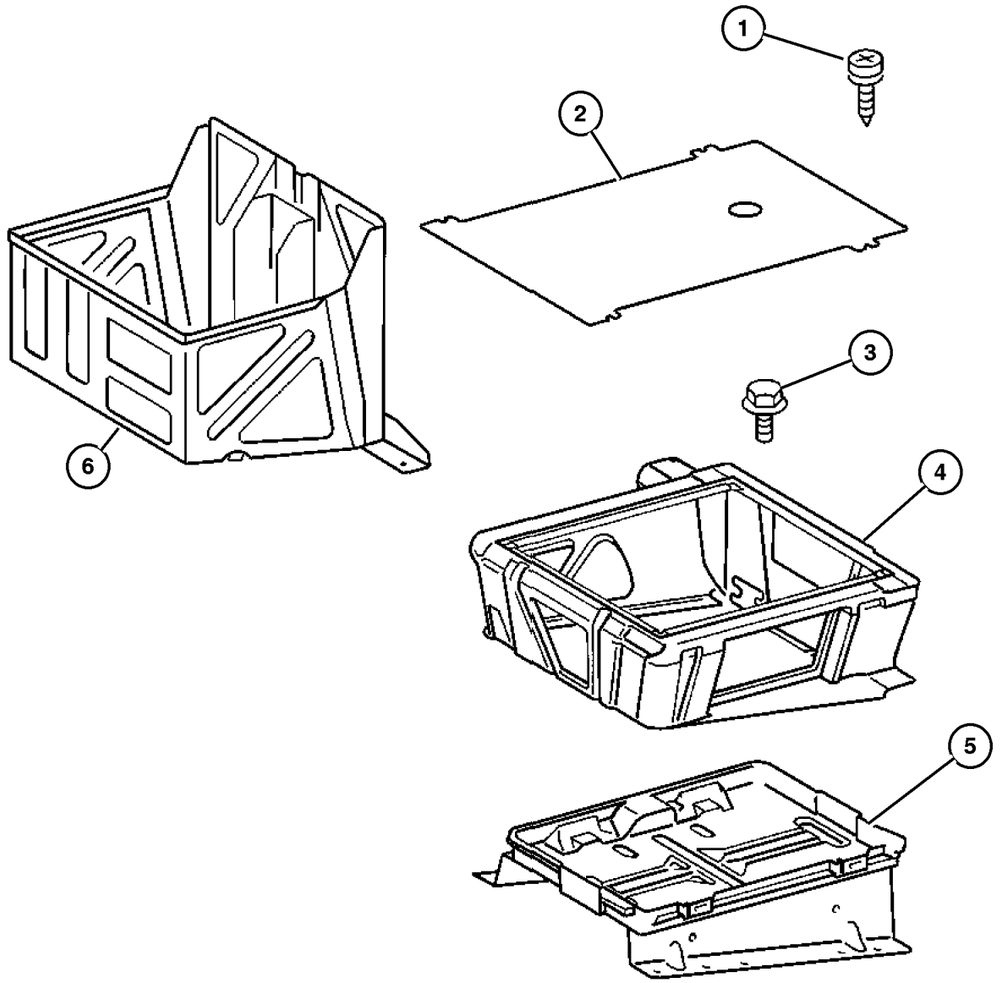

ITEM	PART NUMBER	QTY	LINE	SERIES	BODY	ENGINE	TRANS	TRIM	DESCRIPTION
1									SCREW, Tapping
	6104 574AA	3	2, 6	L	01, 02, 06				
		3	2, 6	L	11, 12, 14, 15, 16				
		3	2, 6	L	51, 52, 54, 55, 56				
		4	3, 7	L	12, 15, 16				
2									COVER
	5104 234AA	1	2, 6	L	01, 02, 06				Seat Box
		1	2, 6	L	11, 12, 14, 15, 16				Seat Box
		1	2, 6	L	51, 52, 54, 55, 56				Seat Box
		1	3, 7	L	02, 06				Seat Box
		1	3, 7	L	12, 15, 16				Seat Box
3									BOLT, Hex Head
	5126 227AA	2	2, 6	L	01, 02, 06				
		2	2, 6	L	11, 12, 14, 15, 16				
		2	2, 6	L	51, 52, 54, 55, 56				
		2	3, 7	L	02, 06				
		2	3, 7	L	12, 15, 16				
4									RISER, Seat
	5122 187AA	1	2, 6	L	11, 12, 14, 15, 16				Driver
		1	2, 6	L	51, 52, 54, 55, 56				Driver
		1	3, 7	L	12, 15, 16				Driver

Refer to Model Legend Information Bookmark

Front Seat - Attaching Parts - Riser
Figure IVA-530

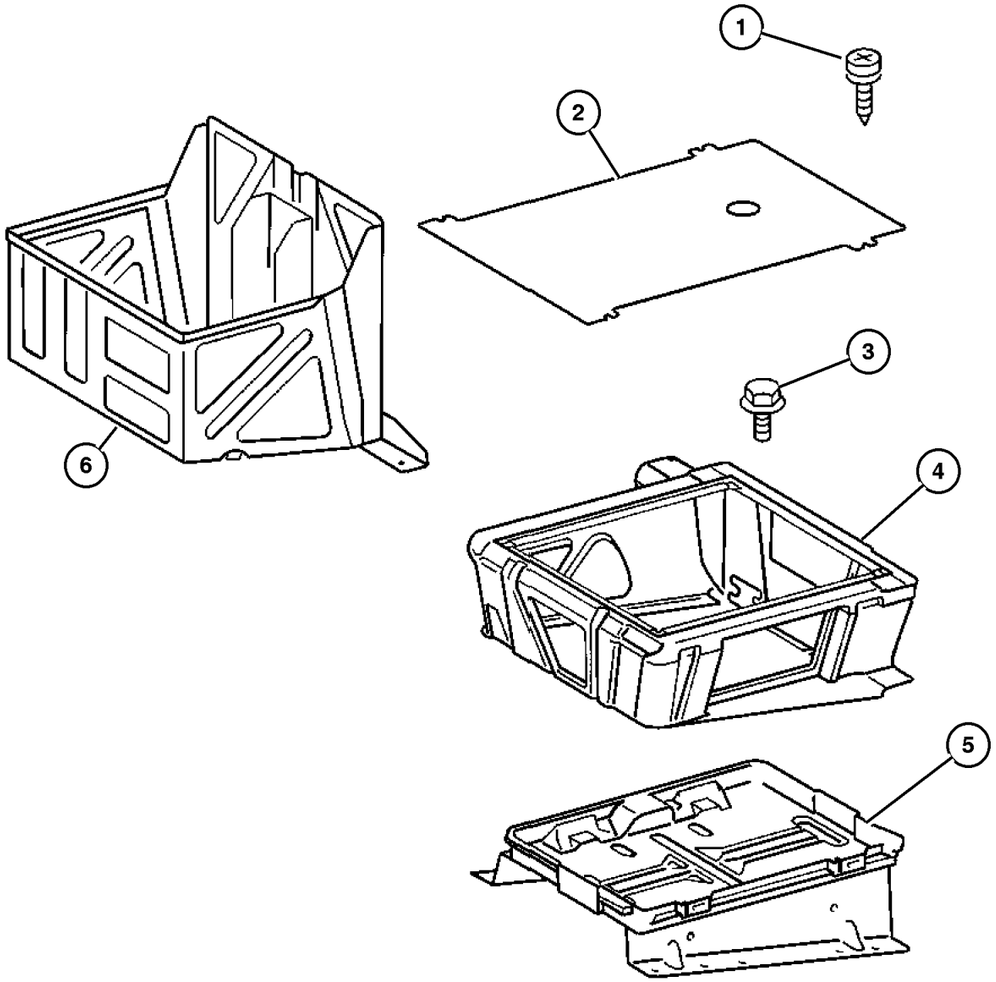

ITEM	PART NUMBER	QTY	LINE	SERIES	BODY	ENGINE	TRANS	TRIM	DESCRIPTION
	5122 192AA	1	2, 6	L	11, 12, 14, 15, 16				Passenger
		1	2, 6	L	51, 52, 54, 55, 56				Passenger
		1	3, 7	L	12, 15, 16				Passenger
5									TRAY, Battery
	5122 170AA	1	2, 6	L	01, 02, 06				With Aux Battery [2500GVW]
		1	2, 6	L	11, 12, 14, 15, 16				With Aux Battery [2500GVW]
		1	2, 6	L	51, 52, 54, 55, 56				With Aux Battery [2500GVW]
		1	3, 7	L	02, 06				With Aux Battery [2500GVW]
		1	3, 7	L	12, 15, 16				With Aux Battery [2500GVW]
6									BOX, Riser, (NOT SERVICED) (Not Serviced)

Refer to Model Legend Information Bookmark

AR = Use as required - = Non illustrated part # = New this model year

March 3, 2006

« RETURN TO GROUP INDEX

Front Seat - Attaching Parts
Figure IVA-535

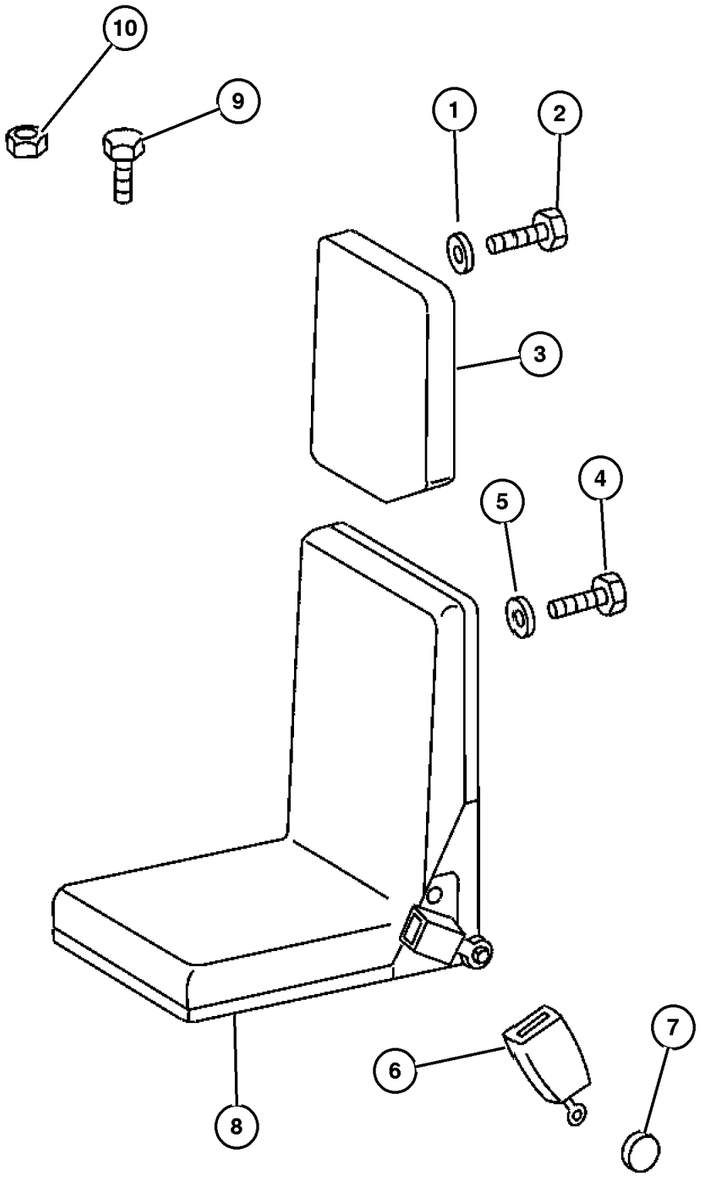

ITEM	PART NUMBER	QTY	LINE	SERIES	BODY	ENGINE	TRANS	TRIM	DESCRIPTION
1									WASHER, Flat
	5098 108AA	1	2, 6	L	01, 02, 06				
		1	2, 6	L	11, 12, 14, 15, 16				
		1	2, 6	L	51, 52, 54, 55, 56				
		1	3, 7	L	02, 06				
		1	3, 7	L	12, 15, 16				
2									SCREW
	6104 025AA	4	2, 6	L	11, 12, 14, 15, 16				
		4	2, 6	L	51, 52, 54, 55, 56				
		1	3, 7	L	12, 15, 16				
3	5104 535AA	1	3, 7	L	12, 15, 16				HEADREST, Front
4									BOLT
	6104 049AA	6	2, 6	L	11, 12, 14, 15, 16				
		6	2, 6	L	51, 52, 54, 55, 56				
		2	3, 7	L	12, 15, 16				
5									WASHER, Flat
	5104 641AA	4	2, 6	L	11, 12, 14, 15, 16				
		4	2, 6	L	51, 52, 54, 55, 56				
		2	3, 7	L	02, 06				
		2	3, 7	L	12, 15, 16				
6									SEAT BELT, See Ill 710 For Part Numbers, (NOT REQUIRED)
7									CAP, Screw Cover

Refer to Model Legend Information Bookmark

AR = Use as required - = Non illustrated part # = New this model year **March 3, 2006**

« RETURN TO GROUP INDEX »

Front Seat - Attaching Parts
Figure IVA-535

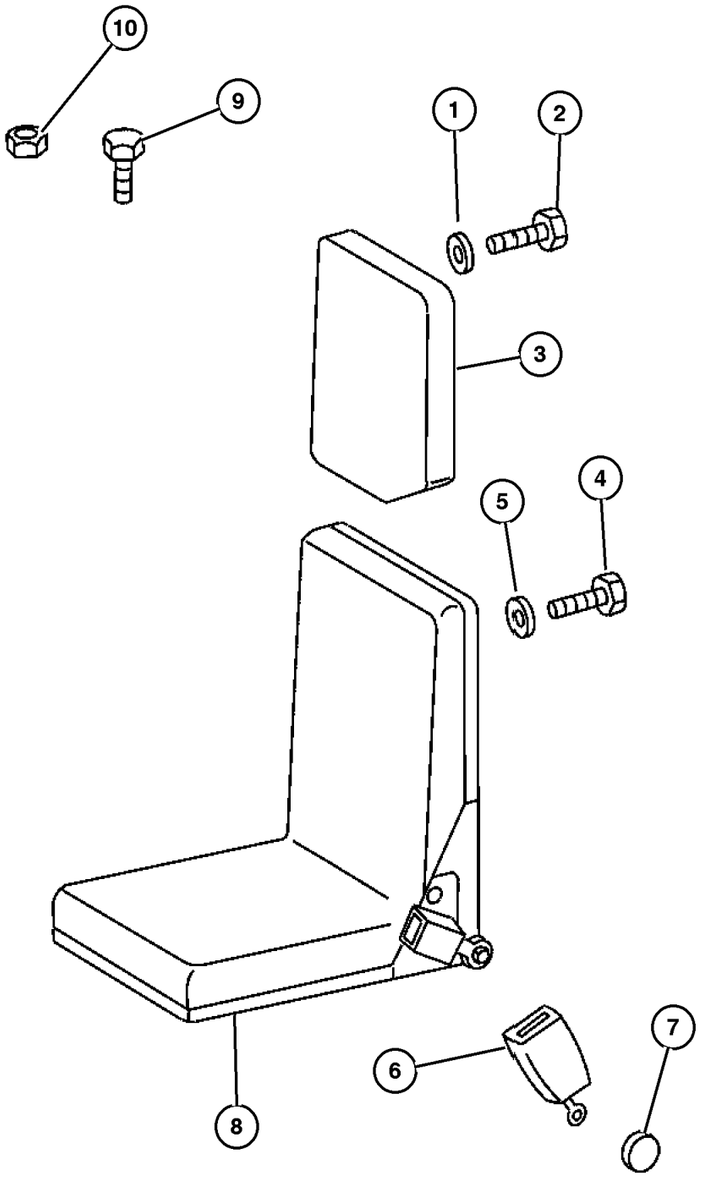

ITEM	PART NUMBER	QTY	LINE	SERIES	BODY	ENGINE	TRANS	TRIM	DESCRIPTION
	5125 999AA	2	2, 6	L	01, 02, 06				
		2	2, 6	L	11, 12, 14, 15, 16				
		2	2, 6	L	51, 52, 54, 55, 56				
		1	3, 7	L	12, 15, 16				
8	5125 327AA	1	2, 6	L	11, 12, 14, 15, 16				SEAT COMPLETE, Front
9									BOLT, Hex Head
	5103 816AA	7	2, 6	L	11, 12, 14, 15				
		9	2, 6	L	16				
		8	2, 6	L	16				
		7	3, 7	L	12, 15				
		9	3, 7	L	16				
10									NUT
	6104 716AA	4	2, 6	L	01, 02, 06				
		4	2, 6	L	11, 12, 14, 15, 16				
		4	2, 6	L	51, 52, 54, 55, 56				
		4	3, 7	L	12, 15, 16				

Refer to Model Legend Information Bookmark

AR = Use as required - = Non illustrated part # = New this model year

March 3, 2006

« RETURN TO GROUP INDEX

Rear Seat - 2 Passenger
Figure IVA-610

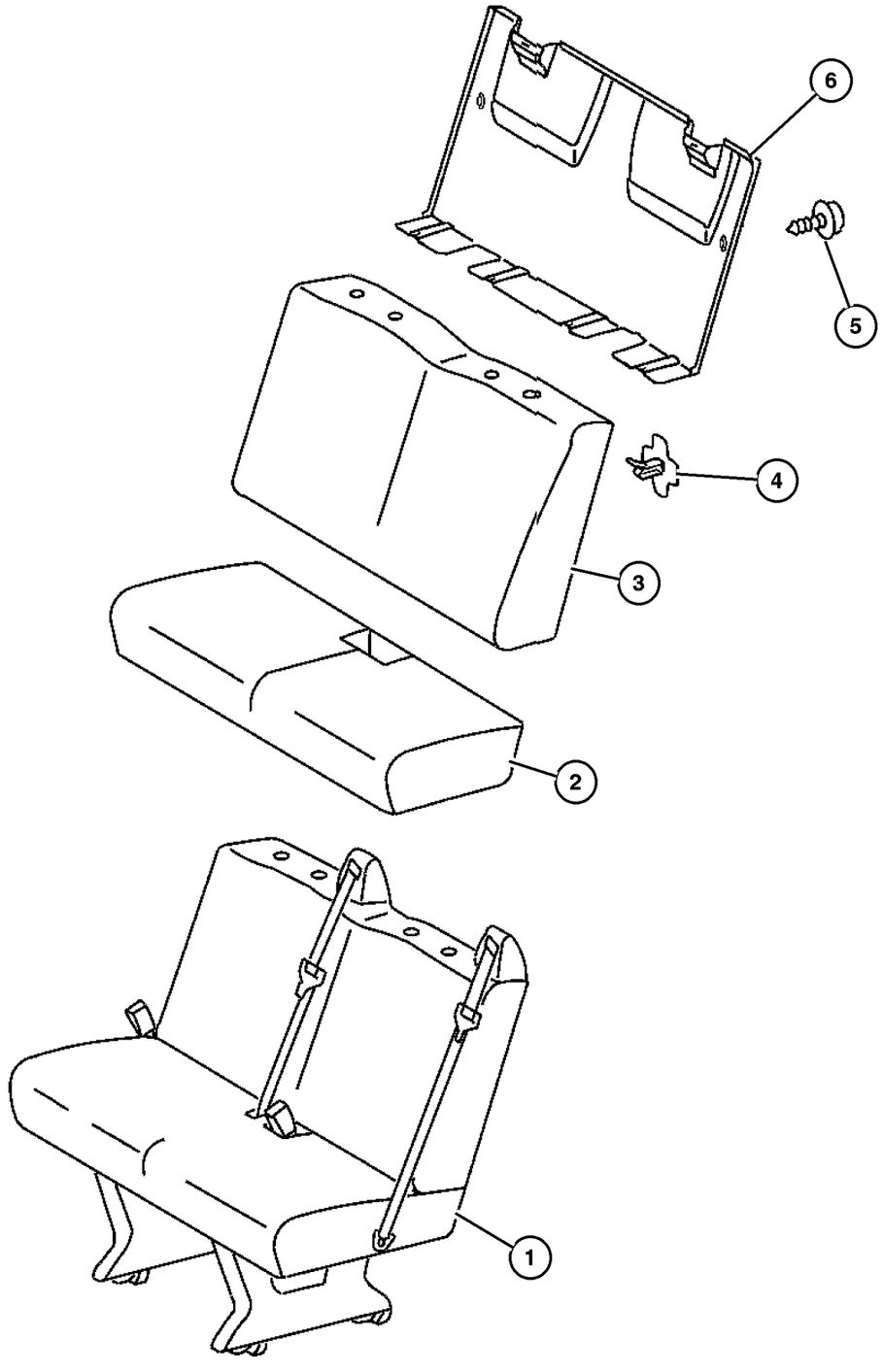

ITEM	PART NUMBER	QTY	LINE	SERIES	BODY	ENGINE	TRANS	TRIM	DESCRIPTION
1									SEAT COMPLETE, Rear, Two Passenger
	5133 134AA	1	2, 6	L	51, 52, 54, 55, 56				Santos
	5133 138AA	1	2, 6	L	51, 52, 54, 55, 56				
2									CUSHION, Rear Seat, Two Passenger
	5134 085AA	1	2, 6	L	11, 12, 14, 15, 16				Santos
		1	2, 6	L	51, 52, 54, 55, 56				Santos
		1	3, 7	L	12, 15, 16				Santos
	5134 610AA	1	2, 6	L	11, 12, 14, 15, 16				
		1	2, 6	L	51, 52, 54, 55, 56				
		1	3, 7	L	12, 15, 16				
3									SEAT BACK, Rear, 2 Passenger
	5134 088AA	1	2, 6	L	11, 12, 14, 15, 16				Santos
		1	2, 6	L	51, 52, 54, 55, 56				Santos
		1	3, 7	L	12, 15, 16				Santos
	5134 611AA	1	2, 6	L	11, 12, 14, 15, 16				
		1	2, 6	L	51, 52, 54, 55, 56				
		1	3, 7	L	12, 15, 16				
4									BRACKET, Rear Seatback

Refer to Model Legend Information Bookmark

Rear Seat - 2 Passenger
Figure IVA-610

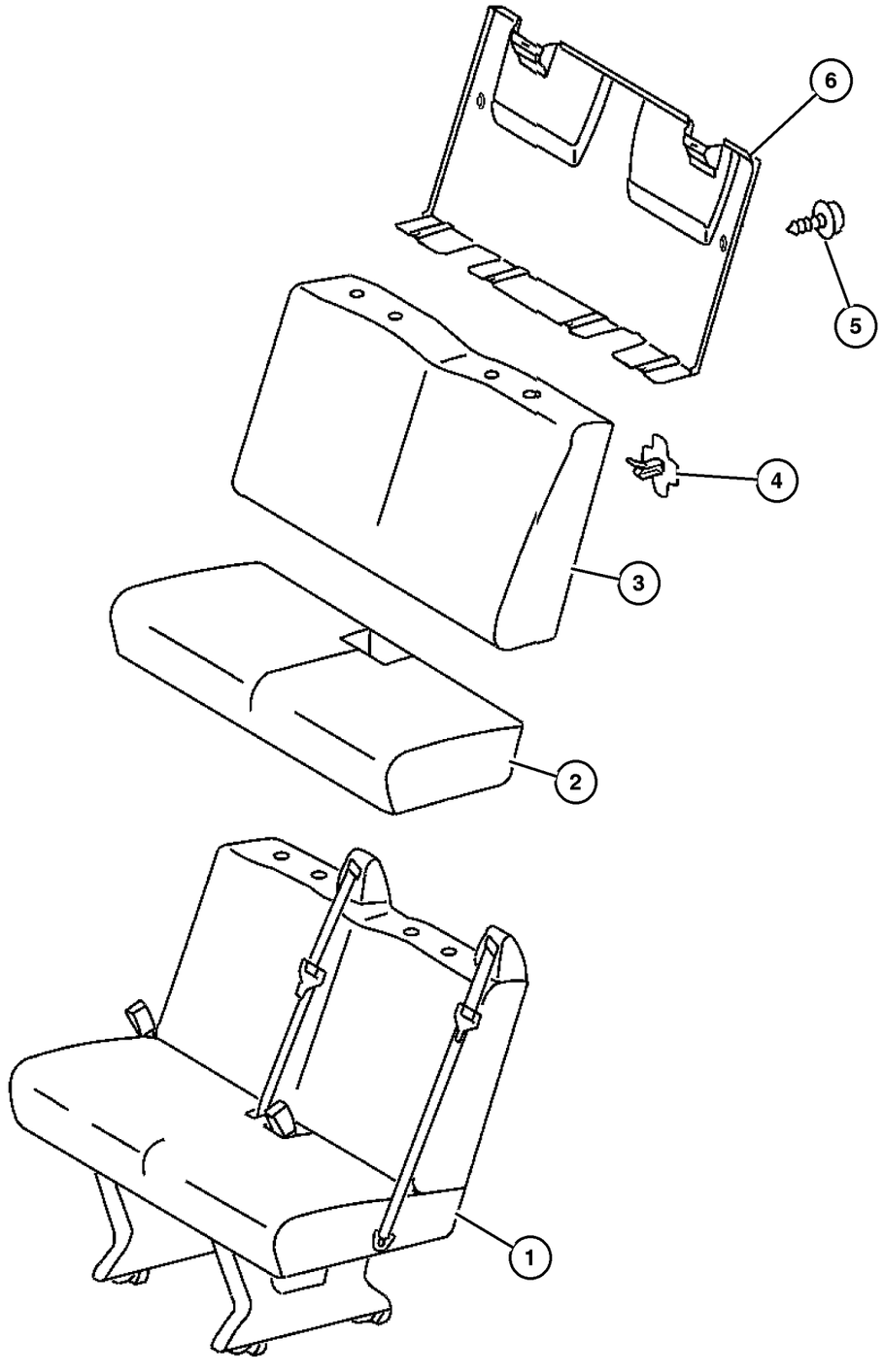

ITEM	PART NUMBER	QTY	LINE	SERIES	BODY	ENGINE	TRANS	TRIM	DESCRIPTION
	5103 706AA	1	2, 6	L	11, 12, 14, 15, 16				Right
		1	2, 6	L	51, 52, 54, 55, 56				Right
		1	3, 7	L	12, 15, 16				Right
	5103 707AA	1	2, 6	L	11, 12, 14, 15, 16				Left
		1	2, 6	L	51, 52, 54, 55, 56				Left
		1	3, 7	L	12, 15, 16				Left
5									PANEL, Rear Seat Back
	5134 089AA	1	2, 6	L	11, 12, 14, 15, 16				Two Passenger
		1	2, 6	L	51, 52, 54, 55, 56				Two Passenger
		1	3, 7	L	12, 15, 16				Two Passenger
6									SCREW, Self-Tapping
	5133 295AA	2	2, 6	L	11, 12, 14, 15, 16				
		2	2, 6	L	51, 52, 54, 55, 56				
		2	3, 7	L	12, 15, 16				

Refer to Model Legend Information Bookmark

AR = Use as required - = Non illustrated part # = New this model year

March 3, 2006

« RETURN TO GROUP INDEX

Rear Seat - 3 Passenger
Figure IVA-615

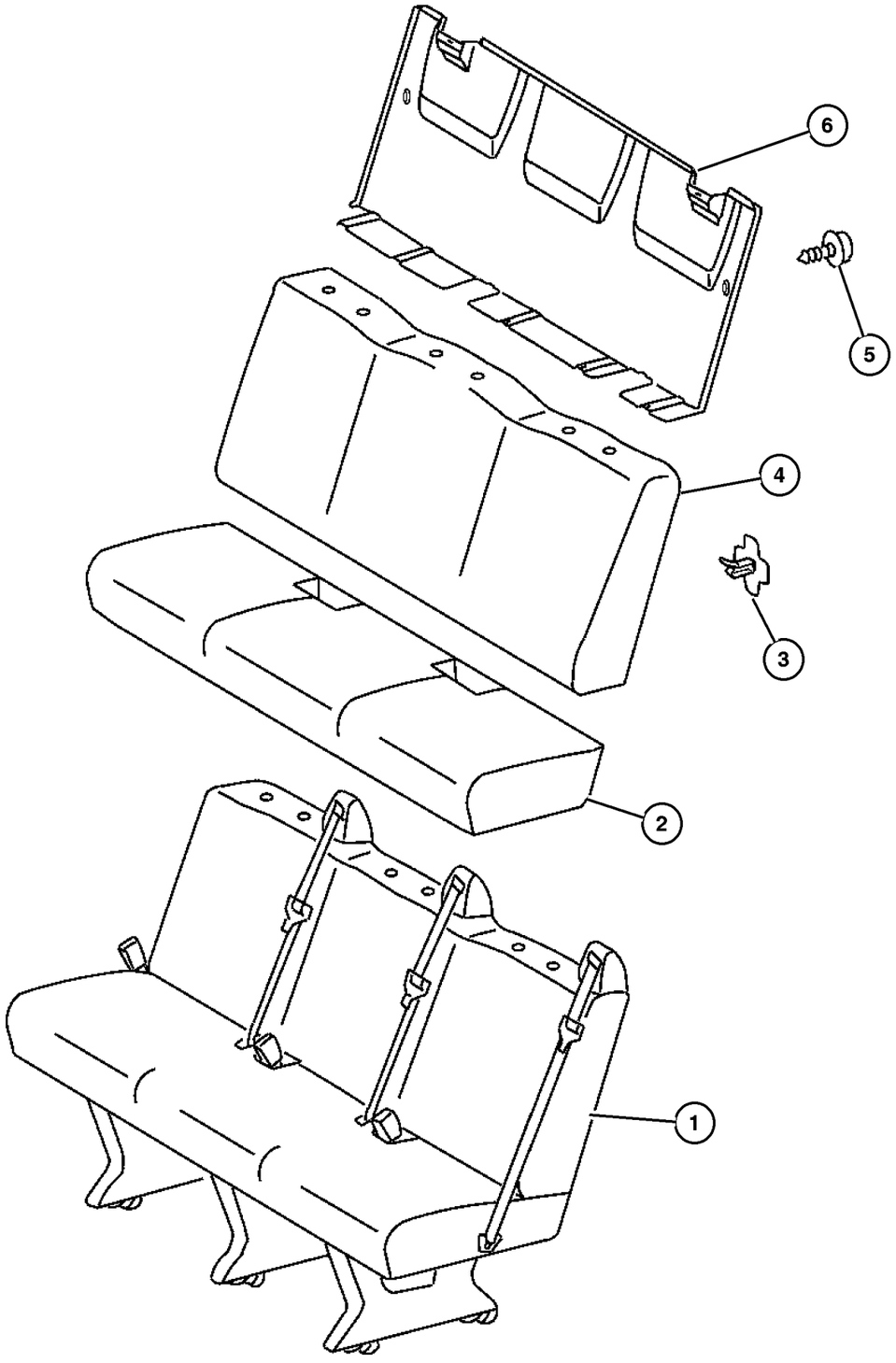

ITEM	PART NUMBER	QTY	LINE	SERIES	BODY	ENGINE	TRANS	TRIM	DESCRIPTION
1									SEAT COMPLETE, Rear, Three Passenger
	5133 118AA	1	2, 6	L	11, 12, 14, 15, 16				Santos,First Rear Bench
		1	2, 6	L	51, 52, 54, 55, 56				Santos,First Rear Bench
	5133 126AA	1	2, 6	L	51, 52, 54, 55, 56				Santos,Second Rear Bench
		1	2, 6	L	51, 52, 54, 55, 56				Santos,Third Rear Bench
	5133 122AA	1	2, 6	L	11, 12, 14, 15, 16				First Rear Bench
		1	2, 6	L	51, 52, 54, 55, 56				First Rear Bench
	5133 130AA	1	2, 6	L	51, 52, 54, 55, 56				Second Rear Bench
		1	2, 6	L	51, 52, 54, 55, 56				Third Rear Bench
2									CUSHION, Rear Seat, Three Passenger
	5134 103AA	1	2, 6	L	11, 12, 14, 15, 16				Santos,Second & Third Row Rear Bench
		1	2, 6	L	51, 52, 54, 55, 56				Santos,Second & Third Row Rear Bench
		1	3, 7	L	12, 15, 16				Santos,Second & Third Row Rear Bench
	5134 612AA	1	2, 6	L	11, 12, 14, 15, 16				First Rear Bench
		1	2, 6	L	51, 52, 54, 55, 56				First Rear Bench
		1	3, 7	L	12, 15, 16				First Rear Bench

Refer to Model Legend Information Bookmark

AR = Use as required - = Non illustrated part # = New this model year

March 3, 2006

« RETURN TO GROUP INDEX

»

Rear Seat - 3 Passenger
Figure IVA-615

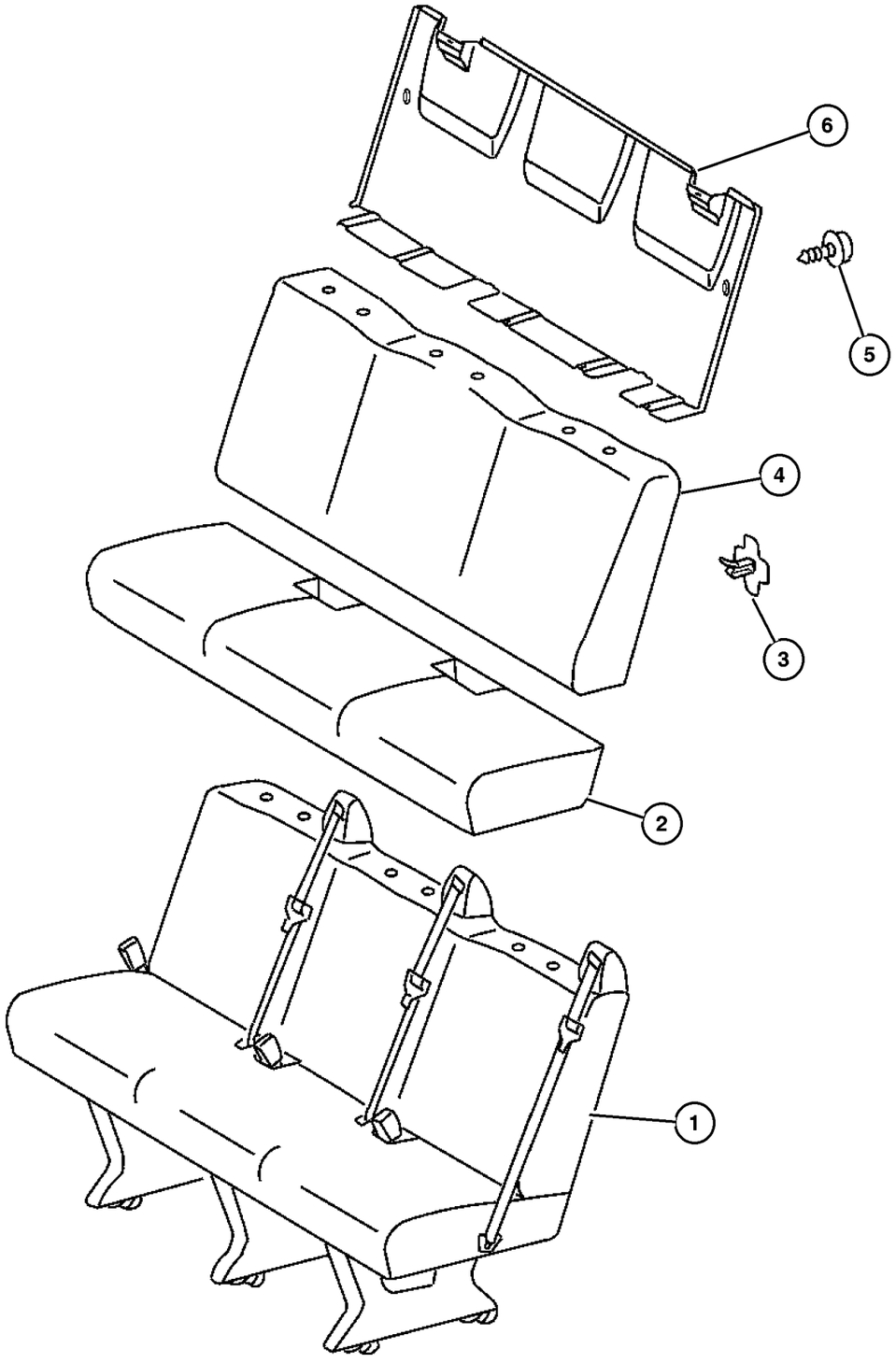

ITEM	PART NUMBER	QTY	LINE	SERIES	BODY	ENGINE	TRANS	TRIM	DESCRIPTION
	5134 614AA	1	2, 6	L	11, 12, 14, 15, 16				Second & Third Row Rear Bench
		1	2, 6	L	51, 52, 54, 55, 56				Second & Third Row Rear Bench
		1	3, 7	L	12, 15, 16				Second & Third Row Rear Bench
3									BRACKET, Rear Seatback
	5103 706AA	1	2, 6	L	11, 12, 14, 15, 16				Right
		1	2, 6	L	51, 52, 54, 55, 56				Right
		1	3, 7	L	12, 15, 16				Right
	5103 707AA	1	2, 6	L	11, 12, 14, 15, 16				Left
		1	2, 6	L	51, 52, 54, 55, 56				Left
		1	3, 7	L	12, 15, 16				Left
4									SEAT BACK, Rear, 3 Passenger
	5134 106AA	1	2, 6	L	11, 12, 14, 15, 16				Santos,Second & Third Row Rear Bench
		1	2, 6	L	51, 52, 54, 55, 56				Santos,Second & Third Row Rear Bench
		1	3, 7	L	12, 15, 16				Santos,Second & Third Row Rear Bench
	5134 613AA	1	2, 6	L	11, 12, 14, 15, 16				First Rear Bench
		1	2, 6	L	51, 52, 54, 55, 56				First Rear Bench
		1	3, 7	L	12, 15, 16				First Rear Bench
	5134 615AA	1	2, 6	L	11, 12, 14, 15, 16				Second & Third Row Rear Bench

Refer to Model Legend Information Bookmark

AR = Use as required - = Non illustrated part # = New this model year

March 3, 2006

« RETURN TO GROUP INDEX

Rear Seat - 3 Passenger
Figure IVA-615

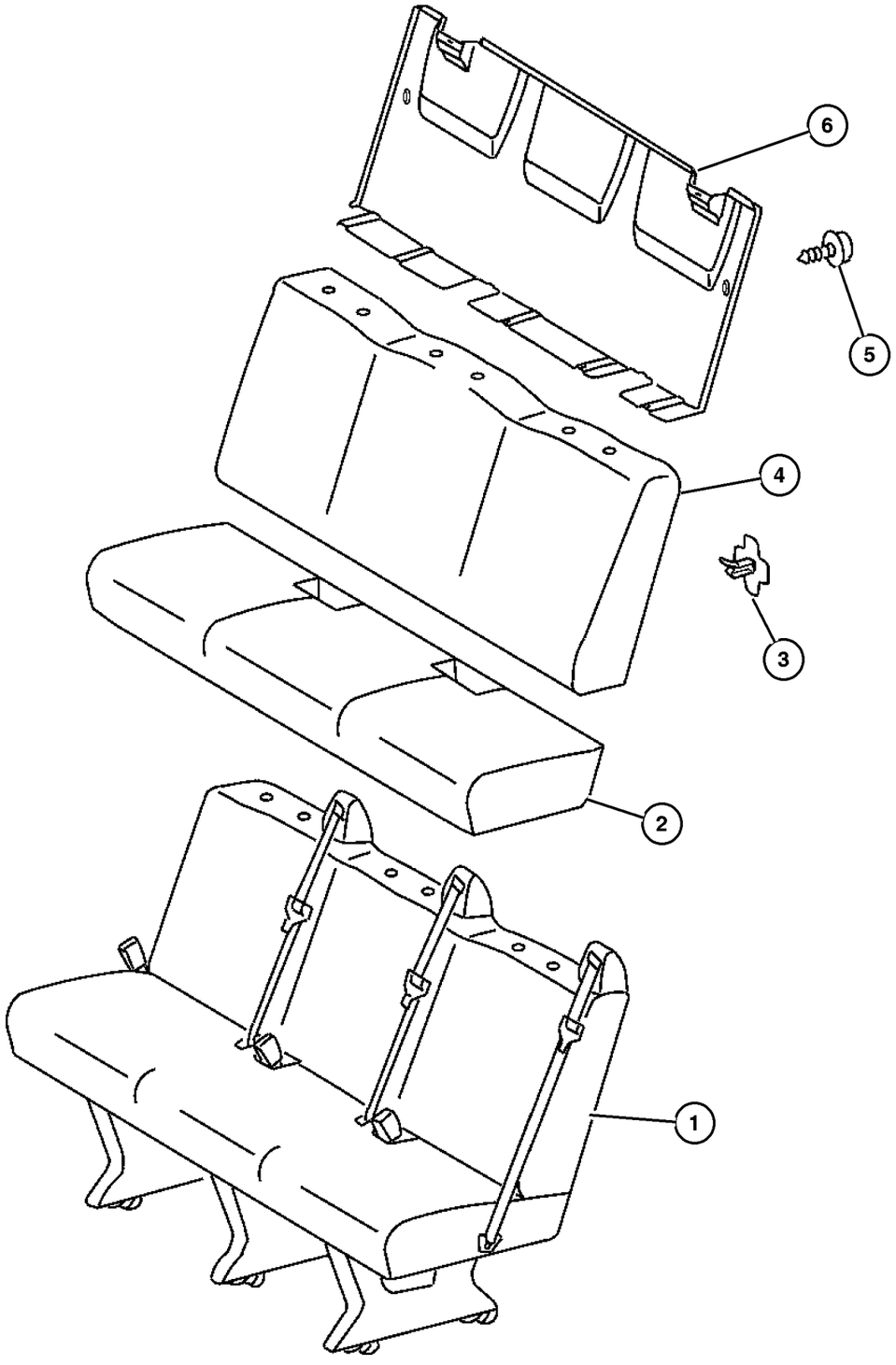

ITEM	PART NUMBER	QTY	LINE	SERIES	BODY	ENGINE	TRANS	TRIM	DESCRIPTION
		1	2, 6	L	51, 52, 54, 55, 56				Second & Third Row Rear Bench
		1	3, 7	L	12, 15, 16				Second & Third Row Rear Bench
5									SCREW, Self-Tapping
	5133 295AA	2	2, 6	L	11, 12, 14, 15, 16				
		2	2, 6	L	51, 52, 54, 55, 56				
6									PANEL, Seat Back, Two Passenger
	5134 096AA	1	2, 6	L	11, 12, 14, 15, 16				
		1	2, 6	L	51, 52, 54, 55, 56				
		1	3, 7	L	12, 15, 16				

Refer to Model Legend Information Bookmark

AR = Use as required - = Non illustrated part # = New this model year

March 3, 2006

« RETURN TO GROUP INDEX

Attaching Parts - 3rd Passenger Seat
Figure IVA-620

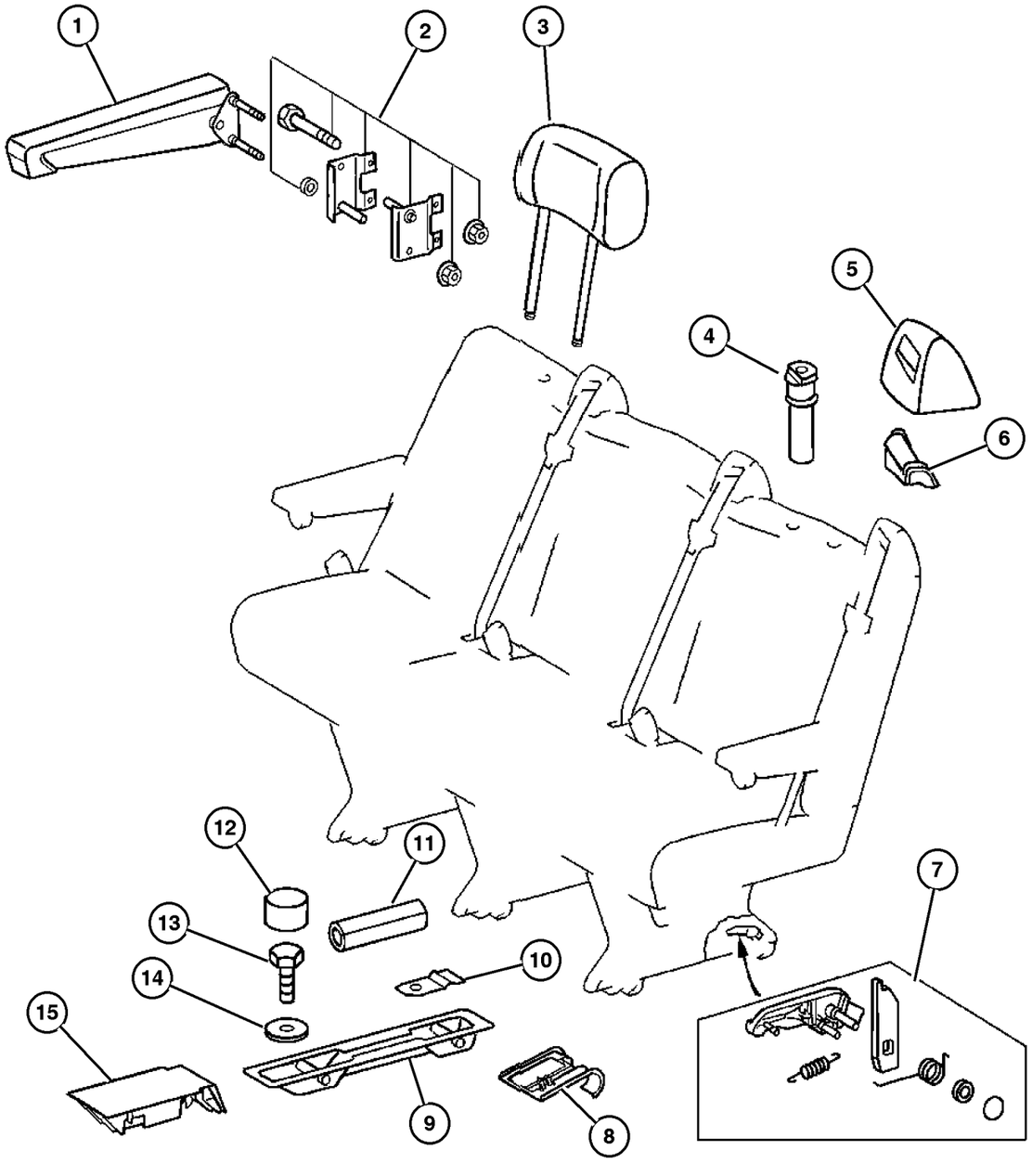

ITEM	PART NUMBER	QTY	LINE	SERIES	BODY	ENGINE	TRANS	TRIM	DESCRIPTION
1									ARMREST, REAR SEAT
	ZN57 CSSAA	1	2, 6	L	11, 12, 14, 15, 16			B7	Left
		1	2, 6	L	51, 52, 54, 55, 56			B7	Left
		1	3, 7	L	12, 15, 16			B7	Left
	ZN58 CSSAA	1	2, 6	L	11, 12, 14, 15, 16			B7	Right
		1	2, 6	L	51, 52, 54, 55, 56			B7	Right
		1	3, 7	L	12, 15, 16			B7	Right
2									BRACKET, Arm Rest
	5134 098AA	1	2, 6	L	11, 12, 14, 15, 16				
		1	2, 6	L	51, 52, 54, 55, 56				
		1	3, 7	L	12, 15, 16				
3									HEADREST
	5104 534AA	3	2, 6	L	11, 12, 14, 15, 16				Catano
		3	3, 7	L	12, 15, 16				Catano
	5125 368AA	3	2, 6	L	11, 12, 14, 15, 16				Venice
		3	3, 7	L	12, 15, 16				Venice
	5125 377AA	1	2, 6	L	51, 52, 54, 55, 56				Santos
		1	3, 7	L	02, 06				Santos
		1	3, 7	L	12, 15, 16				Santos
4									SLEEVE, Headrest

Refer to Model Legend Information Bookmark

AR = Use as required - = Non illustrated part # = New this model year

March 3, 2006

« RETURN TO GROUP INDEX

»

Attaching Parts - 3rd Passenger Seat
Figure IVA-620

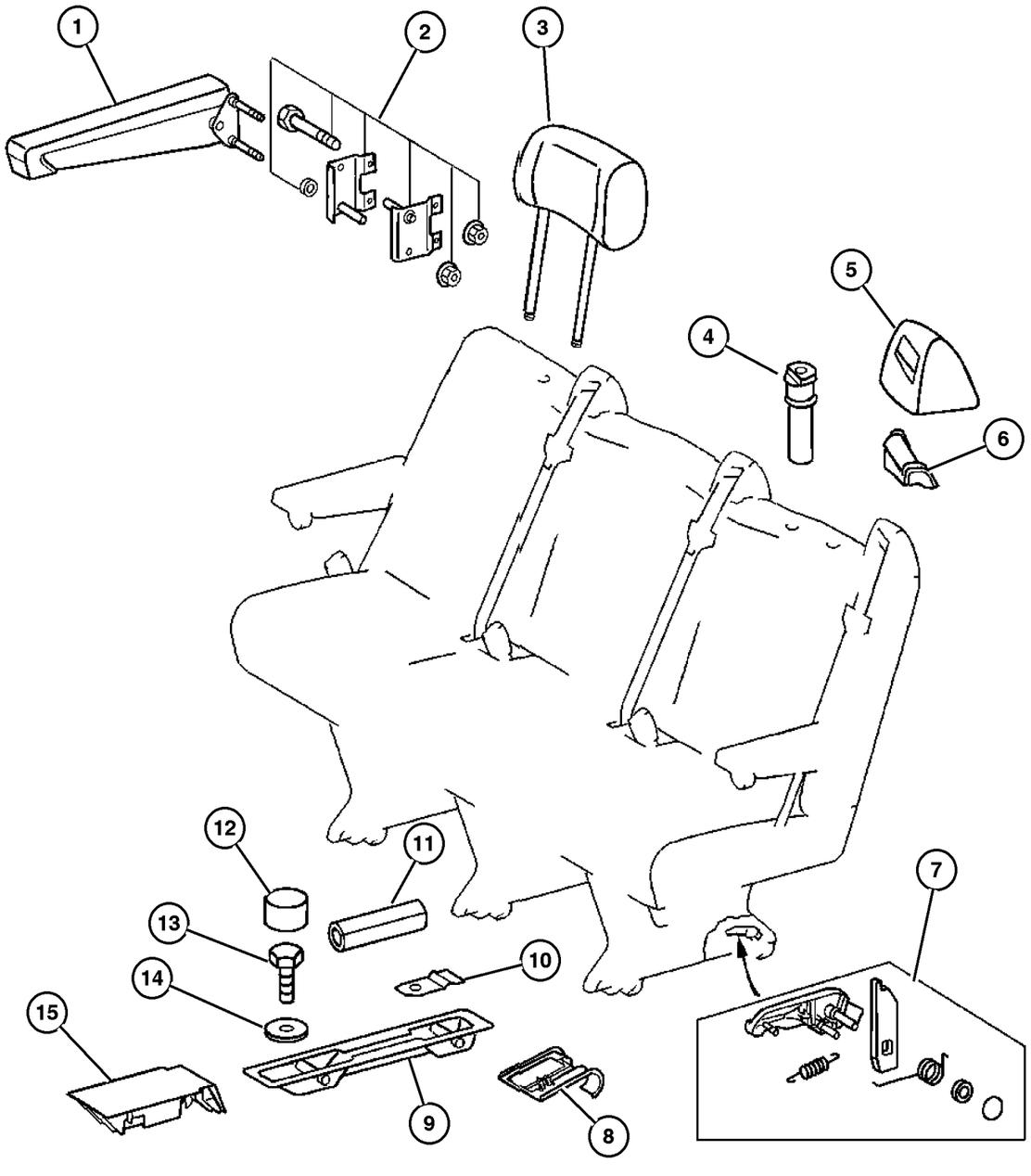

ITEM	PART NUMBER	QTY	LINE	SERIES	BODY	ENGINE	TRANS	TRIM	DESCRIPTION
	1AV08 AA7AA	2	2, 6	L	01, 02, 06			B7	
		2	2, 6	L	11, 12, 14, 15, 16			B7	
		2	2, 6	L	51, 52, 54, 55, 56			B7	
		2	3, 7	L	02, 06			B7	
		2	3, 7	L	12, 15, 16			B7	
5									COVER, Seat Belt Opening
	5103 708AA	1	2, 6	L	11, 12, 14, 15, 16				
		1	2, 6	L	51, 52, 54, 55, 56				
		1	3, 7	L	12, 15, 16				
6									GUIDE, Seat Belt
	5103 709AA	1	2, 6	L	11, 12, 14, 15, 16				
		1	2, 6	L	51, 52, 54, 55, 56				
		1	3, 7	L	12, 15, 16				
7									LATCH, Seat
	5103 704AA	2	2, 6	L	11, 12, 14, 15, 16				
		2	2, 6	L	51, 52, 54, 55, 56				
		2	3, 7	L	12, 15, 16				
8									ESCUTCHEON, Seat Anchor
	5134 099AA	4	2, 6	L	11, 12, 14, 15, 16				
		4	2, 6	L	51, 52, 54, 55, 56				

Refer to Model Legend Information Bookmark

AR = Use as required - = Non illustrated part # = New this model year

March 3, 2006

« RETURN TO GROUP INDEX

Attaching Parts - 3rd Passenger Seat
Figure IVA-620

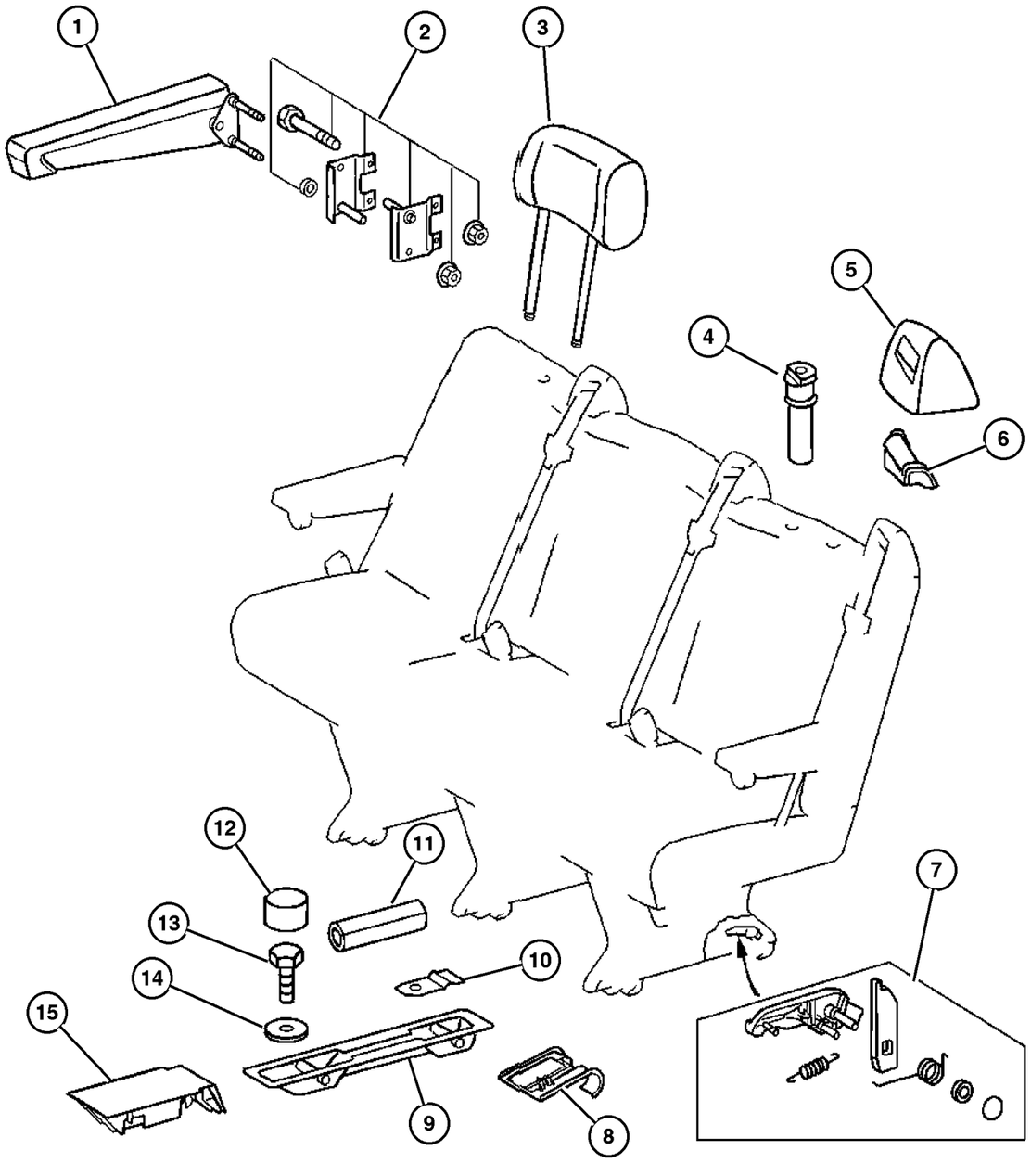

ITEM	PART NUMBER	QTY	LINE	SERIES	BODY	ENGINE	TRANS	TRIM	DESCRIPTION
		4	3, 7	L	12, 15, 16				
9									ESCUTCHEON, Seat Anchor
	5104 531AA	1	2, 6	L	11, 12, 14, 15, 16				Second Rear Bench, 2 Passenger
		1	2, 6	L	51, 52, 54, 55, 56				Second Rear Bench, 2 Passenger
		1	3, 7	L	12, 15, 16				Second Rear Bench, 2 Passenger
	5104 532AA	1	2, 6	L	11, 12, 14, 15, 16				First Rear Bench, 3 Passenger
		1	2, 6	L	51, 52, 54, 55, 56				First Rear Bench, 3 Passenger
		1	3, 7	L	12, 15, 16				First Rear Bench, 3 Passenger
10									SPRING, Seat Latch Return
	5134 097AA	2	2, 6	L	11, 12, 14, 15, 16				
		2	2, 6	L	51, 52, 54, 55, 56				
		2	3, 7	L	12, 15, 16				
11									PIN, Roll
	5104 550AA	2	2, 6	L	11, 12, 14, 15, 16				
		2	2, 6	L	51, 52, 54, 55, 56				
		2	3, 7	L	12, 15, 16				
12									COVER, Seat Belt
	5133 484AA	6	2, 6	L	11, 12, 14, 15, 16				
		6	2, 6	L	51, 52, 54, 55, 56				

Refer to Model Legend Information Bookmark

AR = Use as required - = Non illustrated part # = New this model year

March 3, 2006

Attaching Parts - 3rd Passenger Seat
Figure IVA-620

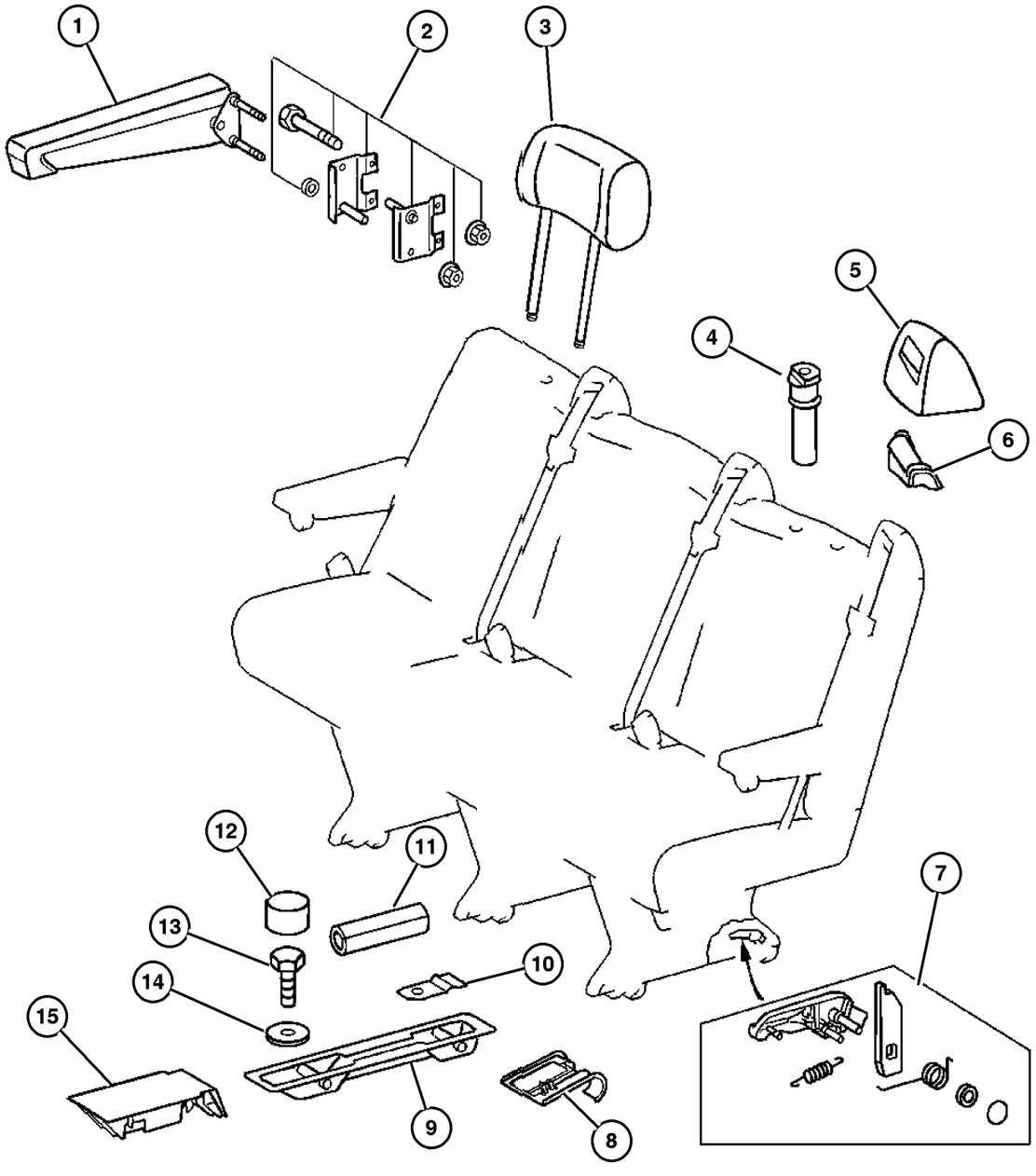

ITEM	PART NUMBER	QTY	LINE	SERIES	BODY	ENGINE	TRANS	TRIM	DESCRIPTION
		6	3, 7	L	12, 15, 16				
13									BOLT, Hex Head
	6104 216AA	4	2, 6	L	11, 12, 14, 15, 16				
		4	2, 6	L	51, 52, 54, 55, 56				
		4	3, 7	L	12, 15, 16				
		4	3, 7	L	02, 06				
14									WASHER, Flat
	5126 189AA	4	2, 6	L	11, 12, 14, 15, 16				
		4	2, 6	L	51, 52, 54, 55, 56				
		4	3, 7	L	12, 15, 16				
15									COVER, Seat Anchor
	5104 533AA	1	2, 6	L	11, 12, 14, 15, 16				
		1	2, 6	L	51, 52, 54, 55, 56				
		1	3, 7	L	12, 15, 16				
-16	5133 285AA-	1	3, 7	L	12, 15, 16				HANDLE, Seat Adjuster

Refer to Model Legend Information Bookmark

AR = Use as required - = Non illustrated part # = New this model year

March 3, 2006

« RETURN TO GROUP INDEX

Seat Belt - Front
Figure IVA-710

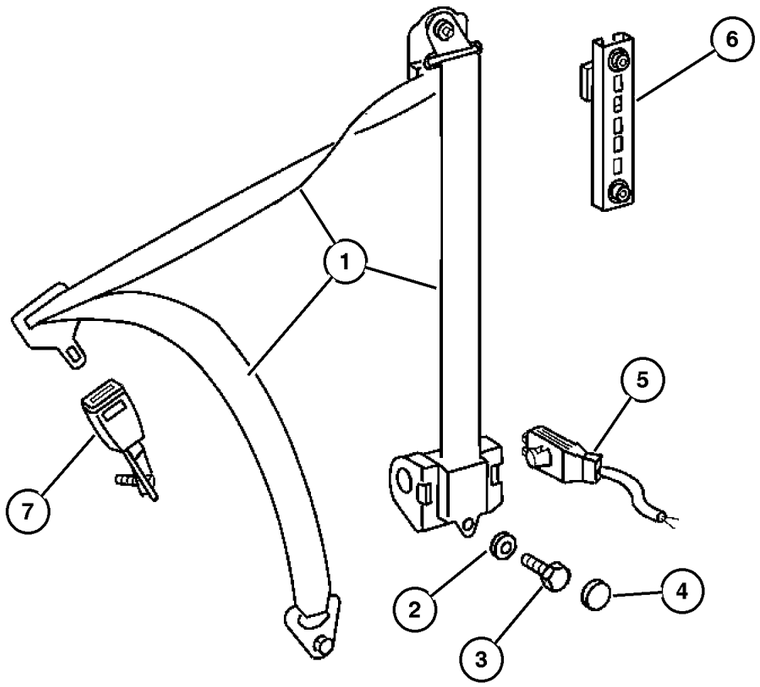

ITEM	PART NUMBER	QTY	LINE	SERIES	BODY	ENGINE	TRANS	TRIM	DESCRIPTION
1									SEAT BELT, Front Outer
	5103 812AA	1	2, 6	L	01, 02, 06				Left
		1	2, 6	L	11, 12, 14, 15, 16				Left
		1	2, 6	L	51, 52, 54, 55, 56				Left
		1	3, 7	L	02, 06				Left
		1	3, 7	L	12, 15, 16				Left
	5103 835AA	1	2, 6	L	01, 02, 06				Used without Jump Seat, Right
		1	2, 6	L	11, 12, 14, 15, 16				Used without Jump Seat, Right
		1	2, 6	L	51, 52, 54, 55, 56				Used without Jump Seat, Right
		1	3, 7	L	02, 06				Used without Jump Seat, Right
		1	3, 7	L	12, 15, 16				Used without Jump Seat, Right
	5103 836AA	1	2, 6	L	11, 12, 14, 15, 16				Orange, Right & Left
		1	3, 7	L	12, 15, 16				Orange, Right & Left
	5125 023AA	1	2, 6	L	11, 12, 14, 15, 16				Right
		1	3, 7	L	12, 15, 16				Right
	5125 026AA	1	2, 6	L	01, 02, 06				Used with Jump Seat, Right
		1	2, 6	L	11, 12, 14, 15, 16				Used with Jump Seat, Right
		1	3, 7	L	02, 06				Used with Jump Seat, Right
		1	3, 7	L	12, 15, 16				Used with Jump Seat, Right
2									WASHER, Seat Belt Attaching
	5125 755AA	1	2, 6	L	01, 02, 06				

Refer to Model Legend Information Bookmark

Seat Belt - Front
Figure IVA-710

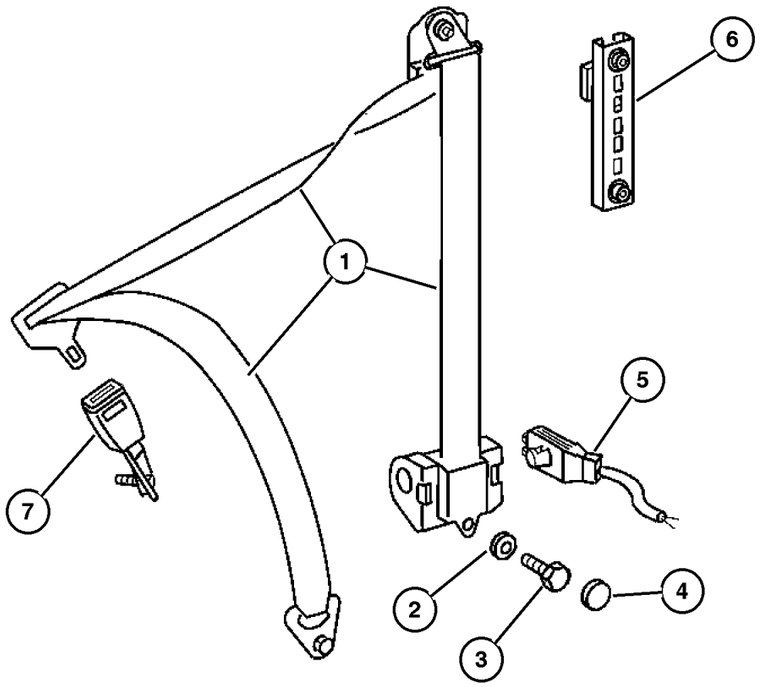

ITEM	PART NUMBER	QTY	LINE	SERIES	BODY	ENGINE	TRANS	TRIM	DESCRIPTION
		1	2, 6	L	11, 12, 14, 15, 16				
		1	2, 6	L	51, 52, 54, 55, 56				
3	5125 705AA	1	2, 6	L	01, 02, 06				BOLT, Seat Belt
		1	2, 6	L	11, 12, 14, 15, 16				
		1	2, 6	L	51, 52, 54, 55, 56				
4	5125 999AA	2	2, 6	L	01, 02, 06				CAP, Screw Cover
		1	2, 6	L	11, 12, 14, 15, 16				
		1	2, 6	L	51, 52, 54, 55, 56				
		2	3, 7	L	02, 06				
		2	3, 7	L	12, 15, 16				
5	5133 485AA	2	2, 6	L	01, 02, 06				HARNESS, Wiring
		2	2, 6	L	11, 12, 14, 15, 16				
		2	2, 6	L	51, 52, 54, 55, 56				
		2	3, 7	L	02, 06				
		2	3, 7	L	12, 15, 16				
6	5104 498AA	1	2, 6	L	01, 02, 06				ADJUSTER, Seat Belt Turning Loop
		1	2, 6	L	11, 12, 14, 15, 16				

Refer to Model Legend Information Bookmark

Seat Belt - Front
Figure IVA-710

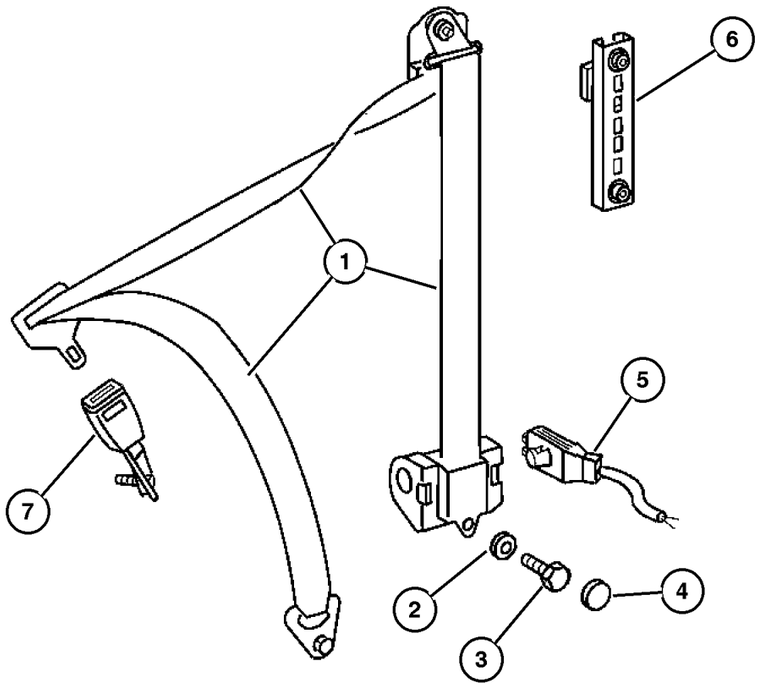

ITEM	PART NUMBER	QTY	LINE	SERIES	BODY	ENGINE	TRANS	TRIM	DESCRIPTION
		1	2, 6	L	51, 52, 54, 55, 56				
7	5103 810AA	1	2, 6	L	01, 02, 06				SEAT BELT, Buckle Half Passenger Side
		1	2, 6	L	11, 12, 14, 15, 16				Passenger Side
		1	2, 6	L	51, 52, 54, 55, 56				Passenger Side
		1	3, 7	L	02, 06				Passenger Side
		1	3, 7	L	12, 15, 16				Passenger Side
	5103 811AA	1	2, 6	L	11, 12, 14, 15, 16				Driver Side
		1	2, 6	L	51, 52, 54, 55, 56				Driver Side
		1	3, 7	L	12, 15, 16				Driver Side
	5124 982AA	1	2, 6	L	11, 12, 14, 15, 16				With Luxury Bucket, Passenger Side
		1	2, 6	L	51, 52, 54, 55, 56				With Luxury Bucket, Passenger Side
		1	3, 7	L	12, 15, 16				With Luxury Bucket, Passenger Side
-8	5103 834AA-	2	2, 6	L	51, 52, 54, 55, 56				SEAT BELT, Retractor
	5125 014AA-	2	2, 6	L	11, 12, 14, 15, 16				

Refer to Model Legend Information Bookmark

AR = Use as required - = Non illustrated part # = New this model year

March 3, 2006

« RETURN TO GROUP INDEX

Seat Belt - Second Row
Figure IVA-720

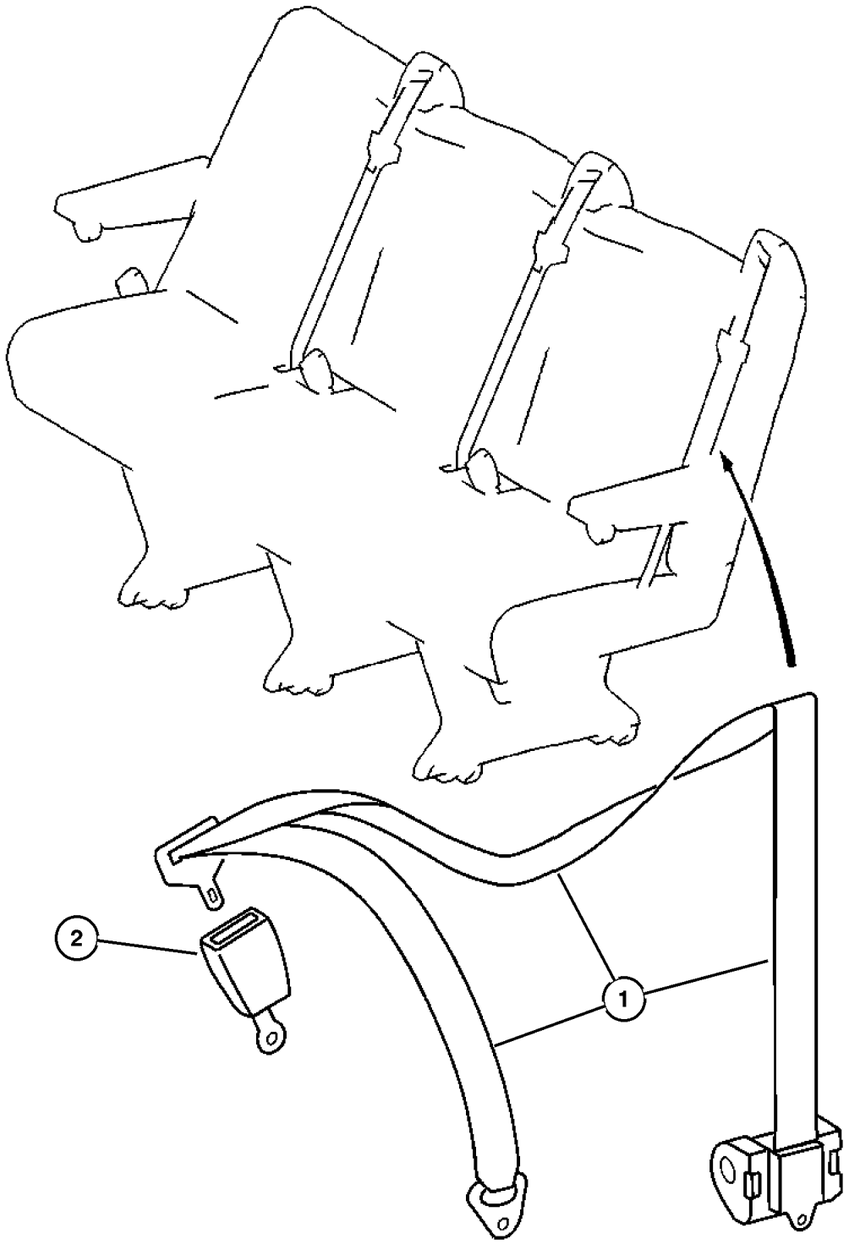

ITEM	PART NUMBER	QTY	LINE	SERIES	BODY	ENGINE	TRANS	TRIM	DESCRIPTION
1									SEAT BELT, Retractor
	5103 834AA	3	2, 6	L	51, 52, 54, 55, 56				
	5125 014AA	2	2, 6	L	11, 12, 14, 15, 16				
		2	3, 7	L	12, 15, 16				
2									SEAT BELT, Buckle Half
	5104 502AA	2	2, 6	L	11, 12, 14, 15, 16				
		2	2, 6	L	51, 52, 54, 55, 56				
		2	3, 7	L	12, 15, 16				

Refer to Model Legend Information Bookmark

AR = Use as required - = Non illustrated part # = New this model year

March 3, 2006

« RETURN TO GROUP INDEX

Group – SVA

Body Sheet Metal Except Doors

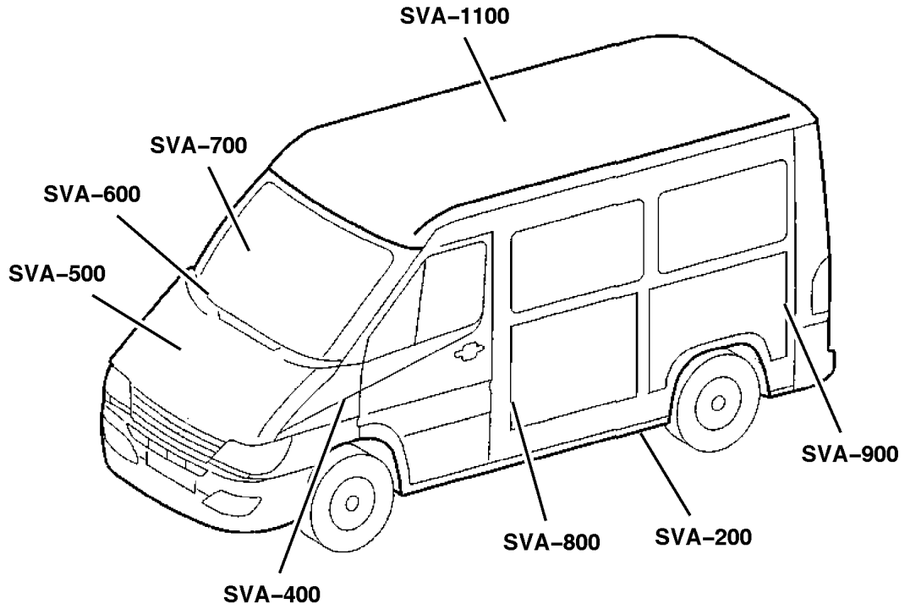

Group – SVA

Body Sheet Metal Except Doors

SVA–1100 Roof Panels	**SVA–1200** Sunroof		
SVA–200 Floor Pans	**SVA–300** Plugs	**SVA–400** Front Fenders	**SVA–500** Hood and Hood Release
SVA–600 Cowl and Dash Panel	**SVA–700** Glass and Rear View Mirror	**SVA–800** Aperture Panel	**SVA–900** Quarter Panel and Pillars

GROUP SVA - Body Sheet Metal Except Doors

Illustration Title	Group-Fig. No.
Floor Pans	
Front Floor Pan	Fig. SVA-210
Rear Floor Pan	Fig. SVA-220
Plugs	
Plugs	Fig. SVA-310
Front Fenders	
Front Fender	Fig. SVA-410
Fender Splash Guards	Fig. SVA-420
Hood and Hood Release	
Hood and Hood Release	Fig. SVA-510
Cowl and Dash Panel	
Cowl and Dash	Fig. SVA-610
Inner Paneling in Cab, Cowl	Fig. SVA-620
Glass and Rear View MIrror	
Windshield, Backlite and Rear View Mirror	Fig. SVA-710
Front Right Side Sliding Glass	Fig. SVA-720
Side Glass, Fixed	Fig. SVA-730
Aperture Panel	
Front Aperture, Inner, Left	Fig. SVA-810
Front Aperture, Outer, Left	Fig. SVA-820
Front Aperture, Inner, Right	Fig. SVA-830
Front Aperture, Outer, Right	Fig. SVA-840
Quarter Panel and Pillars	
Right Side Cargo Door Pillars & Wheelhouse	Fig. SVA-910
Right Side Panels, Cargo	Fig. SVA-920
Right Side Panels, Wagon	Fig. SVA-930
Left Side Cargo Door Pillars & Wheelhouse	Fig. SVA-940
Left Side Panels, Cargo	Fig. SVA-950
Left Side Panels, Wagon	Fig. SVA-960
Rear Splash Shield	Fig. SVA-970
Rear Step Panel	Fig. SVA-980
Partition Wall & Load Protection Grill	Fig. SVA-990
Roof Panels	
Low Roof Panel	Fig. SVA-1110
High Roof Panel	Fig. SVA-1120
Sunroof	
Manual Sunroof	Fig. SVA-1210
Fixed Sunroof	Fig. SVA-1220

Front Floor Pan
Figure SVA-210

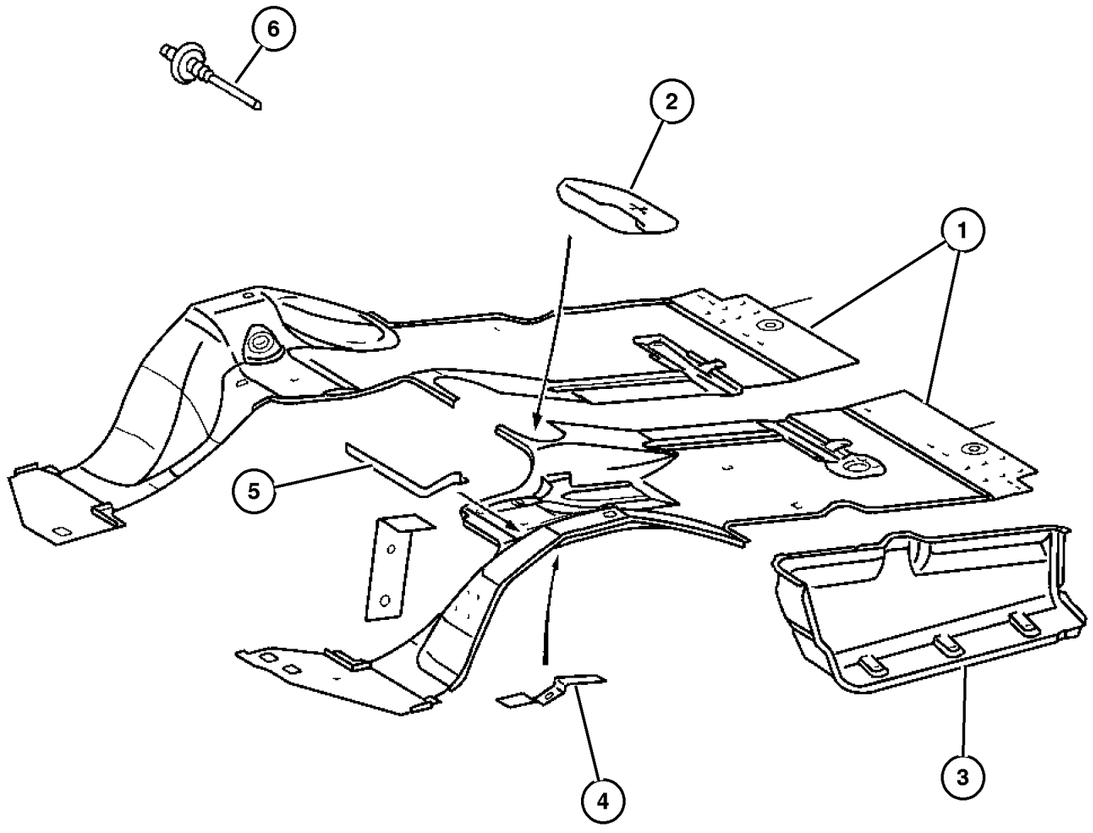

ITEM	PART NUMBER	QTY	LINE	SERIES	BODY	ENGINE	TRANS	TRIM	DESCRIPTION
1									PAD, Floor Pan
	5121 511AA	1	2, 6		01, 02, 06				
		1	2, 6		11, 12, 14, 15, 16				
		1	2, 6		51, 52, 54, 55, 56				
		1	3, 7		02, 06				
		1	3, 7		12, 15, 16				
2									ESCUTCHEON, Floor
	5121 510AA	1	2, 6		01, 02, 06				
		1	2, 6		11, 12, 14, 15, 16				
		1	2, 6		51, 52, 54, 55, 56				
		1	3, 7		02, 06				
		1	3, 7		12, 15, 16				
3									STEP PAD, Side Step
	5104 161AA	1	2, 6		01, 02, 06				Left
		1	2, 6		11, 12, 14, 15, 16				Left
		1	2, 6		51, 52, 54, 55, 56				Left
		1	3, 7		02, 06				Left
		1	3, 7		12, 15, 16				Left
	5121 571AA	1	2, 6		01, 02, 06				Right
		1	2, 6		11, 12, 14, 15, 16				Right
		1	2, 6		51, 52, 54, 55, 56				Right
		1	3, 7		02, 06				Right

Refer to Model Legend Information Bookmark

AR = Use as required - = Non illustrated part # = New this model year

March 3, 2006

« RETURN TO GROUP INDEX »

Front Floor Pan
Figure SVA-210

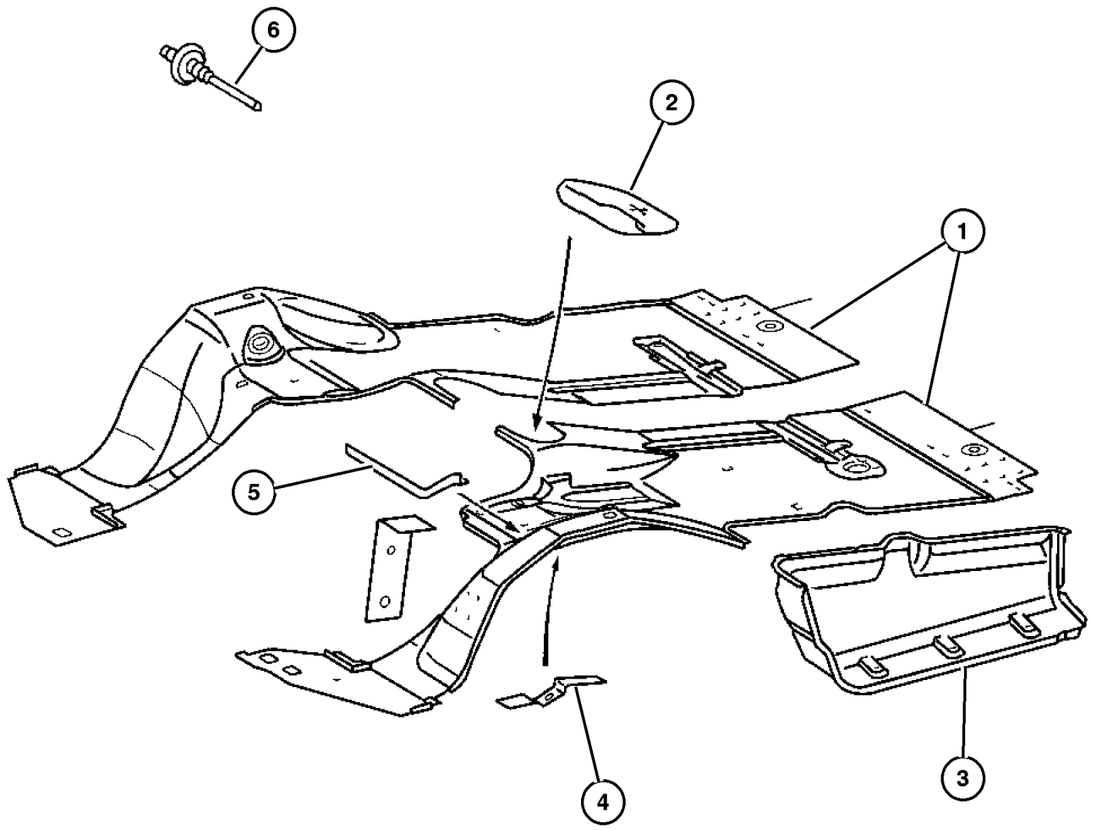

ITEM	PART NUMBER	QTY	LINE	SERIES	BODY	ENGINE	TRANS	TRIM	DESCRIPTION
		1	3, 7		12, 15, 16				Right
4									BRACKET, Floor Pan, Brake Cable
	5119 269AA	1	2, 6		01, 02, 06				
		1	2, 6		11, 12, 14, 15, 16				
		1	2, 6		51, 52, 54, 55, 56				
		1	3, 7		02, 06				
		1	3, 7		12, 15, 16				
5									PAD, Floor Pan
	5121 494AA	1	2, 6		01, 02, 06				Left
		1	2, 6		11, 12, 14, 15, 16				Left
		1	2, 6		51, 52, 54, 55, 56				Left
		1	3, 7		02, 06				Left
		1	3, 7		12, 15, 16				Left
	5121 495AA	1	2, 6		01, 02, 06				Right
		1	2, 6		11, 12, 14, 15, 16				Right
		1	2, 6		51, 52, 54, 55, 56				Right
		1	3, 7		02, 06				Right
		1	3, 7		12, 15, 16				Right
6									RIVET
	5133 847AA	99	2, 6		01, 02, 06				
		99	2, 6		11, 12, 14, 15, 16				

Refer to Model Legend Information Bookmark

AR = Use as required - = Non illustrated part # = New this model year

March 3, 2006

« RETURN TO GROUP INDEX

Front Floor Pan
Figure SVA-210

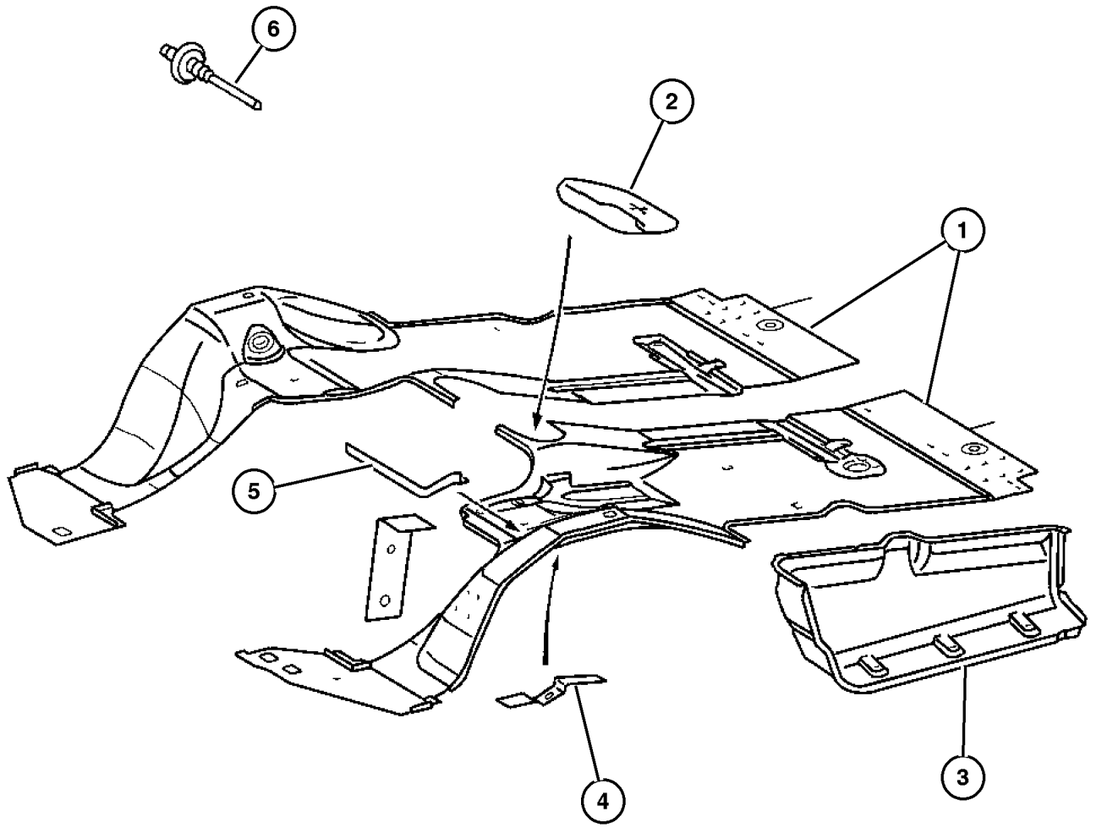

ITEM	PART NUMBER	QTY	LINE	SERIES	BODY	ENGINE	TRANS	TRIM	DESCRIPTION
		99	2, 6		51, 52, 54, 55, 56				
		99	3, 7		02, 06				
		99	3, 7		12, 15, 16				

Refer to Model Legend Information Bookmark

Rear Floor Pan
Figure SVA-220

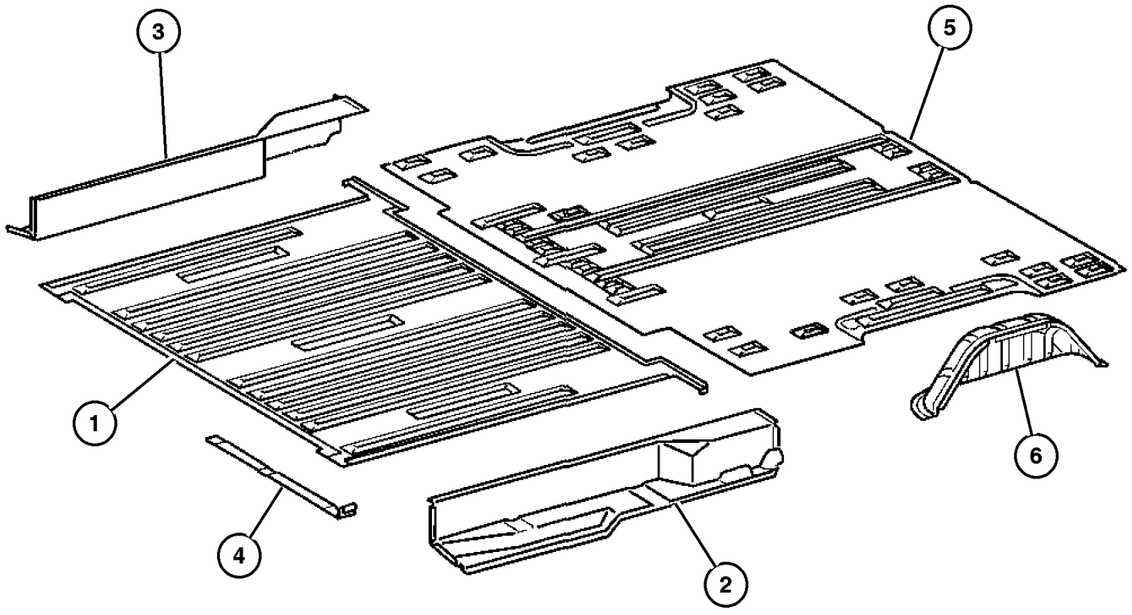

ITEM	PART NUMBER	QTY	LINE	SERIES	BODY	ENGINE	TRANS	TRIM	DESCRIPTION
Sales Codes:									
[CKZ] = Floor Covering, Rubber									
[CWC] = Cargo Partition									
[GKA] = Right Sliding Door									
[GKE] = Left Sliding Door									
1									PAN, Center Floor
	5121 536AA	1	2, 6		11, 12, 14, 15, 16				[GKE], Left Door Sliding
		1	2, 6		51, 52, 54, 55, 56				[GKE], Left Door Sliding
		1	3, 7		12, 15, 16				[GKE], Left Door Sliding
	5121 540AA	1	2, 6		11, 12, 14, 15, 16				[GKE], Left Door Sliding & [GKA], Right Door Sliding
		1	2, 6		51, 52, 54, 55, 56				[GKE], Left Door Sliding & [GKA], Right Door Sliding
		1	3, 7		12, 15, 16				[GKE], Left Door Sliding & [GKA], Right Door Sliding
	5121 544AA	1	2, 6		11, 12, 14, 15, 16				[GKA], Right Door Sliding
		1	2, 6		51, 52, 54, 55, 56				[GKA], Right Door Sliding
		1	3, 7		12, 15, 16				[GKA], Right Door Sliding
	5121 546AA	1	2, 6		11, 12, 14, 15, 16				[CWC], With Cargo Partition
		1	3, 7		12, 15, 16				[CWC], With Cargo Partition
2									PANEL, Side Step Well, Left
	5121 457AA	1	2, 6		11, 12, 14, 15, 16				[GKE], Left Door Sliding
		1	2, 6		51, 52, 54, 55, 56				[GKE], Left Door Sliding
		1	3, 7		12, 15, 16				[GKE], Left Door Sliding

Refer to Model Legend Information Bookmark

AR = Use as required - = Non illustrated part # = New this model year

March 3, 2006

« RETURN TO GROUP INDEX »

Rear Floor Pan
Figure SVA-220

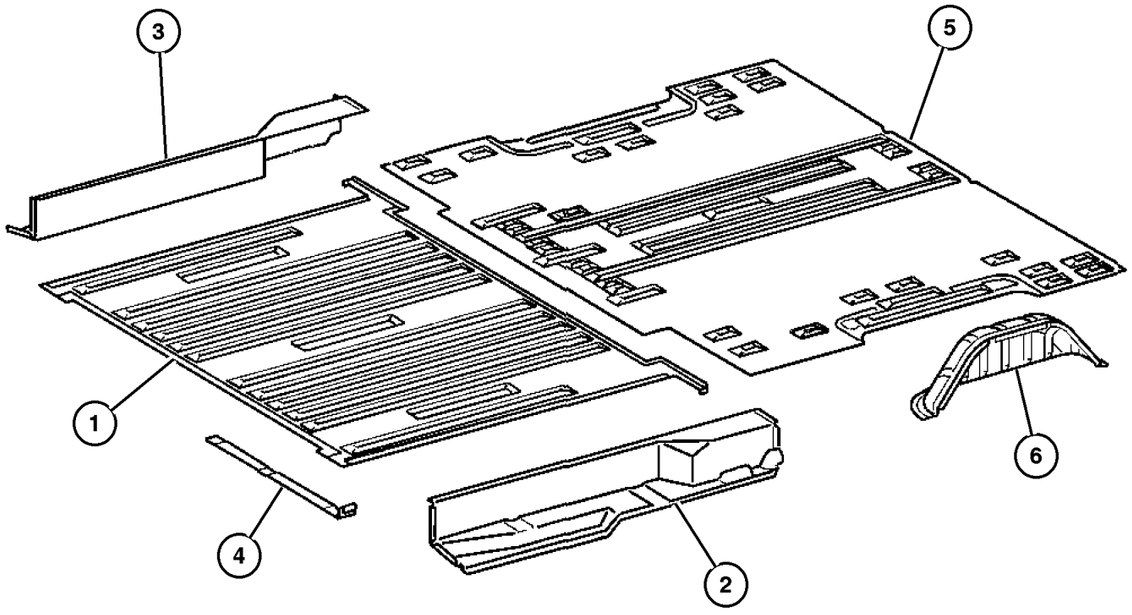

ITEM	PART NUMBER	QTY	LINE	SERIES	BODY	ENGINE	TRANS	TRIM	DESCRIPTION
	5121 461AA	1	2, 6		11, 12, 14, 15, 16				[GKE], Left Door Sliding & [CKZ], Floor Covering, Rubber
		1	2, 6		51, 52, 54, 55, 56				[GKE], Left Door Sliding & [CKZ], Floor Covering, Rubber
		1	3, 7		12, 15, 16				[GKE], Left Door Sliding & [CKZ], Floor Covering, Rubber
3									PANEL, Side Step Well, Right
	5104 158AA	1	2, 6		11, 12, 14, 15, 16				[GKA], Right Door Sliding
		1	2, 6		51, 52, 54, 55, 56				[GKA], Right Door Sliding
		1	3, 7		12, 15, 16				[GKA], Right Door Sliding
	5121 464AA	1	2, 6		11, 12, 14, 15, 16				[GKA], Right Door Sliding & [CKZ], Floor Covering, Rubber
		1	2, 6		51, 52, 54, 55, 56				[GKA], Right Door Sliding & [CKZ], Floor Covering, Rubber
		1	3, 7		12, 15, 16				[GKA], Right Door Sliding & [CKZ], Floor Covering, Rubber
4									BRACKET, Floor Pan, In Front of Central Entrance
	5121 501AA	2	2, 6		11, 12, 14, 15, 16				
		2	2, 6		51, 52, 54, 55, 56				
		2	3, 7		12, 15, 16				
5									PAN, Rear Floor
	5104 565AA	1	2, 6		56				158 Inch Wheelbase
	5121 474AA	1	3, 7		12, 15				140 Inch Wheelbase
	5121 476AA	1	3, 7		16				158 Inch Wheelbase
	5121 561AA	1	2, 6		12, 15				140 Inch Wheelbase
		1	2, 6		52, 55				140 Inch Wheelbase
	5121 563AA	1	2, 6		11, 14				118 Inch Wheelbase
		1	2, 6		51, 54				118 Inch Wheelbase
6									PANEL, Wheelhouse

Refer to Model Legend Information Bookmark

AR = Use as required - = Non illustrated part # = New this model year

March 3, 2006

« RETURN TO GROUP INDEX

« »

Rear Floor Pan
Figure SVA-220

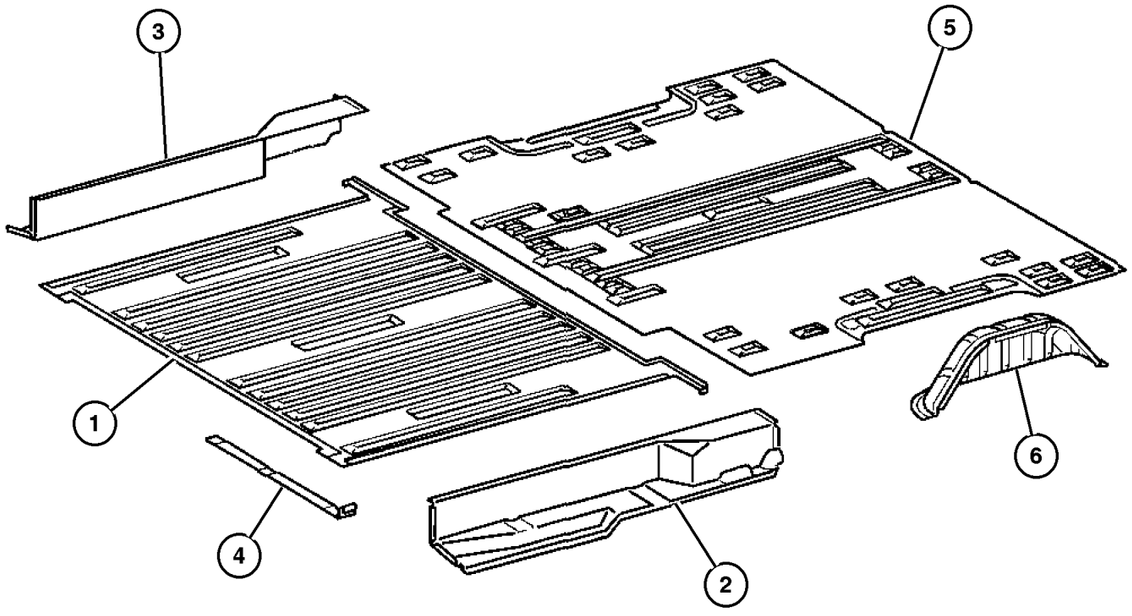

ITEM	PART NUMBER	QTY	LINE	SERIES	BODY	ENGINE	TRANS	TRIM	DESCRIPTION
	5104 162AA	2	2, 6		11, 12, 14, 15, 16				
		2	2, 6		51, 52, 54, 55, 56				
		2	3, 7		12, 15, 16				

Refer to Model Legend Information Bookmark

Plugs
Figure SVA-310

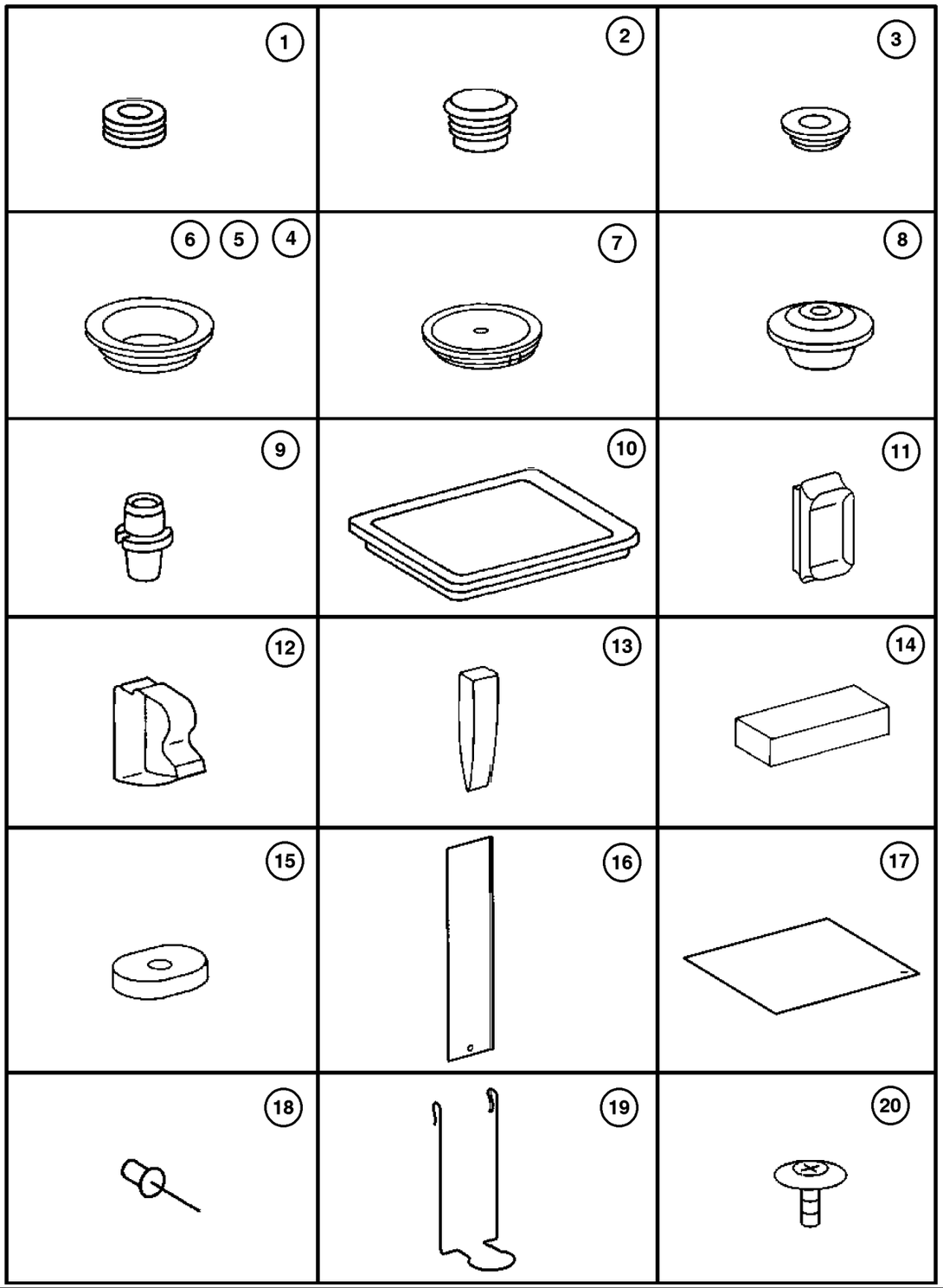

ITEM	PART NUMBER	QTY	LINE	SERIES	BODY	ENGINE	TRANS	TRIM	DESCRIPTION
1									PLUG, Expansion, Fire Wall, Engine Compartment
	5133 557AA	1	2, 6		01, 02, 06				
		1	2, 6		11, 12, 14, 15, 16				
		1	2, 6		51, 52, 54, 55, 56				
	5133 657AA	1	3, 7		12, 15, 16				
2									PLUG, Body, Water Drain, 22mm
	5125 994AA	2	2, 6		01, 02, 06				
		2	2, 6		11, 12, 14, 15, 16				
		2	2, 6		51, 52, 54, 55, 56				
		2	3, 7		02, 06				
		2	3, 7		12, 15, 16				
3									PLUG, Door Contact Switch
	5098 417AA	1	2, 6		11, 12, 14, 15, 16				
		2	2, 6		51, 52, 54, 55, 56				
		2	3, 7		12, 15, 16				
4									PLUG, W/S Washer Reservoir Hole
	5098 441AA	2	3, 7		12, 15, 16				
		2	2, 6		11, 12, 14, 15, 16				
5									GROMMET, Body
	5125 511AA	2	2, 6		11, 12, 14, 15, 16				
		2	3, 7		12, 15, 16				
6									PLUG, Body

Refer to Model Legend Information Bookmark

AR = Use as required - = Non illustrated part # = New this model year

March 3, 2006

« RETURN TO GROUP INDEX

»

Plugs
Figure SVA-310

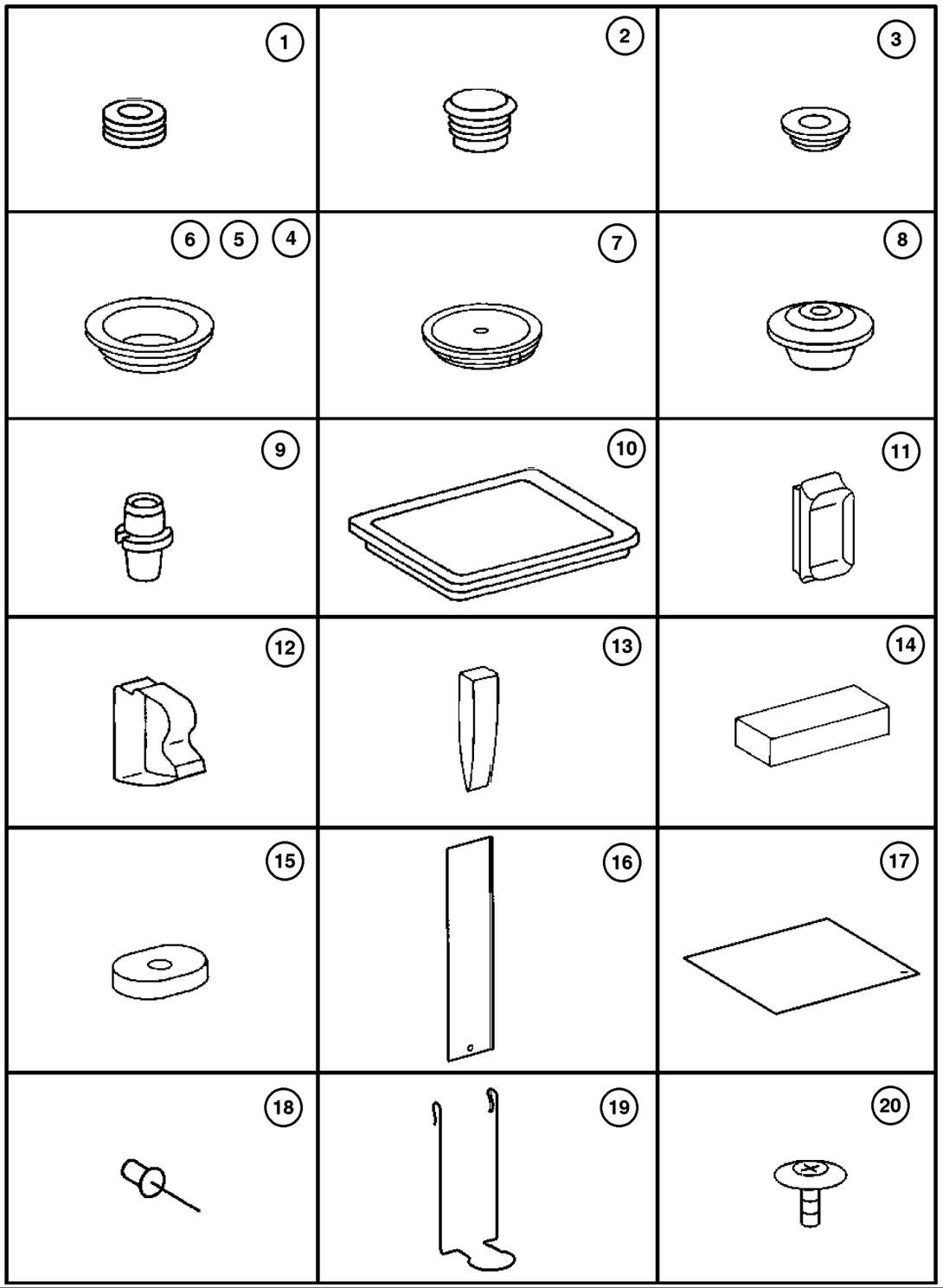

ITEM	PART NUMBER	QTY	LINE	SERIES	BODY	ENGINE	TRANS	TRIM	DESCRIPTION
	5098 415AA	4	2, 6		01, 02, 06				
		8	2, 6		12, 15				
		6	2, 6		11, 14				
		8	2, 6		52, 55				
		6	2, 6		51, 54				
		4	3, 7		02, 06				
		8	3, 7		12, 15				
		6	3, 7		16				
7									PLUG, Body, [89mm]
	5125 518AA	4	2, 6		11, 14				
		6	2, 6		12, 15				
		12	2, 6		16				
		6	2, 6		51, 54				
		6	2, 6		52, 55				
		12	2, 6		56				
		6	3, 7		12, 15				
		12	3, 7		16				
8									PLUG
	5103 947AA	2	2, 6		11, 12, 14, 15, 16				
		2	2, 6		51, 52, 54, 55, 56				
		2	3, 7		12, 15, 16				
9									DRAIN SPOUT, Drain Tube, [13mm]
	5133 556AA	2	2, 6		01, 02, 06				
		2	2, 6		11, 12, 14, 15, 16				
		2	2, 6		51, 52, 54, 55, 56				
		2	3, 7		02, 06				
		2	3, 7		12, 15, 16				
10									PLUG, Body, Water Drain
	5126 003AA	2	2, 6		11, 12, 14, 15, 16				

Refer to Model Legend Information Bookmark

AR = Use as required - = Non illustrated part # = New this model year

March 3, 2006

« RETURN TO GROUP INDEX

Plugs
Figure SVA-310

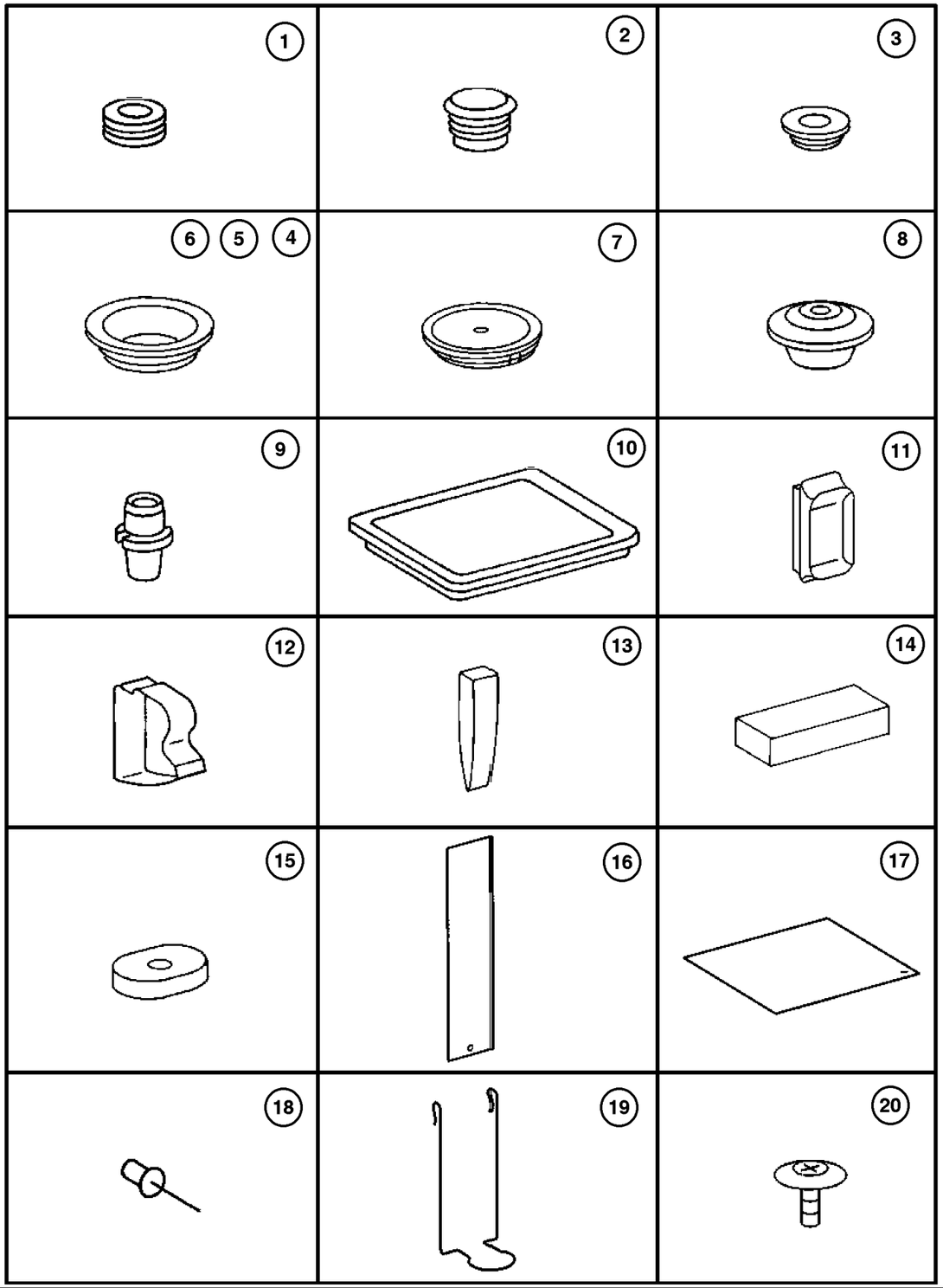

ITEM	PART NUMBER	QTY	LINE	SERIES	BODY	ENGINE	TRANS	TRIM	DESCRIPTION
		2	2, 6		51, 52,				
					54, 55,				
					56				
		1	3, 7		12, 15,				
					16				
11									PLUG, Expansion
	5125 514AA	4	2, 6		11, 12,				
					14, 15,				
					16				
		4	2, 6		51, 52,				
					54, 55,				
					56				
		4	3, 7		12, 15,				
					16				
12									SEAL
	5124 765AA	2	2, 6		01, 02,				
					06				
		4	2, 6		11, 12,				
					14, 15,				
					16				
		4	2, 6		51, 52,				
					54, 55,				
					56				
		2	3, 7		02, 06				
		4	3, 7		12, 15,				
					16				
13									SEAL
	5124 768AA	2	2, 6		11, 12,				
					14, 15,				
					16				
		2	2, 6		51, 52,				
					54, 55,				
					56				
		2	3, 7		12, 15,				
					16				
14									SEAL, B-Pillar, Right
	5124 771AA	1	2, 6		01, 02,				
					06				
		1	2, 6		11, 12,				
					14, 15,				
					16				
		1	2, 6		51, 52,				
					54, 55,				
					56				
		1	3, 7		02, 06				

Refer to Model Legend Information Bookmark

AR = Use as required - = Non illustrated part # = New this model year

March 3, 2006

« RETURN TO GROUP INDEX

« »

Plugs
Figure SVA-310

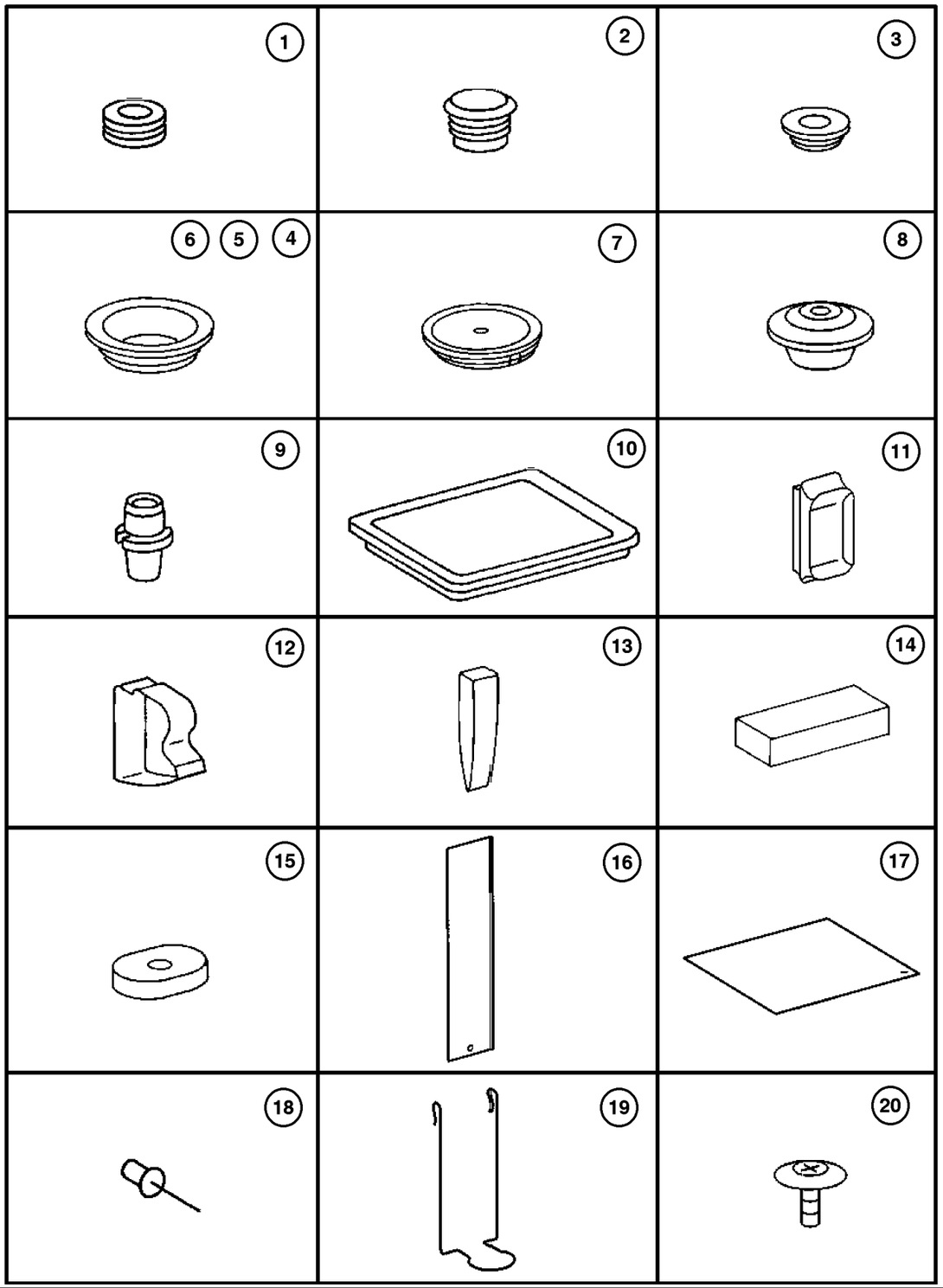

ITEM	PART NUMBER	QTY	LINE	SERIES	BODY	ENGINE	TRANS	TRIM	DESCRIPTION
		1	3, 7		12, 15, 16				
15									GROMMET
	5124 774AA	1	2, 6		01, 02, 06				Oval Shape
		1	2, 6		11, 12, 14, 15, 16				Oval Shape
		1	2, 6		51, 52, 54, 55, 56				Oval Shape
		1	3, 7		02, 06				Oval Shape
		1	3, 7		12, 15, 16				Oval Shape
	5124 775AA	1	2, 6		01, 02, 06				Circular Solid
		1	2, 6		11, 12, 14, 15, 16				Circular Solid
		1	2, 6		51, 52, 54, 55, 56				Circular Solid
		1	3, 7		02, 06				Circular Solid
		1	3, 7		12, 15, 16				Circular Solid
	5124 777AA	1	2, 6		01, 02, 06				Circular With Hole
		1	2, 6		11, 12, 14, 15, 16				Circular With Hole
		1	2, 6		51, 52, 54, 55, 56				Circular With Hole
		1	3, 7		02, 06				Circular With Hole
		1	3, 7		12, 15, 16				Circular With Hole
16									COVER, Cable Guide Duct
	5122 651AA	1	2, 6		01, 02, 06				
		1	2, 6		11, 12, 14, 15, 16				
		1	2, 6		51, 52, 54, 55, 56				

Refer to Model Legend Information Bookmark

Plugs
Figure SVA-310

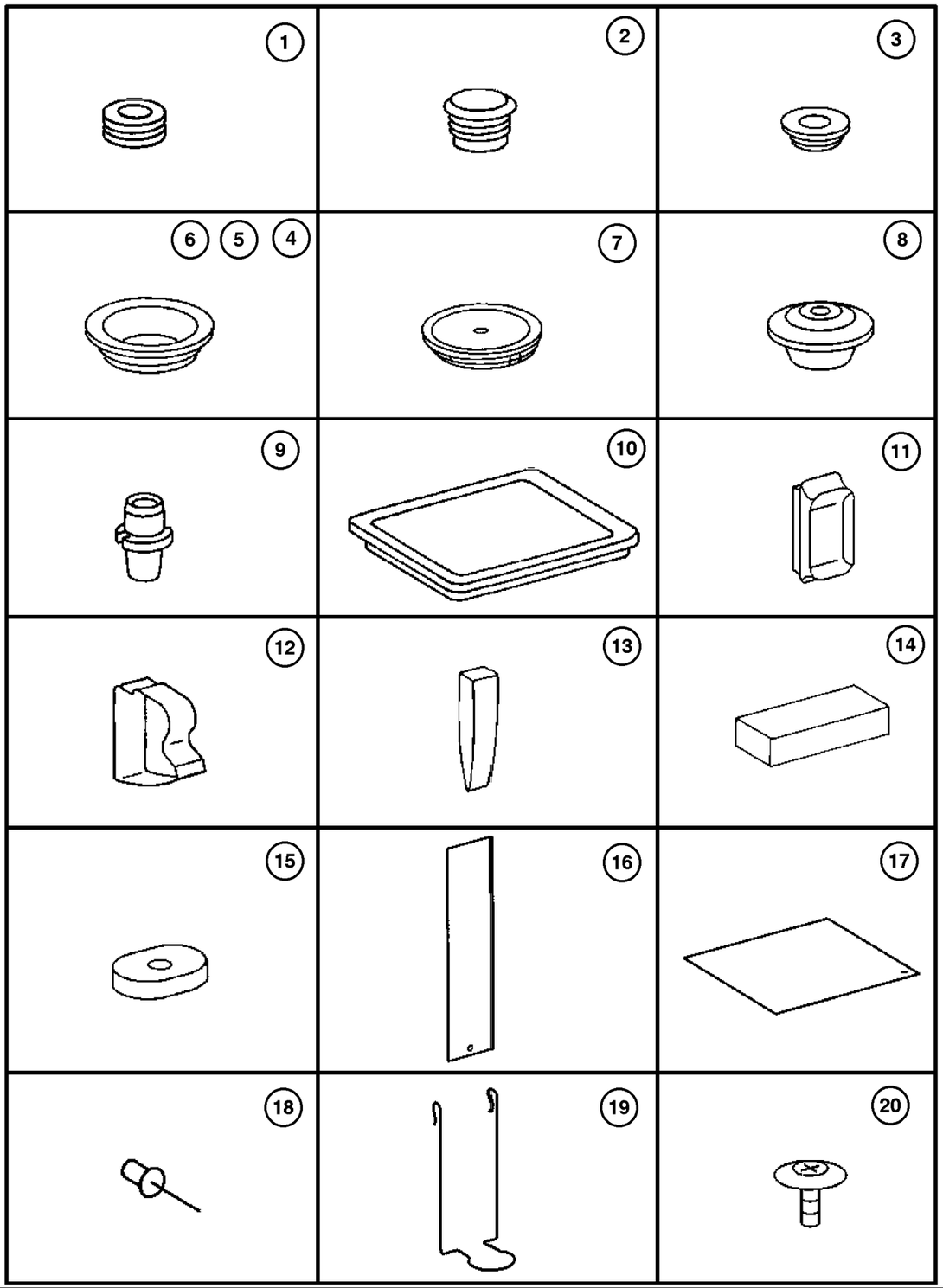

ITEM	PART NUMBER	QTY	LINE	SERIES	BODY	ENGINE	TRANS	TRIM	DESCRIPTION
		1	3, 7		02, 06				
		1	3, 7		12, 15, 16				
17									COVER, Cable Guide Duct
	5122 648AA	1	2, 6		01, 02, 06				
		1	2, 6		11, 12, 14, 15, 16				
		1	2, 6		51, 52, 54, 55, 56				
		1	3, 7		02, 06				
		1	3, 7		12, 15, 16				
18									RIVET, Blind Bulb, Cable Guide Duct [4.0x8]
	5133 417AA	3	2, 6		01, 02, 06				
		3	2, 6		11, 12, 14, 15, 16				
		3	2, 6		51, 52, 54, 55, 56				
		3	3, 7		02, 06				
		3	3, 7		12, 15, 16				
19									CLIP, Instrument Panel
	5133 558AA	2	2, 6		11, 12, 14, 15, 16				
		2	2, 6		51, 52, 54, 55, 56				
		1	3, 7		02, 06				
		1	3, 7		12, 15, 16				
20									PLUG, Body
	5125 982AA	1	2, 6		11, 12, 14, 15, 16				
		1	2, 6		51, 52, 54, 55, 56				

Refer to Model Legend Information Bookmark

AR = Use as required - = Non illustrated part # = New this model year

March 3, 2006

« RETURN TO GROUP INDEX

Plugs
Figure SVA-310

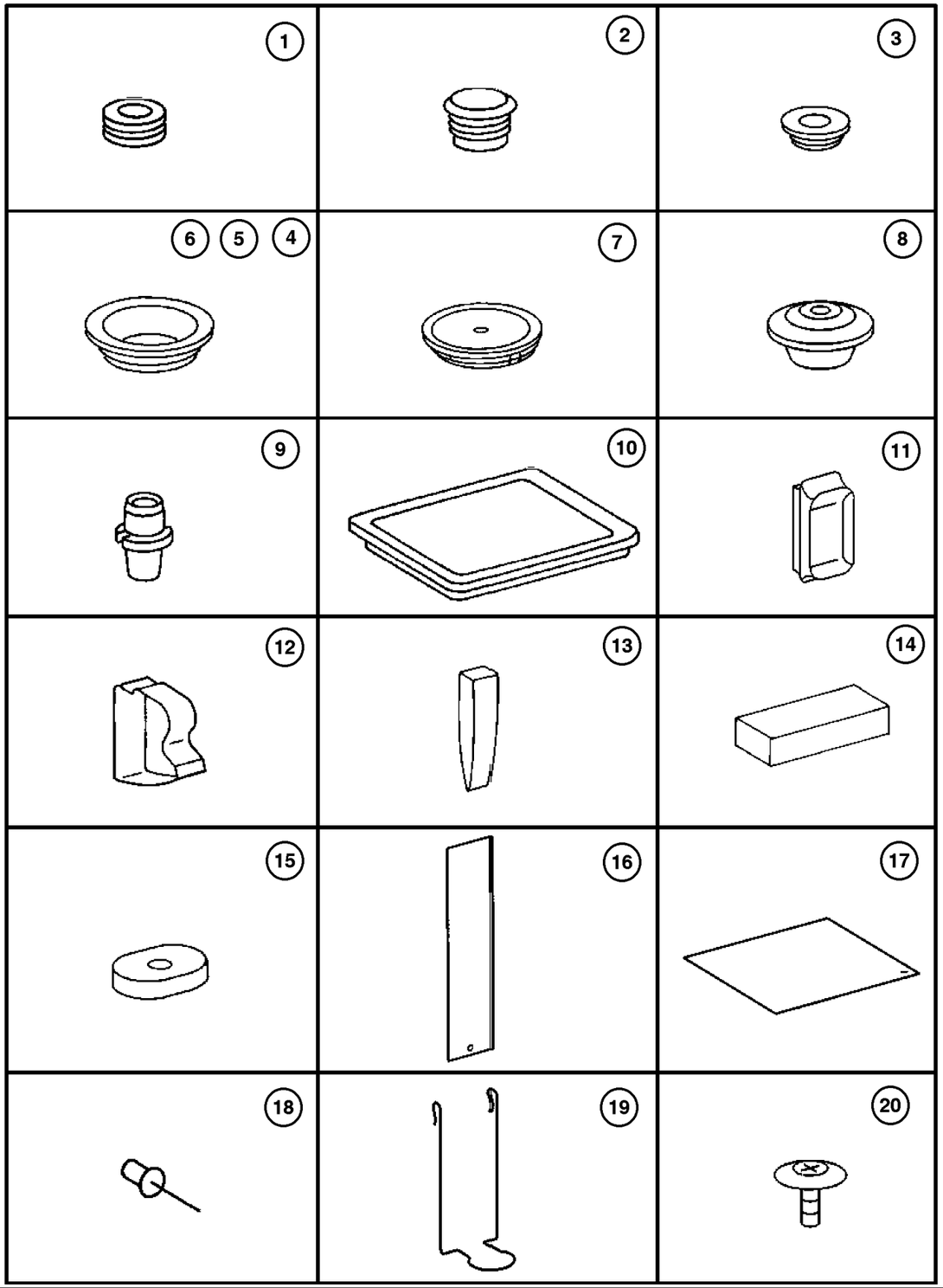

ITEM	PART NUMBER	QTY	LINE	SERIES	BODY	ENGINE	TRANS	TRIM	DESCRIPTION
		1	3, 7		12, 15, 16				

Refer to Model Legend Information Bookmark

AR = Use as required - = Non illustrated part # = New this model year

March 3, 2006

« RETURN TO GROUP INDEX

«

Front Fender
Figure SVA-410

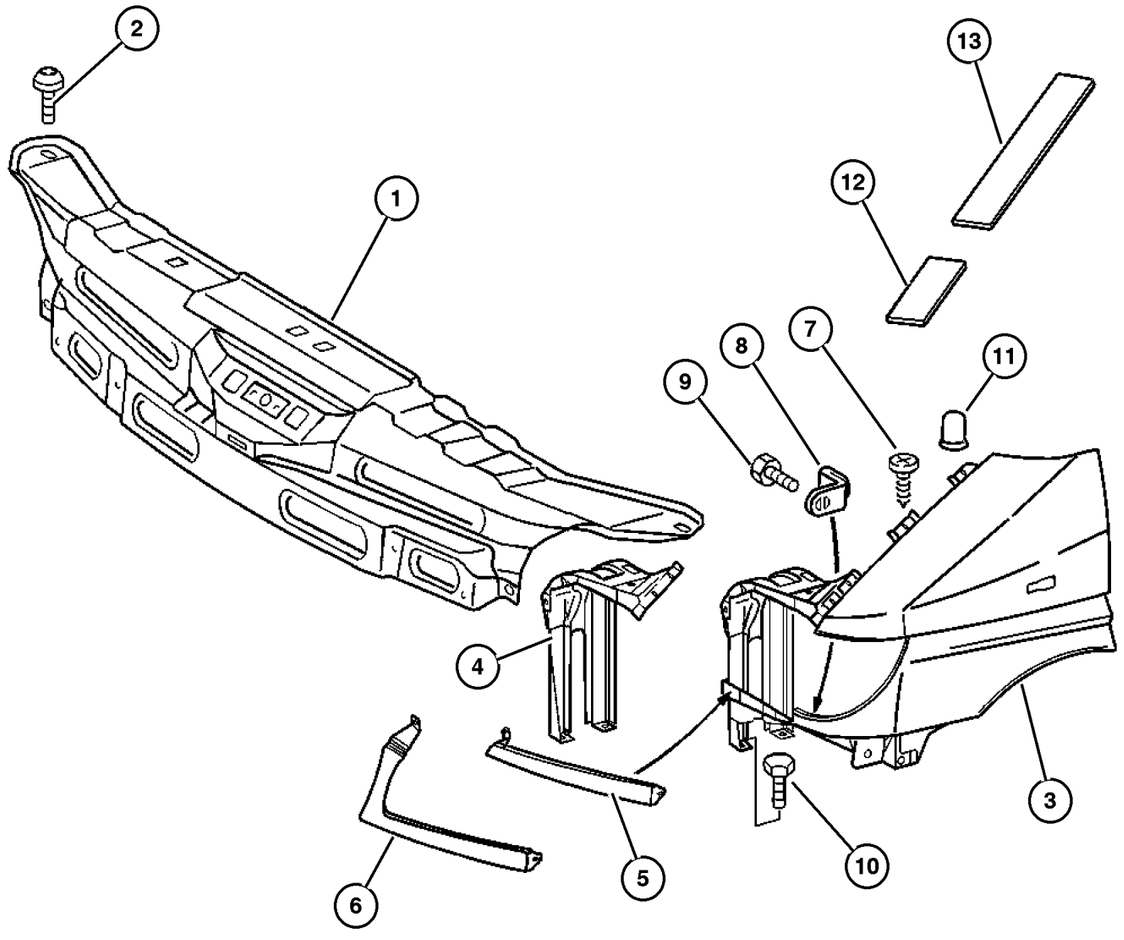

ITEM	PART NUMBER	QTY	LINE	SERIES	BODY	ENGINE	TRANS	TRIM	DESCRIPTION
1									CROSSMEMBER, Radiator
	5104 504AA	1	2, 6		01, 02, 06				
		1	2, 6		11, 12, 14, 15, 16				
		1	2, 6		51, 52, 54, 55, 56				
		1	3, 7		02, 06				
		1	3, 7		12, 15, 16				
2									SCREW
	5103 713AA	4	2, 6		01, 02, 06				
		4	2, 6		11, 12, 14, 15, 16				
		4	2, 6		51, 52, 54, 55, 56				
		4	3, 7		02, 06				
		4	3, 7		12, 15, 16				
3									FENDER, Front
	5104 180AA	1	2, 6		01, 02, 06				Left
		1	2, 6		11, 12, 14, 15, 16				Left
		1	2, 6		51, 52, 54, 55, 56				Left
		1	3, 7		02, 06				Left
		1	3, 7		12, 15, 16				Left
	5104 181AA	1	2, 6		01, 02, 06				Right
		1	2, 6		11, 12, 14, 15, 16				Right
		1	2, 6		51, 52, 54, 55, 56				Right
		1	3, 7		02, 06				Right

Refer to Model Legend Information Bookmark

Front Fender
Figure SVA-410

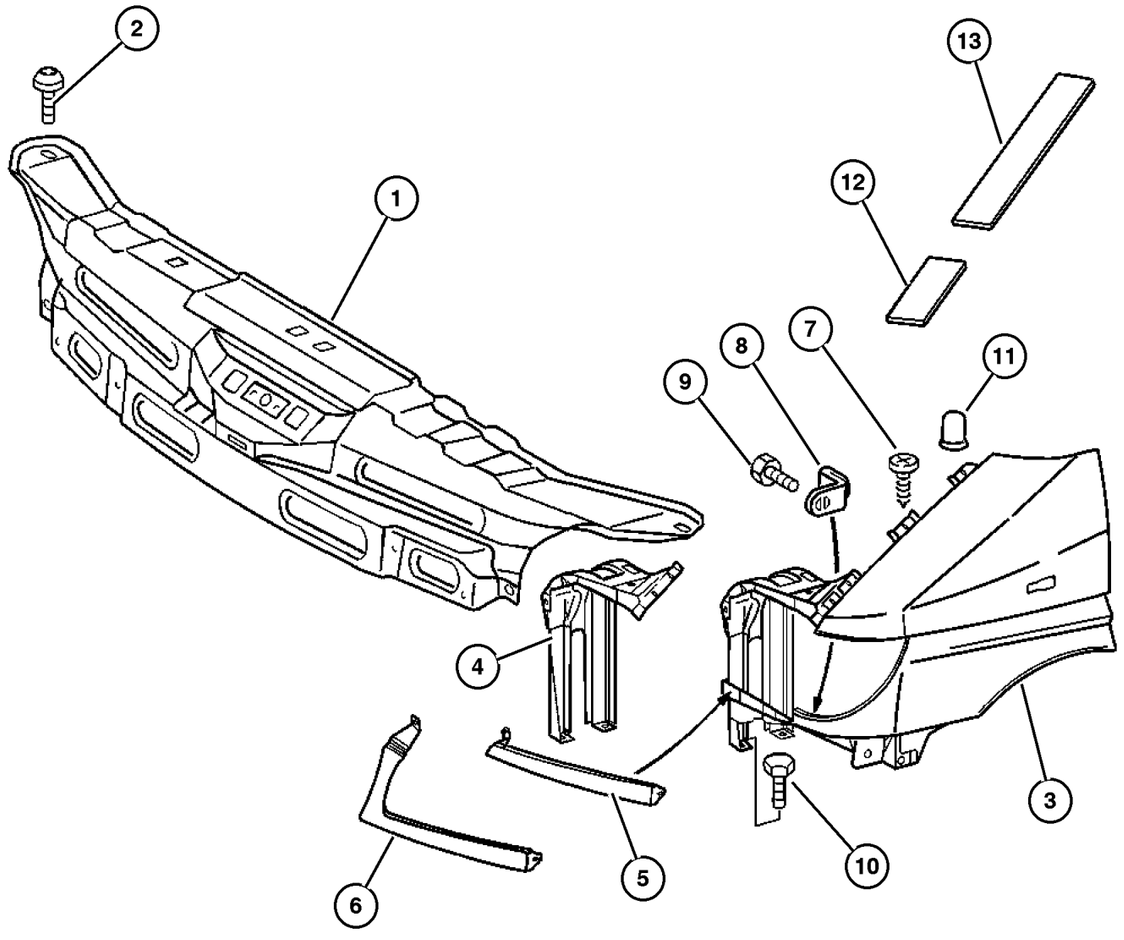

ITEM	PART NUMBER	QTY	LINE	SERIES	BODY	ENGINE	TRANS	TRIM	DESCRIPTION
		1	3, 7		12, 15, 16				Right
4									SUPPORT, Radiator Closure Panel
	5104 165AA	1	2, 6		01, 02, 06				Left
		1	2, 6		11, 12, 14, 15, 16				Left
		1	2, 6		51, 52, 54, 55, 56				Left
		1	3, 7		02, 06				Left
		1	3, 7		12, 15, 16				Left
	5104 169AA	1	2, 6		01, 02, 06				Right
		1	2, 6		11, 12, 14, 15, 16				Right
		1	2, 6		51, 52, 54, 55, 56				Right
		1	3, 7		02, 06				Right
		1	3, 7		12, 15, 16				Right
5									BEZEL, Headlamp, Dodge
	5104 210AA	1	2		01, 02, 06				Left
		1	2		11, 12, 14, 15, 16				Left
		1	2		51, 52, 54, 55, 56				Left
		1	3		02, 06				
		1	3		12, 15, 16				
	5104 213AA	1	2		01, 02, 06				Right
		1	2		11, 12, 14, 15, 16				Right
		1	2		51, 52, 54, 55, 56				Right

Refer to Model Legend Information Bookmark

AR = Use as required - = Non illustrated part # = New this model year

March 3, 2006

Front Fender
Figure SVA-410

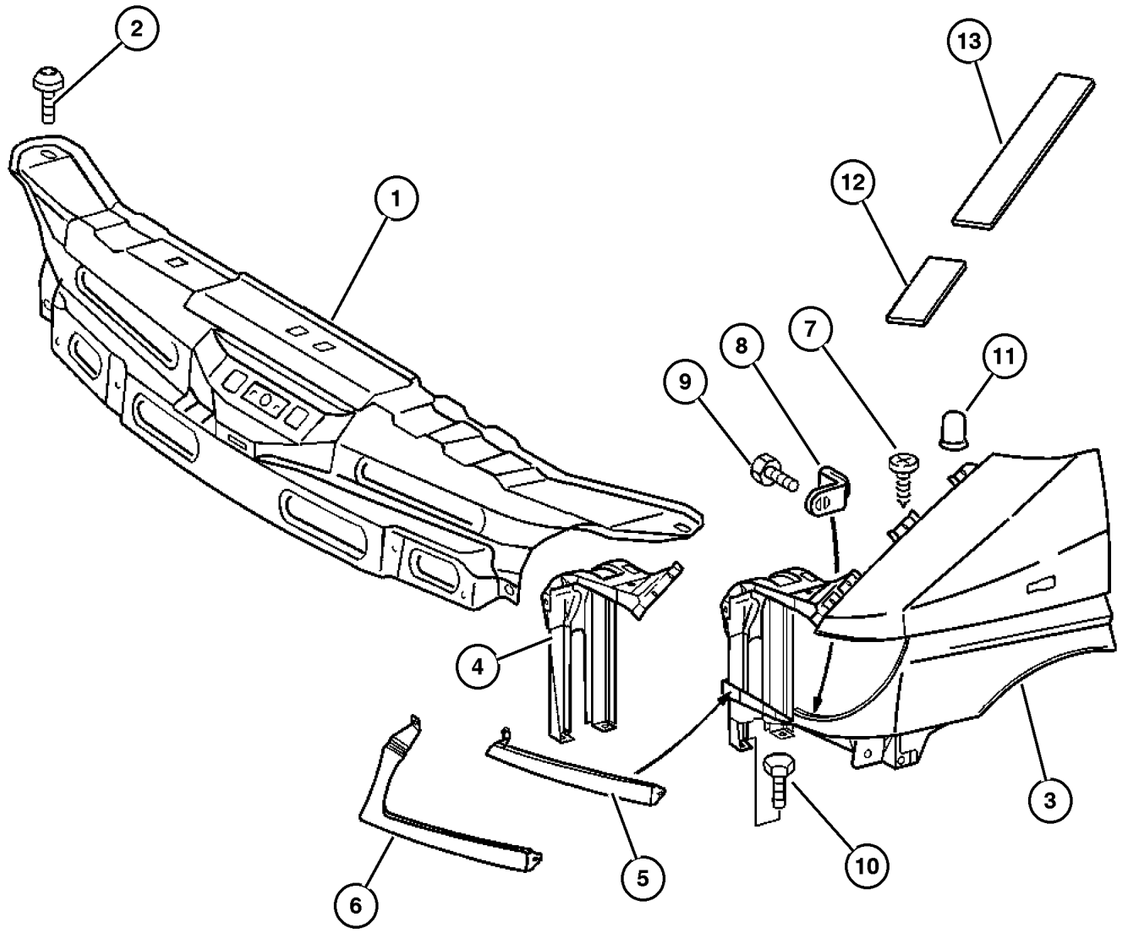

ITEM	PART NUMBER	QTY	LINE	SERIES	BODY	ENGINE	TRANS	TRIM	DESCRIPTION
		1	3		02, 06				Right
		1	3		12, 15, 16				Right
6									BEZEL, Headlamp, Freightliner
	5104 216AA	1	6		01, 02, 06				Left
		1	6		11, 12, 14, 15, 16				Left
		1	6		51, 52, 54, 55, 56				
		1	7		02, 06				
		1	7		12, 15, 16				
	5104 217AA	1	6		01, 02, 06				Right
		1	6		11, 12, 14, 15, 16				Right
		1	6		51, 52, 54, 55, 56				Right
		1	7		02, 06				Right
		1	7		12, 15, 16				Right
7									SCREW
	6104 581AA	7	2, 6		01, 02, 06				
		7	2, 6		11, 12, 14, 15, 16				
		7	2, 6		51, 52, 54, 55, 56				
		7	3, 7		02, 06				
		7	3, 7		12, 15, 16				
8									RETAINER
	5104 527AA	1	2, 6		01, 02, 06				
		1	2, 6		11, 12, 14, 15, 16				

Refer to Model Legend Information Bookmark

AR = Use as required - = Non illustrated part # = New this model year

March 3, 2006

Front Fender
Figure SVA-410

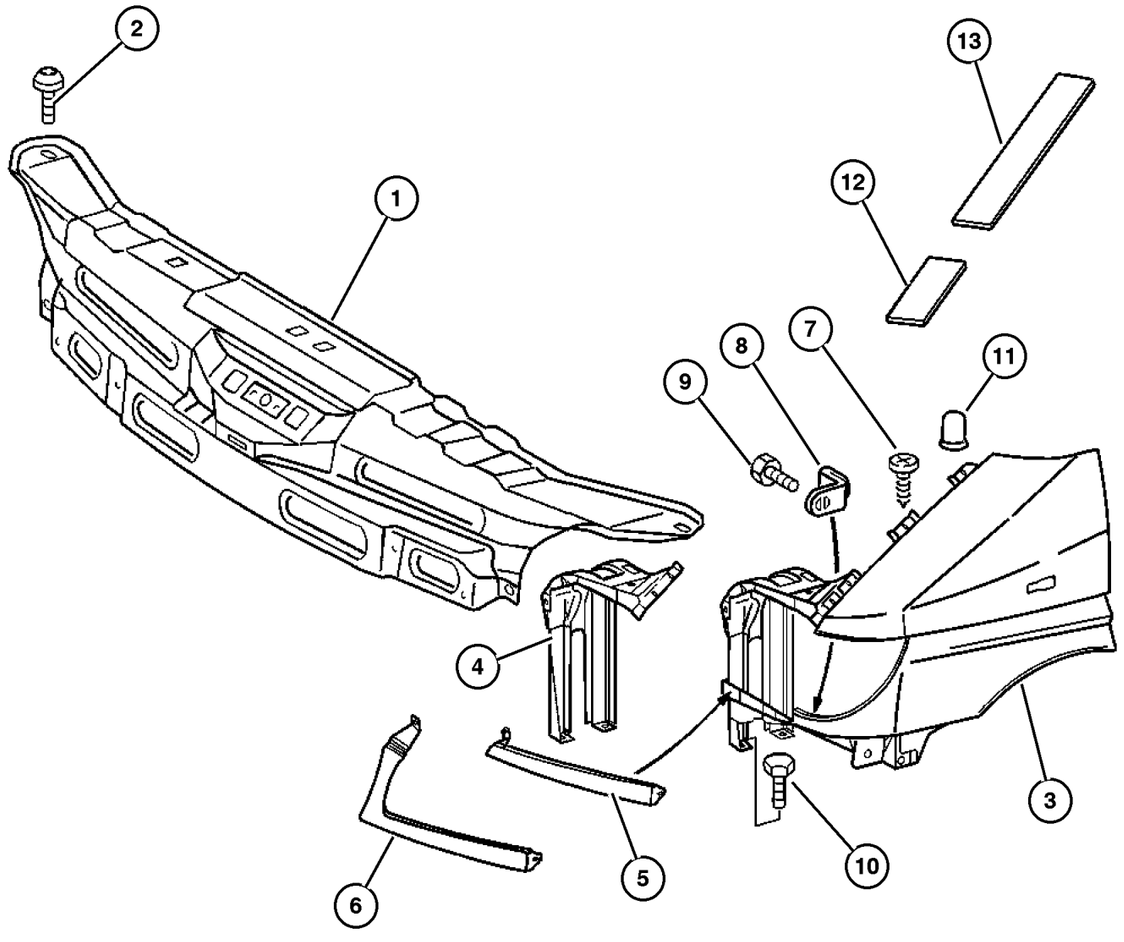

ITEM	PART NUMBER	QTY	LINE	SERIES	BODY	ENGINE	TRANS	TRIM	DESCRIPTION
		1	2, 6		51, 52,				
					54, 55,				
					56				
		1	3, 7		02, 06				
		1	3, 7		12, 15,				
					16				
9									SCREW, Tapping
	6104 574AA	3	2, 6		01, 02,				
					06				
		3	2, 6		11, 12,				
					14, 15,				
					16				
		3	2, 6		51, 52,				
					54, 55,				
					56				
		2	3, 7		12, 15,				
					16				
		2	3, 7		02, 06				
10									SCREW
	6104 022AA	1	2, 6		01, 02,				
					06				
		1	2, 6		11, 12,				
					14, 15,				
					16				
		1	2, 6		51, 52,				
					54, 55,				
					56				
		1	3, 7		02, 06				
		1	3, 7		12, 15,				
					16				
11									CAP, Protective
	5104 537AA	1	2, 6		01, 02,				
					06				
		1	2, 6		11, 12,				
					14, 15,				
					16				
		1	2, 6		51, 52,				
					54, 55,				
					56				
		1	3, 7		02, 06				
		1	3, 7		12, 15,				
					16				
12									SEAL, Fender To Cowl
	5121 446AA	1	2, 6		01, 02,				
					06				

Refer to Model Legend Information Bookmark

AR = Use as required - = Non illustrated part # = New this model year

March 3, 2006

« RETURN TO GROUP INDEX

Front Fender
Figure SVA-410

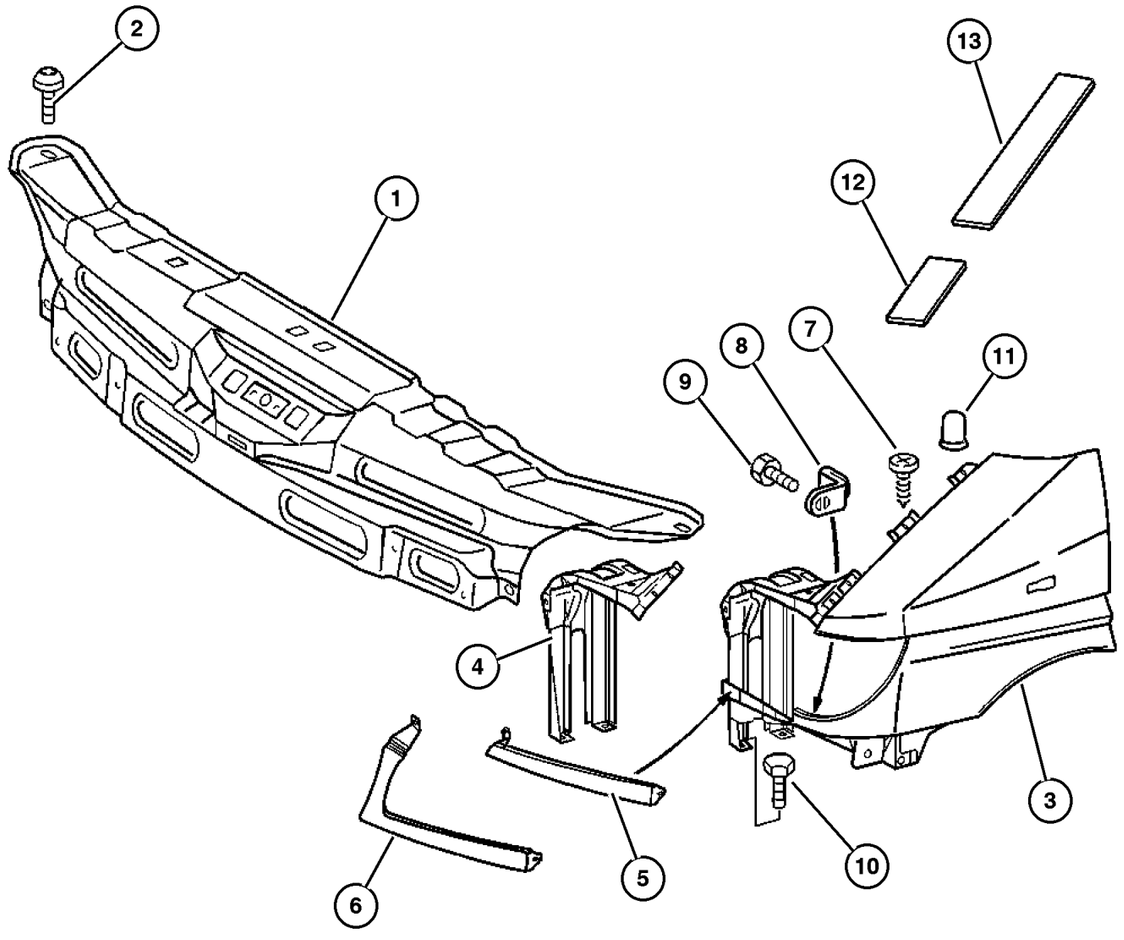

ITEM	PART NUMBER	QTY	LINE	SERIES	BODY	ENGINE	TRANS	TRIM	DESCRIPTION
		1	2, 6		11, 12, 14, 15, 16				
		1	2, 6		51, 52, 54, 55, 56				
		1	3, 7		02, 06				
		1	3, 7		12, 15, 16				
13									SEAL, Fender To Cowl
	5121 446AA	1	2, 6		01, 02, 06				
		1	2, 6		11, 12, 14, 15, 16				
		1	2, 6		51, 52, 54, 55, 56				
		1	3, 7		02, 06				
		1	3, 7		12, 15, 16				

Refer to Model Legend Information Bookmark

Fender Splash Guards
Figure SVA-420

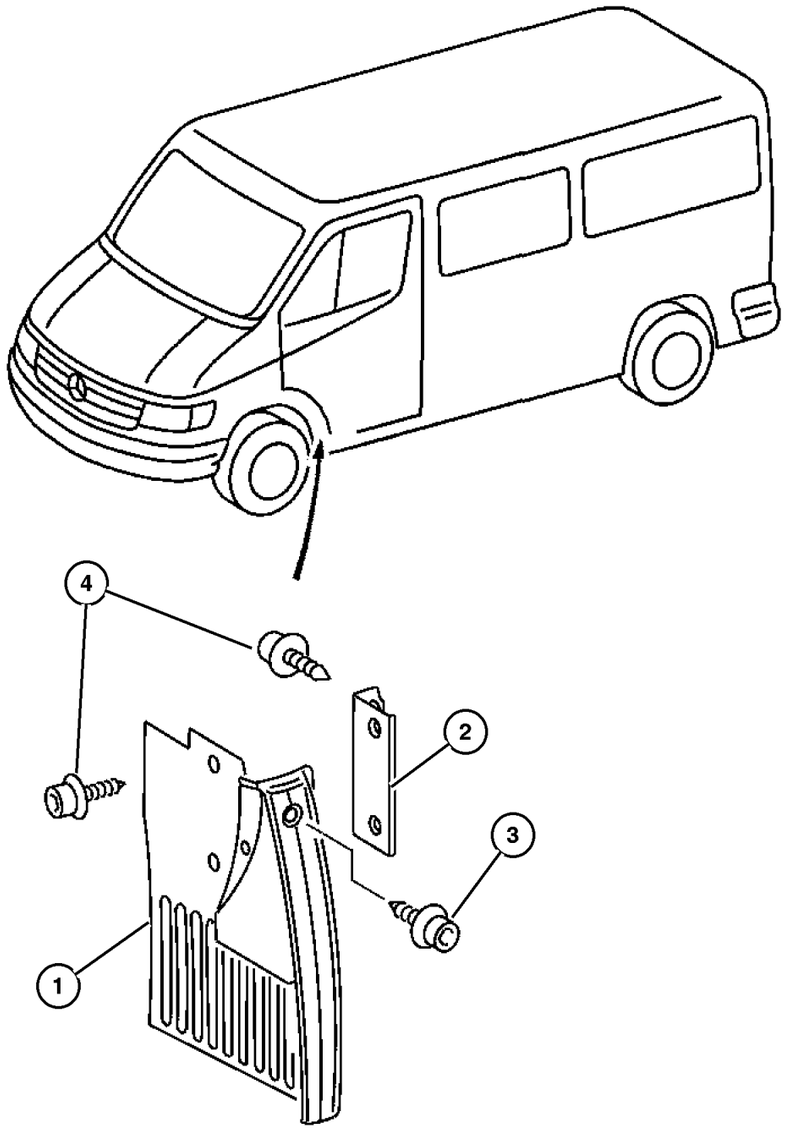

ITEM	PART NUMBER	QTY	LINE	SERIES	BODY	ENGINE	TRANS	TRIM	DESCRIPTION
1									GUARD, Splash
	5104 518AA	1	2, 6		01, 02, 06				Left
		1	2, 6		11, 12, 14, 15, 16				Left
		1	2, 6		51, 52, 54, 55, 56				Left
		1	3, 7		02, 06				Left
		1	3, 7		12, 15, 16				Left
	5104 521AA	1	2, 6		01, 02, 06				Right
		1	2, 6		11, 12, 14, 15, 16				Right
		1	2, 6		51, 52, 54, 55, 56				Right
		1	3, 7		02, 06				Right
		1	3, 7		12, 15, 16				Right
	5132 502AA	1	2, 6		01, 02, 06				With 16 Inch Wheels, Left
		1	2, 6		11, 12, 14, 15, 16				With 16 Inch Wheels, Left
		1	2, 6		51, 52, 54, 55, 56				With 16 Inch Wheels, Left
	5132 504AA	1	2, 6		01, 02, 06				With 16 Inch Wheels, Right
		1	2, 6		11, 12, 14, 15, 16				With 16 Inch Wheels, Right
		1	2, 6		51, 52, 54, 55, 56				With 16 Inch Wheels, Right
2									BRACKET
	5104 519AA	1	2, 6		01, 02, 06				
		1	2, 6		11, 12, 14, 15, 16				

Refer to Model Legend Information Bookmark

AR = Use as required - = Non illustrated part # = New this model year

March 3, 2006

« RETURN TO GROUP INDEX

»

Fender Splash Guards
Figure SVA-420

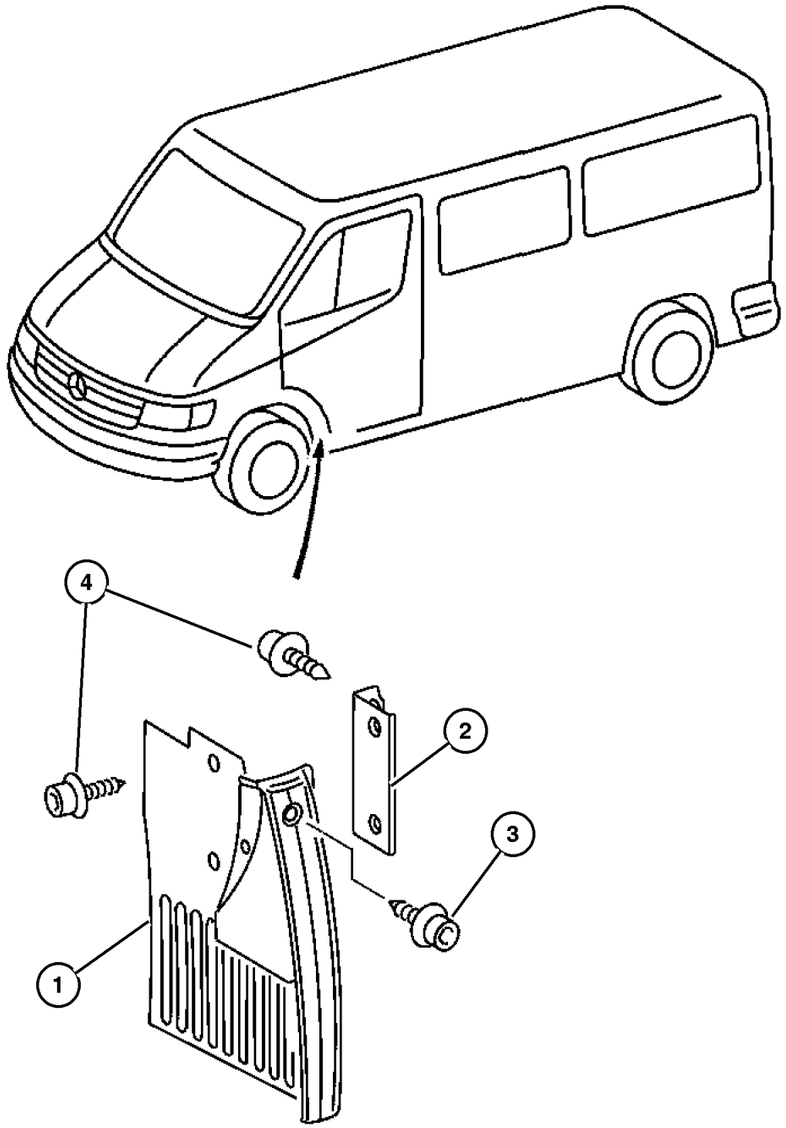

ITEM	PART NUMBER	QTY	LINE	SERIES	BODY	ENGINE	TRANS	TRIM	DESCRIPTION
		1	2, 6		51, 52, 54, 55, 56				
		1	3, 7		02, 06				
		1	3, 7		12, 15, 16				
3	6104 582AA	2	2, 6		01, 02, 06				SCREW
		2	2, 6		11, 12, 14, 15, 16				
		2	2, 6		51, 52, 54, 55, 56				
		2	3, 7		02, 06				
		2	3, 7		12, 15, 16				
4	6104 581AA	7	2, 6		01, 02, 06				SCREW
		1	2, 6		11, 12, 14, 15, 16				
		1	2, 6		51, 52, 54, 55, 56				
		1	3, 7		02, 06				
		1	3, 7		12, 15, 16				

Refer to Model Legend Information Bookmark

Hood and Hood Release
Figure SVA-510

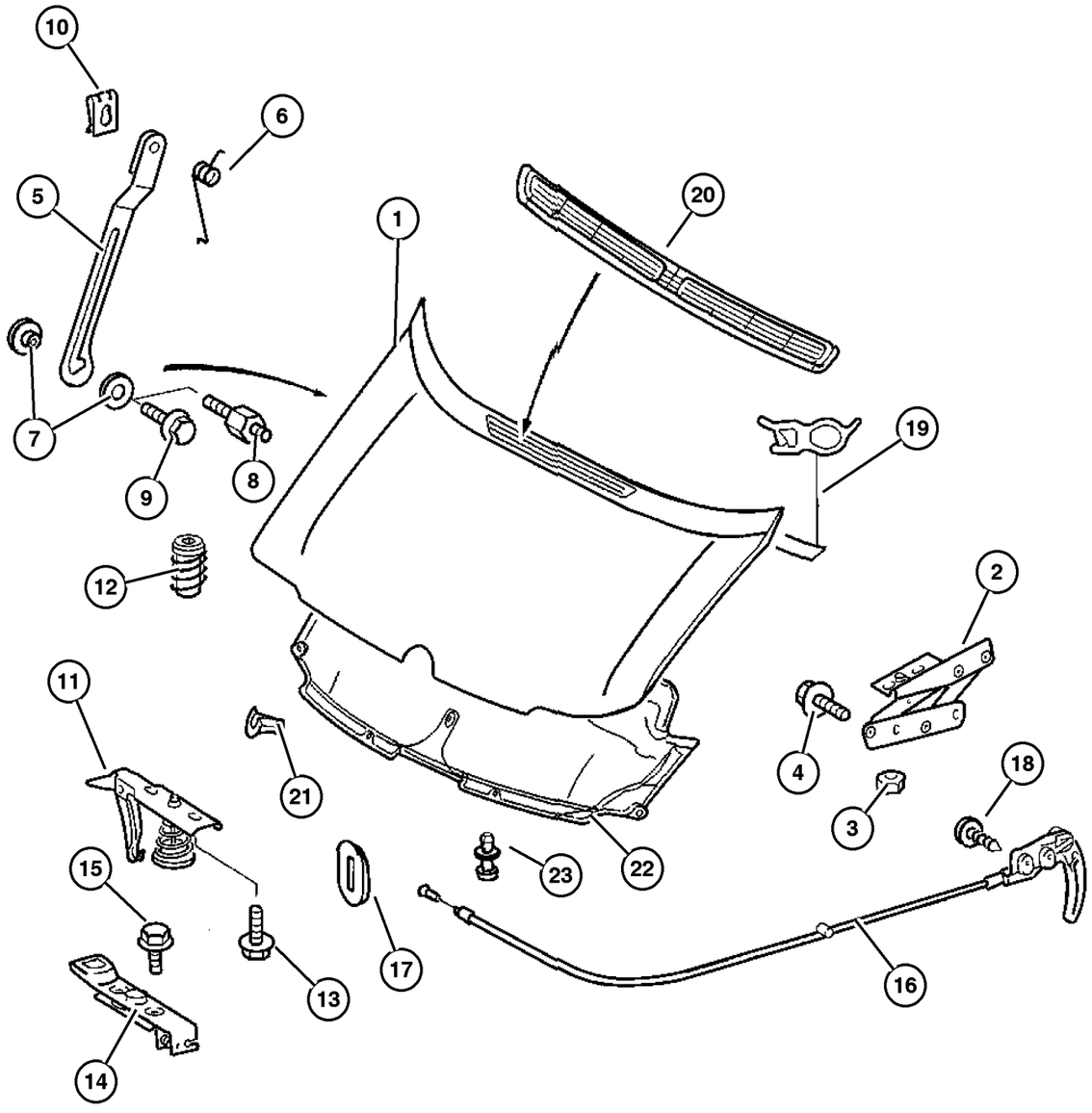

ITEM	PART NUMBER	QTY	LINE	SERIES	BODY	ENGINE	TRANS	TRIM	DESCRIPTION
1									HOOD
	5104 402AB	1	2, 6		01, 02, 06				
		1	2, 6		11, 12, 14, 15, 16				
		1	2, 6		51, 52, 54, 55, 56				
		1	3, 7		02, 06				
		1	3, 7		12, 15, 16				
2									HINGE, Hood
	5104 404AA	1	2, 6		01, 02, 06				Left
		1	2, 6		11, 12, 14, 15, 16				Left
		1	2, 6		51, 52, 54, 55, 56				Left
		1	3, 7		02, 06				Left
		1	3, 7		12, 15, 16				Left
	5104 406AA	1	2, 6		01, 02, 06				Right
		1	2, 6		11, 12, 14, 15, 16				Right
		1	2, 6		51, 52, 54, 55, 56				Right
		1	3, 7		02, 06				Right
		1	3, 7		12, 15, 16				Right
3									NUT
	5103 731AA	4	2, 6		01, 02, 06				
		4	2, 6		11, 12, 14, 15, 16				
		4	2, 6		51, 52, 54, 55, 56				
		4	3, 7		02, 06				

Refer to Model Legend Information Bookmark

AR = Use as required - = Non illustrated part # = New this model year

March 3, 2006

« RETURN TO GROUP INDEX

»

Hood and Hood Release
Figure SVA-510

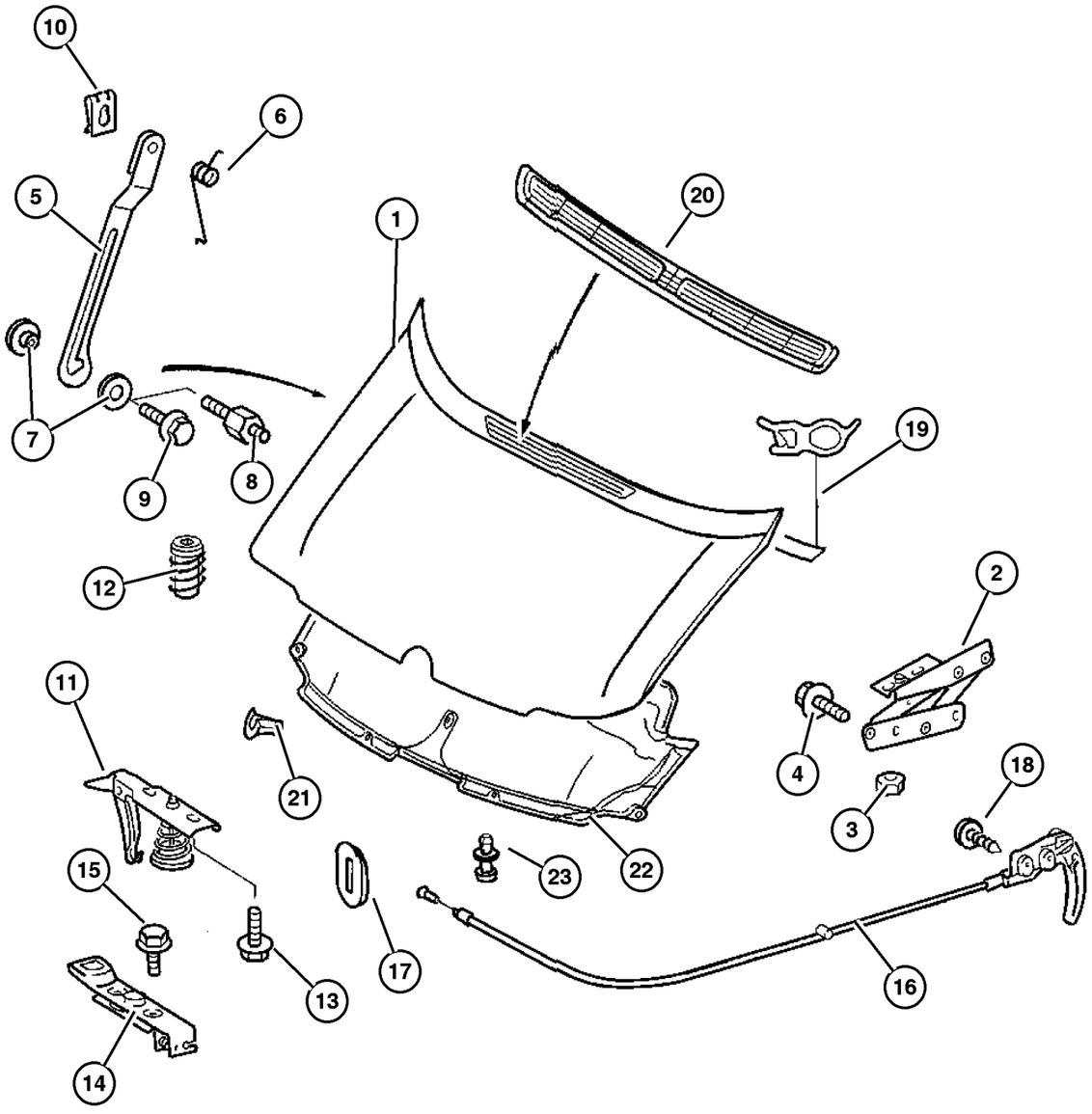

ITEM	PART NUMBER	QTY	LINE	SERIES	BODY	ENGINE	TRANS	TRIM	DESCRIPTION
		4	3, 7		12, 15, 16				
4									SCREW
	6104 022AA	1	2, 6		01, 02, 06				
		1	2, 6		11, 12, 14, 15, 16				
		1	2, 6		51, 52, 54, 55, 56				
		1	3, 7		02, 06				
		1	3, 7		12, 15, 16				
		3	2, 3, 6, 7						
5									PROP, Hood
	5104 407AA	1	2, 6		01, 02, 06				
		1	2, 6		11, 12, 14, 15, 16				
		1	2, 6		51, 52, 54, 55, 56				
		1	3, 7		02, 06				
		1	3, 7		12, 15, 16				
6									SPRING
	5104 546AA	1	2, 6		01, 02, 06				
		1	2, 6		11, 12, 14, 15, 16				
		1	2, 6		51, 52, 54, 55, 56				
		1	3, 7		02, 06				
		1	3, 7		12, 15, 16				
7									BUSHING, Hood Prop Rod Pivot
	5104 545AA	2	2, 6		01, 02, 06				
		2	2, 6		11, 12, 14, 15, 16				

Refer to Model Legend Information Bookmark

AR = Use as required - = Non illustrated part # = New this model year

March 3, 2006

Hood and Hood Release
Figure SVA-510

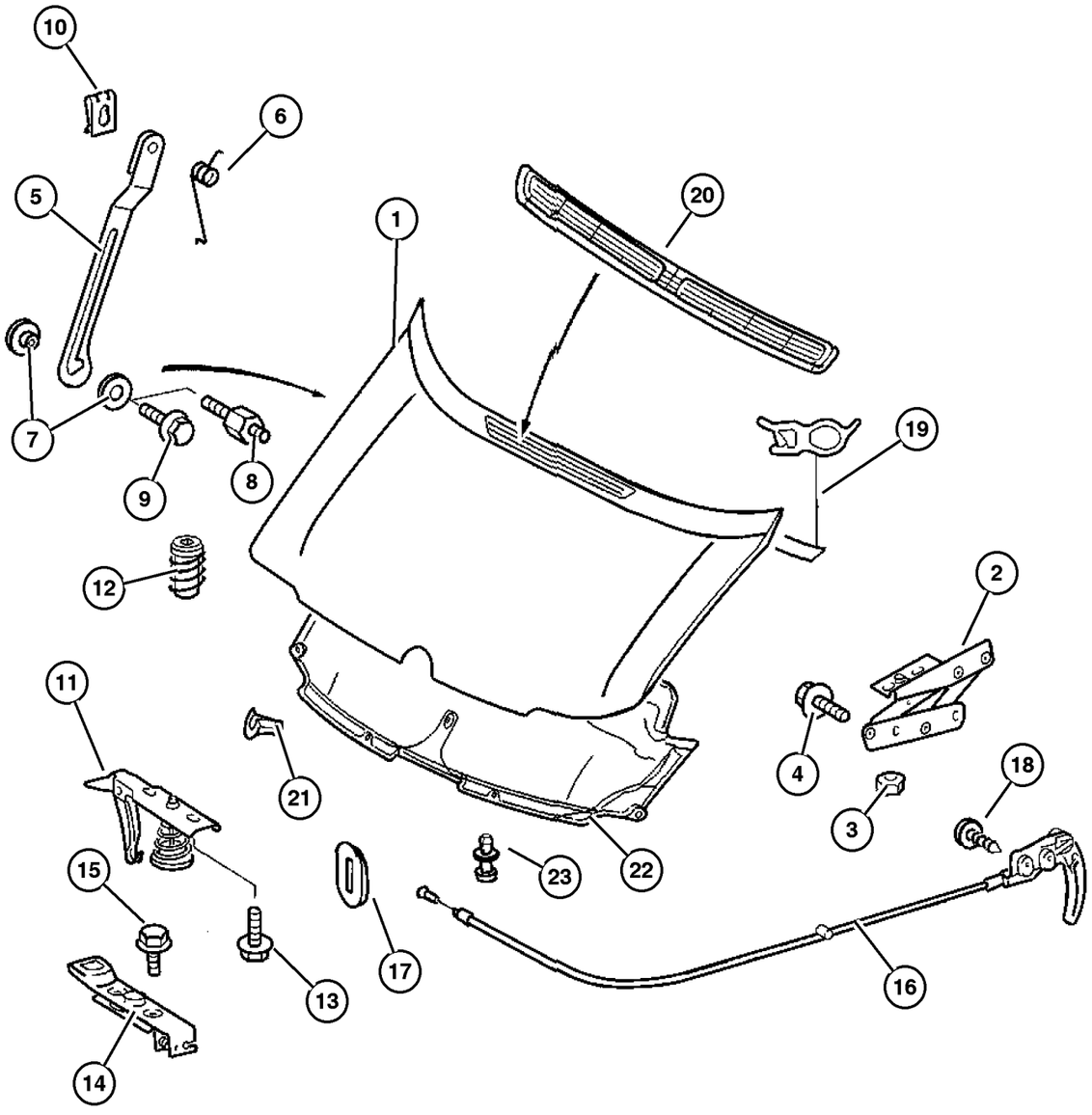

ITEM	PART NUMBER	QTY	LINE	SERIES	BODY	ENGINE	TRANS	TRIM	DESCRIPTION
		2	2, 6		51, 52, 54, 55, 56				
		2	3, 7		02, 06				
		2	3, 7		12, 15, 16				
8	5104 542AA	1	2, 6		01, 02, 06				SCREW
		1	2, 6		11, 12, 14, 15, 16				
		1	2, 6		51, 52, 54, 55, 56				
		1	3, 7		02, 06				
		1	3, 7		12, 15, 16				
9	6104 024AA	1	2, 6		01, 02, 06				SCREW
		1	2, 6		11, 12, 14, 15, 16				
		1	2, 6		51, 52, 54, 55, 56				
10	5126 111AA	1	2, 6		01, 02, 06				CLIP, Hood
		1	2, 6		11, 12, 14, 15, 16				
		1	2, 6		51, 52, 54, 55, 56				
		1	3, 7		02, 06				
		1	3, 7		12, 15, 16				
11	5104 401AA	1	2, 6		01, 02, 06				STRIKER, Hood Latch
		1	2, 6		11, 12, 14, 15, 16				

Refer to Model Legend Information Bookmark

AR = Use as required - = Non illustrated part # = New this model year

March 3, 2006

Hood and Hood Release
Figure SVA-510

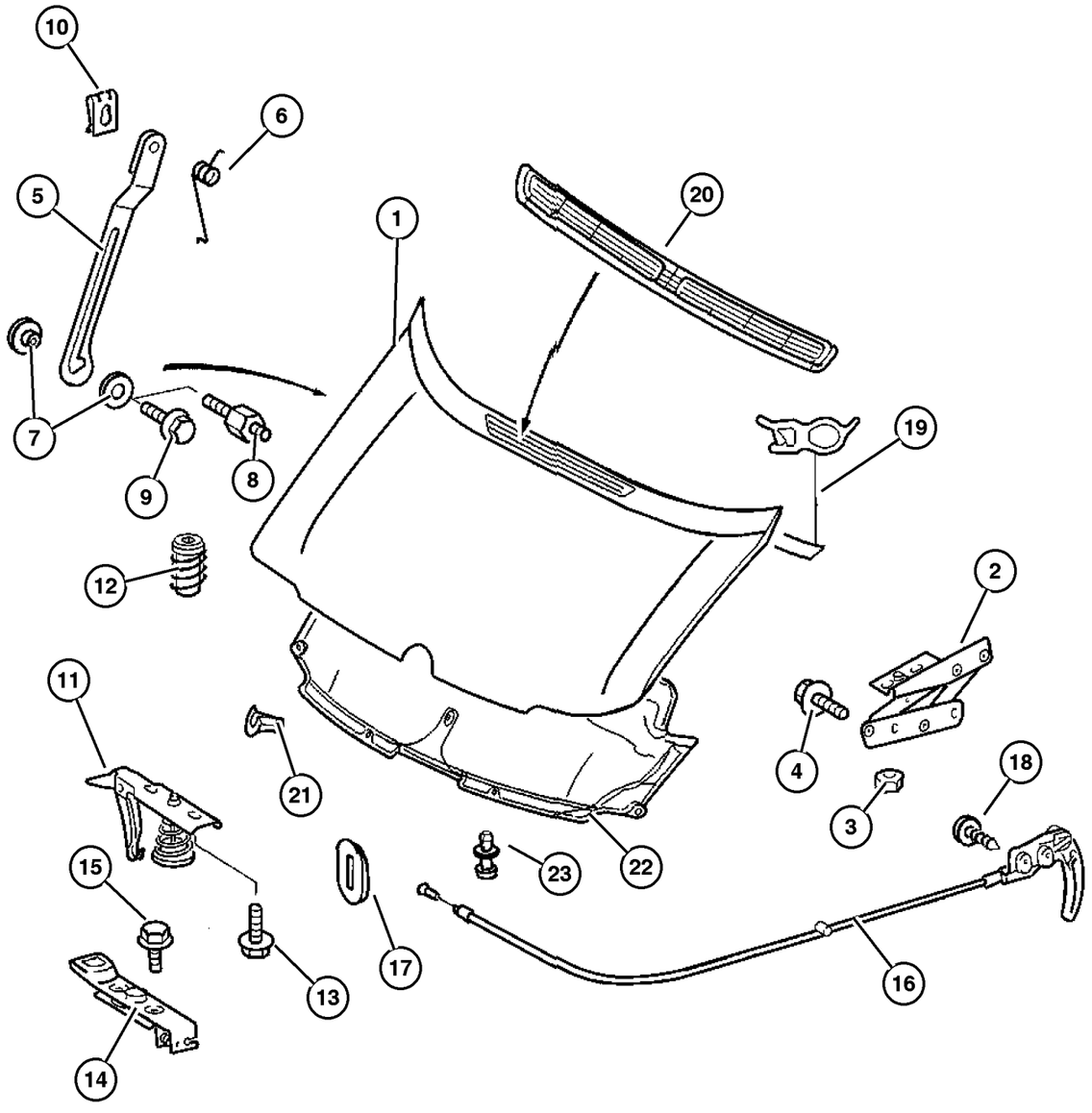

ITEM	PART NUMBER	QTY	LINE	SERIES	BODY	ENGINE	TRANS	TRIM	DESCRIPTION
		1	2, 6		51, 52, 54, 55, 56				
12	5134 041AA	2	2, 6		01, 02, 06				BUMPER, Rubber
		2	2, 6		11, 12, 14, 15, 16				
		2	2, 6		51, 52, 54, 55, 56				
		2	3, 7		02, 06				
		2	3, 7		12, 15, 16				
13	5073 824AA	2	2, 6		01, 02, 06				SCREW
		2	2, 6		11, 12, 14, 15, 16				
		2	2, 6		51, 52, 54, 55, 56				
		2	3, 7		02, 06				
		2	3, 7		12, 15, 16				
14	5104 028AA	1	2, 6		01, 02, 06				LATCH, Hood
		1	2, 6		11, 12, 14, 15, 16				
		1	2, 6		51, 52, 54, 55, 56				
		1	3, 7		02, 06				
		1	3, 7		12, 15, 16				
15	5133 476AB	2	2, 6		01, 02, 06				SCREW
		2	2, 6		11, 12, 14, 15, 16				

Refer to Model Legend Information Bookmark

AR = Use as required - = Non illustrated part # = New this model year

March 3, 2006

Hood and Hood Release
Figure SVA-510

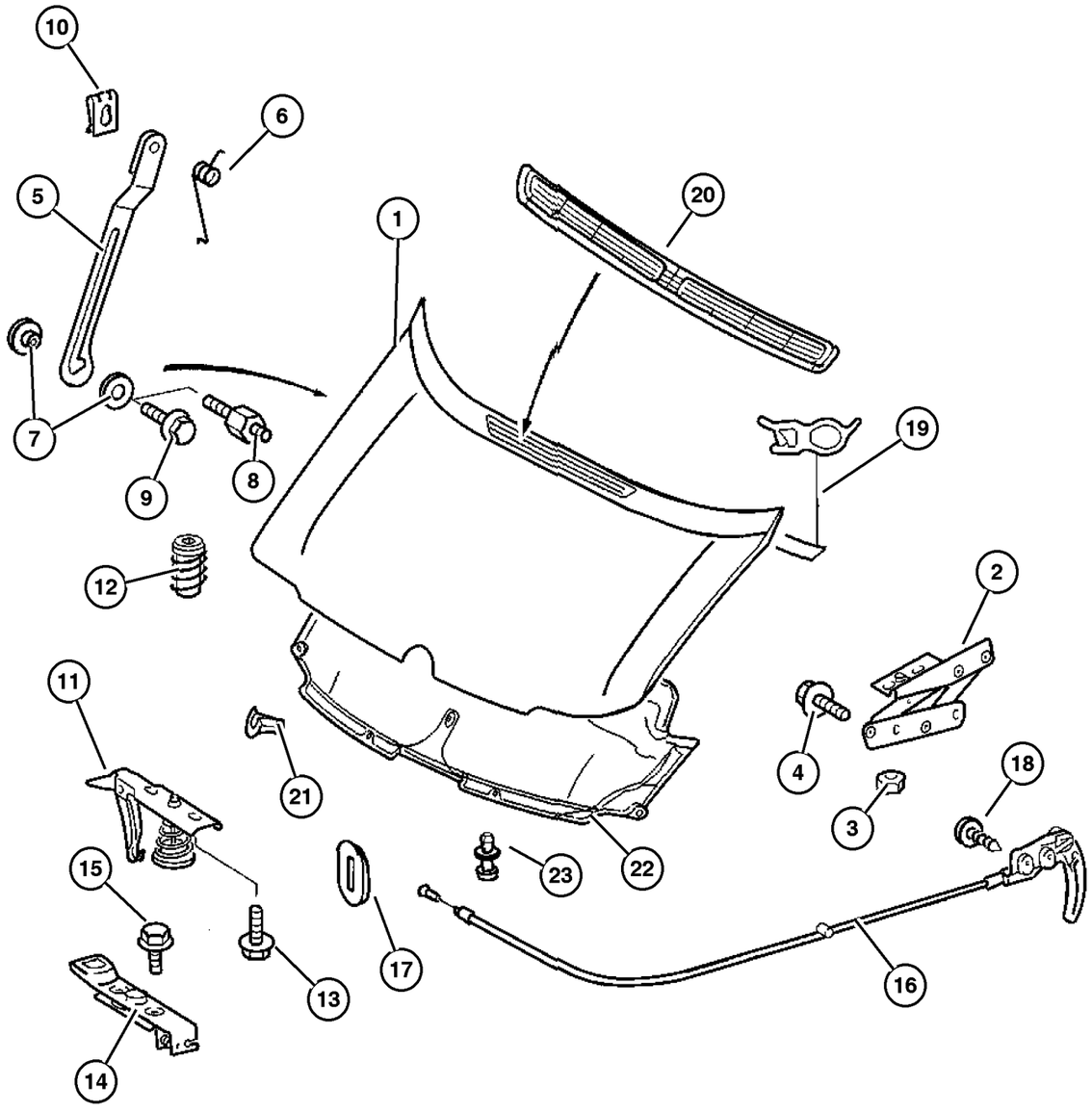

ITEM	PART NUMBER	QTY	LINE	SERIES	BODY	ENGINE	TRANS	TRIM	DESCRIPTION
		2	2, 6		51, 52, 54, 55, 56				
		2	3, 7		02, 06				
		2	3, 7		12, 15, 16				
16	5104 405AA	1	2, 6		01, 02, 06				CABLE, Hood Release
		1	2, 6		11, 12, 14, 15, 16				
		1	2, 6		51, 52, 54, 55, 56				
17	5133 935AA	1	2, 6		01, 02, 06				GROMMET, Door Wiring
		1	2, 6		11, 12, 14, 15, 16				
		1	2, 6		51, 52, 54, 55, 56				
		2	3, 7		12, 15, 16				
18	6104 507AA	1	3, 7		02, 06				SCREW
		2	2, 6		01, 02, 06				
		2	2, 6		11, 12, 14, 15, 16				
		2	2, 6		51, 52, 54, 55, 56				
19	5134 040AA	1	2, 6		01, 02, 06				SEAL, Hood
		1	2, 6		11, 12, 14, 15, 16				
		1	2, 6		51, 52, 54, 55, 56				

Refer to Model Legend Information Bookmark

AR = Use as required - = Non illustrated part # = New this model year

March 3, 2006

Hood and Hood Release
Figure SVA-510

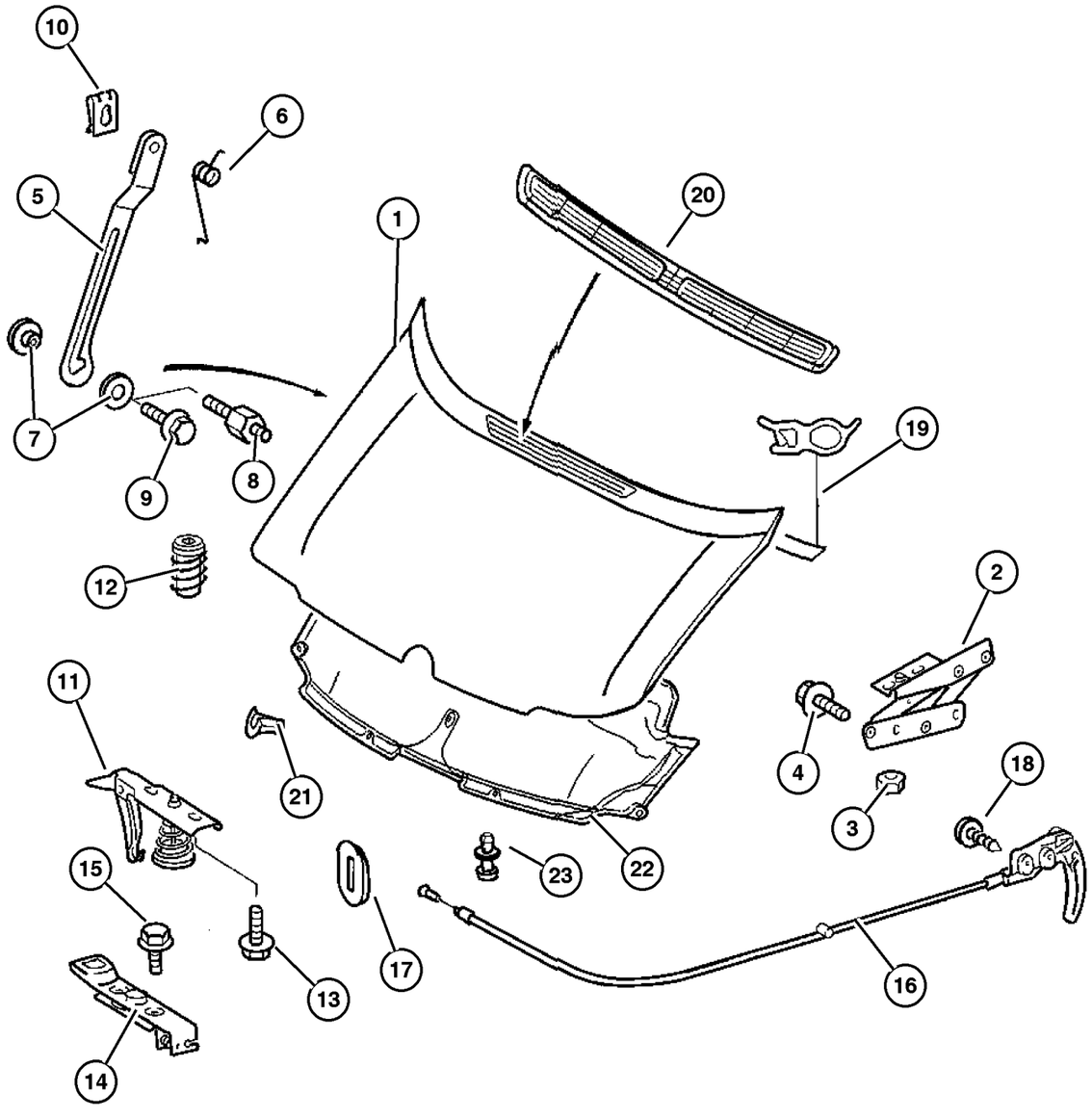

ITEM	PART NUMBER	QTY	LINE	SERIES	BODY	ENGINE	TRANS	TRIM	DESCRIPTION
		1	3, 7		02, 06				
		1	3, 7		12, 15, 16				
20									GRILLE, Hood
	5124 653AA	1	2, 6		01, 02, 06				
		1	2, 6		11, 12, 14, 15, 16				
		1	2, 6		51, 52, 54, 55, 56				
		1	3, 7		02, 06				
		1	3, 7		12, 15, 16				
21									GROMMET
	5103 932AA	1	2, 6		11, 12, 14, 15, 16				
		1	3, 7		12, 15, 16				
		1	2, 6		51, 52, 54, 55, 56				
22									INSULATION, Hood
	5104 486AA	1	2, 6		01, 02, 06				
		1	2, 6		11, 12, 14, 15, 16				
		1	2, 6		51, 52, 54, 55, 56				
		1	3, 7		02, 06				
		1	3, 7		12, 15, 16				
23									RIVET
	5103 921AA	12	2, 6		01, 02, 06				
		12	2, 6		11, 12, 14, 15, 16				
		12	2, 6		51, 52, 54, 55, 56				

Refer to Model Legend Information Bookmark

AR = Use as required - = Non illustrated part # = New this model year

March 3, 2006

Hood and Hood Release
Figure SVA-510

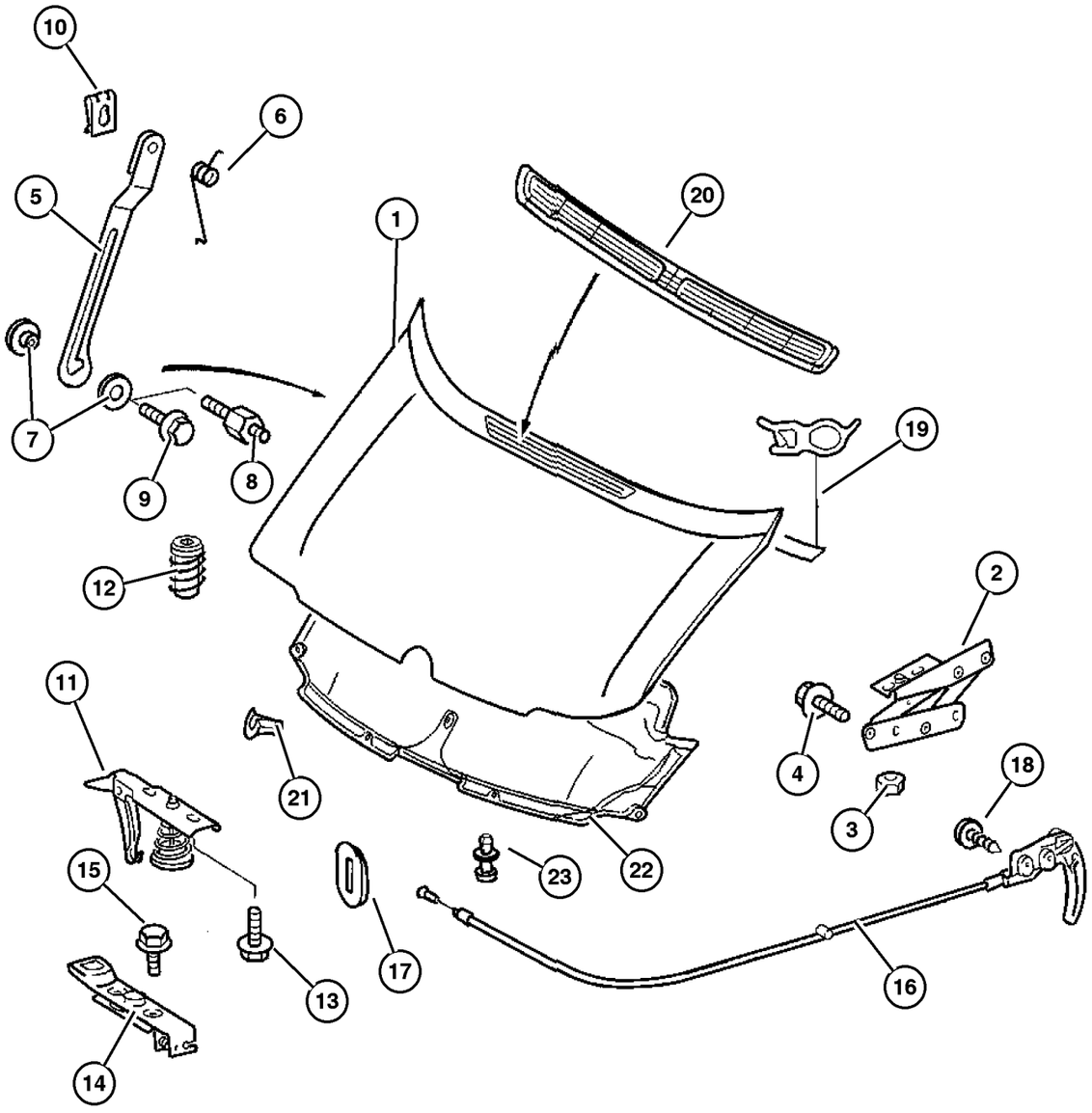

ITEM	PART NUMBER	QTY	LINE	SERIES	BODY	ENGINE	TRANS	TRIM	DESCRIPTION
		12	3, 7		02, 06				
		12	3, 7		12, 15, 16				

Refer to Model Legend Information Bookmark

Cowl and Dash
Figure SVA-610

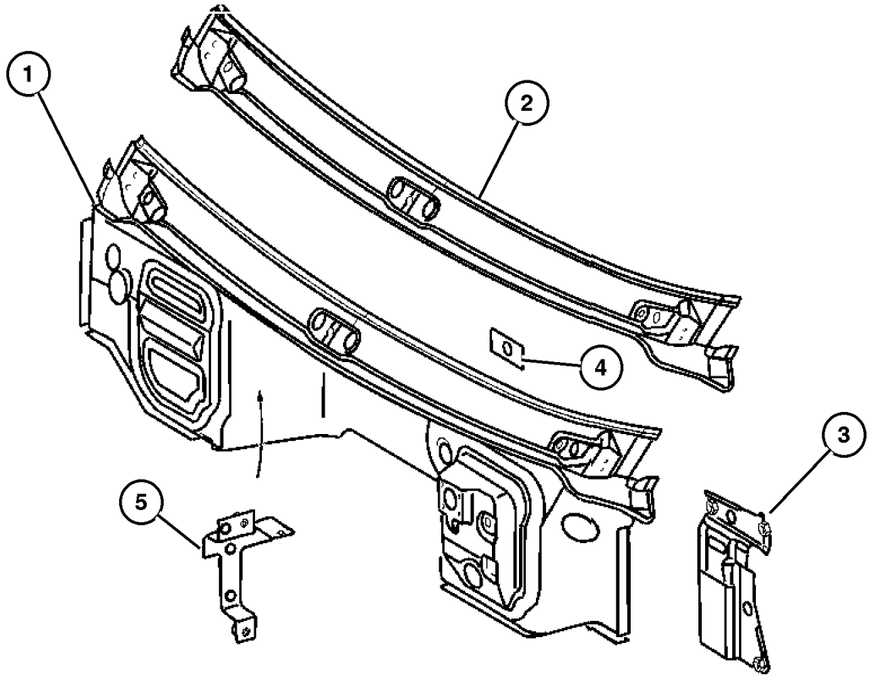

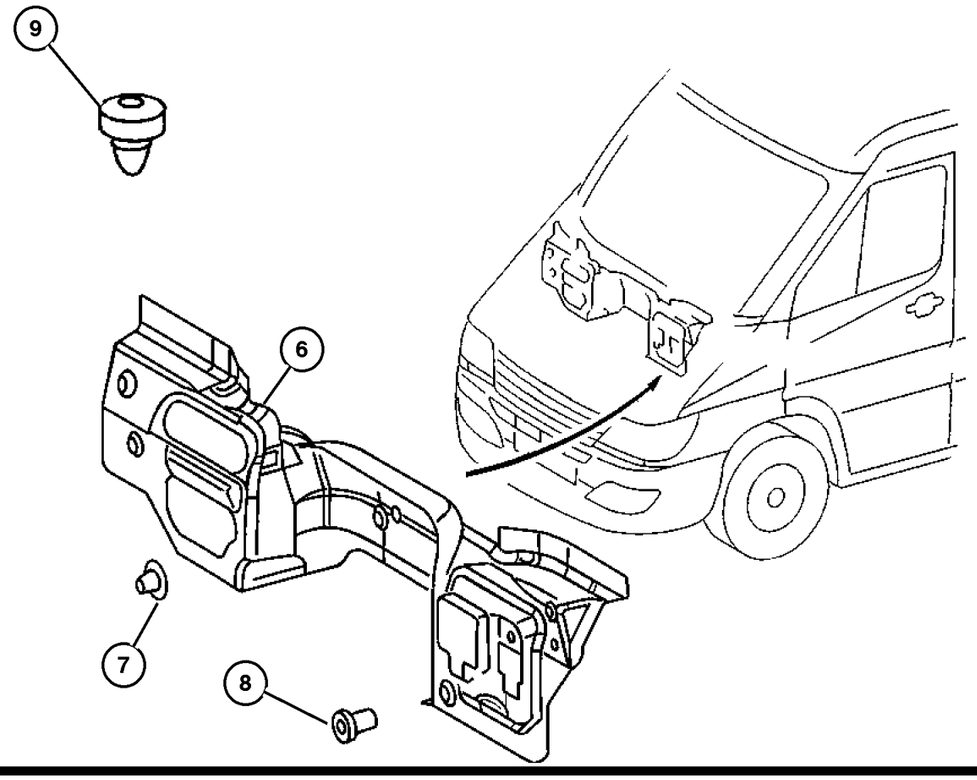

ITEM	PART NUMBER	QTY	LINE	SERIES	BODY	ENGINE	TRANS	TRIM	DESCRIPTION
1									PANEL, Dash Upper
	5121 578AA	1	2, 6		01, 02, 06				
		1	2, 6		11, 12, 14, 15, 16				
		1	2, 6		51, 52, 54, 55, 56				
		1	3, 7		02, 06				
		1	3, 7		12, 15, 16				
2									PANEL, Cowl Top
	5104 164AA	1	2, 6		01, 02, 06				
		1	2, 6		11, 12, 14, 15, 16				
		1	2, 6		51, 52, 54, 55, 56				
		1	3, 7		02, 06				
		1	3, 7		12, 15, 16				
3									BRACKET, Dash
	5121 583AA	1	2, 6		01, 02, 06				
		1	2, 6		11, 12, 14, 15, 16				
		1	2, 6		51, 52, 54, 55, 56				
		1	3, 7		02, 06				
		1	3, 7		12, 15, 16				
4									PLATE
	5121 447AA	1	2, 6		01, 02, 06				
		1	2, 6		11, 12, 14, 15, 16				
		1	2, 6		51, 52, 54, 55, 56				

Refer to Model Legend Information Bookmark

Cowl and Dash
Figure SVA-610

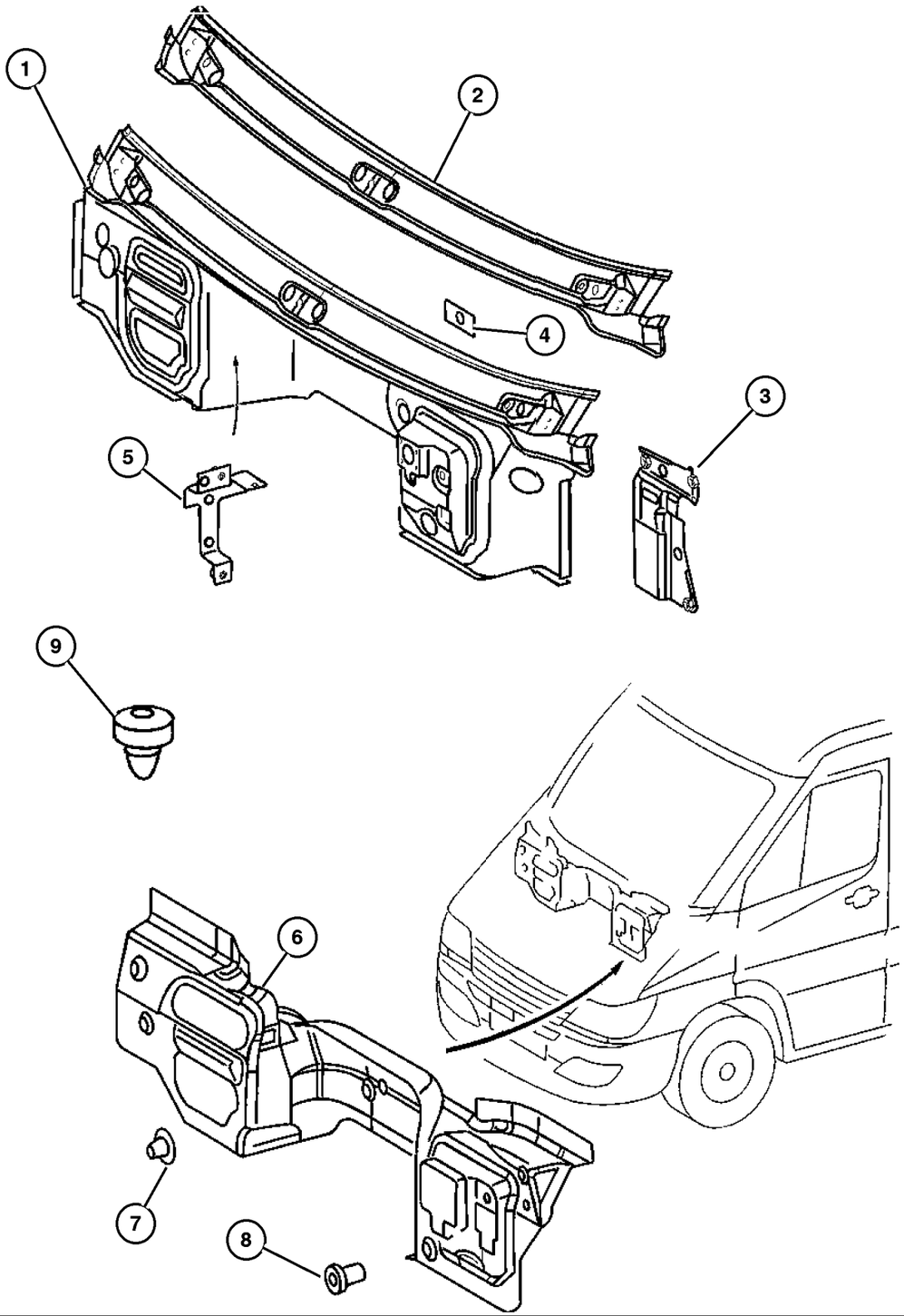

ITEM	PART NUMBER	QTY	LINE	SERIES	BODY	ENGINE	TRANS	TRIM	DESCRIPTION
		1	3, 7		02, 06				
		1	3, 7		12, 15, 16				
5									BRACKET
	5124 627AA	1	2, 6		01, 02, 06				
		1	2, 6		11, 12, 14, 15, 16				
		1	2, 6		51, 52, 54, 55, 56				
		1	3, 7		02, 06				
		1	3, 7		12, 15, 16				
6									SILENCER, Dash Panel-Engine Compartment
	5122 526AA	1	2, 6		01, 02, 06				
		1	2, 6		11, 12, 14, 15, 16				
		1	2, 6		51, 52, 54, 55, 56				
		1	3, 7		02, 06				
		1	3, 7		12, 15, 16				
7									PLUG, Button
	5097 041AA	4	2, 6		01, 02, 06				
		4	2, 6		11, 12, 14, 15, 16				
		4	2, 6		51, 52, 54, 55, 56				
		4	3, 7		02, 06				
		4	3, 7		12, 15, 16				
8									PLUG, Button
	5125 592AA	2	2, 6		01, 02, 06				

Refer to Model Legend Information Bookmark

AR = Use as required - = Non illustrated part # = New this model year

March 3, 2006

« RETURN TO GROUP INDEX

Cowl and Dash
Figure SVA-610

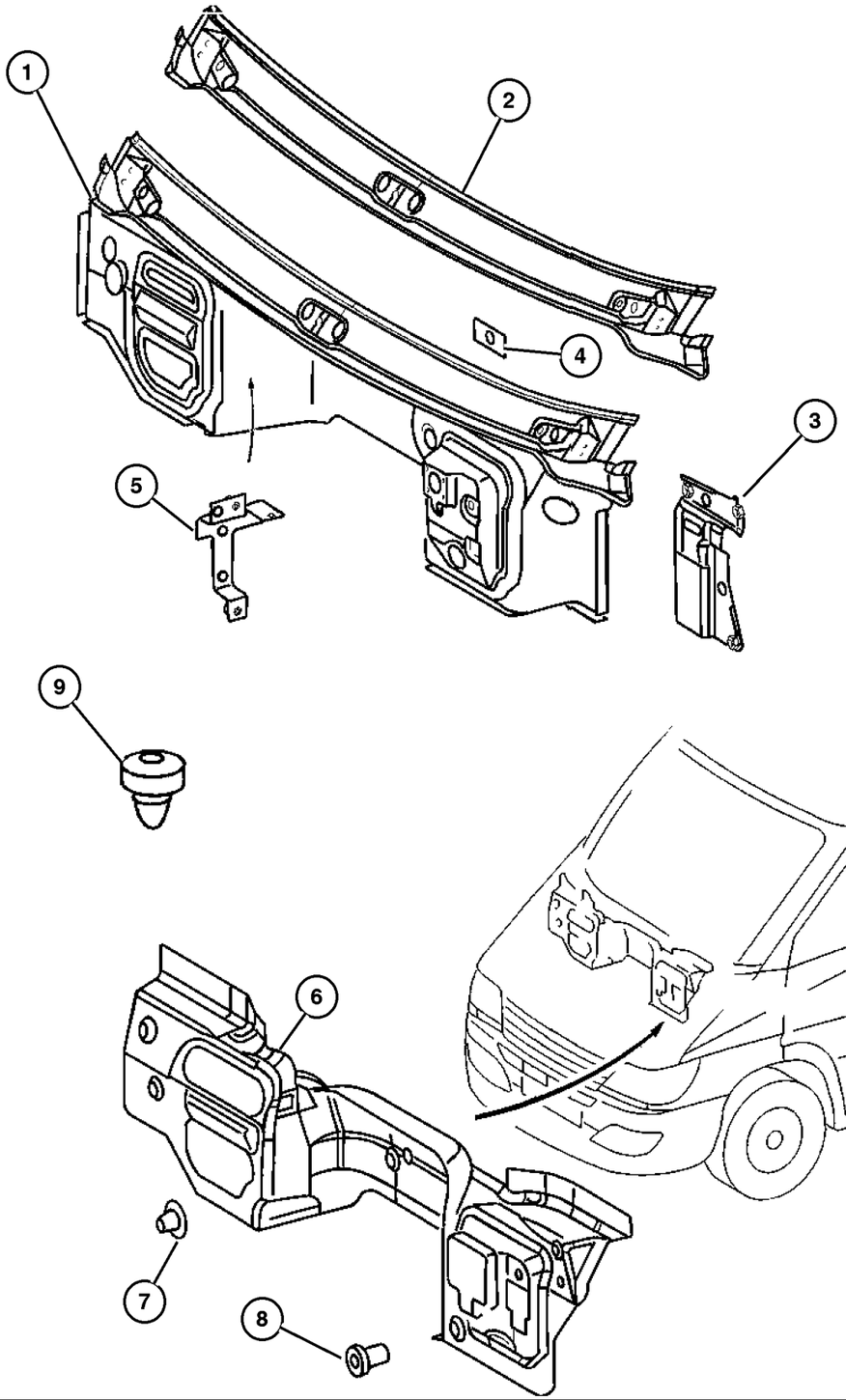

ITEM	PART NUMBER	QTY	LINE	SERIES	BODY	ENGINE	TRANS	TRIM	DESCRIPTION
		2	2, 6		11, 12,				
					14, 15,				
					16				
		2	2, 6		51, 52,				
					54, 55,				
					56				
		2	3, 7		02, 06				
		2	3, 7		12, 15,				
					16				
9									BUMPER, Rubber
	5103 724AA	2	2, 6		01, 02,				
					06				
		2	2, 6		11, 12,				
					14, 15,				
					16				
		2	2, 6		51, 52,				
					54, 55,				
					56				
		2	3, 7		02, 06				
		2	3, 7		12, 15,				
					16				

Refer to Model Legend Information Bookmark

AR = Use as required - = Non illustrated part # = New this model year

March 3, 2006

« RETURN TO GROUP INDEX

Inner Paneling in Cab, Cowl
Figure SVA-620

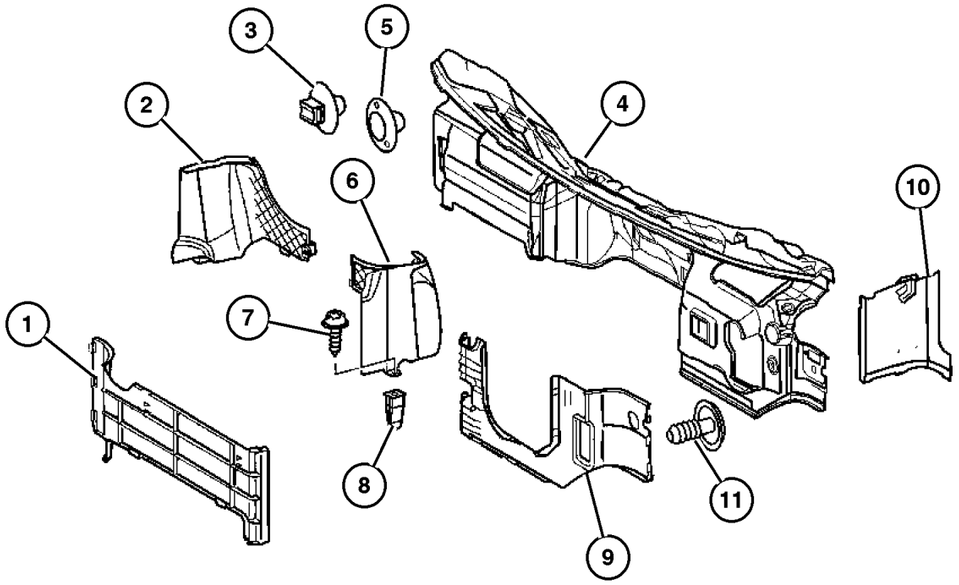

ITEM	PART NUMBER	QTY	LINE	SERIES	BODY	ENGINE	TRANS	TRIM	DESCRIPTION
1									SILENCER, Dash And Cowl Sides
	5131 688AA	1	2, 6		11, 12, 14, 15, 16				
		1	2, 6		51, 52, 54, 55, 56				
		1	3, 7		12, 15, 16				
2									PANEL, Bulkhead Support
	5122 864AA	1	2, 6		01, 02, 06				
		1	2, 6		11, 12, 14, 15, 16				
		1	2, 6		51, 52, 54, 55, 56				
		1	3, 7		02, 06				
		1	3, 7		12, 15, 16				
3									PLUG, Button
	5125 592AA	1	2, 6		01, 02, 06				
		1	2, 6		11, 12, 14, 15, 16				
		1	2, 6		51, 52, 54, 55, 56				
		1	3, 7		02, 06				
		1	3, 7		12, 15, 16				
4									PANEL, Cowl
	5122 857AA	1	2, 6		01, 02, 06				
		1	2, 6		11, 12, 14, 15, 16				
		1	2, 6		51, 52, 54, 55, 56				
		1	3, 7		02, 06				
		1	3, 7		12, 15, 16				
5									PLUG, Button

Refer to Model Legend Information Bookmark

Inner Paneling in Cab, Cowl
Figure SVA-620

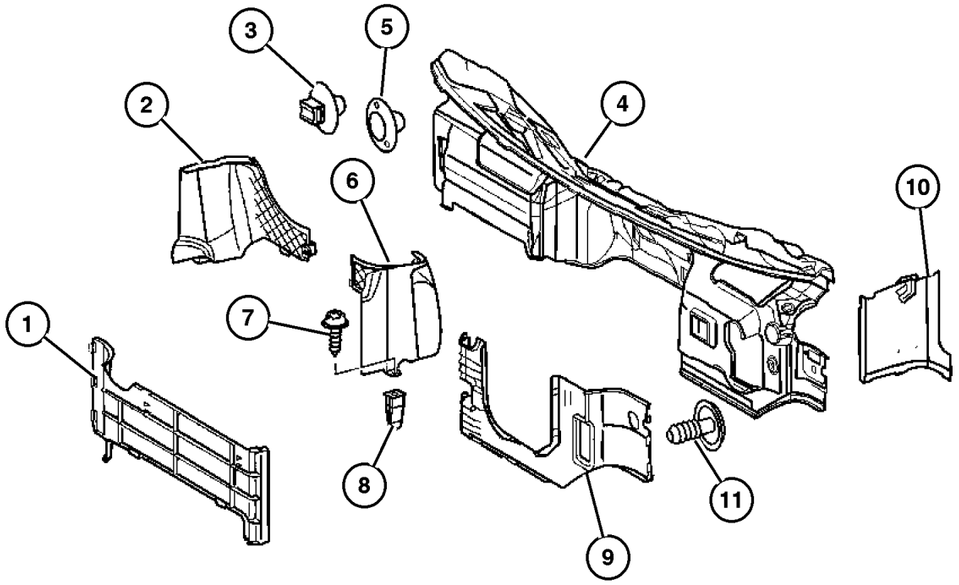

ITEM	PART NUMBER	QTY	LINE	SERIES	BODY	ENGINE	TRANS	TRIM	DESCRIPTION
	5097 041AA	3	2, 6		01, 02, 06				
		3	2, 6		11, 12, 14, 15, 16				
		3	2, 6		51, 52, 54, 55, 56				
		3	3, 7		02, 06				
		3	3, 7		12, 15, 16				
6									PANEL, Bulkhead Support
	5122 862AA	1	2, 6		01, 02, 06				
		1	2, 6		11, 12, 14, 15, 16				
		1	2, 6		51, 52, 54, 55, 56				
		1	3, 7		02, 06				
		1	3, 7		12, 15, 16				
7									SCREW, Tapping
	6104 574AA	2	2, 6		11, 12, 14, 15, 16				
		2	2, 6		51, 52, 54, 55, 56				
		2	2, 6		01, 02, 06				
		2	3, 7		12, 15, 16				
		2	3, 7		02, 06				
8									NUT, Plastic Snap-in
	5098 837AB	8	2, 6		01, 02, 06				
		8	2, 6		11, 12, 14, 15, 16				
		8	2, 6		51, 52, 54, 55, 56				
		8	3, 7		02, 06				

Refer to Model Legend Information Bookmark

Inner Paneling in Cab, Cowl
Figure SVA-620

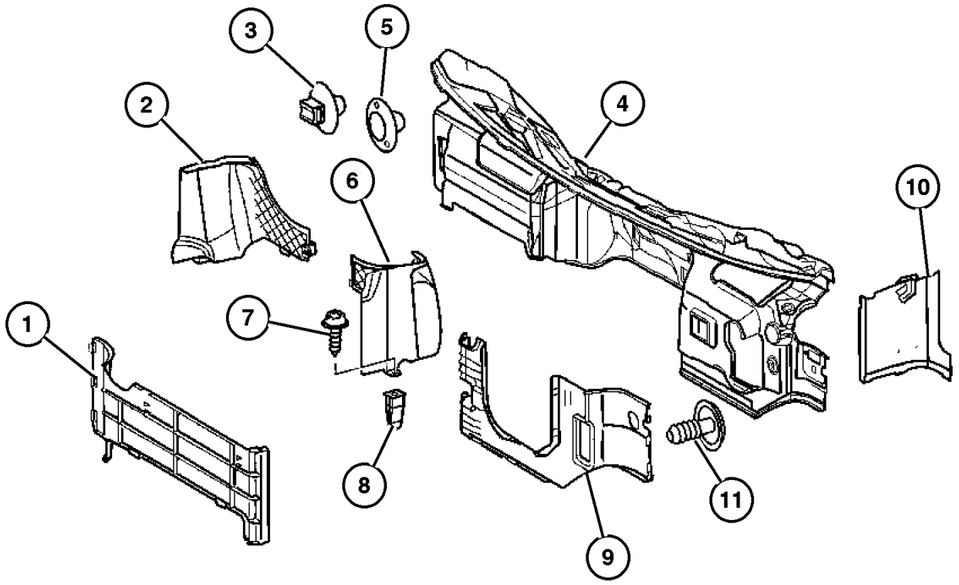

ITEM	PART NUMBER	QTY	LINE	SERIES	BODY	ENGINE	TRANS	TRIM	DESCRIPTION
		8	3, 7		12, 15, 16				
9	5131 685AA	1	2, 6		11, 12, 14, 15, 16				PANEL, Dash
		1	2, 6		51, 52, 54, 55, 56				
		1	3, 7		12, 15, 16				
10	5104 266AA	1	2, 6		01, 02, 06				PANEL, Cowl Side Right
		1	2, 6		11, 12, 14, 15, 16				Right
		1	2, 6		51, 52, 54, 55, 56				Right
		1	3, 7		02, 06				Right
		1	3, 7		12, 15, 16				Right
	5122 865AA	1	2, 6		01, 02, 06				Left
		1	2, 6		11, 12, 14, 15, 16				Left
		1	2, 6		51, 52, 54, 55, 56				Left
		1	3, 7		02, 06				Left
		1	3, 7		12, 15, 16				Left
11	1AS62 DX9AA	2	2, 6		01, 02, 06				PLUG, Body
		2	2, 6		11, 12, 14, 15, 16				
		2	2, 6		51, 52, 54, 55, 56				
		2	3, 7		02, 06				

Refer to Model Legend Information Bookmark

AR = Use as required - = Non illustrated part # = New this model year

March 3, 2006

« RETURN TO GROUP INDEX

Inner Paneling in Cab, Cowl
Figure SVA-620

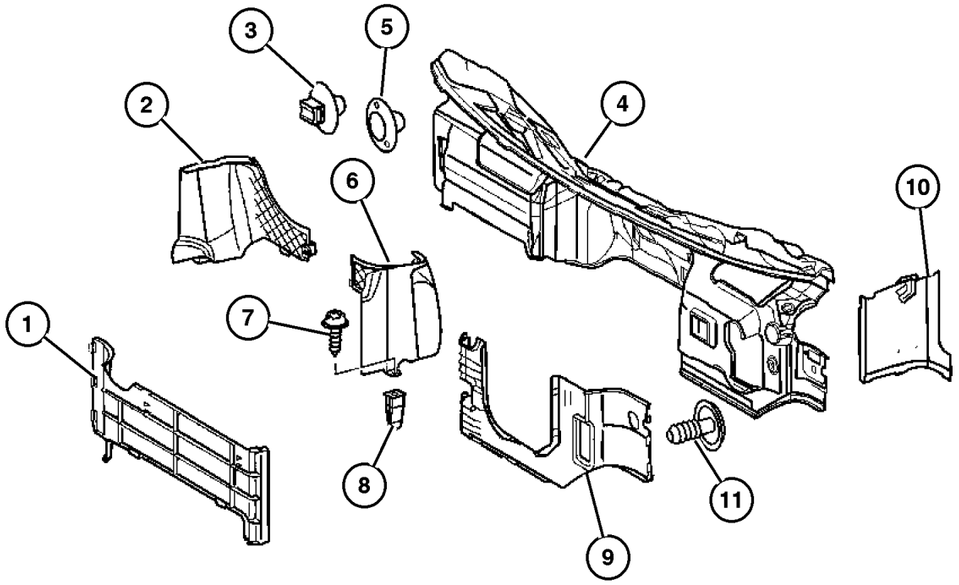

ITEM	PART NUMBER	QTY	LINE	SERIES	BODY	ENGINE	TRANS	TRIM	DESCRIPTION
		2	3, 7		12, 15, 16				

Refer to Model Legend Information Bookmark

AR = Use as required - = Non illustrated part # = New this model year

March 3, 2006

« RETURN TO GROUP INDEX

Windshield, Backlite and Rear View Mirror
Figure SVA-710

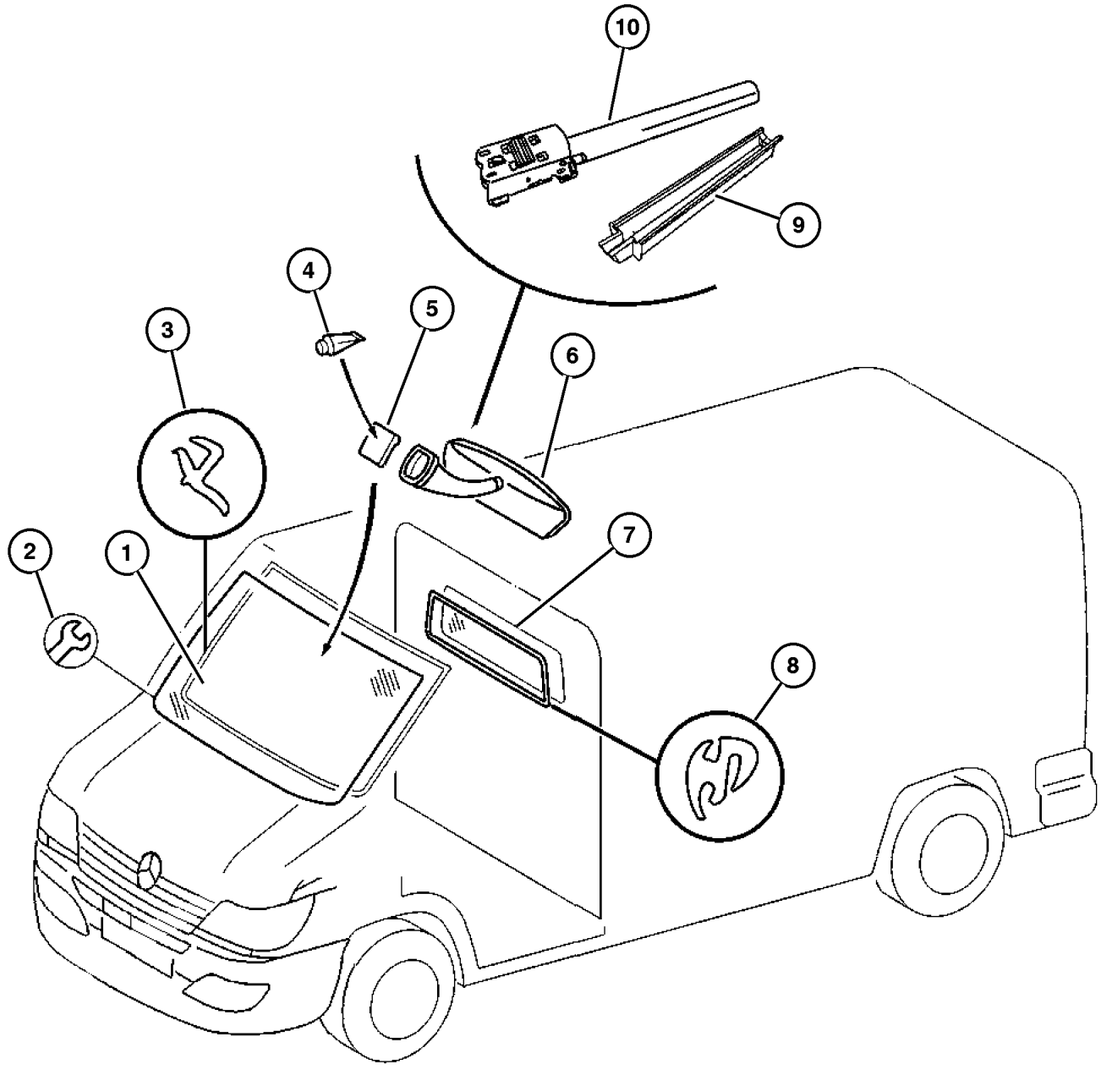

ITEM	PART NUMBER	QTY	LINE	SERIES	BODY	ENGINE	TRANS	TRIM	DESCRIPTION
1									WINDSHIELD
	5103 585AA	1	2, 6		11, 12, 14, 15, 16				Solar, Without Shade Band
		1	2, 6		51, 52, 54, 55, 56				Solar, Without Shade Band
		1	3, 7		12, 15, 16				Solar, Without Shade Band
	5103 586AA	1	2, 6		11, 12, 14, 15, 16				Solar, With Shade Band
		1	2, 6		51, 52, 54, 55, 56				Solar, With Shade Band
	5122 272AA	1	2, 6		11, 12, 14, 15, 16				Heated, With Rain Sensor
		1	2, 6		51, 52, 54, 55, 56				Heated, With Rain Sensor
		1	3, 7		12, 15, 16				Heated, With Rain Sensor
	5122 274AA	1	2, 6		01, 02, 06				Heated, With Rain Sensor
		1	3, 7		02, 06				Heated, With Rain Sensor
	5122 335AA	1	2, 6		01, 02, 06				Solar, With Shade Band
		1	3, 7		02, 06				Solar, With Shade Band
	5136 429AA	1	2, 6		01, 02, 06				Solar, Without Shade Band
		1	3, 7		02, 06				Solar, Without Shade Band
2									REPAIR KIT, Windshield
	5104 594AA	1	2, 6		11, 12, 14, 15, 16				
		1	2, 6		51, 52, 54, 55, 56				
		1	2, 6		01, 02, 06				
		1	3, 7		12, 15, 16				
		1	3, 7		02, 06				
3									WEATHERSTRIP

Refer to Model Legend Information Bookmark

AR = Use as required - = Non illustrated part # = New this model year

March 3, 2006

« RETURN TO GROUP INDEX

»

Windshield, Backlite and Rear View Mirror
Figure SVA-710

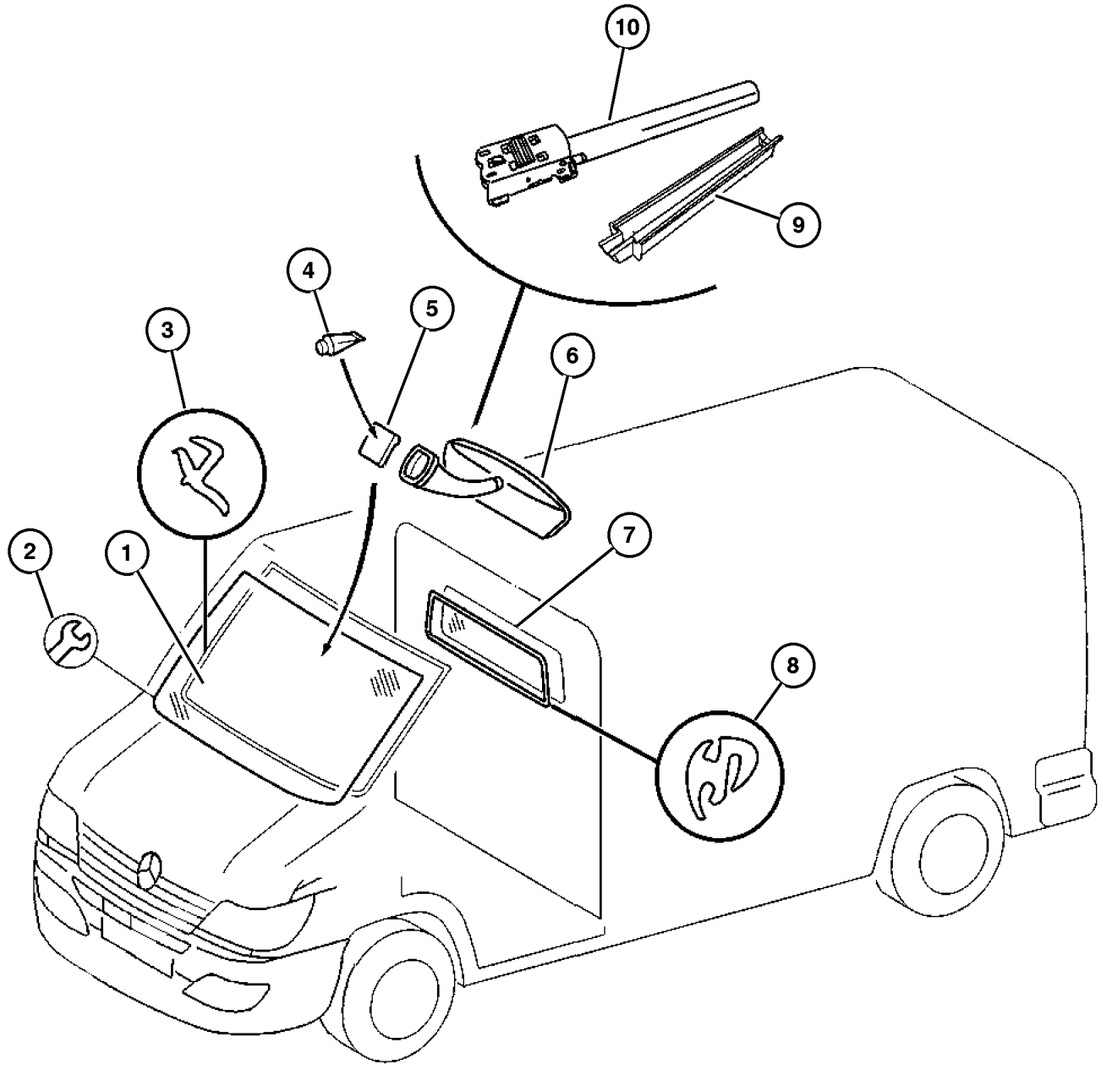

ITEM	PART NUMBER	QTY	LINE	SERIES	BODY	ENGINE	TRANS	TRIM	DESCRIPTION
	5103 584AA	1	2, 6		01, 02, 06				
		1	2, 6		11, 12, 14, 15, 16				
		1	2, 6		51, 52, 54, 55, 56				
		1	3, 7		02, 06				
		1	3, 7		12, 15, 16				
4	5073 862AA	2	2, 3, 6, 7						ADHESIVE
5									BUTTON, Rear View Mirror
	5104 241AA	1	2, 6		01, 02, 06				
		1	2, 6		11, 12, 14, 15, 16				
		1	2, 6		51, 52, 54, 55, 56				
		1	3, 7		02, 06				
		1	3, 7		12, 15, 16				
6									MIRROR, Inside Rear View
	5104 435AA	1	2, 6		01, 02, 06				
		1	2, 6		11, 12, 14, 15, 16				
		1	2, 6		51, 52, 54, 55, 56				
		1	3, 7		02, 06				
		1	3, 7		12, 15, 16				
	5127 266AA	1	2, 6		01, 02, 06				With Rain Sensor [GBF]
		1	2, 6		11, 12, 14, 15, 16				With Rain Sensor [GBF]
		1	2, 6		51, 52, 54, 55, 56				With Rain Sensor [GBF]
		1	3, 7		02, 06				With Rain Sensor [GBF]

Refer to Model Legend Information Bookmark

Windshield, Backlite and Rear View Mirror
Figure SVA-710

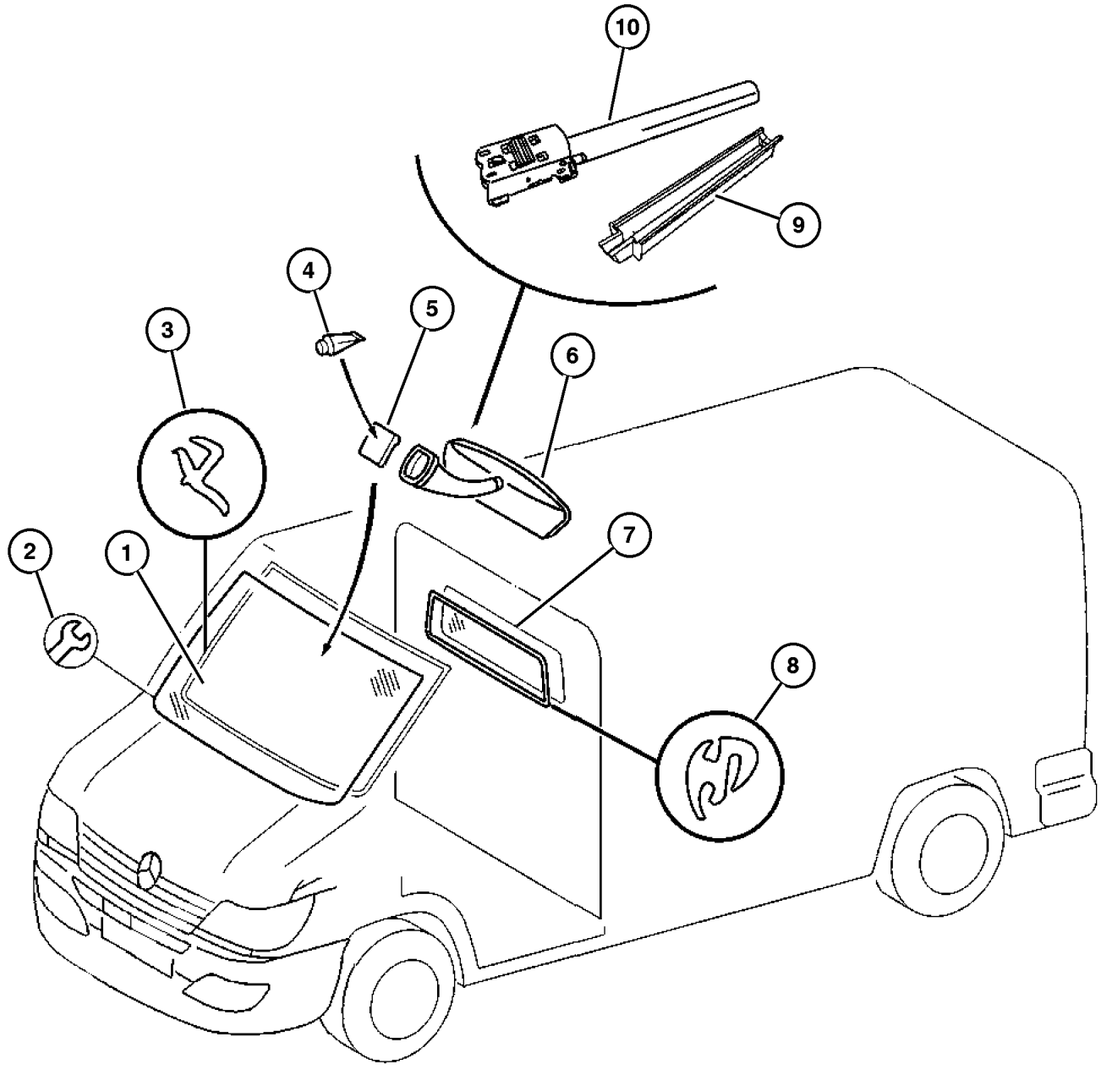

ITEM	PART NUMBER	QTY	LINE	SERIES	BODY	ENGINE	TRANS	TRIM	DESCRIPTION
		1	3, 7		12, 15, 16				With Rain Sensor [GBF]
7									GLASS, Backlite, Fixed
	5104 249AA	1	2, 6		01, 02, 06				
		1	2, 6		11, 12, 14, 15, 16				
		1	3, 7		02, 06				
		1	3, 7		12, 15, 16				
8									WEATHERSTRIP, Fixed
	5104 250AA	1	2, 6		01, 02, 06				
		1	2, 6		11, 12, 14, 15, 16				
		1	3, 7		02, 06				
		1	3, 7		12, 15, 16				
9									COVER, Rear View Mirror Wire, Outer
	5127 268AA	1	2, 6		01, 02, 06				
		1	2, 6		11, 12, 14, 15, 16				
		1	2, 6		51, 52, 54, 55, 56				
		1	3, 7		02, 06				
		1	3, 7		12, 15, 16				
10									COVER, Rear View Mirror Wire, Inner
	5127 267AA	1	2, 6		01, 02, 06				
		1	2, 6		11, 12, 14, 15, 16				
		1	2, 6		51, 52, 54, 55, 56				
		1	3, 7		02, 06				

Refer to Model Legend Information Bookmark

Windshield, Backlite and Rear View Mirror
Figure SVA-710

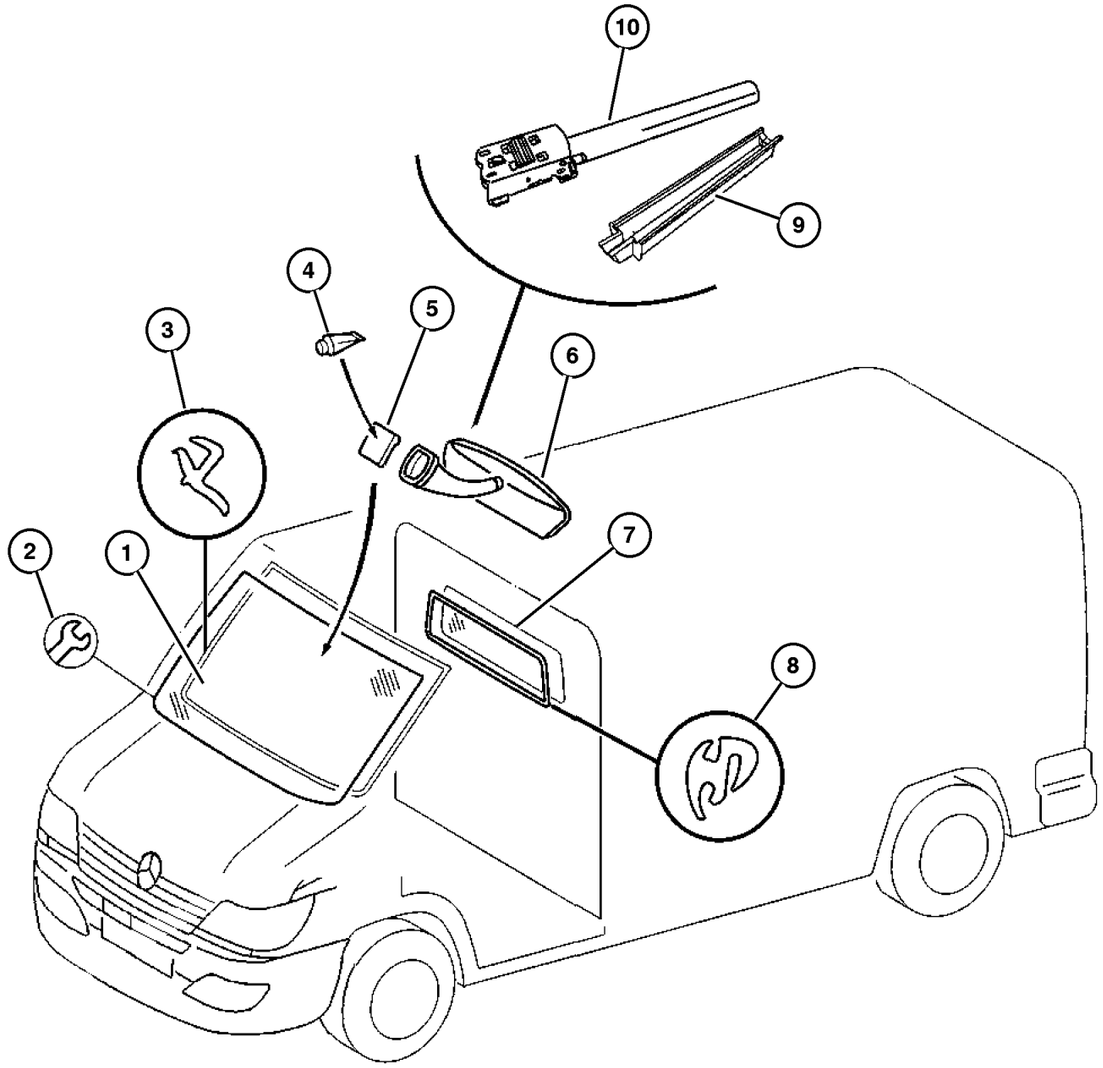

ITEM	PART NUMBER	QTY	LINE	SERIES	BODY	ENGINE	TRANS	TRIM	DESCRIPTION
		1	3, 7		12, 15, 16				

Refer to Model Legend Information Bookmark

AR = Use as required - = Non illustrated part # = New this model year

March 3, 2006

« RETURN TO GROUP INDEX

Front Right Side Sliding Glass
Figure SVA-720

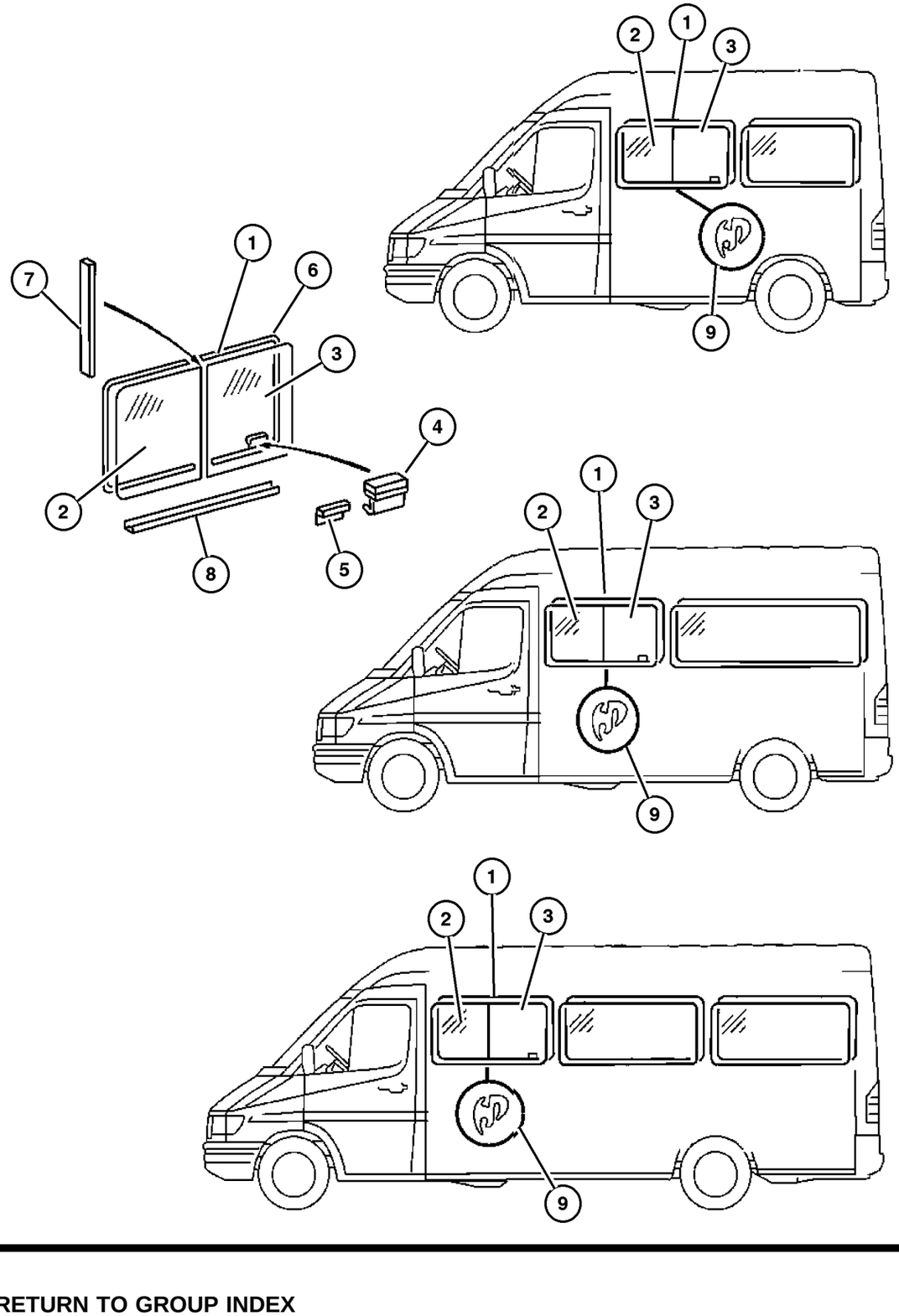

ITEM	PART NUMBER	QTY	LINE	SERIES	BODY	ENGINE	TRANS	TRIM	DESCRIPTION
1									GLASS, Bodyside Window
	5122 302AA	1	2, 6		11, 12, 14, 15, 16				Privacy
		1	2, 6		51, 52, 54, 55, 56				Privacy
		1	3, 7		12, 15, 16				Privacy
2									GLASS, Bodyside Window, Fixed
	5134 043AA	1	2, 6		11, 12, 14, 15, 16				Privacy
		1	2, 6		51, 52, 54, 55, 56				Privacy
		1	3, 7		12, 15, 16				Privacy
3									GLASS, Sliding Door, Vented
	5134 003AA	1	2, 6		11, 12, 14, 15, 16				Privacy
		1	2, 6		51, 52, 54, 55, 56				Privacy
		1	3, 7		12, 15, 16				Privacy
4									HANDLE, Vent Window
	5134 004AA	1	2, 6		11, 12, 14, 15, 16				
		1	2, 6		51, 52, 54, 55, 56				
		1	3, 7		12, 15, 16				
5									RETAINER, Side Panel Vent Window
	5133 535AA	1	2, 6		11, 12, 14, 15, 16				
		1	2, 6		51, 52, 54, 55, 56				
		1	3, 7		12, 15, 16				
6									WEATHERSTRIP, Side Panel Vent

Refer to Model Legend Information Bookmark

AR = Use as required - = Non illustrated part # = New this model year

March 3, 2006

« RETURN TO GROUP INDEX

»

Front Right Side Sliding Glass
Figure SVA-720

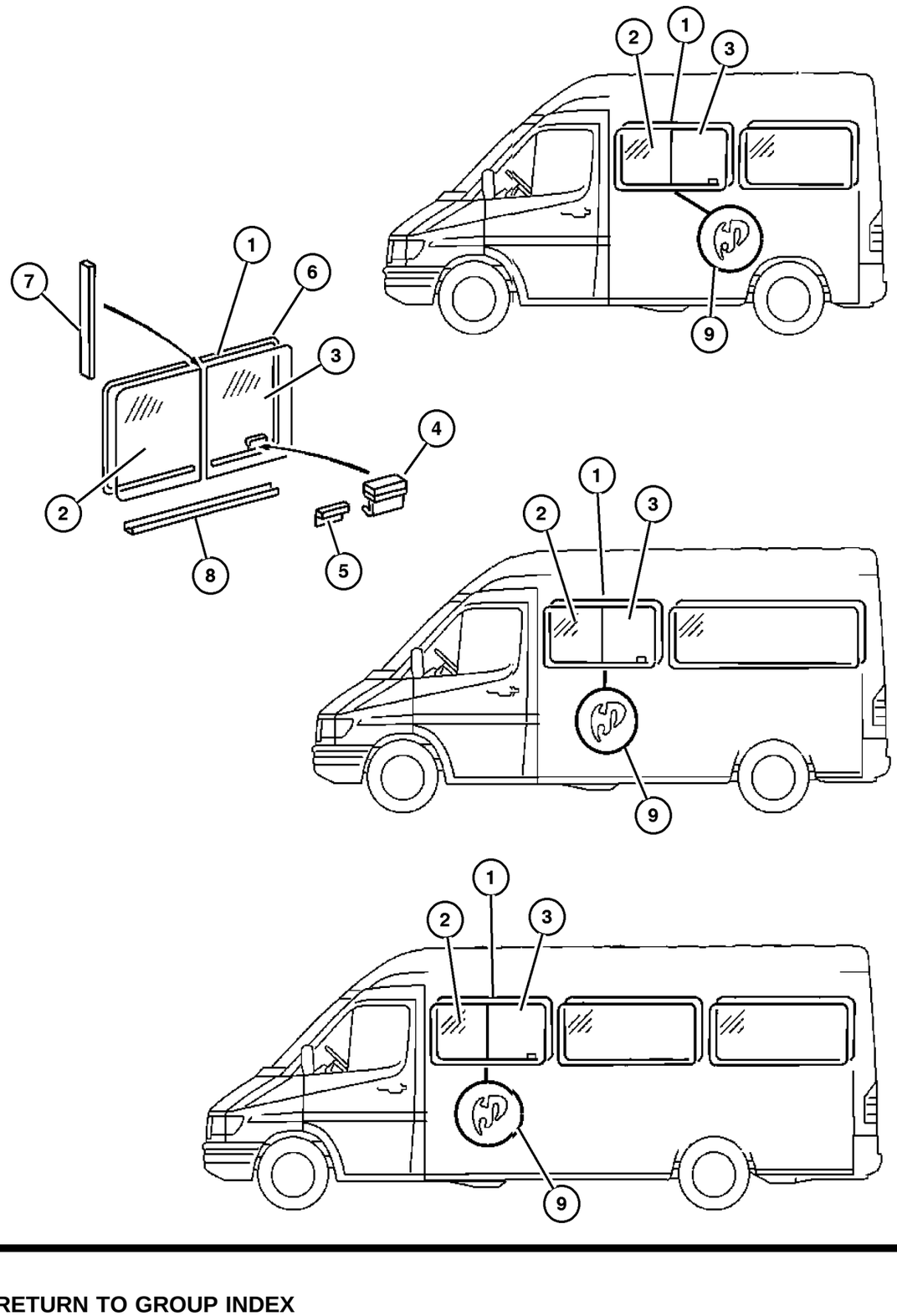

ITEM	PART NUMBER	QTY	LINE	SERIES	BODY	ENGINE	TRANS	TRIM	DESCRIPTION
	5134 055AA	2	2, 6		11, 12, 14, 15, 16				
		2	2, 6		51, 52, 54, 55, 56				
		2	3, 7		12, 15, 16				
7									WEATHERSTRIP, Side Panel Vent
	5133 536AA	1	2, 6		11, 12, 14, 15, 16				
		1	2, 6		51, 52, 54, 55, 56				
		1	3, 7		12, 15, 16				
8									WEATHERSTRIP, Glass
	5134 059AA	2	2, 6		11, 12, 14, 15, 16				
		2	2, 6		51, 52, 54, 55, 56				
		2	3, 7		12, 15, 16				
9									SEAL, Window Opening
	5104 246AA	1	2, 6		11, 12, 14, 15, 16				
		1	2, 6		51, 52, 54, 55, 56				
		1	3, 7		12, 15, 16				

Refer to Model Legend Information Bookmark

Side Glass, Fixed
Figure SVA-730

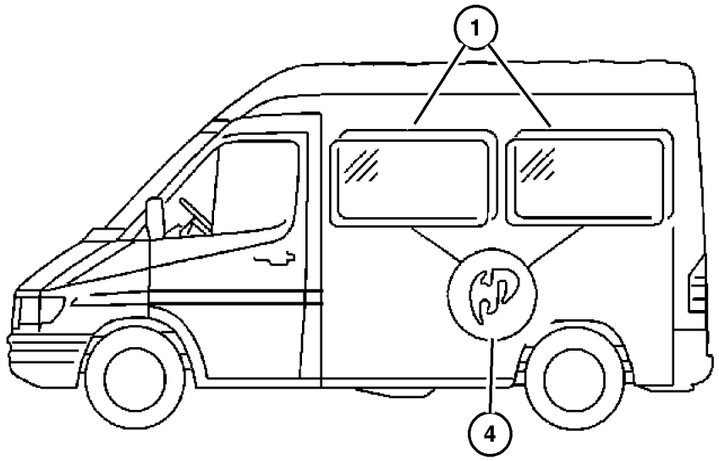

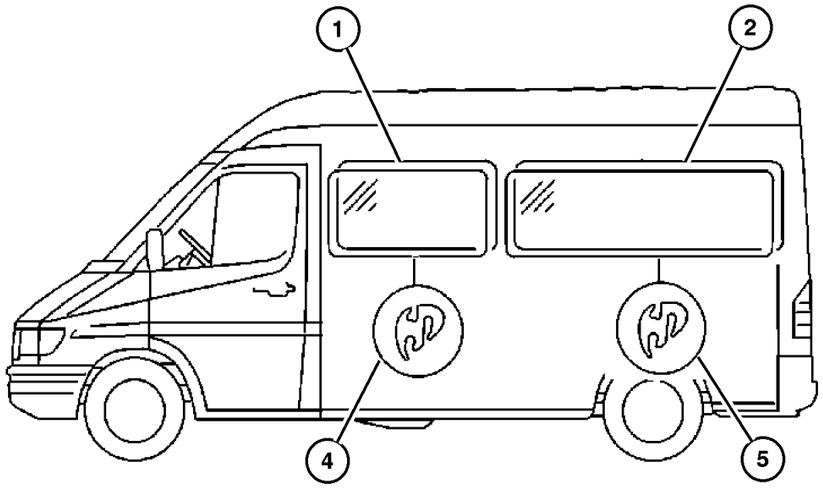

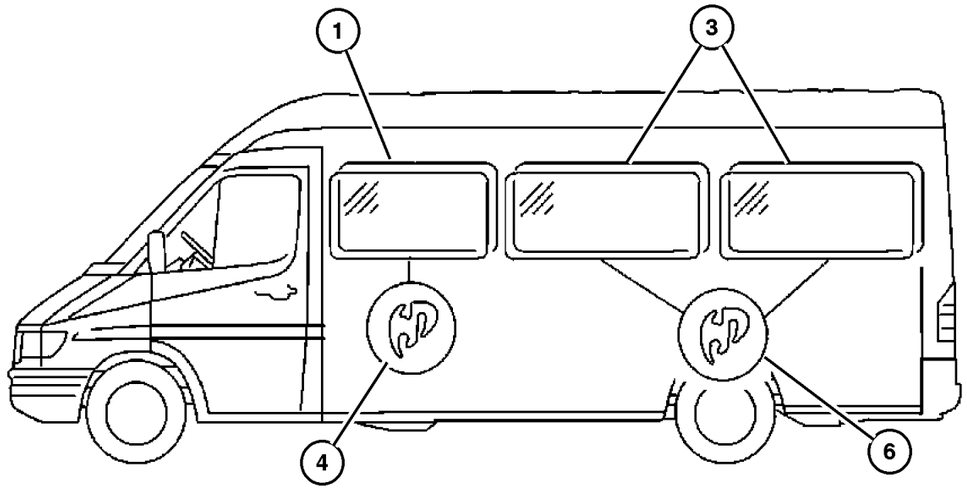

ITEM	PART NUMBER	QTY	LINE	SERIES	BODY	ENGINE	TRANS	TRIM	DESCRIPTION
1									GLASS, Bodyside Window
	5104 245AA	1	2, 6		11, 12, 14, 15, 16				Privacy
		1	2, 6		51, 52, 54, 55, 56				Privacy
		1	3, 7		12, 15, 16				Privacy
2									GLASS, Bodyside Window
	5122 350AA	1	2, 6		12, 15				Tint
		1	2, 6		52, 55				Tint
		1	3, 7		12, 15				Tint
	5134 334AA	1	2, 6		12, 15				Privacy
		1	2, 6		52, 55				Privacy
		1	3, 7		12, 15				Privacy
3									GLASS, Bodyside Window
	5104 247AA	1	2, 6		11, 12, 14, 15, 16				Tint
		1	2, 6		51, 52, 54, 55, 56				Tint
		1	3, 7		12, 15, 16				Tint
	5134 335AA	1	2, 6		11, 12, 14, 15, 16				Privacy
		1	2, 6		51, 52, 54, 55, 56				Privacy
		1	3, 7		12, 15, 16				Privacy
4									SEAL, Window Opening
	5104 246AA	1	2, 6		11, 12, 14, 15, 16				
		1	2, 6		51, 52, 54, 55, 56				
		1	3, 7		12, 15, 16				
5									SEAL, Window Opening
	5104 248AA	1	2, 6		12, 15				
		1	2, 6		52, 55				

Refer to Model Legend Information Bookmark

Side Glass, Fixed
Figure SVA-730

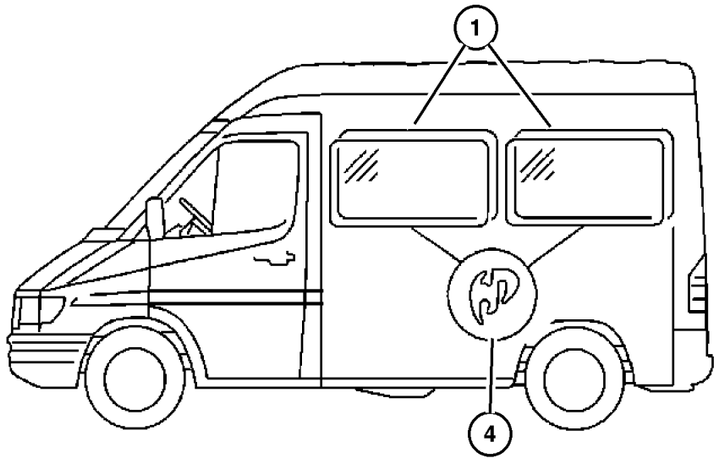

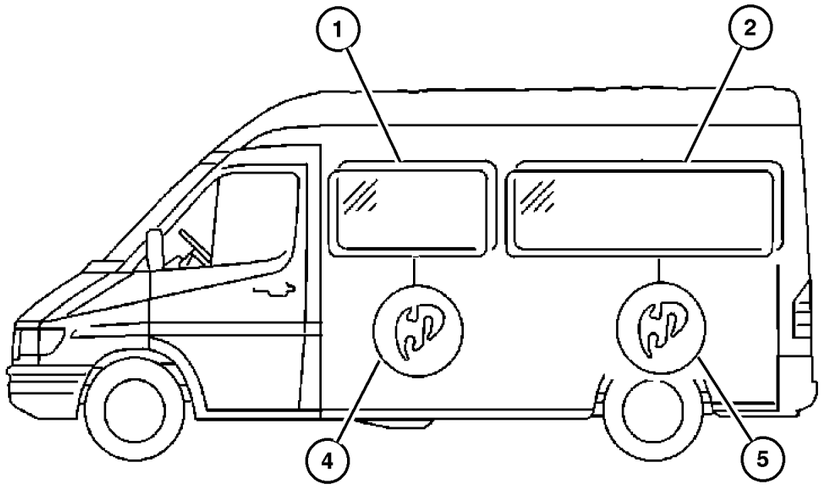

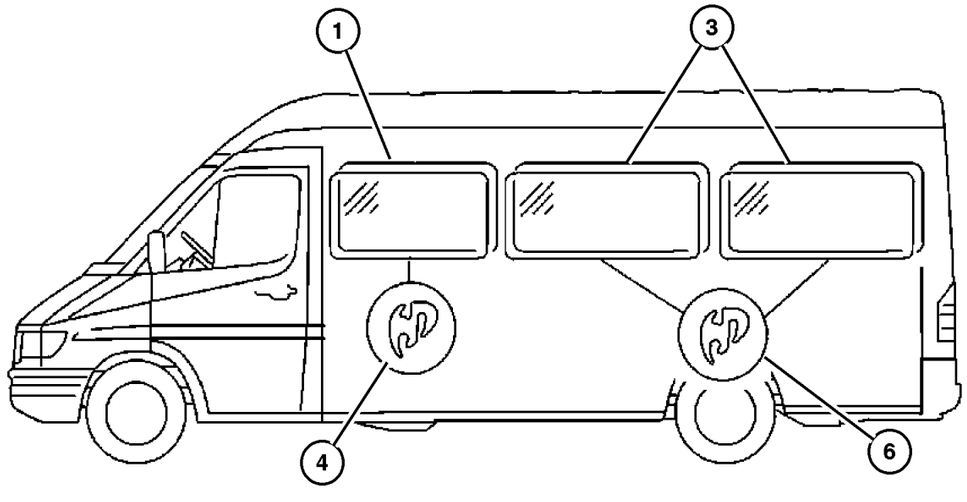

ITEM	PART NUMBER	QTY	LINE	SERIES	BODY	ENGINE	TRANS	TRIM	DESCRIPTION
		1	3, 7		12, 15				
6									SEAL, Window Opening
	5122 354AA	1	2, 6		11, 12, 14, 15, 16				
		1	2, 6		51, 52, 54, 55, 56				
		1	3, 7		12, 15, 16				

Refer to Model Legend Information Bookmark

Front Aperture, Inner, Left
Figure SVA-810

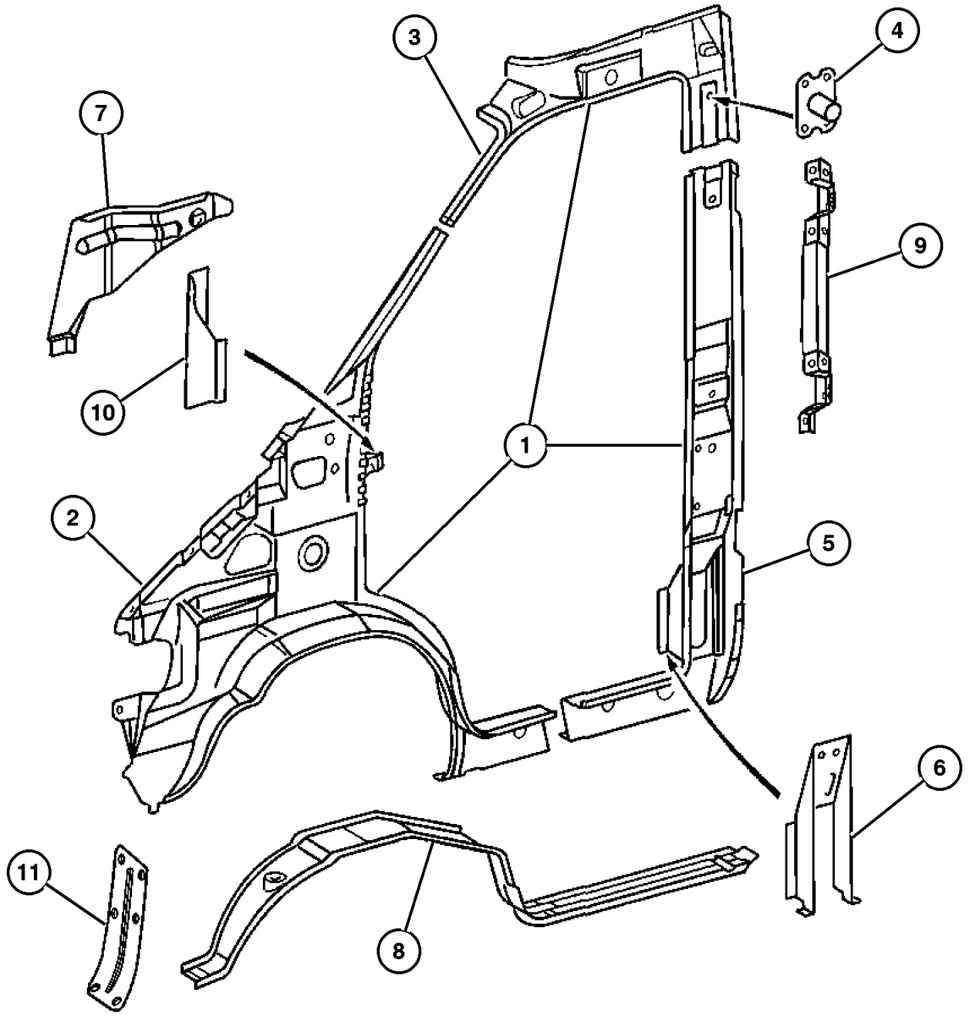

ITEM	PART NUMBER	QTY	LINE	SERIES	BODY	ENGINE	TRANS	TRIM	DESCRIPTION
1									APERTURE, Body Side Door
	5121 784AA	1	2, 6		11, 12, 14, 15, 16				Without Left Sliding Door
		1	2, 6		51, 52, 54, 55, 56				Without Left Sliding Door
		1	3, 7		12, 15, 16				Without Left Sliding Door
	5121 786AA	1	2, 6		11, 12, 14, 15, 16				With Left Sliding Door
		1	2, 6		51, 52, 54, 55, 56				With Left Sliding Door
		1	3, 7		12, 15, 16				With Left Sliding Door
2									PANEL, Body Side Aperture
	5104 184AA	1	2, 6		01, 02, 06				
		1	2, 6		11, 12, 14, 15, 16				
		1	2, 6		51, 52, 54, 55, 56				
		1	3, 7		02, 06				
		1	3, 7		12, 15, 16				
3									PANEL, Body Side Aperture
	5121 647AA	1	2, 6		11, 12, 14, 15, 16				Without Left Sliding Door
		1	2, 6		51, 52, 54, 55, 56				Without Left Sliding Door
		1	3, 7		12, 15, 16				Without Left Sliding Door
	5121 649AA	1	2, 6		01, 02, 06				With Left Sliding Door
		1	2, 6		11, 12, 14, 15, 16				With Left Sliding Door

Refer to Model Legend Information Bookmark

AR = Use as required - = Non illustrated part # = New this model year

March 3, 2006

« RETURN TO GROUP INDEX

»

Front Aperture, Inner, Left
Figure SVA-810

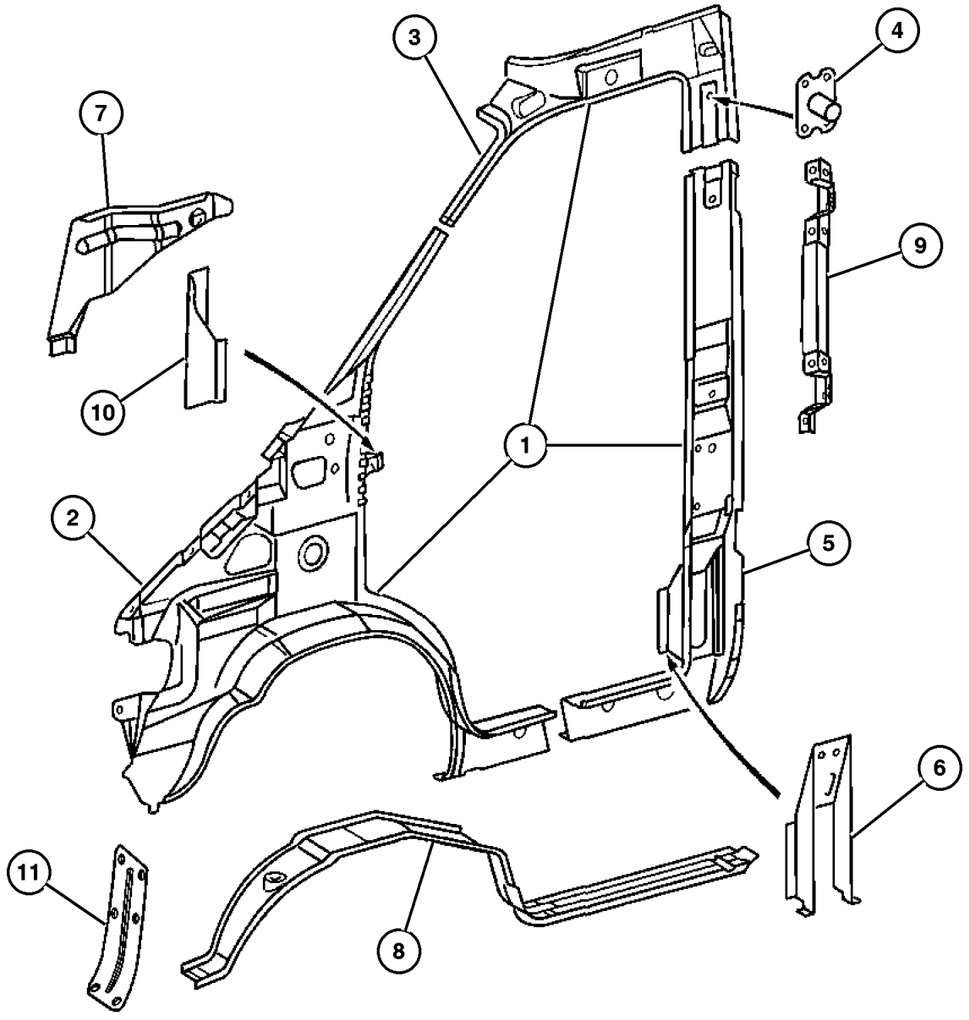

ITEM	PART NUMBER	QTY	LINE	SERIES	BODY	ENGINE	TRANS	TRIM	DESCRIPTION
		1	2, 6		51, 52, 54, 55, 56				With Left Sliding Door
		1	3, 7		12, 15, 16				With Left Sliding Door
4									TAPPING PLATE, Side Panel
	5125 412AA	1	2, 6		01, 02, 06				
		1	2, 6		11, 12, 14, 15, 16				
		1	2, 6		51, 52, 54, 55, 56				
		1	3, 7		02, 06				
		1	3, 7		12, 15, 16				
5									PILLAR, Front Door Lock
	5104 186AA	1	2, 6		11, 12, 14, 15, 16				Without Left Sliding Door
		1	2, 6		51, 52, 54, 55, 56				Without Left Sliding Door
		1	3, 7		12, 15, 16				Without Left Sliding Door
	5121 668AA	1	2, 6		01, 02, 06				With Left Sliding Door
		1	2, 6		11, 12, 14, 15, 16				With Left Sliding Door
		1	2, 6		51, 52, 54, 55, 56				With Left Sliding Door
		1	3, 7		02, 06				With Left Sliding Door
6									REINFORCEMENT, Center Pillar
	5104 189AA	1	2, 6		01, 02, 06				
		1	2, 6		11, 12, 14, 15, 16				
		1	2, 6		51, 52, 54, 55, 56				
7									BRACKET, Body Side Aperture

Refer to Model Legend Information Bookmark

AR = Use as required - = Non illustrated part # = New this model year

March 3, 2006

« RETURN TO GROUP INDEX

Front Aperture, Inner, Left
Figure SVA-810

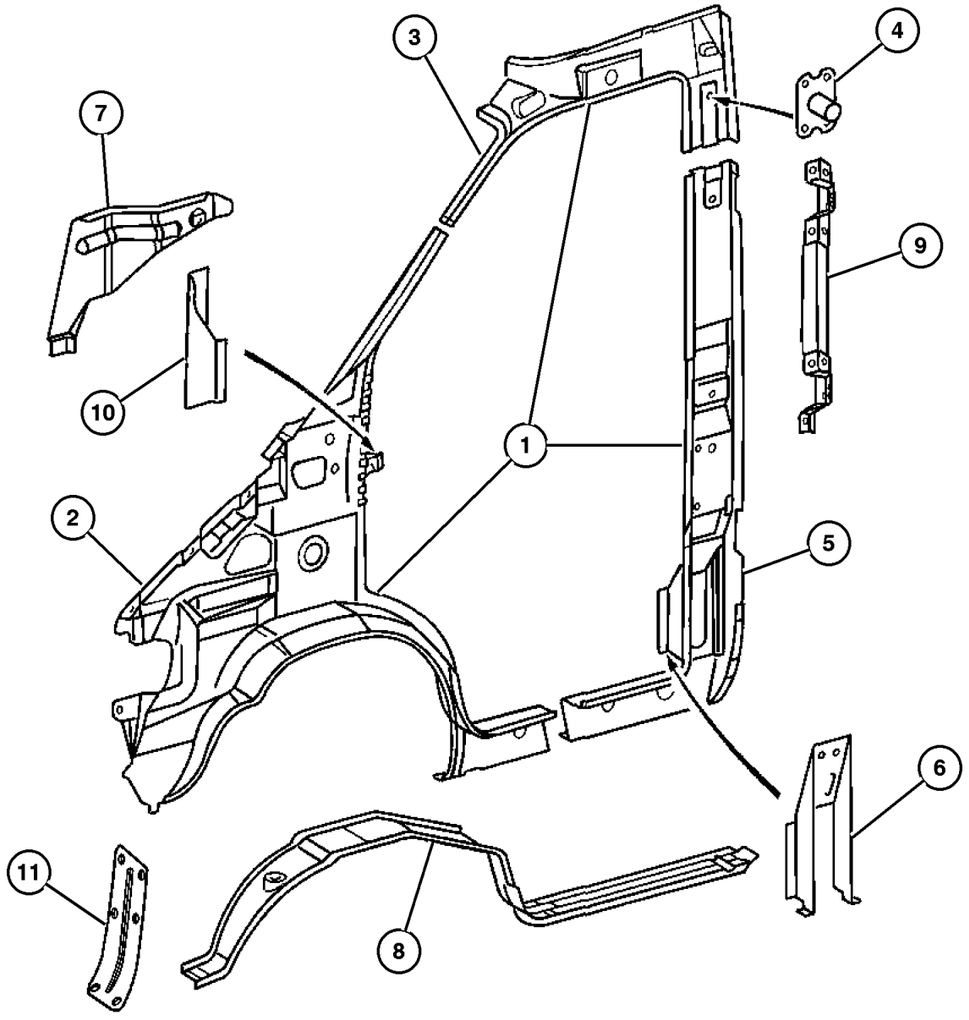

ITEM	PART NUMBER	QTY	LINE	SERIES	BODY	ENGINE	TRANS	TRIM	DESCRIPTION
	5104 193AA	1	2, 6		01, 02, 06				
		1	2, 6		11, 12, 14, 15, 16				
		1	2, 6		51, 52, 54, 55, 56				
		1	3, 7		02, 06				
		1	3, 7		12, 15, 16				
8									WHEELHOUSE, Front Inner
	5104 199AA	1	2, 6		01, 02, 06				
		1	2, 6		11, 12, 14, 15, 16				
		1	2, 6		51, 52, 54, 55, 56				
		1	3, 7		02, 06				
		1	3, 7		12, 15, 16				
9									BRACKET, Grab Handle
	5121 721AA	1	2, 6		11, 12, 14, 15, 16				
		1	2, 6		51, 52, 54, 55, 56				
		1	3, 7		12, 15, 16				
10									REINFORCEMENT, Pillar And Cowl
	5133 552AA	1	2, 6		01, 02, 06				
		1	2, 6		11, 12, 14, 15, 16				
		1	2, 6		51, 52, 54, 55, 56				
		1	3, 7		02, 06				
11									PANEL, Access
	5129 943AA	1	2, 6		01, 02, 06				

Refer to Model Legend Information Bookmark

Front Aperture, Inner, Left
Figure SVA-810

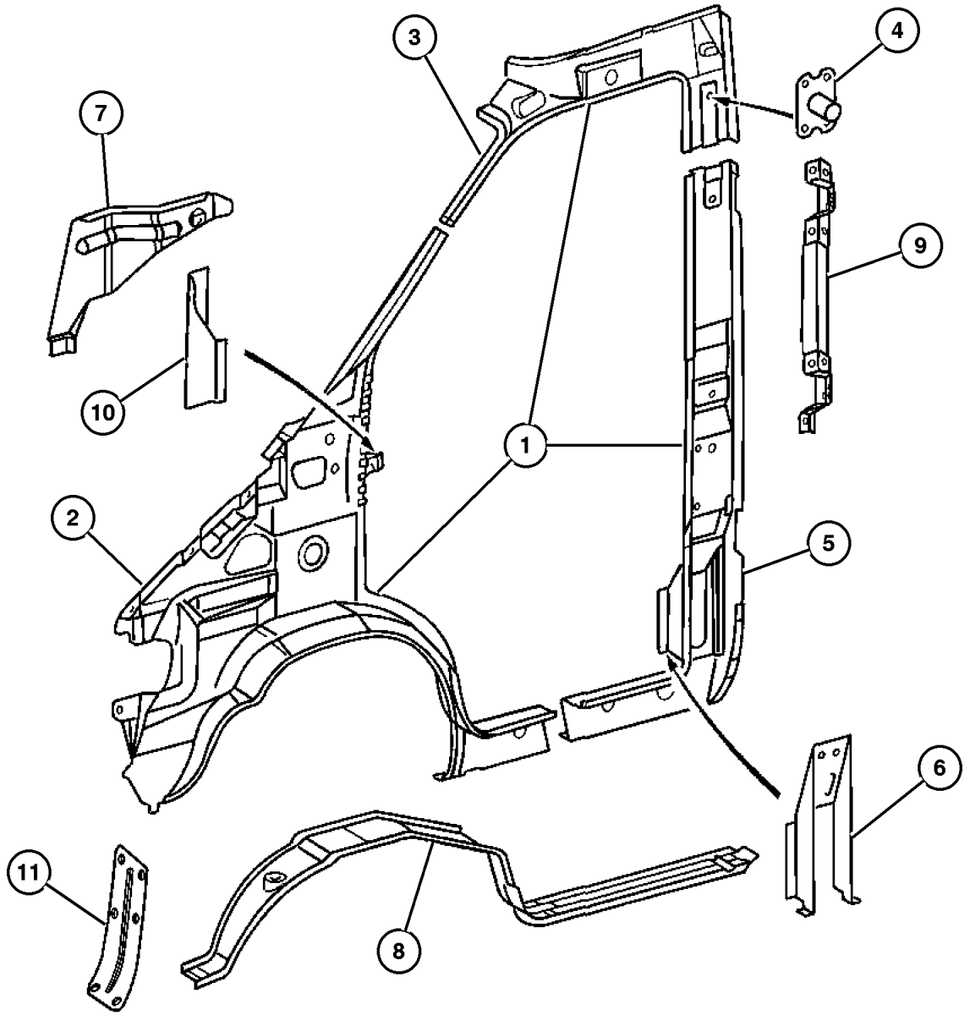

ITEM	PART NUMBER	QTY	LINE	SERIES	BODY	ENGINE	TRANS	TRIM	DESCRIPTION
		1	2, 6		11, 12, 14, 15, 16				
		1	2, 6		51, 52, 54, 55, 56				
		1	3, 7		02, 06				

Refer to Model Legend Information Bookmark

AR = Use as required - = Non illustrated part # = New this model year

March 3, 2006

« RETURN TO GROUP INDEX

Front Aperture, Outer, Left
Figure SVA-820

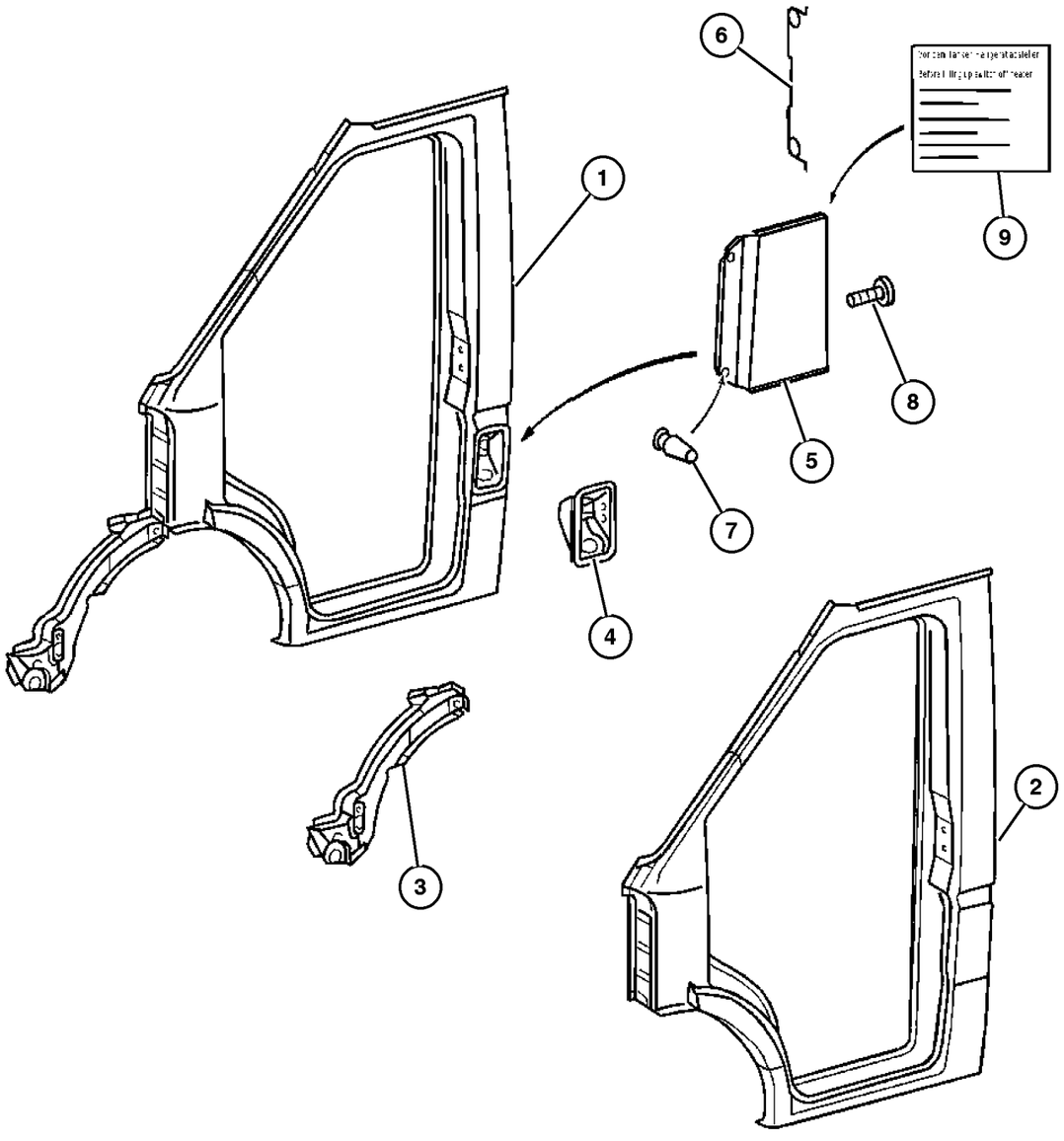

ITEM	PART NUMBER	QTY	LINE	SERIES	BODY	ENGINE	TRANS	TRIM	DESCRIPTION
1									APERTURE, Body Side Door, Complete
	5104 182AA	1	2, 6		01, 02, 06				
		1	2, 6		11, 12, 14, 15, 16				
		1	2, 6		51, 52, 54, 55, 56				
		1	3, 7		02, 06				
		1	3, 7		12, 15, 16				
2									APERTURE, Body Side Door, Skin Only, With No Full Door Cutout
	5104 220AA	1	2, 6		01, 02, 06				
		1	2, 6		11, 12, 14, 15, 16				
		1	2, 6		51, 52, 54, 55, 56				
		1	3, 7		02, 06				
		1	3, 7		12, 15, 16				
3									PANEL, Fender Extentsion
	5104 192AA	1	2, 6		01, 02, 06				
		1	2, 6		11, 12, 14, 15, 16				
		1	2, 6		51, 52, 54, 55, 56				
		1	3, 7		02, 06				
		1	3, 7		12, 15, 16				
4									HOUSING, Fuel Filler
	5104 167AA	1	2, 6		11, 12, 14, 15, 16				
		1	2, 6		51, 52, 54, 55, 56				

Refer to Model Legend Information Bookmark

Front Aperture, Outer, Left
Figure SVA-820

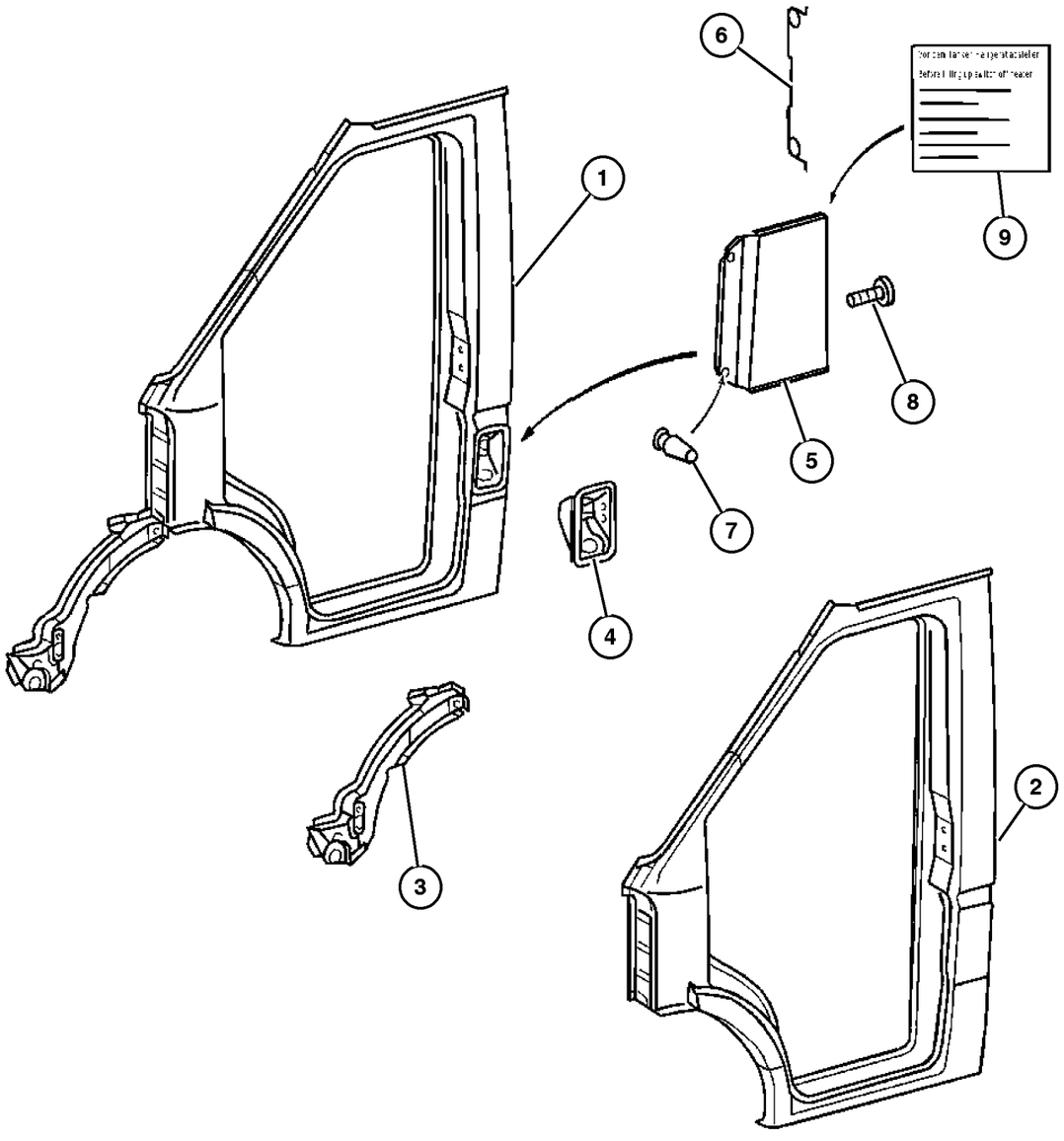

ITEM	PART NUMBER	QTY	LINE	SERIES	BODY	ENGINE	TRANS	TRIM	DESCRIPTION
		1	3, 7		12, 15, 16				
5									DOOR, Fuel Fill
	5104 399AA	1	2, 6		01, 02, 06				
		1	2, 6		11, 12, 14, 15, 16				
		1	2, 6		51, 52, 54, 55, 56				
6									SPRING, Fuel Filler Door
	5104 408AA	1	2, 6		01, 02, 06				
		1	2, 6		11, 12, 14, 15, 16				
		1	2, 6		51, 52, 54, 55, 56				
7									BUMPER, Fuel Door
	5103 917AA	2	2, 6		01, 02, 06				
		2	2, 6		11, 12, 14, 15, 16				
		2	2, 6		51, 52, 54, 55, 56				
8									SCREW
	5073 685AA	2	2, 6		01, 02, 06				
		2	2, 6		11, 12, 14, 15, 16				
		2	2, 6		51, 52, 54, 55, 56				
9									LABEL, Fuel
	5104 152AA	1	2, 6		01, 02, 06				
		1	2, 6		11, 12, 14, 15, 16				

Refer to Model Legend Information Bookmark

Front Aperture, Outer, Left
Figure SVA-820

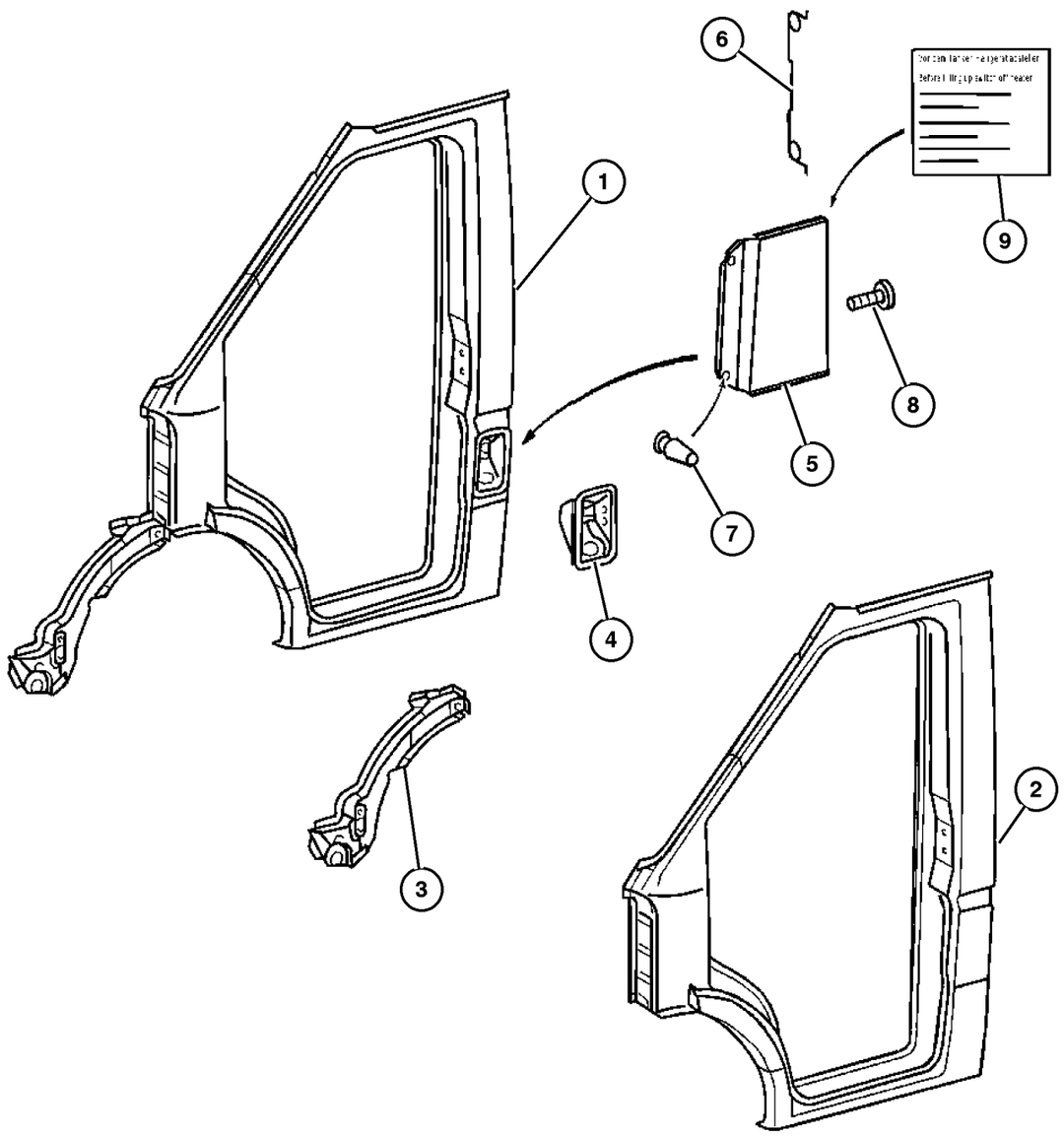

ITEM	PART NUMBER	QTY	LINE	SERIES	BODY	ENGINE	TRANS	TRIM	DESCRIPTION
		1	2, 6		51, 52, 54, 55, 56				
		1	3, 7		02, 06				
		1	3, 7		12, 15, 16				

Refer to Model Legend Information Bookmark

Front Aperture, Inner, Right
Figure SVA-830

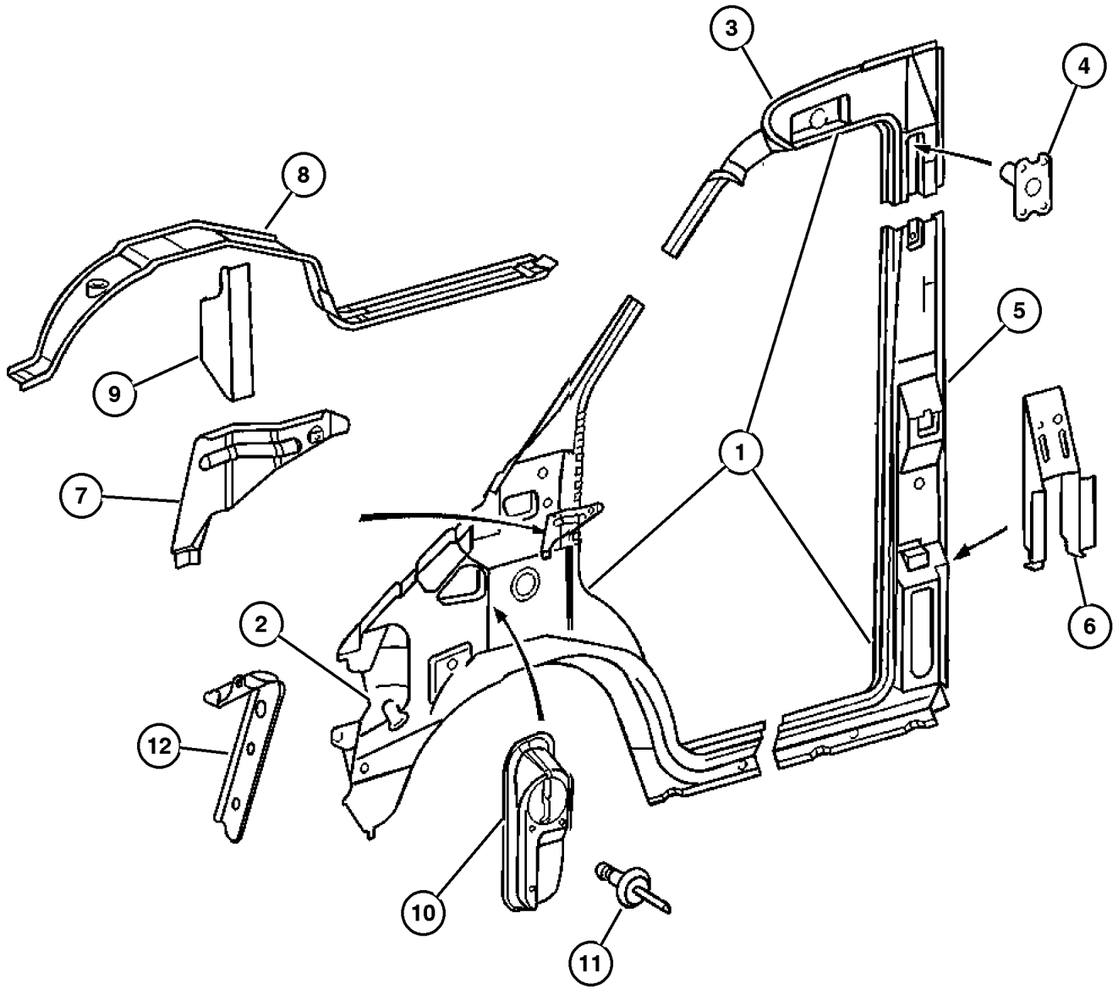

ITEM	PART NUMBER	QTY	LINE	SERIES	BODY	ENGINE	TRANS	TRIM	DESCRIPTION
1									APERTURE, Body Side Door
	5104 183AA	1	2, 6		11, 12, 14, 15, 16				With Sliding Door
		1	2, 6		51, 52, 54, 55, 56				With Sliding Door
		1	3, 7		12, 15, 16				With Sliding Door
	5121 659AA	1	2, 6		11, 12, 14, 15, 16				Without Sliding Door
		1	2, 6		51, 52, 54, 55, 56				Without Sliding Door
		1	3, 7		12, 15, 16				Without Sliding Door
2									PANEL, Body Side Aperture
	5104 185AA	1	2, 6		01, 02, 06				
		1	2, 6		11, 12, 14, 15, 16				
		1	2, 6		51, 52, 54, 55, 56				
		1	3, 7		02, 06				
		1	3, 7		12, 15, 16				
3									PANEL, Body Side Aperture
	5121 648AA	1	2, 6		11, 12, 14, 15, 16				Without Sliding Door
		1	2, 6		51, 52, 54, 55, 56				Without Sliding Door
		1	3, 7		12, 15, 16				Without Sliding Door
	5121 650AA	1	2, 6		01, 02, 06				With Sliding Door
		1	2, 6		11, 12, 14, 15, 16				With Sliding Door

Refer to Model Legend Information Bookmark

AR = Use as required - = Non illustrated part # = New this model year

March 3, 2006

« RETURN TO GROUP INDEX

»

Front Aperture, Inner, Right
Figure SVA-830

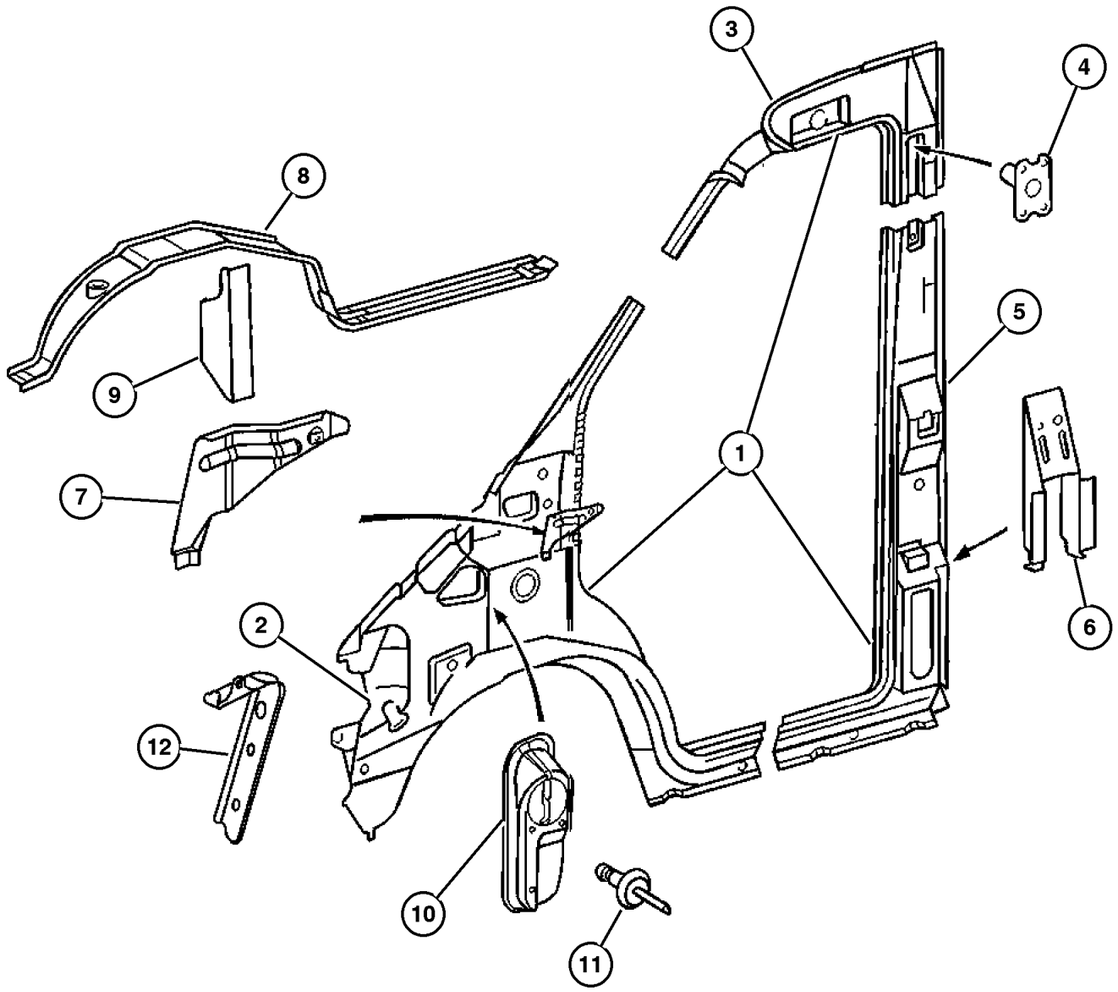

ITEM	PART NUMBER	QTY	LINE	SERIES	BODY	ENGINE	TRANS	TRIM	DESCRIPTION
		1	2, 6		51, 52, 54, 55, 56				With Sliding Door
		1	3, 7		12, 15, 16				With Sliding Door
4									TAPPING PLATE, Side Panel
	5125 412AA	1	2, 6		01, 02, 06				
		1	2, 6		11, 12, 14, 15, 16				
		1	2, 6		51, 52, 54, 55, 56				
		1	3, 7		02, 06				
		1	3, 7		12, 15, 16				
5									PANEL, Body Side Aperture
	5121 644AA	1	2, 6		11, 12, 14, 15, 16				Without Sliding Door
		1	2, 6		51, 52, 54, 55, 56				Without Sliding Door
		1	3, 7		12, 15, 16				Without Sliding Door
	5121 645AA	1	2, 6		01, 02, 06				With Sliding Door
		1	2, 6		11, 12, 14, 15, 16				With Sliding Door
		1	2, 6		51, 52, 54, 55, 56				With Sliding Door
		1	3, 7		02, 06				With Sliding Door
6									REINFORCEMENT, Center Pillar
	5104 189AA	1	2, 6		01, 02, 06				
		1	2, 6		11, 12, 14, 15, 16				
		1	2, 6		51, 52, 54, 55, 56				
7									BRACKET, Instrument Panel

Refer to Model Legend Information Bookmark

Front Aperture, Inner, Right
Figure SVA-830

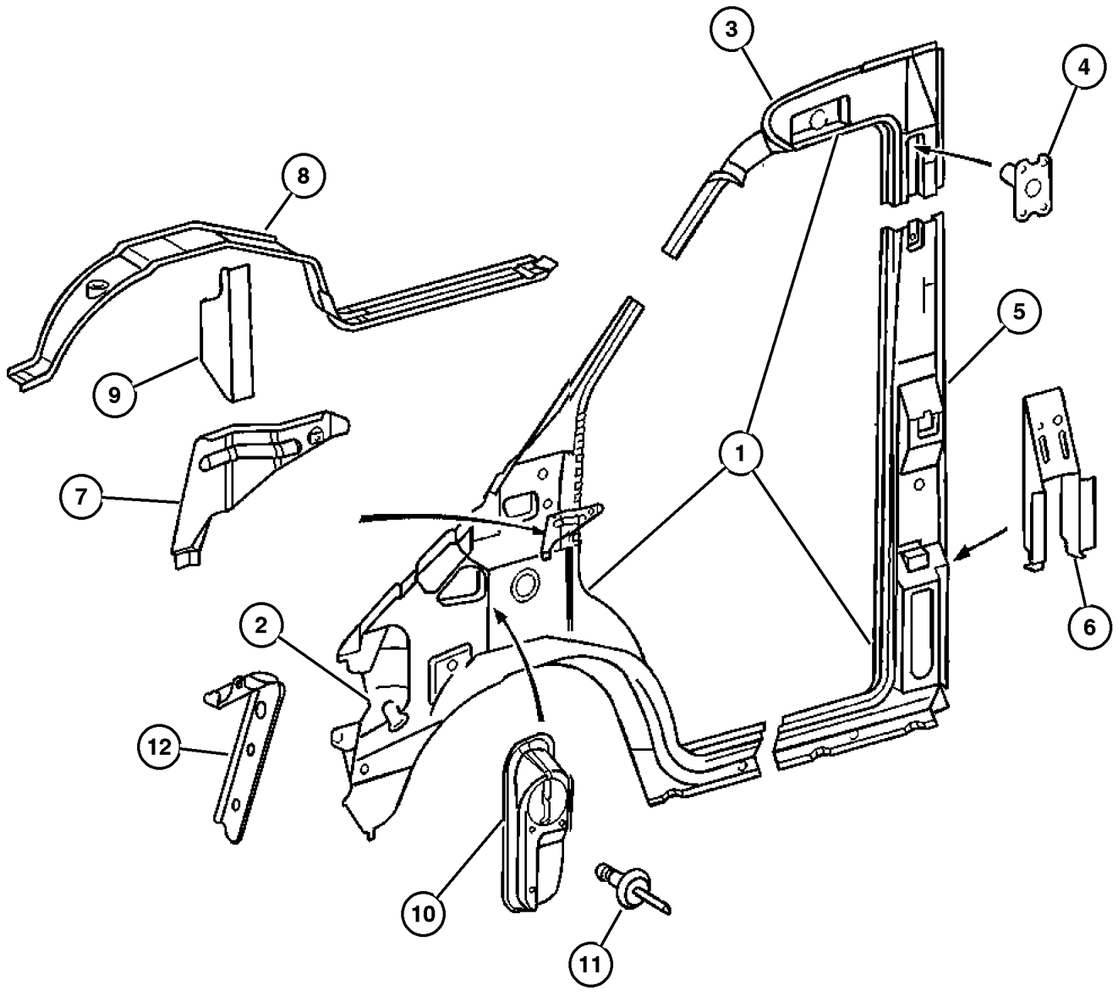

ITEM	PART NUMBER	QTY	LINE	SERIES	BODY	ENGINE	TRANS	TRIM	DESCRIPTION
	5104 195AA	1	2, 6		01, 02, 06				
		1	2, 6		11, 12, 14, 15, 16				
		1	2, 6		51, 52, 54, 55, 56				
		1	3, 7		02, 06				
		1	3, 7		12, 15, 16				
8	5104 200AA	1	2, 6		01, 02, 06				WHEELHOUSE, Front Inner
		1	2, 6		11, 12, 14, 15, 16				
		1	2, 6		51, 52, 54, 55, 56				
		1	3, 7		02, 06				
		1	3, 7		12, 15, 16				
9	5133 552AA	1	2, 6		01, 02, 06				REINFORCEMENT, Pillar And Cowl
		1	2, 6		11, 12, 14, 15, 16				
		1	2, 6		51, 52, 54, 55, 56				
		1	3, 7		02, 06				
		1	3, 7		12, 15, 16				
10	5104 187AA	1	2, 6		01, 02, 06				BUSHING, Door Aperture
		1	2, 6		11, 12, 14, 15, 16				
		1	2, 6		51, 52, 54, 55, 56				
		1	3, 7		02, 06				

Refer to Model Legend Information Bookmark

Front Aperture, Inner, Right
Figure SVA-830

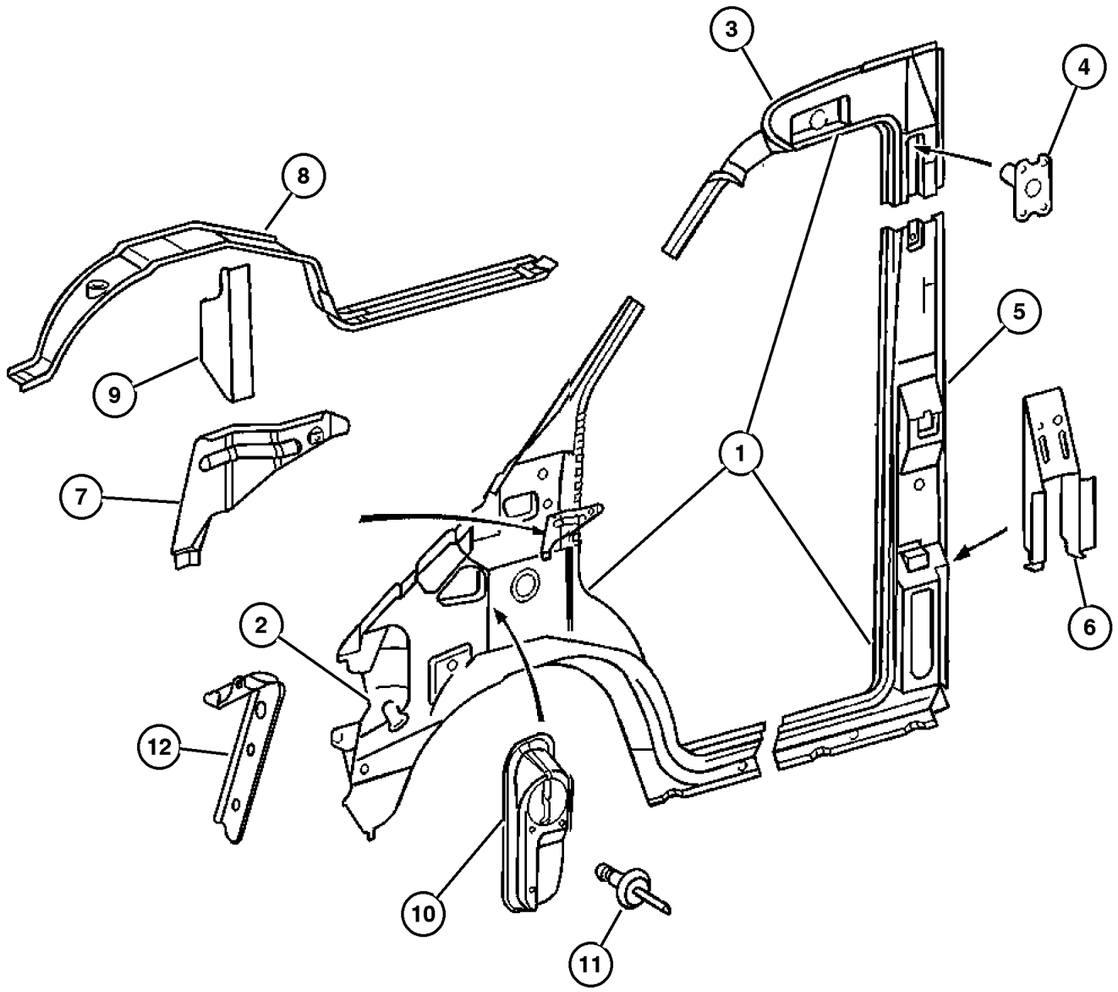

ITEM	PART NUMBER	QTY	LINE	SERIES	BODY	ENGINE	TRANS	TRIM	DESCRIPTION
		1	3, 7		12, 15, 16				
11	5133 554AA	3	2, 6		01, 02, 06				RIVET
		3	2, 6		11, 12, 14, 15, 16				
		3	2, 6		51, 52, 54, 55, 56				
		3	3, 7		02, 06				
		3	3, 7		12, 15, 16				
12	5122 859AA	1	2, 6		01, 02, 06				COVER
		1	2, 6		11, 12, 14, 15, 16				
		1	2, 6		51, 52, 54, 55, 56				
		1	3, 7		02, 06				
		1	3, 7		12, 15, 16				

Refer to Model Legend Information Bookmark

AR = Use as required - = Non illustrated part # = New this model year

March 3, 2006

« RETURN TO GROUP INDEX

Front Aperture, Outer, Right
Figure SVA-840

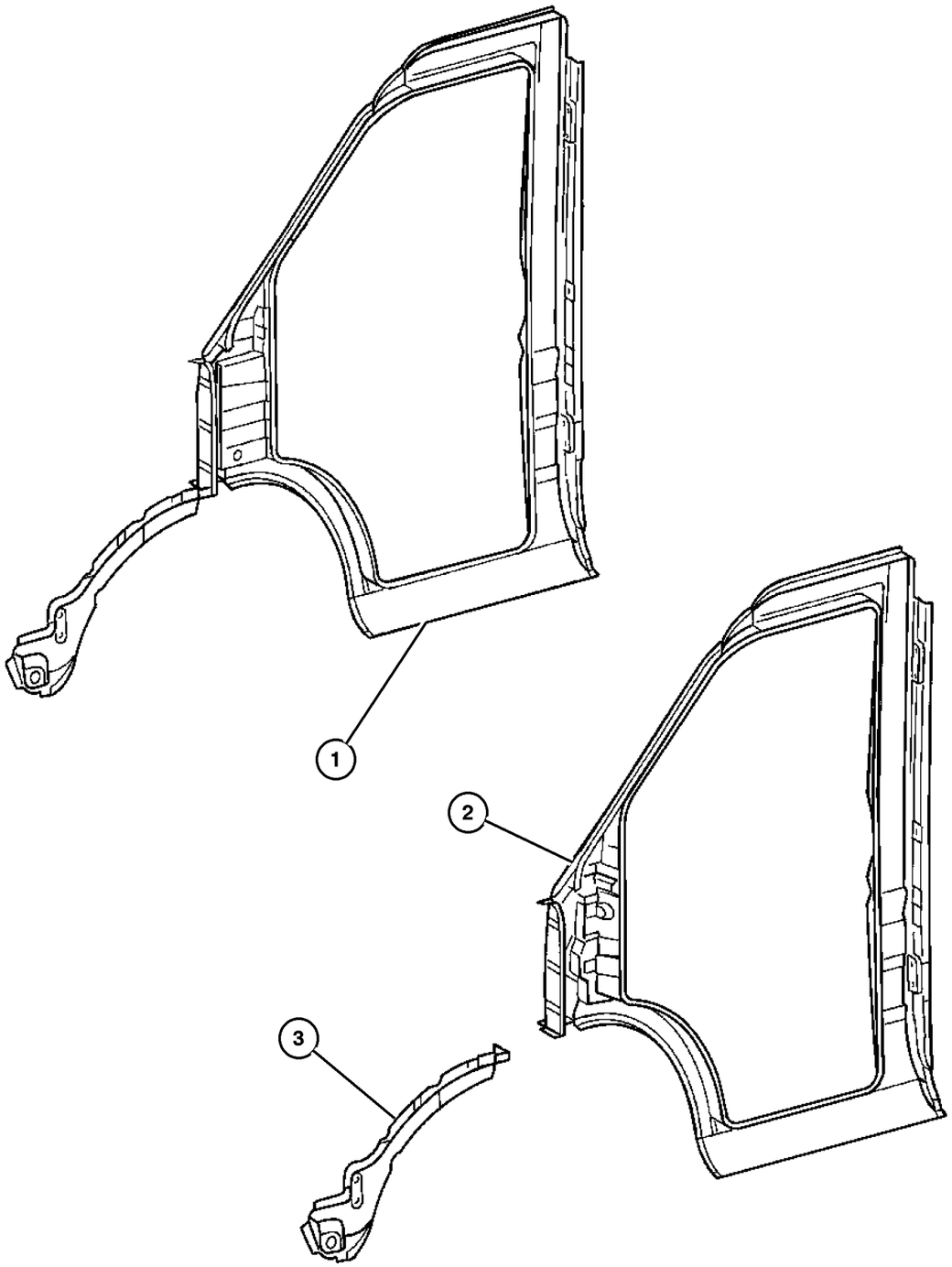

ITEM	PART NUMBER	QTY	LINE	SERIES	BODY	ENGINE	TRANS	TRIM	DESCRIPTION
1									APERTURE, Body Side Door
	5121 683AA	1	2, 6		01, 02, 06				
		1	2, 6		11, 12, 14, 15, 16				
		1	2, 6		51, 52, 54, 55, 56				
		1	3, 7		02, 06				
		1	3, 7		12, 15, 16				
2									APERTURE, Body Side Door
	5104 221AA	1	2, 6		01, 02, 06				
		1	2, 6		11, 12, 14, 15, 16				
		1	2, 6		51, 52, 54, 55, 56				
		1	3, 7		02, 06				
		1	3, 7		12, 15, 16				
3									PANEL, Fender Extentsion
	5104 190AA	1	2, 6		01, 02, 06				
		1	2, 6		11, 12, 14, 15, 16				
		1	2, 6		51, 52, 54, 55, 56				
		1	3, 7		02, 06				
		1	3, 7		12, 15, 16				

Refer to Model Legend Information Bookmark

AR = Use as required - = Non illustrated part # = New this model year

March 3, 2006

RETURN TO GROUP INDEX

Right Side Cargo Door Pillars & Wheelhouse
Figure SVA-910

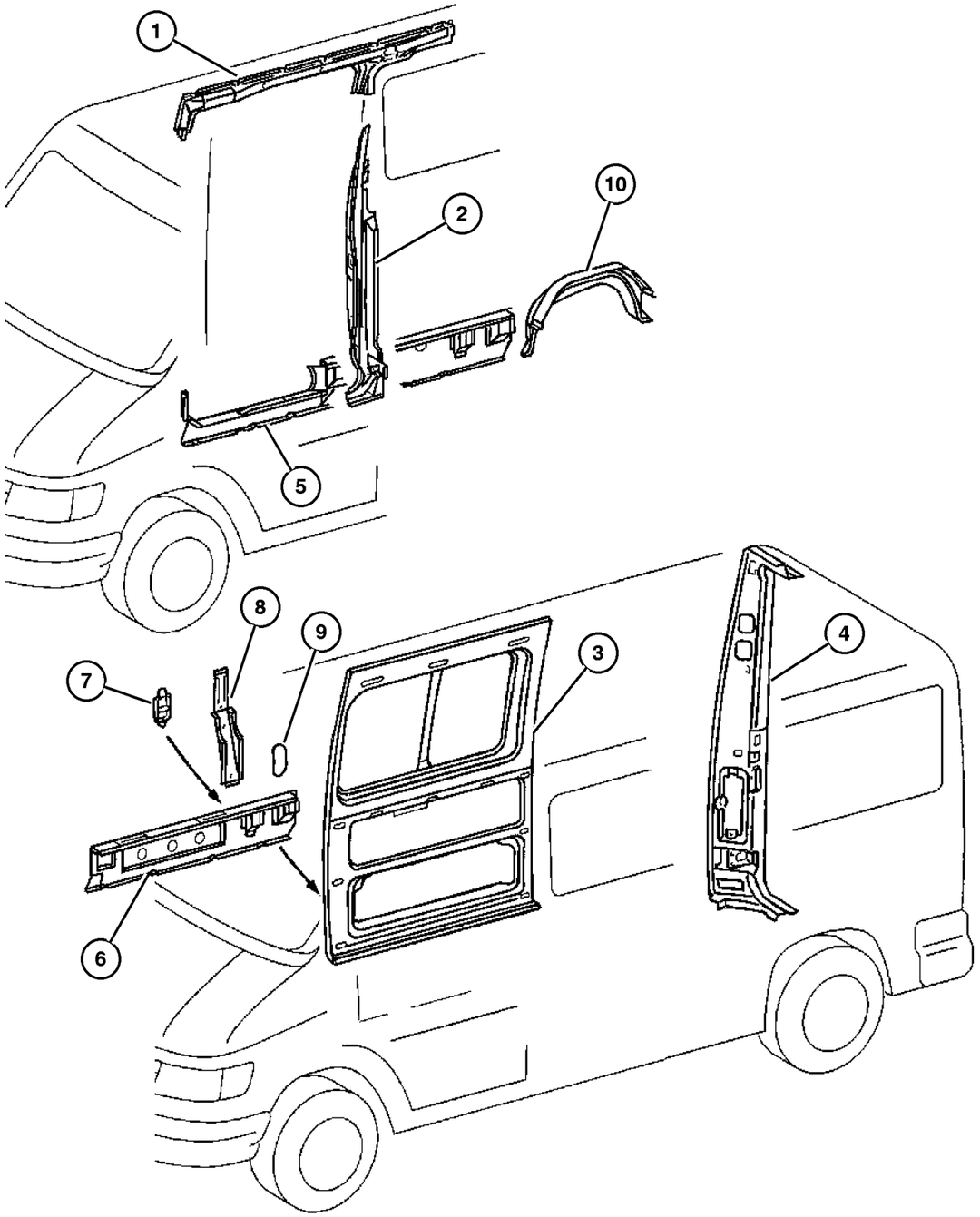

ITEM	PART NUMBER	QTY	LINE	SERIES	BODY	ENGINE	TRANS	TRIM	DESCRIPTION
1									REINFORCEMENT, Body Side Aperture
	5104 204AA	1	2, 6		11, 12, 14, 15, 16				
		1	2, 6		51, 52, 54, 55, 56				
		1	3, 7		12, 15, 16				
2									PILLAR, Side Cargo Door
	5104 166AA	1	2, 6		12, 15				[140 & 158 Inch Wheelbase]
		1	2, 6		12, 15, 16				[140 & 158 Inch Wheelbase]
		1	2, 6		52, 55				[140 & 158 Inch Wheelbase]
		1	2, 6		52, 55, 56				[140 & 158 Inch Wheelbase]
		1	3, 7		12, 15				[140 & 158 Inch Wheelbase]
	5121 699AA	1	2, 6		11, 14				[118] Inch Wheelbase
		1	2, 6		51, 54				[118] Inch Wheelbase
3									PANEL, Body Side Front
	5104 197AA	1	2, 6		11, 12, 14, 15, 16				
		1	2, 6		51, 52, 54, 55, 56				
		1	3, 7		12, 15, 16				
4									PILLAR, Rear Cargo Door Hinge
	5104 178AA	1	2, 6		14, 15, 16				High Roof
		1	2, 6		54, 55, 56				High Roof
		1	3, 7		15, 16				High Roof
	5121 908AA	1	2, 6		11, 12				Low Roof
		1	2, 6		51, 52				Low Roof
		1	3, 7		12				Low Roof
5									SUPPORT, Sill Reinforcement
	5104 171AA	1	2, 6		11, 14				[118] Inch Wheelbase
		1	2, 6		51, 54				[118] Inch Wheelbase
	5121 747AA	1	2, 6		16				[158] Inch Wheelbase,Without Right Sliding Door
		1	2, 6		56				[158] Inch Wheelbase,Without Right Sliding Door

Refer to Model Legend Information Bookmark

AR = Use as required - = Non illustrated part # = New this model year

March 3, 2006

« RETURN TO GROUP INDEX

»

Right Side Cargo Door Pillars & Wheelhouse
Figure SVA-910

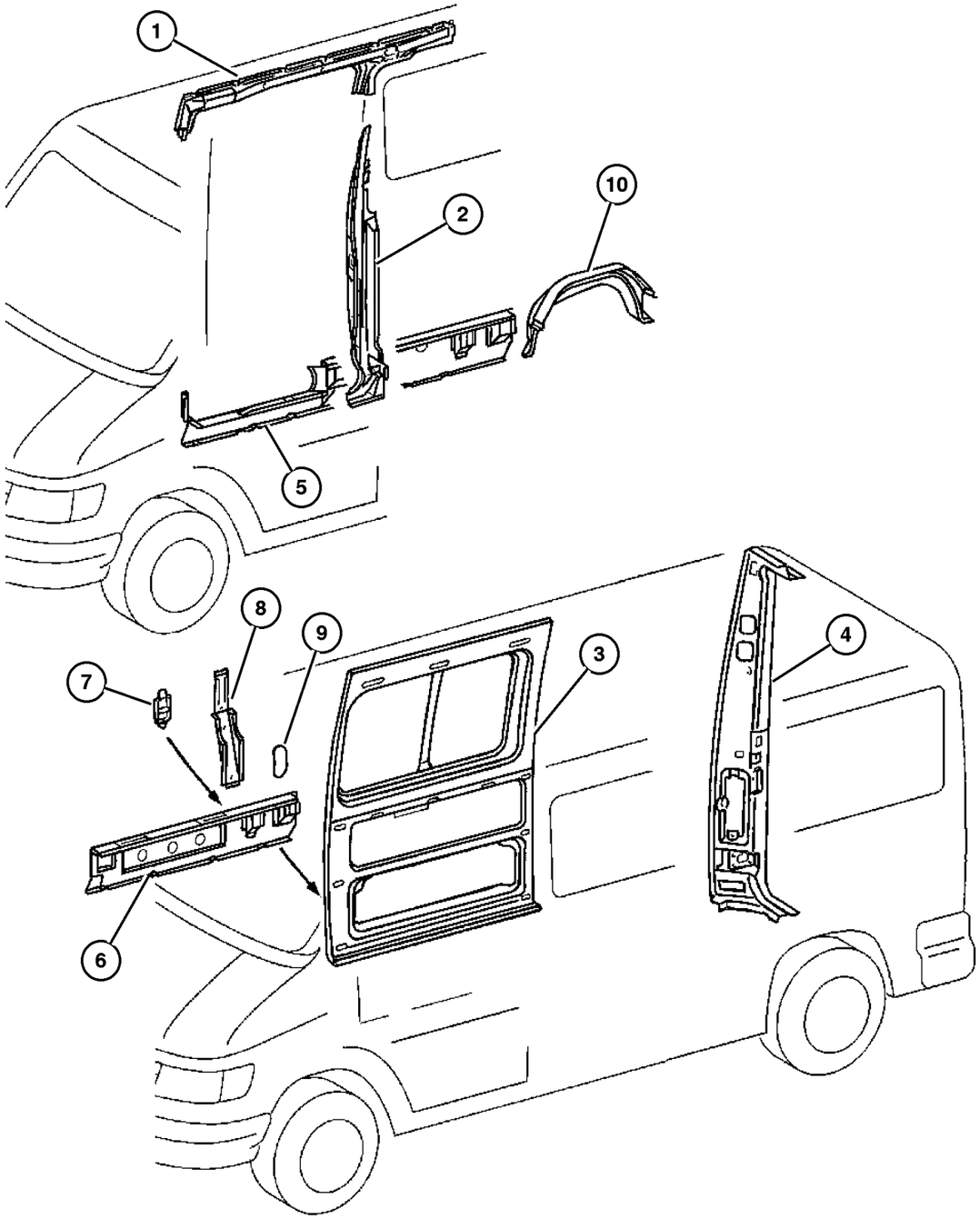

ITEM	PART NUMBER	QTY	LINE	SERIES	BODY	ENGINE	TRANS	TRIM	DESCRIPTION
		1	3, 7		16				[158] Inch Wheelbase,Without Right Sliding Door
	5121 752AA	1	2, 6		12, 15				[140] Inch Wheelbase
		1	2, 6		52, 55				[140] Inch Wheelbase
	5121 755AA	1	2, 6		16				[158] Inch Wheelbase,With Right Sliding Door
		1	2, 6		56				[158] Inch Wheelbase,With Right Sliding Door
	5121 776AA	1	3, 7		12, 15				[140] Inch Wheelbase
	5121 780AA	1	3, 7		16				[158] Inch Wheelbase,With Right Sliding Door
6									SUPPORT, Sill Reinforcement
	5121 743AA	1	2, 6		12, 15				[140] Inch Wheelbase,With Right Sliding Door
		1	2, 6		52, 55				[140] Inch Wheelbase,With Right Sliding Door
		1	3, 7		12, 15				[140] Inch Wheelbase,With Right Sliding Door
	5121 766AA	1	3, 7		12, 15				[140] Inch Wheelbase,Without Right Sliding Door
	5131 075AA	1	2, 6		11, 14				[118] Inch Wheelbase, Without Right Sliding Door
		1	2, 6		51, 54				[118] Inch Wheelbase, Without Right Sliding Door
	5131 079AA	1	2, 6		12, 15				[140] Inch Wheelbase,Without Right Sliding Door
		1	2, 6		52, 55				[140] Inch Wheelbase,Without Right Sliding Door
	5131 083AA	1	2, 6		16				[158] Inch Wheelbase,Without Right Sliding Door
		1	2, 6		56				
7									PLUG, Body
	5125 519AA	2	2, 6		12, 15				
		1	2, 6		11, 14				
		2	2, 6		52, 55				
		1	2, 6		51, 54				
		1	3, 7		12, 15, 16				
8									REINFORCEMENT, Side Panel
	5104 198AA	1	2, 6		12, 15				
		1	2, 6		52, 55				
		1	3, 7		12, 15, 16				
9									COVER, Sill

Refer to Model Legend Information Bookmark

AR = Use as required - = Non illustrated part # = New this model year

March 3, 2006

« RETURN TO GROUP INDEX

Right Side Cargo Door Pillars & Wheelhouse
Figure SVA-910

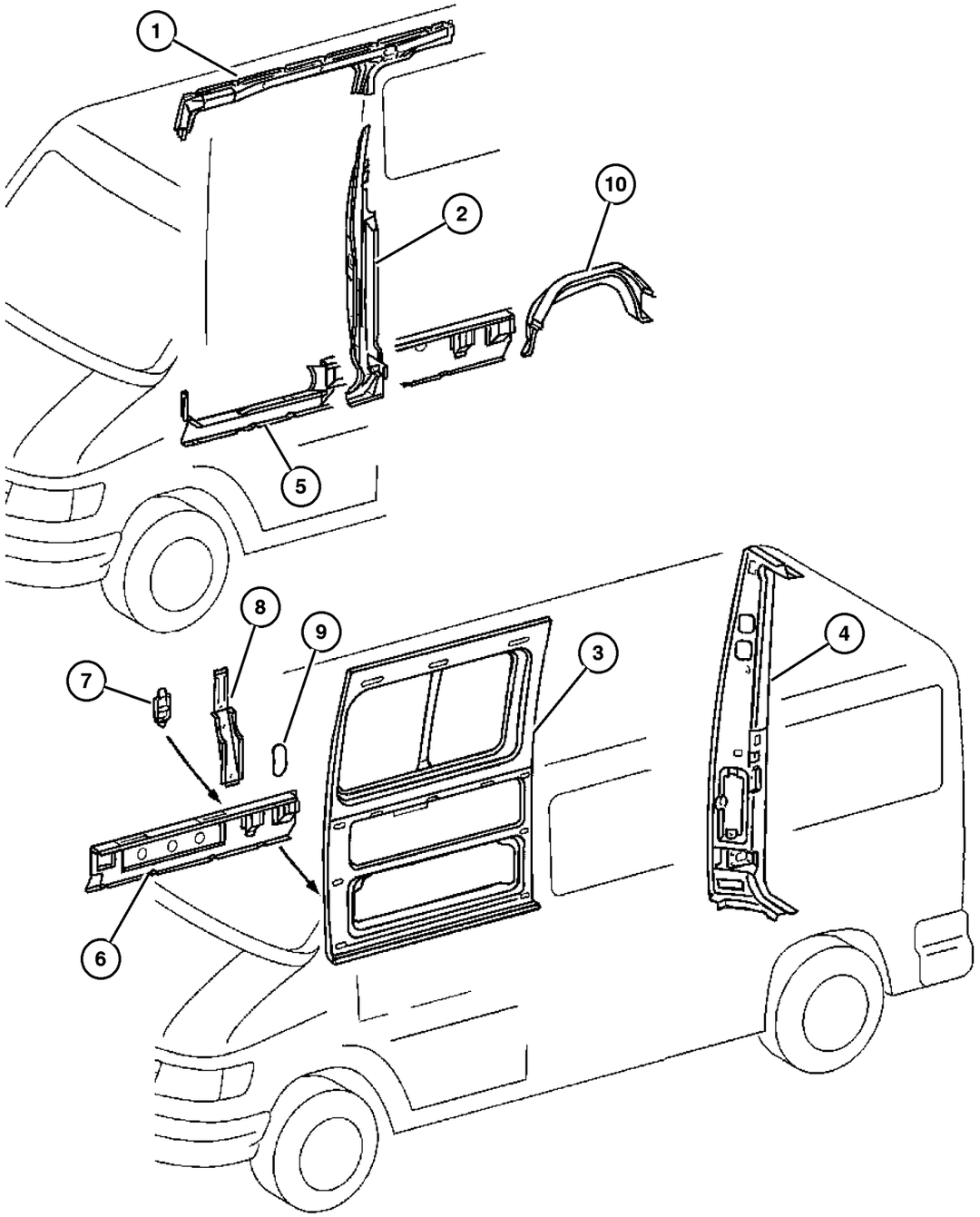

ITEM	PART NUMBER	QTY	LINE	SERIES	BODY	ENGINE	TRANS	TRIM	DESCRIPTION
	5121 838AA	1	2, 6		11, 12, 14, 15, 16				
		1	2, 6		51, 52, 54, 55, 56				
		1	3, 7		12, 15, 16				
10									WHEELHOUSE
	5121 862AA	1	2, 6		11, 12, 14, 15, 16				
		1	2, 6		51, 52, 54, 55, 56				
	5121 865AA	1	2, 6		11, 12, 14, 15, 16				With [WDG], 16x6 Steel Wheels
		1	2, 6		51, 52, 54, 55, 56				With [WDG], 16x6 Steel Wheels
		1	3, 7		12, 15, 16				With [WDG], 16x6 Steel Wheels

Refer to Model Legend Information Bookmark

Right Side Panels, Cargo
Figure SVA-920

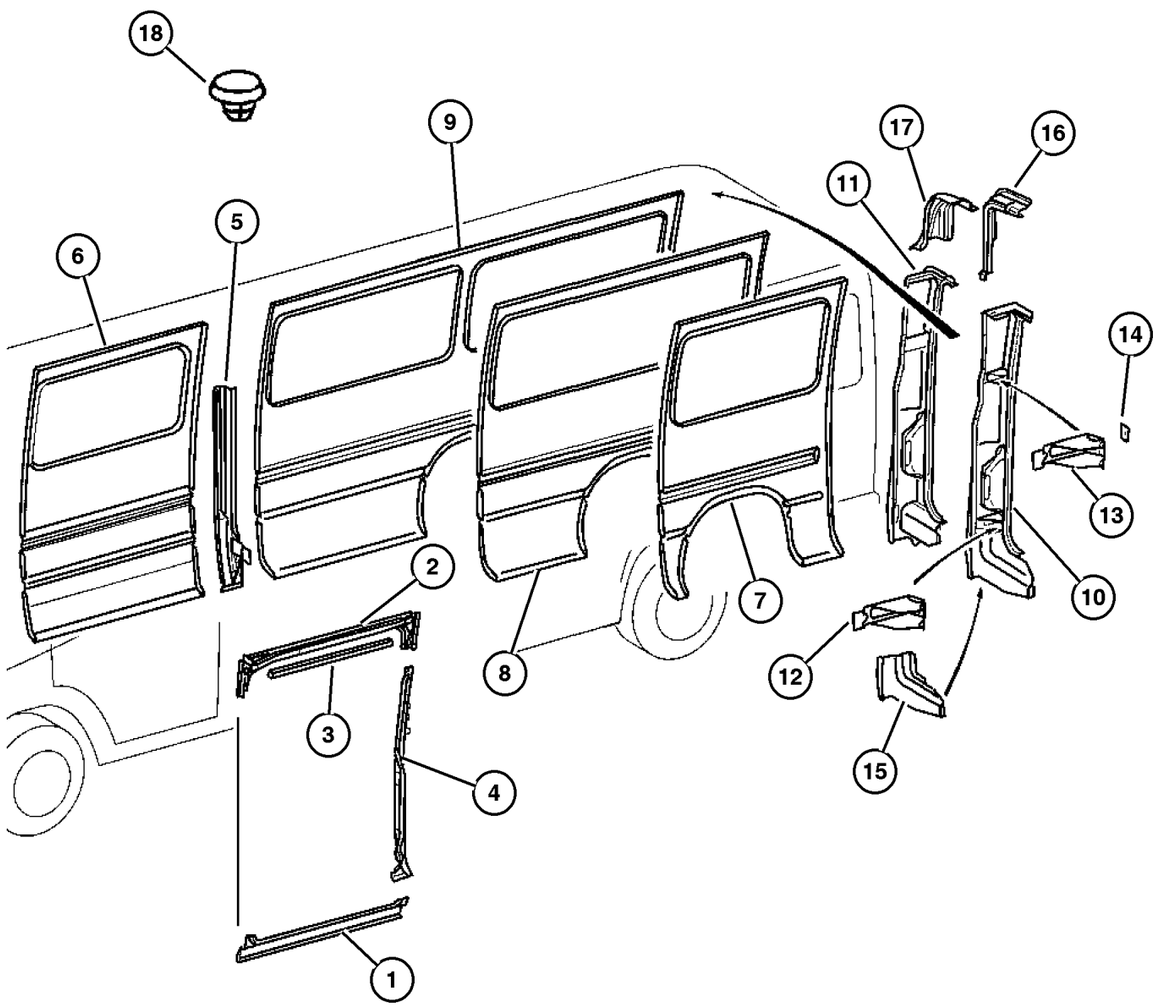

ITEM	PART NUMBER	QTY	LINE	SERIES	BODY	ENGINE	TRANS	TRIM	DESCRIPTION
1									PANEL, Sill
	5104 214AA	1	2, 6		11, 12, 14, 15, 16				
		1	2, 6		51, 52, 54, 55, 56				
		1	3, 7		12, 15, 16				
2									PANEL, Cargo Compartment, Upper
	5104 179AA	1	2, 6		11, 12, 14, 15, 16				
		1	2, 6		51, 52, 54, 55, 56				
		1	3, 7		12, 15, 16				
3									TRACK, Sliding Door
	5122 036AA	1	2, 6		11, 12, 14, 15, 16				
		1	2, 6		51, 52, 54, 55, 56				
		1	3, 7		12, 15, 16				
4									PILLAR, Side Cargo Door
	5104 166AA	1	2, 6		12, 15				[140 & 158] Inch Wheelbase
		1	2, 6		52, 55				[140 & 158] Inch Wheelbase
		1	3, 7		12, 15				[140 & 158] Inch Wheelbase
	5121 699AA	1	2, 6		11, 14				[118] Inch Wheelbase
		1	2, 6		51, 54				[118] Inch Wheelbase
5									PILLAR, Side Cargo Door
	5121 704AA	1	2, 6		12, 15				[140 & 158] Inch Wheelbase
		1	2, 6		52, 55				[140 & 158] Inch Wheelbase
		1	3, 7		12, 15				[140 & 158] Inch Wheelbase
	5131 053AA	1	2, 6		11, 14				[118] Inch wheelbase
		1	2, 6		51, 54				[118] Inch wheelbase
6									PANEL, Body Side Front
	5104 205AA	1	2, 6		11, 12, 14, 15, 16				

Refer to Model Legend Information Bookmark

AR = Use as required - = Non illustrated part # = New this model year

March 3, 2006

« RETURN TO GROUP INDEX

»

Right Side Panels, Cargo
Figure SVA-920

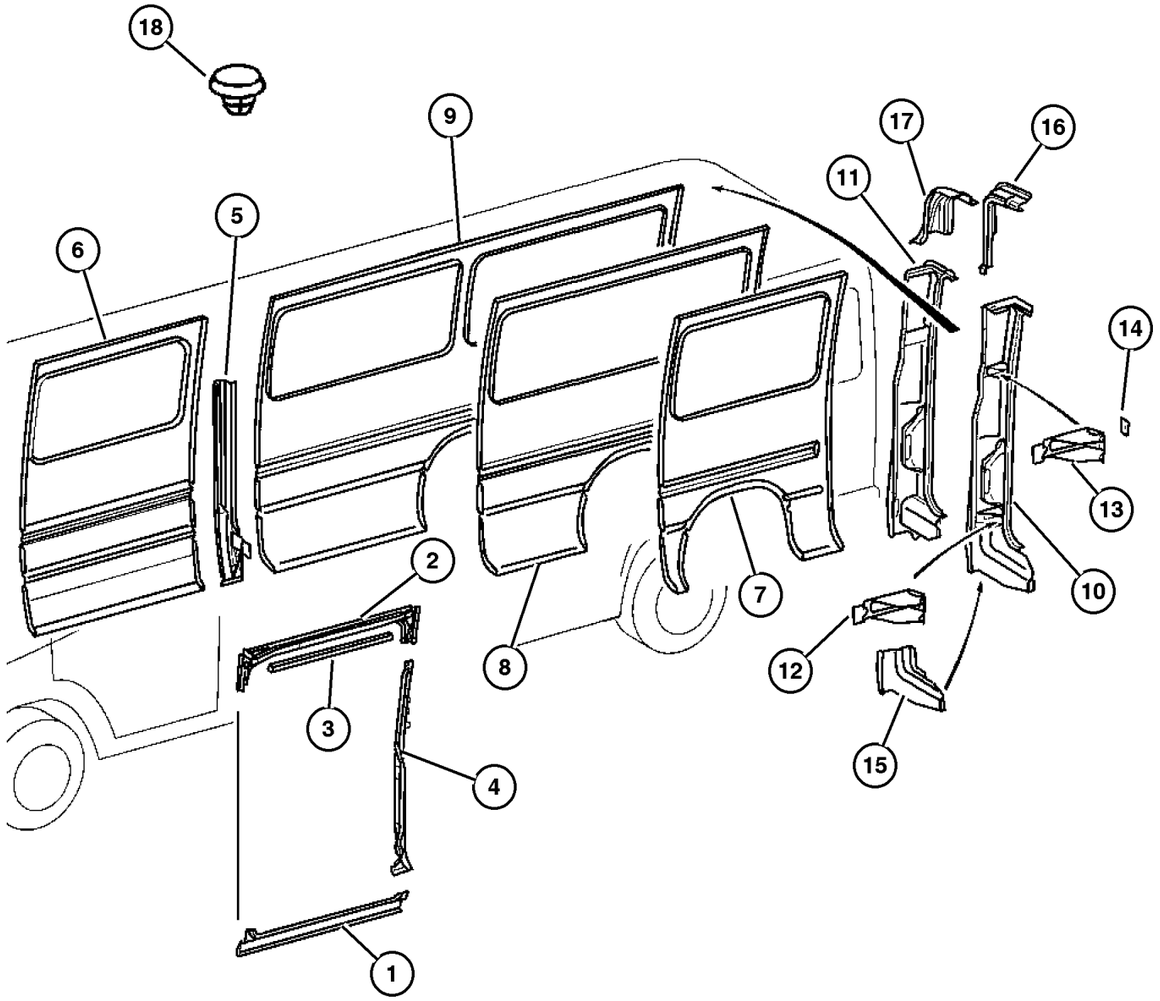

ITEM	PART NUMBER	QTY	LINE	SERIES	BODY	ENGINE	TRANS	TRIM	DESCRIPTION
		1	2, 6		51, 52, 54, 55, 56				
		1	3, 7		12, 15, 16				
7									PANEL, Body Side Rear
	5131 138AA	1	2, 6		11, 14				
		1	2, 6		51, 54				
8									PANEL, Body Side Rear
	5121 965AA	1	2, 6		12, 15				Without Windows
	5121 967AA	1	2, 6		12, 15				With Windows
		1	2, 6		52, 55				With Windows
	5121 993AA	1	3, 7		12, 15				
9									PANEL, Body Side Rear
	5104 225AA	1	2, 6		16				Without windows,without [R16] Wheels
	5121 970AA	1	2, 6		16				With Windows,Without [R16] Wheels
		1	2, 6		56				With Windows,Without [R16] Wheels
	5121 998AA	1	3, 7		16				
	5131 173AA	1	2, 6		16				Without Windows,With [R16], Wheels
	5131 178AA	1	2, 6		16				With Windows & [R16] Wheels
		1	2, 6		56				With Windows & [R16] Wheels
10									PANEL, D Pillar
	5104 176AA	1	2, 6		14, 15, 16				With High Roof
		1	2, 6		54, 55, 56				With High Roof
		1	3, 7		15, 16				With High Roof
	5121 679AA	1	2, 6		11, 12				With Low Roof
		1	2, 6		51, 52				With Low Roof
		1	3, 7		12				With Low Roof
11									PANEL, D Pillar
	5104 208AA	1	2, 6		11, 12				
		1	2, 6		51, 52				
		1	3, 7		12				
12									REINFORCEMENT, rear door hinge
	5104 209AA	1	2, 6		11, 12, 14, 15, 16				
		1	2, 6		51, 52, 54, 55, 56				

Refer to Model Legend Information Bookmark

AR = Use as required - = Non illustrated part # = New this model year

March 3, 2006

« RETURN TO GROUP INDEX

Right Side Panels, Cargo
Figure SVA-920

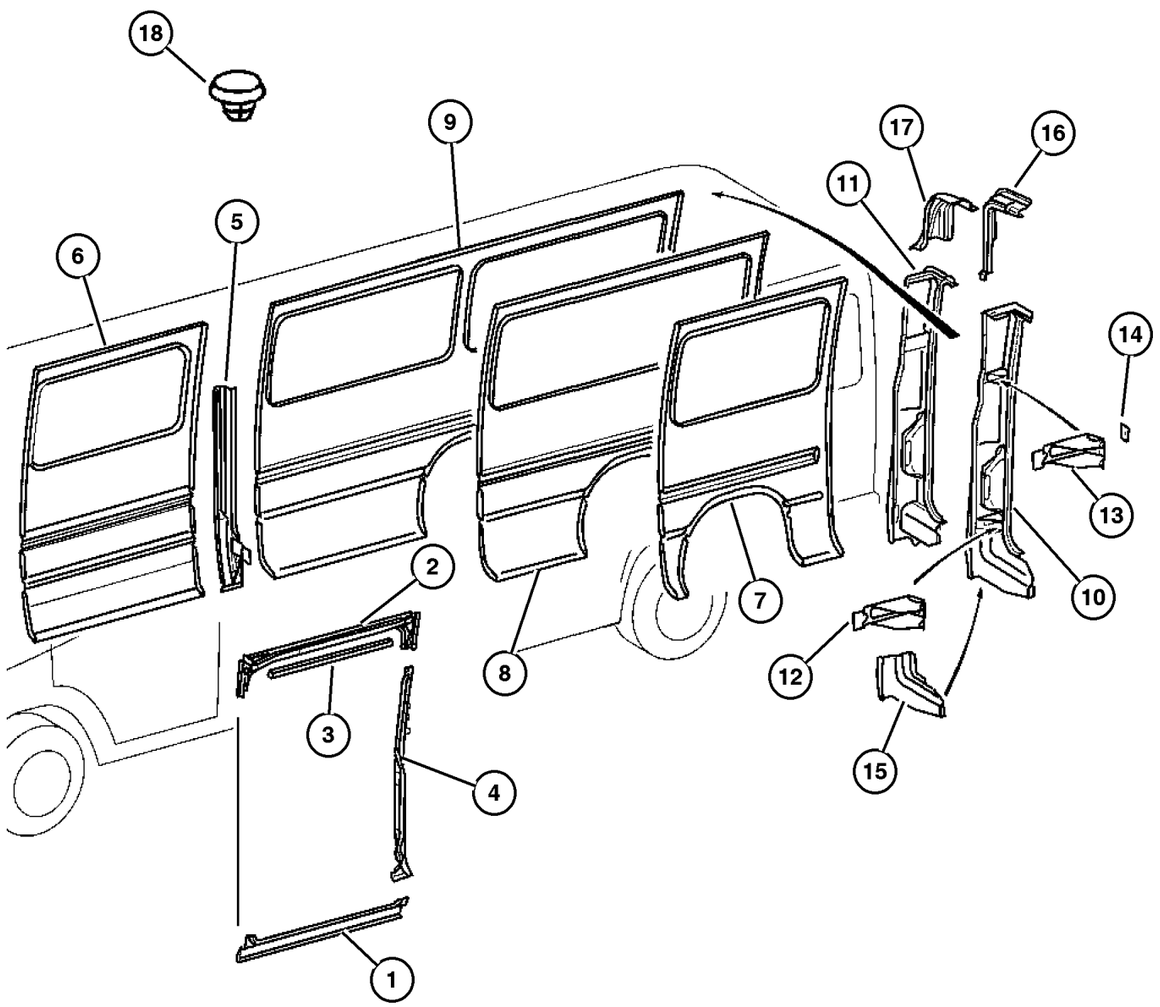

ITEM	PART NUMBER	QTY	LINE	SERIES	BODY	ENGINE	TRANS	TRIM	DESCRIPTION
		1	3, 7		12, 15, 16				
13									REINFORCEMENT, rear door hinge
	5104 215AA	1	2, 6		11, 12, 14, 15, 16				
		1	2, 6		51, 52, 54, 55, 56				
		1	3, 7		12, 15, 16				
14									PLATE, Rear Door Hinge
	5104 188AA	2	2, 6		11, 12, 14, 15, 16				
		2	2, 6		51, 52, 54, 55, 56				
		2	3, 7		12, 15, 16				
15									EXTENSION, D Pillar Lower
	5104 211AA	1	2, 6		11, 12, 14, 15, 16				
		1	2, 6		51, 52, 54, 55, 56				
		1	3, 7		12, 15, 16				
16									EXTENSION, D Pillar Upper
	5104 224AA	1	2, 6		14, 15, 16				
		1	2, 6		54, 55, 56				
		1	3, 7		15, 16				
17									PANEL, D Pillar Trim
	5104 218AA	1	2, 6		14, 15, 16				
		1	2, 6		54, 55, 56				
		1	3, 7		15, 16				
18									PLUG, Expansion
	5133 657AA	1	2, 6		11, 12, 14, 15, 16				

Refer to Model Legend Information Bookmark

AR = Use as required - = Non illustrated part # = New this model year

March 3, 2006

« RETURN TO GROUP INDEX

Right Side Panels, Cargo
Figure SVA-920

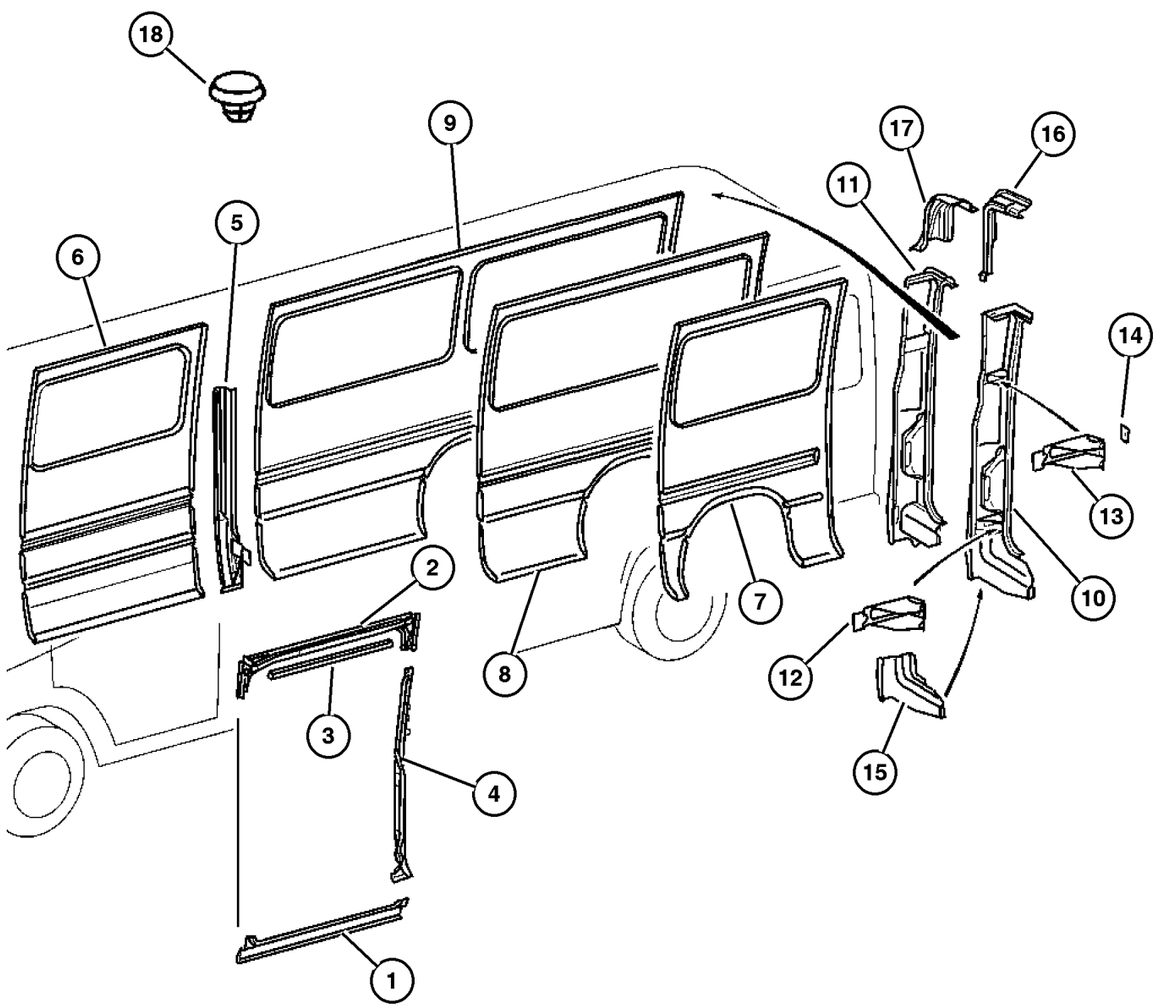

ITEM	PART NUMBER	QTY	LINE	SERIES	BODY	ENGINE	TRANS	TRIM	DESCRIPTION
		1	2, 6		51, 52, 54, 55, 56				
		1	3, 7		12, 15, 16				

Refer to Model Legend Information Bookmark

AR = Use as required - = Non illustrated part # = New this model year

March 3, 2006

« RETURN TO GROUP INDEX

«

Right Side Panels, Wagon
Figure SVA-930

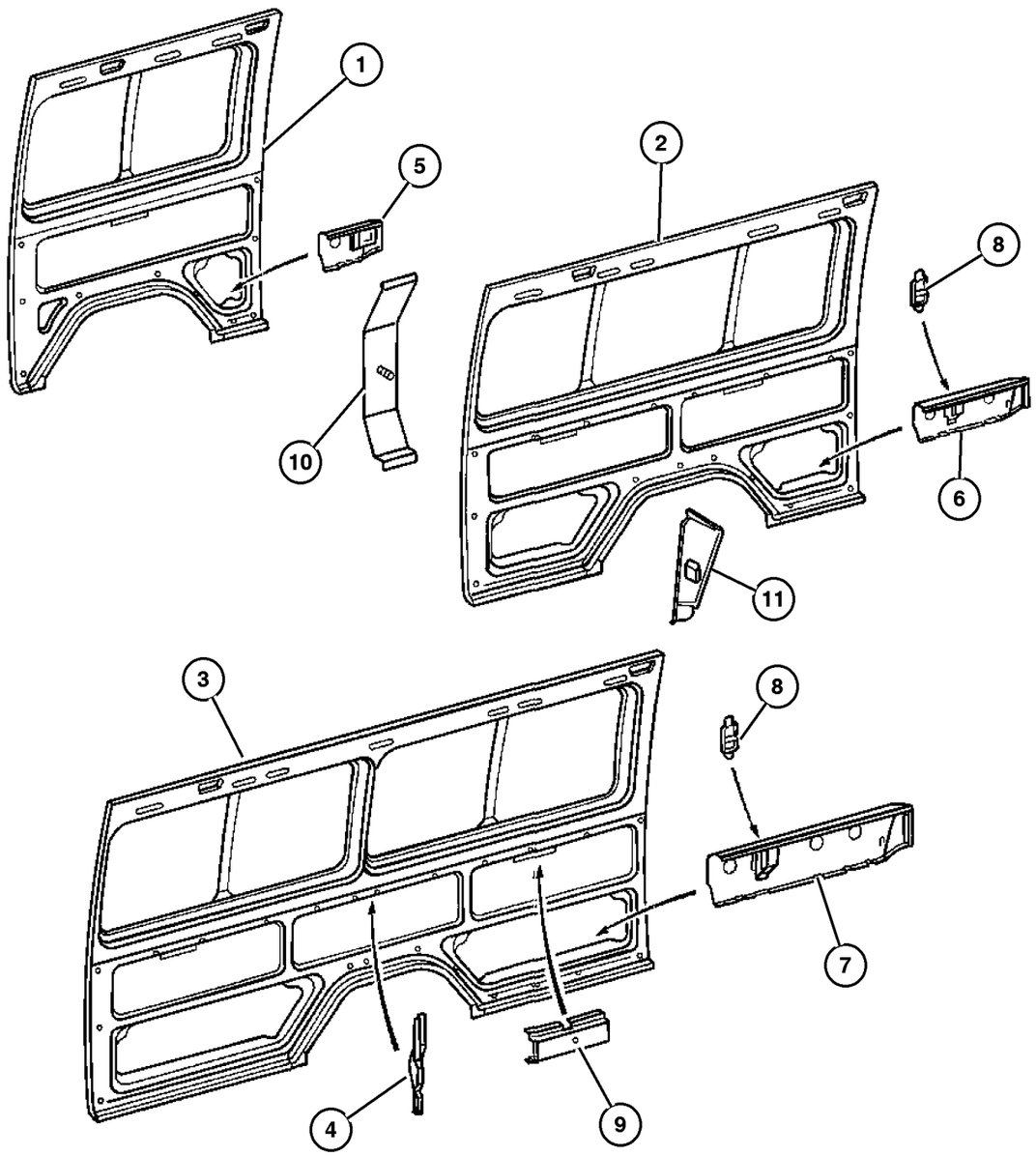

ITEM	PART NUMBER	QTY	LINE	SERIES	BODY	ENGINE	TRANS	TRIM	DESCRIPTION
1									PANEL, Body Side Rear, [118] Inch Wheelbase
	5121 897AA	1	2, 6		11, 14				With Sliding Door
		1	2, 6		51, 54				With Sliding Door
	5131 122AA	1	2, 6		11, 14				Without Sliding Door
		1	2, 6		51, 54				Without Sliding Door
2									PANEL, Body Side Rear, [140] Inch Wheelbase
	5121 892AA	1	2, 6		12, 15				Without Sliding Door
		1	2, 6		52, 55				Without Sliding Door
		1	3, 7		12, 15				Without Sliding Door
	5121 899AA	1	2, 6		12, 15				With Sliding Door
		1	2, 6		52, 55				With Sliding Door
		1	3, 7		12, 15				With Sliding Door
3									PANEL, Body Side Rear, [158] Inch Wheelbase
	5104 203AA	1	2, 6		16				With Sliding Door
		1	2, 6		56				With Sliding Door
		1	3, 7		16				With Sliding Door
	5121 895AA	1	2, 6		16				Without sliding Door
		1	2, 6		56				Without sliding Door
		1	3, 7		16				Without sliding Door
4									REINFORCEMENT, Quarter Inner
	5121 707AA	1	2, 6		11, 12, 14, 15, 16				With 16x6 Steel Wheels
		1	2, 6		51, 52, 54, 55, 56				With 16x6 Steel Wheels
		1	3, 7		12, 15, 16				With 16x6 Steel Wheels
	5131 056AA	1	2, 6		11, 12, 14, 15, 16				
		1	2, 6		51, 52, 54, 55, 56				
5									SUPPORT
	5121 739AA	1	2, 6		11, 14				
		1	2, 6		51, 54				
6									SUPPORT, Sill Reinforcement
	5121 743AA	1	2, 6		12, 15				
		1	2, 6		52, 55				
		1	3, 7		12, 15				
7									SUPPORT, Sill Reinforcement

Refer to Model Legend Information Bookmark

AR = Use as required - = Non illustrated part # = New this model year

March 3, 2006

« RETURN TO GROUP INDEX

»

Right Side Panels, Wagon
Figure SVA-930

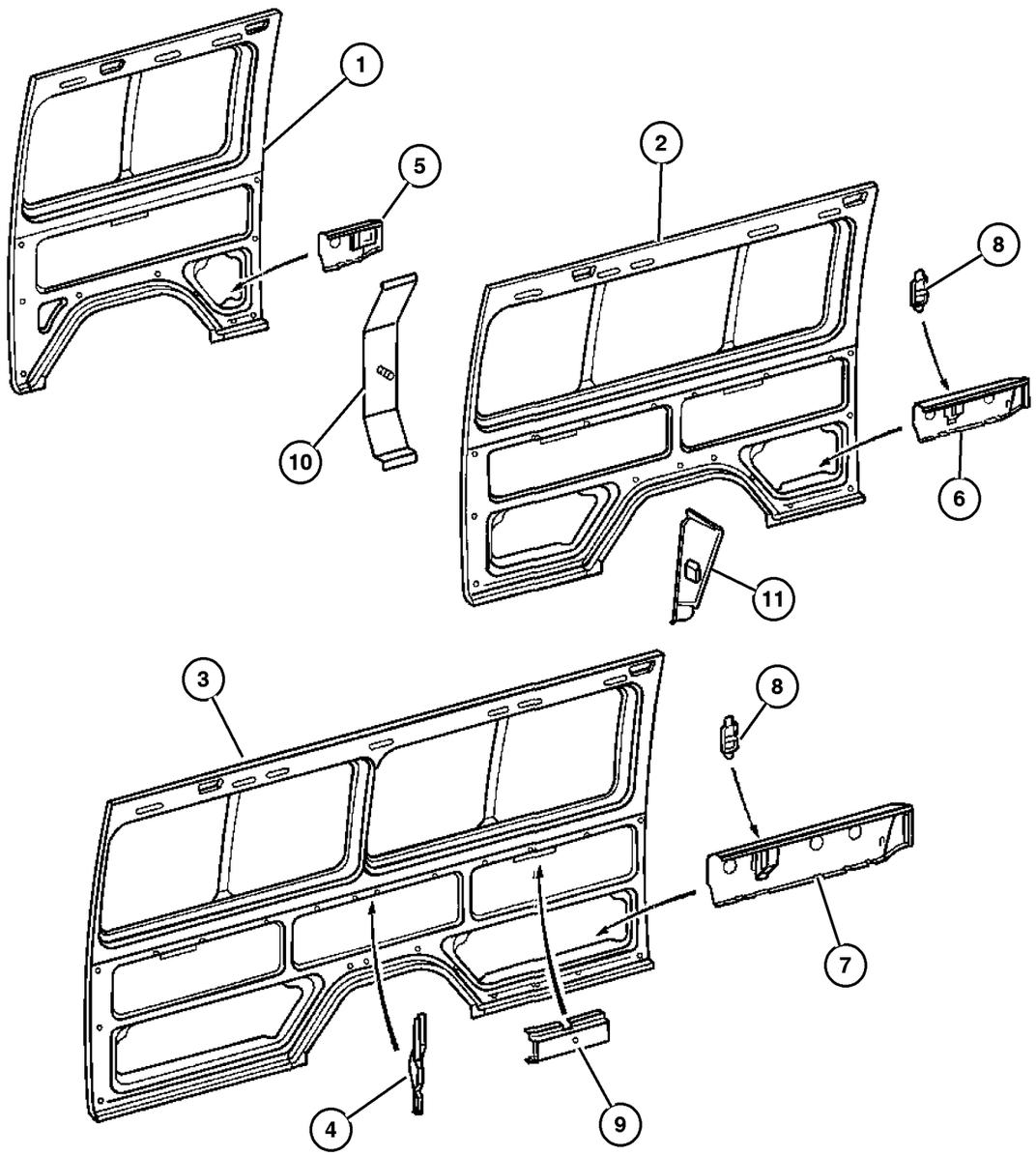

ITEM	PART NUMBER	QTY	LINE	SERIES	BODY	ENGINE	TRANS	TRIM	DESCRIPTION
	5121 747AA	1	2, 6		16				
		1	2, 6		56				
		1	3, 7		16				
8									PLUG, Body
	5125 519AA	2	2, 6		12, 15				
		1	2, 6		11, 14				
		1	2, 6		51, 54				
		3	2, 6		52, 55				
		1	3, 7		12, 15,				
					16				
9									REINFORCEMENT, Side Panel
	5131 057AA	2	2, 6		11, 12,				
					14, 15,				
					16				
		1	2, 6		51, 52,				
					54, 55,				
					56				
10									BRACKET
	5127 239AA	3	2, 6		11, 14,				
					16				
		3	2, 6		51, 54,				
					56				
		5	3, 7		12, 15				
		7	3, 7		16				
11									PANEL, Rear Side
	5129 938AA	2	2, 6		11, 12,				
					14, 15,				
					16				
		2	2, 6		51, 52,				
					54, 55,				
					56				

Refer to Model Legend Information Bookmark

AR = Use as required - = Non illustrated part # = New this model year

March 3, 2006

« RETURN TO GROUP INDEX

Left Side Cargo Door Pillars & Wheelhouse
Figure SVA-940

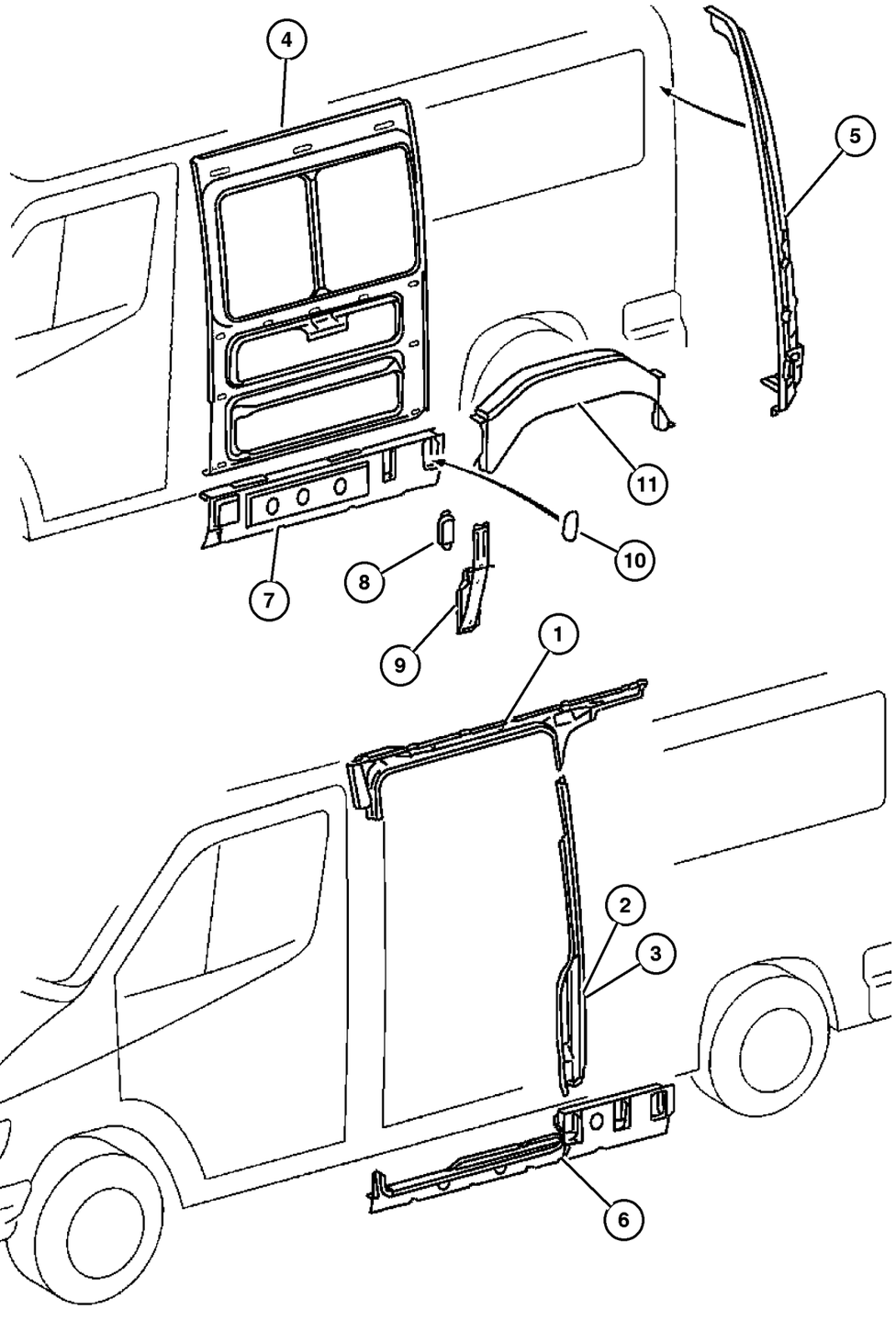

ITEM	PART NUMBER	QTY	LINE	SERIES	BODY	ENGINE	TRANS	TRIM	DESCRIPTION
1									REINFORCEMENT, Body Side Aperture
	5121 903AA	1	2, 6		11, 12, 14, 15, 16				
		1	2, 6		51, 52, 54, 55, 56				
		1	3, 7		12, 15, 16				
2									PILLAR, Side Cargo Door
	5121 914AA	1	2, 6		11, 12, 14, 15, 16				
		1	2, 6		51, 52, 54, 55, 56				
		1	3, 7		12, 15, 16				
3									REINFORCEMENT, Quarter Inner
	5121 706AA	1	2, 6		11, 12, 14, 15, 16				
		1	2, 6		51, 52, 54, 55, 56				
		1	3, 7		12, 15, 16				
4									PANEL, Body Side Front
	5104 197AA	1	2, 6		11, 12, 14, 15, 16				
		1	2, 6		51, 52, 54, 55, 56				
		1	3, 7		12, 15, 16				
5									PILLAR, Rear Cargo Door Hinge
	5104 177AA	1	2, 6		14, 15, 16				With High Roof
		1	2, 6		54, 55, 56				With High Roof
		1	3, 7		15, 16				With High Roof
	5121 906AA	1	2, 6		11, 12				With Low Roof
		1	2, 6		51, 52				With Low Roof

Refer to Model Legend Information Bookmark

AR = Use as required - = Non illustrated part # = New this model year

March 3, 2006

« RETURN TO GROUP INDEX

»

Left Side Cargo Door Pillars & Wheelhouse
Figure SVA-940

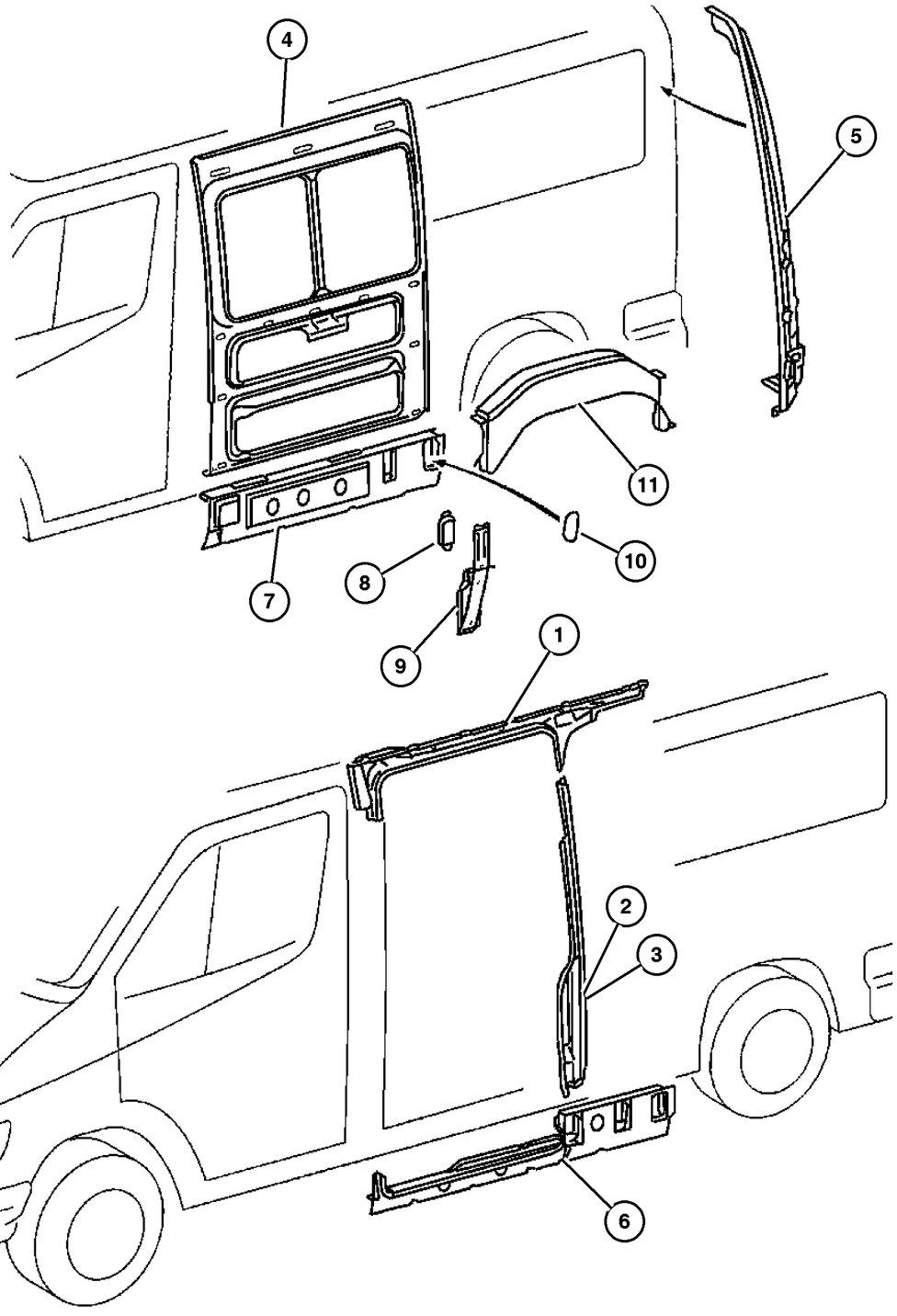

ITEM	PART NUMBER	QTY	LINE	SERIES	BODY	ENGINE	TRANS	TRIM	DESCRIPTION
		1	3, 7		12				With Low Roof
6									SUPPORT, Sill Reinforcement
	5121 749AA	1	2, 6		11, 14				With 118 Inch Wheelbase
		1	2, 6		51, 54				With 118 Inch Wheelbase
	5121 751AA	1	2, 6		12, 15				With 140 Inch Wheelbase
		1	2, 6		52, 55				With 140 Inch Wheelbase
	5121 754AA	1	2, 6		16				With 158 Inch Wheelbase
		1	2, 6		56				With 158 Inch Wheelbase
	5121 774AA	1	3, 7		12, 15				With 140 Inch Wheelbase
	5121 778AA	1	3, 7		16				With 158 Inch Wheelbase
7									SUPPORT, Sill Reinforcement
	5104 175AA	1	2, 6		16				With 158 Inch Wheelbase
		1	2, 6		56				With 158 Inch Wheelbase
	5121 759AA	1	2, 6		11, 14				With 118 Inch Wheelbase
		1	2, 6		51, 54				With 118 Inch Wheelbase
	5121 761AA	1	2, 6		12, 15				With 140 Inch Wheelbase
		1	2, 6		52, 55				With 140 Inch Wheelbase
	5121 764AA	1	3, 7		12, 15				With 140 Inch Wheelbase
	5121 769AA	1	3, 7		16				With 158 Inch Wheelbase
8									PLUG, Body
	5125 519AA	2	2, 6		12, 15				
		1	2, 6		11, 14				
		1	2, 6		51, 54				
		3	2, 6		52, 55				
		1	3, 7		12, 15, 16				
9									REINFORCEMENT, Side Panel
	5104 198AA	1	2, 6		12, 15				
		1	2, 6		52, 55				
		1	3, 7		12, 15, 16				
10									COVER, Sill
	5121 838AA	1	2, 6		11, 12, 14, 15, 16				
		1	2, 6		51, 52, 54, 55, 56				
		1	3, 7		12, 15, 16				
11									WHEELHOUSE
	5121 862AA	1	2, 6		11, 12, 14, 15, 16				

Refer to Model Legend Information Bookmark

AR = Use as required - = Non illustrated part # = New this model year

March 3, 2006

Left Side Cargo Door Pillars & Wheelhouse
Figure SVA-940

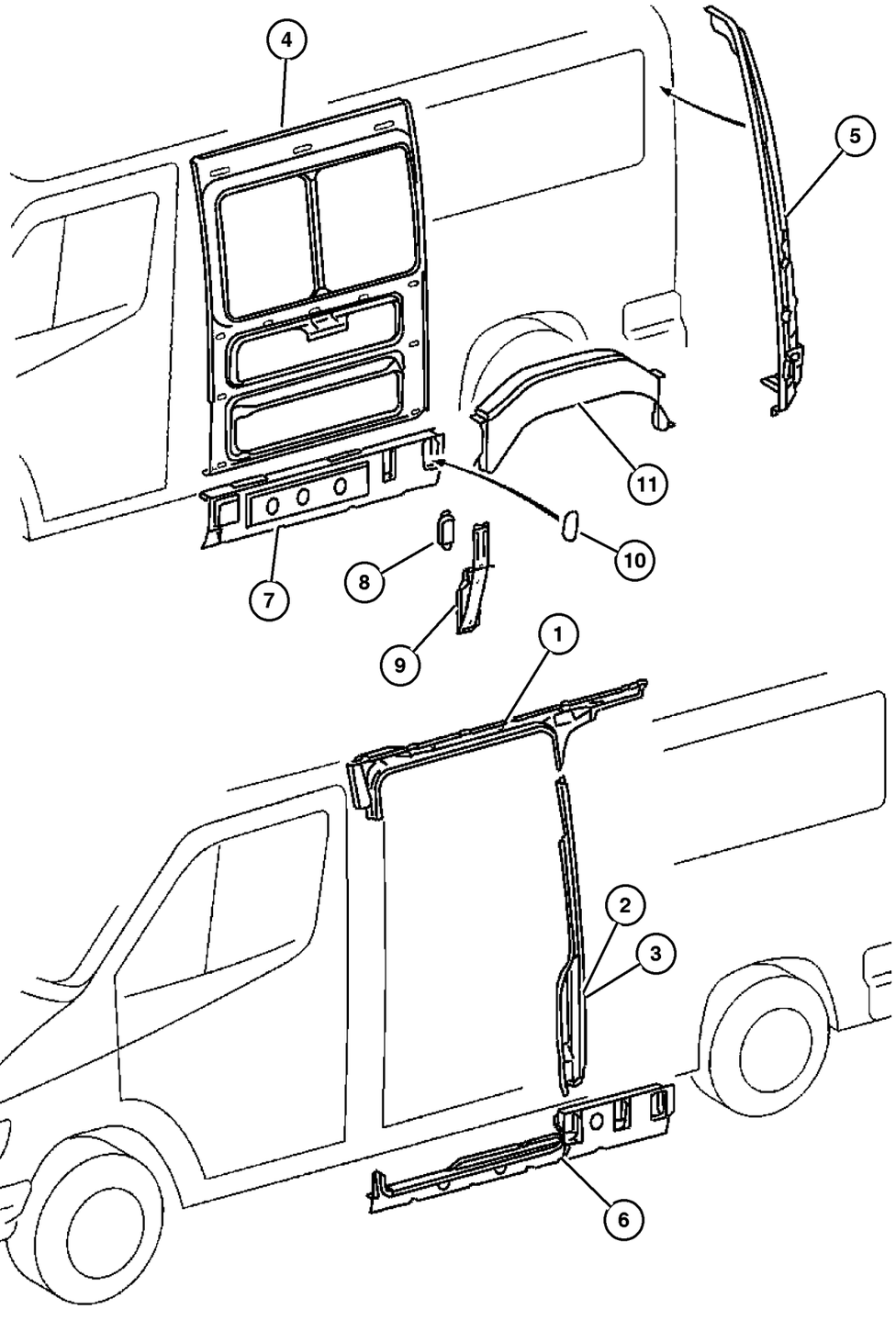

ITEM	PART NUMBER	QTY	LINE	SERIES	BODY	ENGINE	TRANS	TRIM	DESCRIPTION
		1	2, 6		51, 52, 54, 55, 56				
	5121 865AA	1	3, 7		12, 15, 16				

Refer to Model Legend Information Bookmark

AR = Use as required - = Non illustrated part # = New this model year

March 3, 2006

« RETURN TO GROUP INDEX

«

Left Side Panels, Cargo
Figure SVA-950

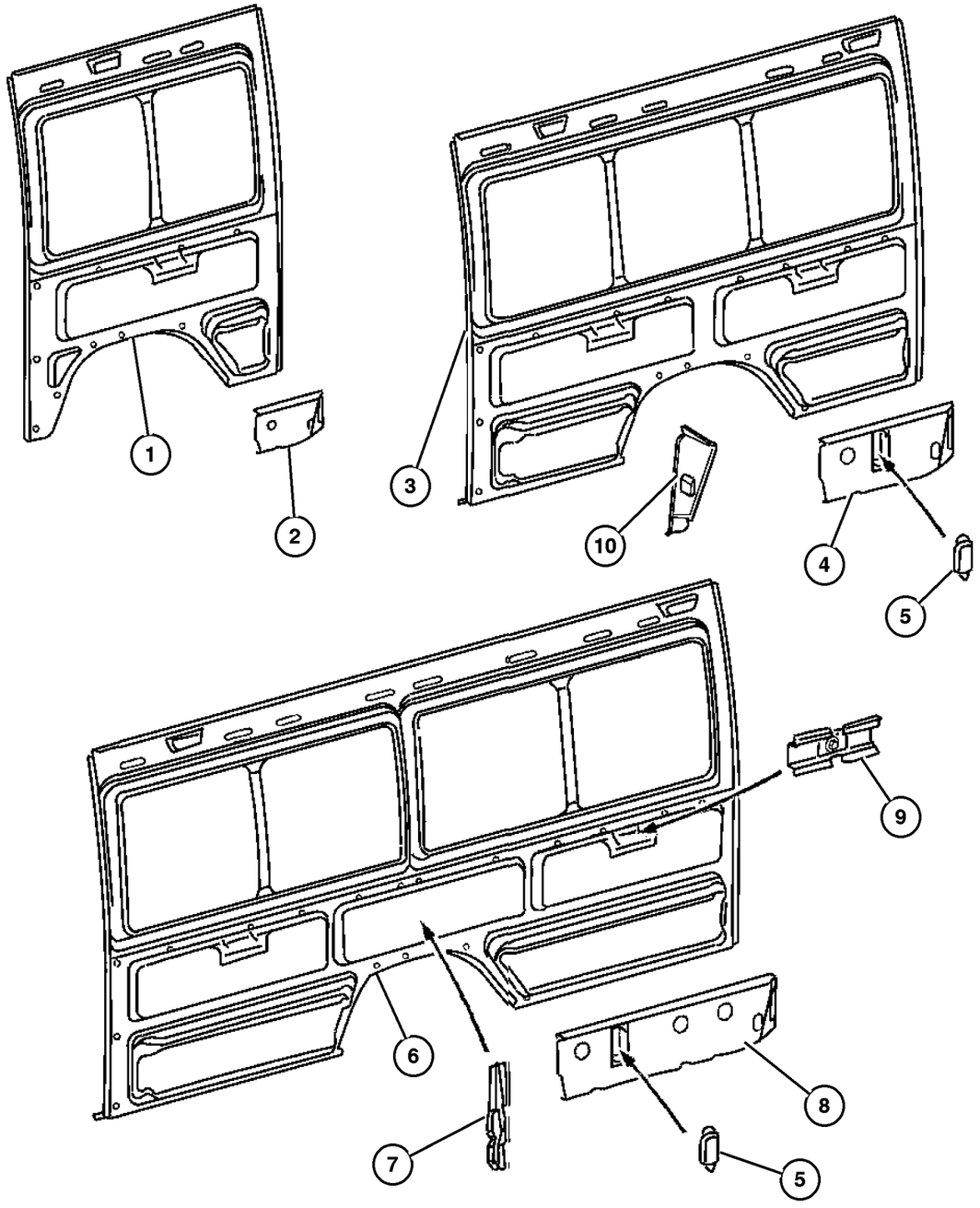

ITEM	PART NUMBER	QTY	LINE	SERIES	BODY	ENGINE	TRANS	TRIM	DESCRIPTION
1									PANEL, Body Side Rear, With 118 Inch Wheelbase
	5121 888AA	1	2, 6		11, 14				
		1	2, 6		51, 54				
2									SUPPORT, With 118 Inch Wheelbase
	5121 737AA	1	2, 6		11, 14				
		1	2, 6		51, 54				
3									PANEL, Body Side Rear, With 140 Inch Wheelbase
	5121 890AA	1	2, 6		12, 15				
		1	2, 6		52, 55				
		1	3, 7		12, 15				
4									SUPPORT, With 140 & 158 Inch Wheelbase
	5121 741AA	1	2, 6		12, 15				
		1	2, 6		52, 55				
		1	3, 7		12, 15				
5									PLUG, Body, With 140 Inch Wheelbase
	5125 519AA	1	2, 6		11, 14				
		3	2, 6		12, 15				
		1	2, 6		51, 54				
		3	2, 6		52, 55				
		1	3, 7		12, 15, 16				
6									PANEL, Body Side Rear, With 158 Inch Wheelbase
	5104 202AA	1	2, 6		16				
		1	2, 6		56				
		1	3, 7		16				
7									REINFORCEMENT, Quarter Inner, With 158 Inch Wheelbase
	5121 799AA	1	2, 6		11, 12, 14, 15, 16				
		1	2, 6		51, 52, 54, 55, 56				
		1	3, 7		12, 15, 16				
8									SUPPORT, With 158 Inch Wheelbase
	5121 745AA	1	2, 6		16				
		1	2, 6		56				

Refer to Model Legend Information Bookmark

AR = Use as required - = Non illustrated part # = New this model year

March 3, 2006

« RETURN TO GROUP INDEX

»

Left Side Panels, Cargo
Figure SVA-950

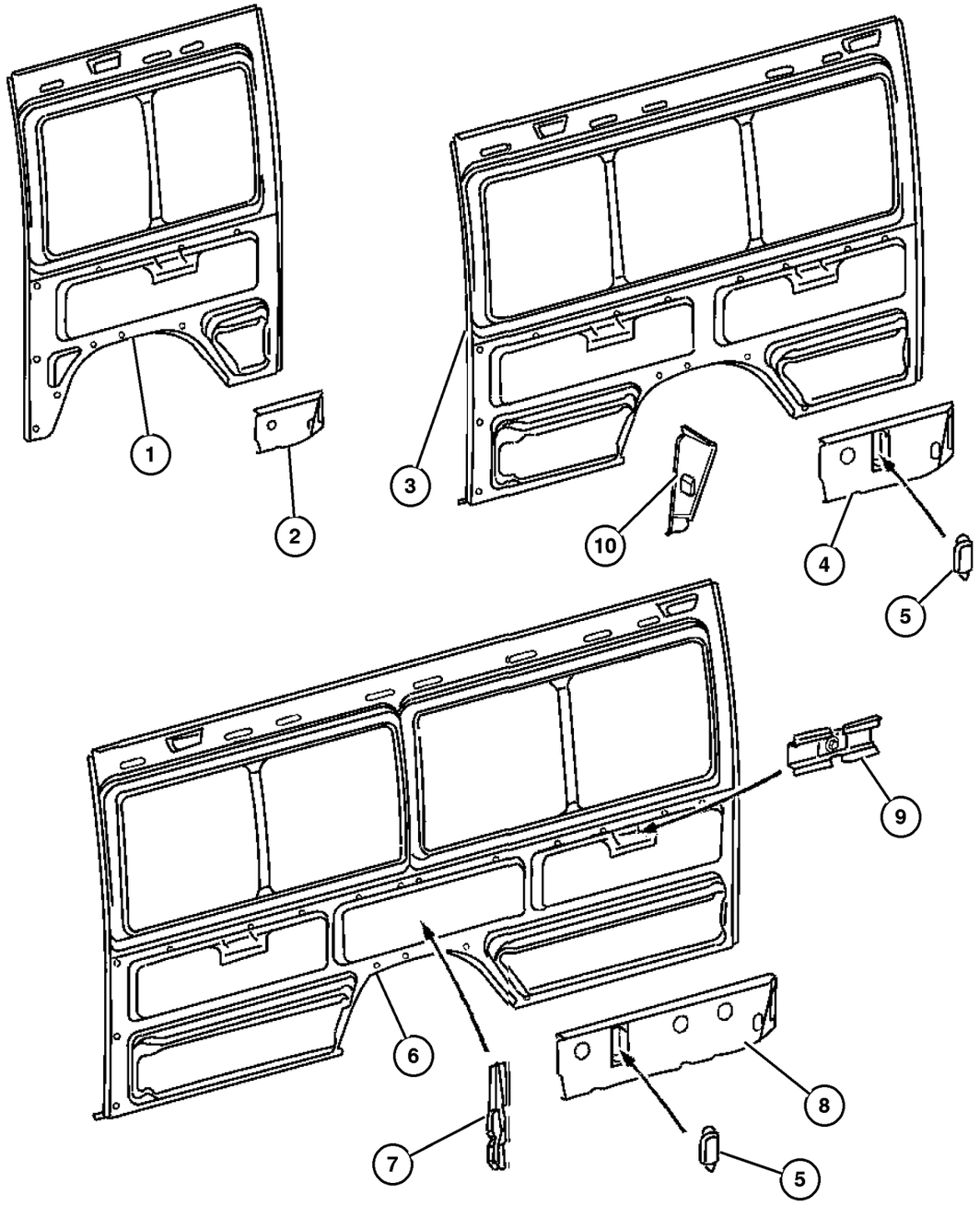

ITEM	PART NUMBER	QTY	LINE	SERIES	BODY	ENGINE	TRANS	TRIM	DESCRIPTION
		1	3, 7		16				
9									REINFORCEMENT, Side Panel, With 158 Inch Wheelbase
	5131 057AA	2	2, 6		11, 12, 14, 15, 16				
		1	2, 6		51, 52, 54, 55, 56				
10									PANEL, Rear Side
	5129 937AA	2	2, 6		11, 12, 14, 15, 16				
		2	2, 6		51, 52, 54, 55, 56				

Refer to Model Legend Information Bookmark

AR = Use as required - = Non illustrated part # = New this model year

March 3, 2006

« RETURN TO GROUP INDEX

Left Side Panels, Wagon
Figure SVA-960

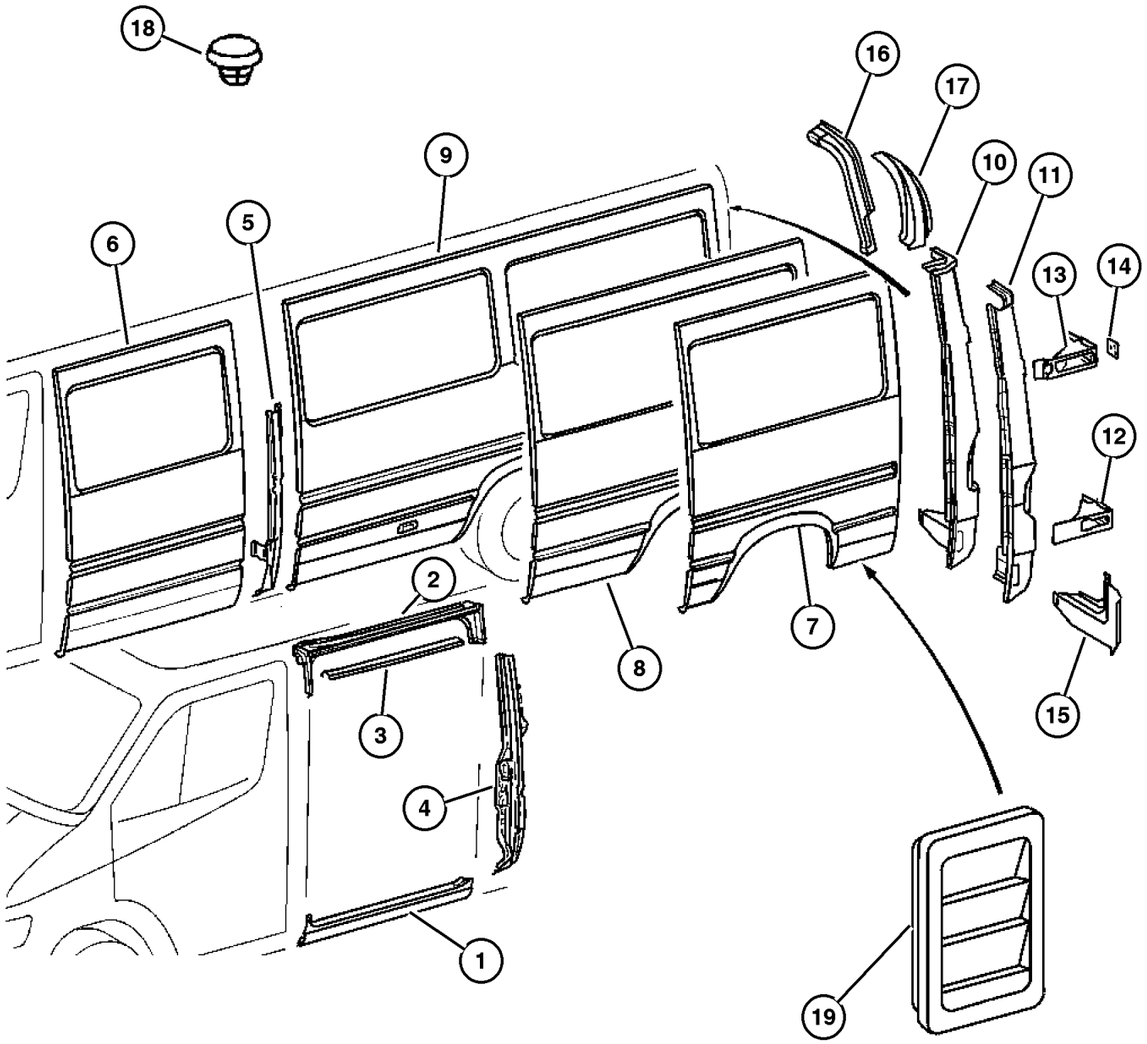

ITEM	PART NUMBER	QTY	LINE	SERIES	BODY	ENGINE	TRANS	TRIM	DESCRIPTION
1									PANEL, Sill
	5121 937AA	1	2, 6		11, 12, 14, 15, 16				
		1	2, 6		51, 52, 54, 55, 56				
		1	3, 7		12, 15, 16				
2									PANEL, Cargo Compartment, Upper
	5121 682AA	1	2, 6		11, 12, 14, 15, 16				
		1	2, 6		51, 52, 54, 55, 56				
		1	3, 7		12, 15, 16				
3									TRACK, Sliding Door
	5122 035AA	1	2, 6		11, 12, 14, 15, 16				
		1	2, 6		51, 52, 54, 55, 56				
		1	3, 7		12, 15, 16				
4									PILLAR, Side Cargo Door
	5121 696AA	1	2, 6		12, 15				With 140 & 150 Inch Wheelbase
		1	2, 6		52, 55				With 140 & 150 Inch Wheelbase
		1	3, 7		12, 15				With 140 & 150 Inch Wheelbase
	5131 051AA	1	2, 6		51, 54				With 118 Inch Wheelbase
	5131 053AA	1	2, 6		11, 14				With 118 Inch Wheelbase
5									PILLAR, Side Cargo Door
	5104 168AA	1	2, 6		11, 14				With 118 Inch Wheelbase
		1	2, 6		51, 54				With 118 Inch Wheelbase
	5104 170AA	1	2, 6		12, 15				With 140 & 158 Inch Wheelbase
		1	2, 6		52, 55				With 140 & 158 Inch Wheelbase
		1	3, 7		12, 15				With 140 & 158 Inch Wheelbase
6									PANEL, Body Side Front
	5104 205AA	1	2, 6		11, 12, 14, 15, 16				

Refer to Model Legend Information Bookmark

AR = Use as required - = Non illustrated part # = New this model year

March 3, 2006

« RETURN TO GROUP INDEX

»

Left Side Panels, Wagon
Figure SVA-960

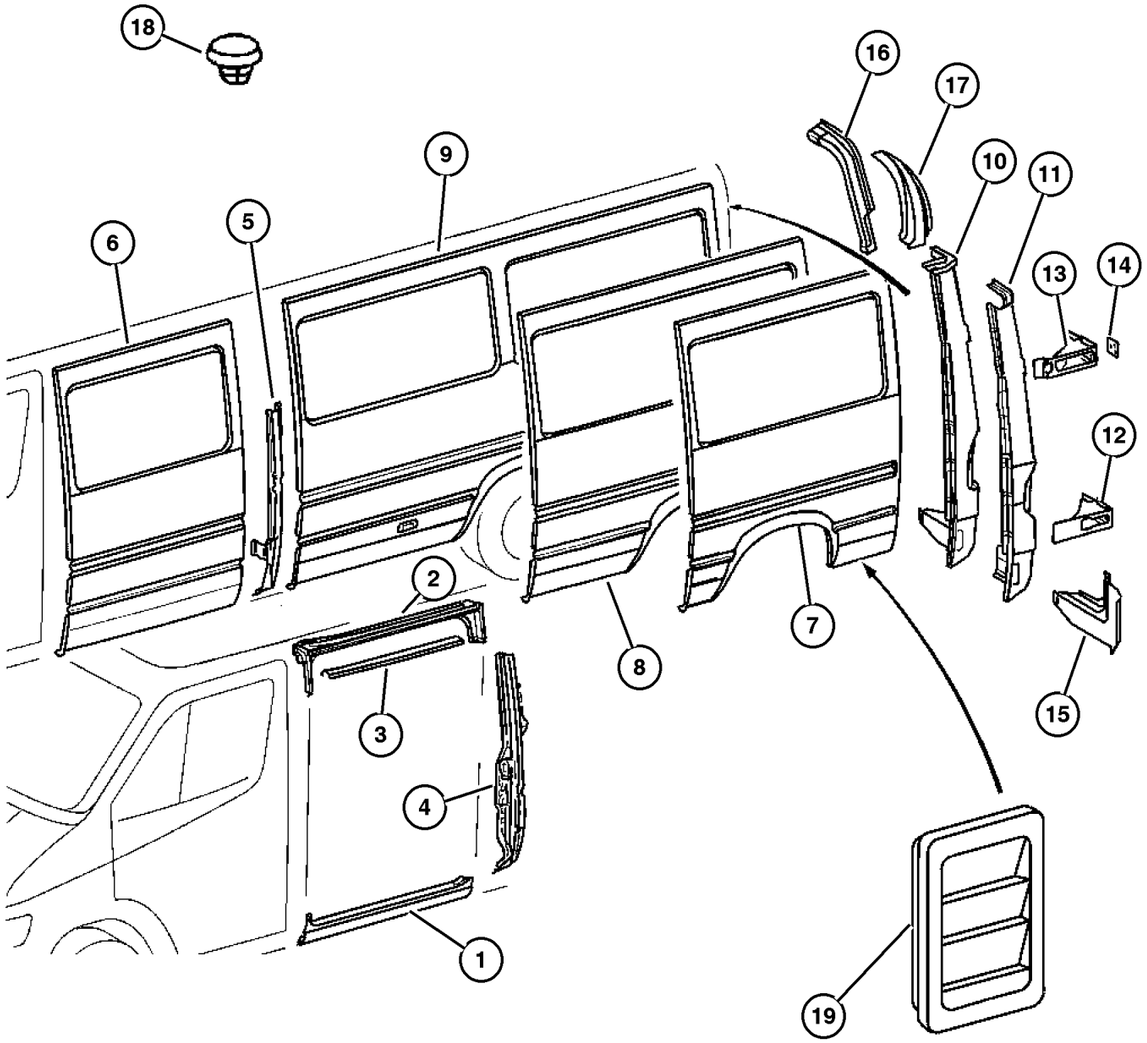

ITEM	PART NUMBER	QTY	LINE	SERIES	BODY	ENGINE	TRANS	TRIM	DESCRIPTION
		1	2, 6		51, 52, 54, 55, 56				
		1	3, 7		12, 15, 16				
7									PANEL, Body Side Rear, With 118 Inch Wheelbase
	5104 212AA	1	2, 6		11, 14				
		1	2, 6		51, 54				
8									PANEL, Body Side Rear, With 140 Inch Wheelbase
	5121 941AA	1	2, 6		12, 15				
	5121 948AA	1	2, 6		52, 55				
	5121 990AA	1	3, 7		12, 15				
	5131 158AA	1	2, 6		12, 15				With 16x6 steel Wheels
	5131 164AA	1	2, 6		52, 55				With 16x6 steel Wheels
9									PANEL, Body Side Rear, With 158 Inch Wheelbase
	5104 219AA	1	2, 6		16				
		1	2, 6		56				
	5121 995AA	1	3, 7		16				
	5131 170AA	1	2, 6		16				With 16x6 Steel Wheels
	5131 176AA	1	2, 6		56				With 16x6 Steel Wheels
10									PANEL, D Pillar
	5104 172AA	1	2, 6		11, 12				Low Roof
		1	2, 6		51, 52				Low Roof
		1	3, 7		12				Low Roof
	5104 174AA	1	2, 6		14, 15, 16				High Roof
		1	2, 6		54, 55, 56				High Roof
		1	3, 7		15, 16				High Roof
11									PANEL, D Pillar
	5104 206AA	1	2, 6		11, 12				
		1	2, 6		51, 52				
		1	3, 7		12				
12									REINFORCEMENT, rear door hinge
	5122 031AA	1	2, 6		11, 12, 14, 15, 16				
		1	2, 6		51, 52, 54, 55, 56				
		1	3, 7		12, 15, 16				
13									REINFORCEMENT, rear door hinge

Refer to Model Legend Information Bookmark

AR = Use as required - = Non illustrated part # = New this model year

March 3, 2006

Left Side Panels, Wagon
Figure SVA-960

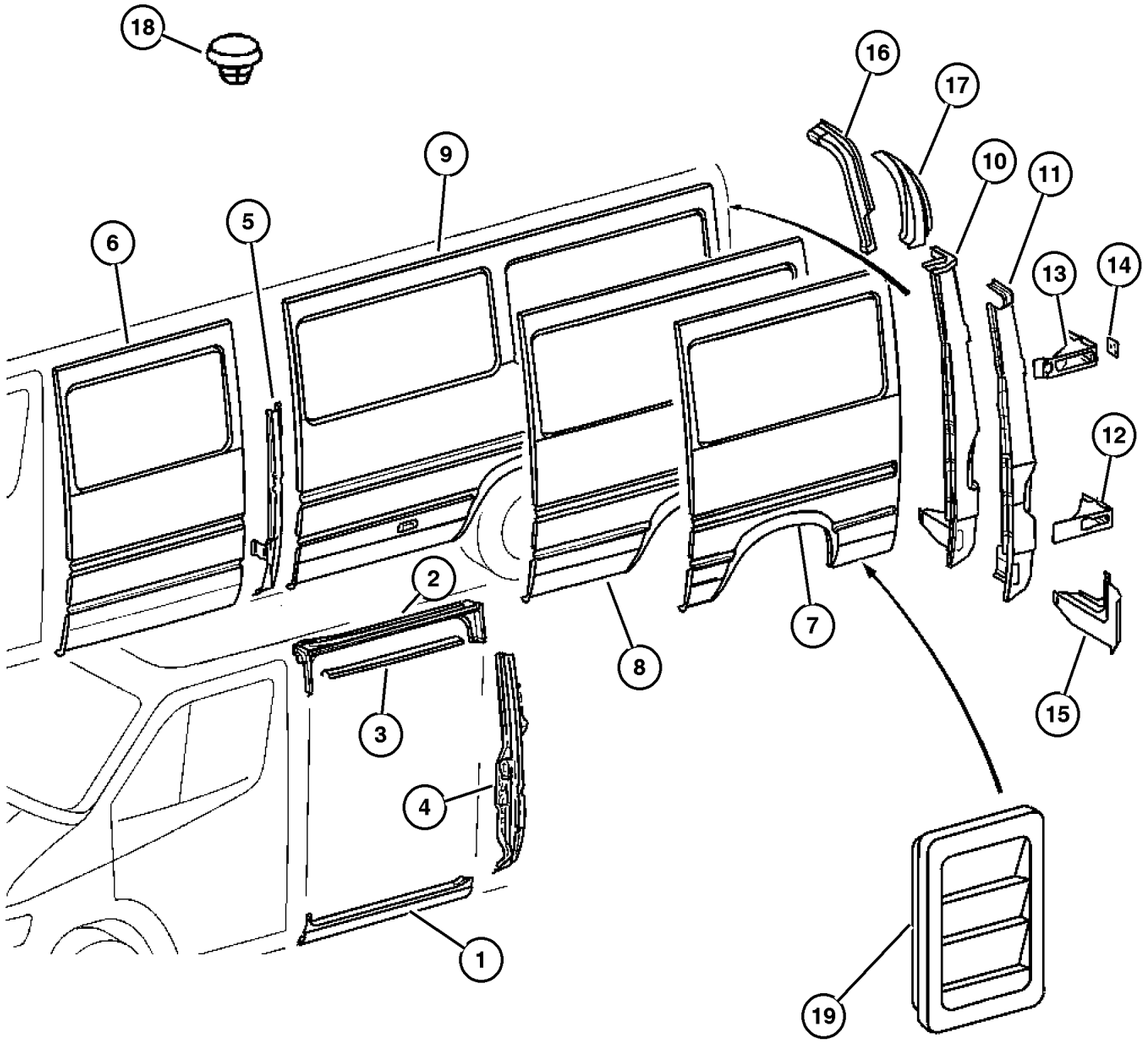

ITEM	PART NUMBER	QTY	LINE	SERIES	BODY	ENGINE	TRANS	TRIM	DESCRIPTION
	5122 032AA	1	2, 6		11, 12, 14, 15, 16				
		1	2, 6		51, 52, 54, 55, 56				
		1	3, 7		12, 15, 16				
14									PLATE, Rear Door Hinge
	5104 188AA	2	2, 6		11, 12, 14, 15, 16				
		2	2, 6		51, 52, 54, 55, 56				
		2	3, 7		12, 15, 16				
15									EXTENSION, D Pillar Lower
	5104 207AA	1	2, 6		11, 12, 14, 15, 16				
		1	2, 6		51, 52, 54, 55, 56				
		1	3, 7		12, 15, 16				
16									EXTENSION, D Pillar Upper
	5121 988AA	1	2, 6		14, 15, 16				
		1	2, 6		54, 55, 56				
		1	3, 7		15, 16				
17									PANEL, D Pillar Trim
	5122 050AA	1	2, 6		14, 15, 16				
		1	2, 6		54, 55, 56				
		1	3, 7		15, 16				
18									PLUG, Expansion
	5133 657AA	1	2, 6		11, 12, 14, 15, 16				
		1	2, 6		51, 52, 54, 55, 56				

Refer to Model Legend Information Bookmark

AR = Use as required - = Non illustrated part # = New this model year

March 3, 2006

« RETURN TO GROUP INDEX

Left Side Panels, Wagon
Figure SVA-960

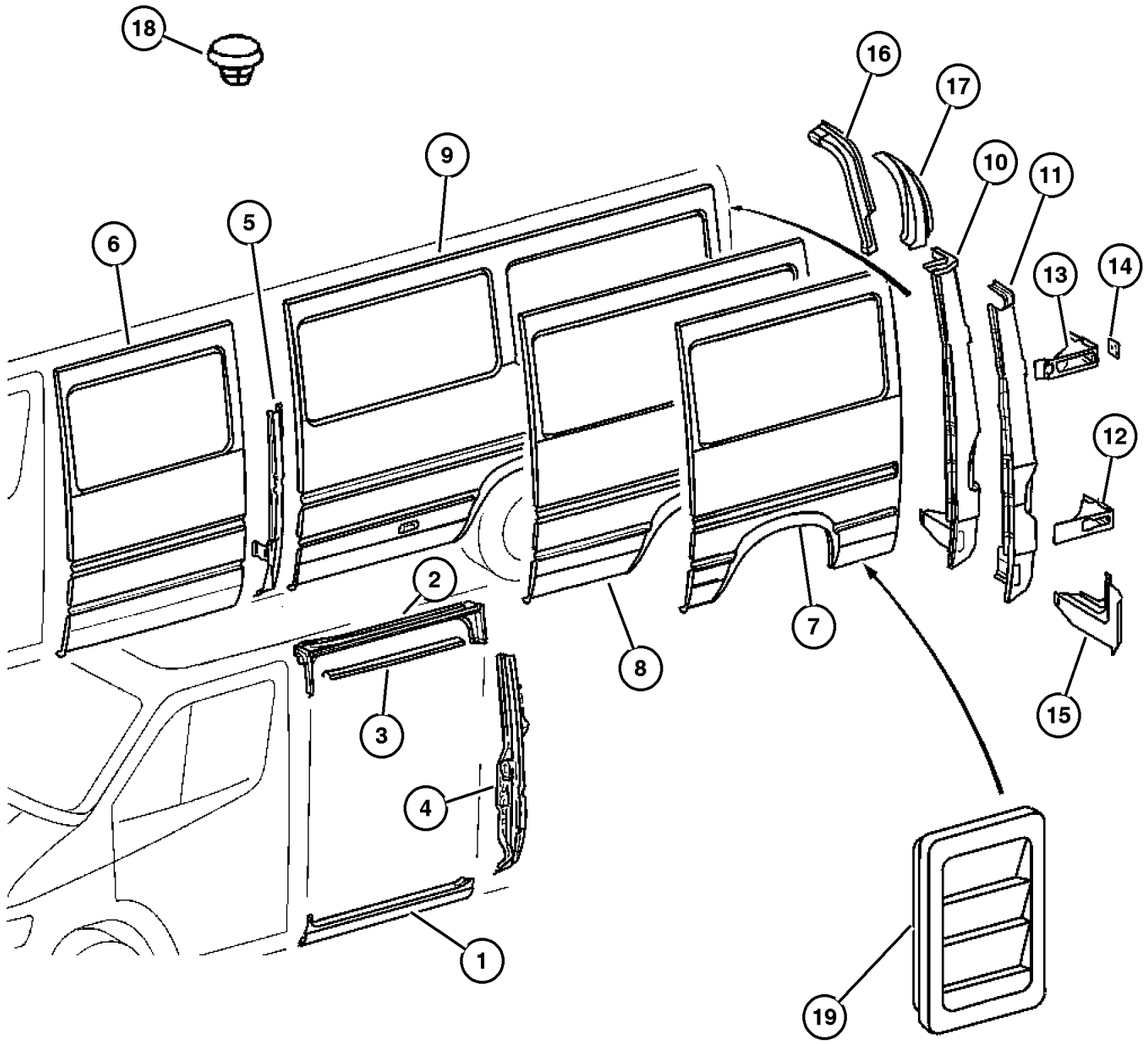

ITEM	PART NUMBER	QTY	LINE	SERIES	BODY	ENGINE	TRANS	TRIM	DESCRIPTION
		1	3, 7		12, 15, 16				
19	5104 472AA	2	2, 6		01, 02, 06				EXHAUSTER, Quarter Panel
		2	2, 6		11, 12, 14, 15, 16				
		2	2, 6		51, 52, 54, 55, 56				
		2	3, 7		02, 06				
		2	3, 7		12, 15, 16				

Refer to Model Legend Information Bookmark

AR = Use as required - = Non illustrated part # = New this model year

March 3, 2006

« RETURN TO GROUP INDEX

Rear Splash Shield
Figure SVA-970

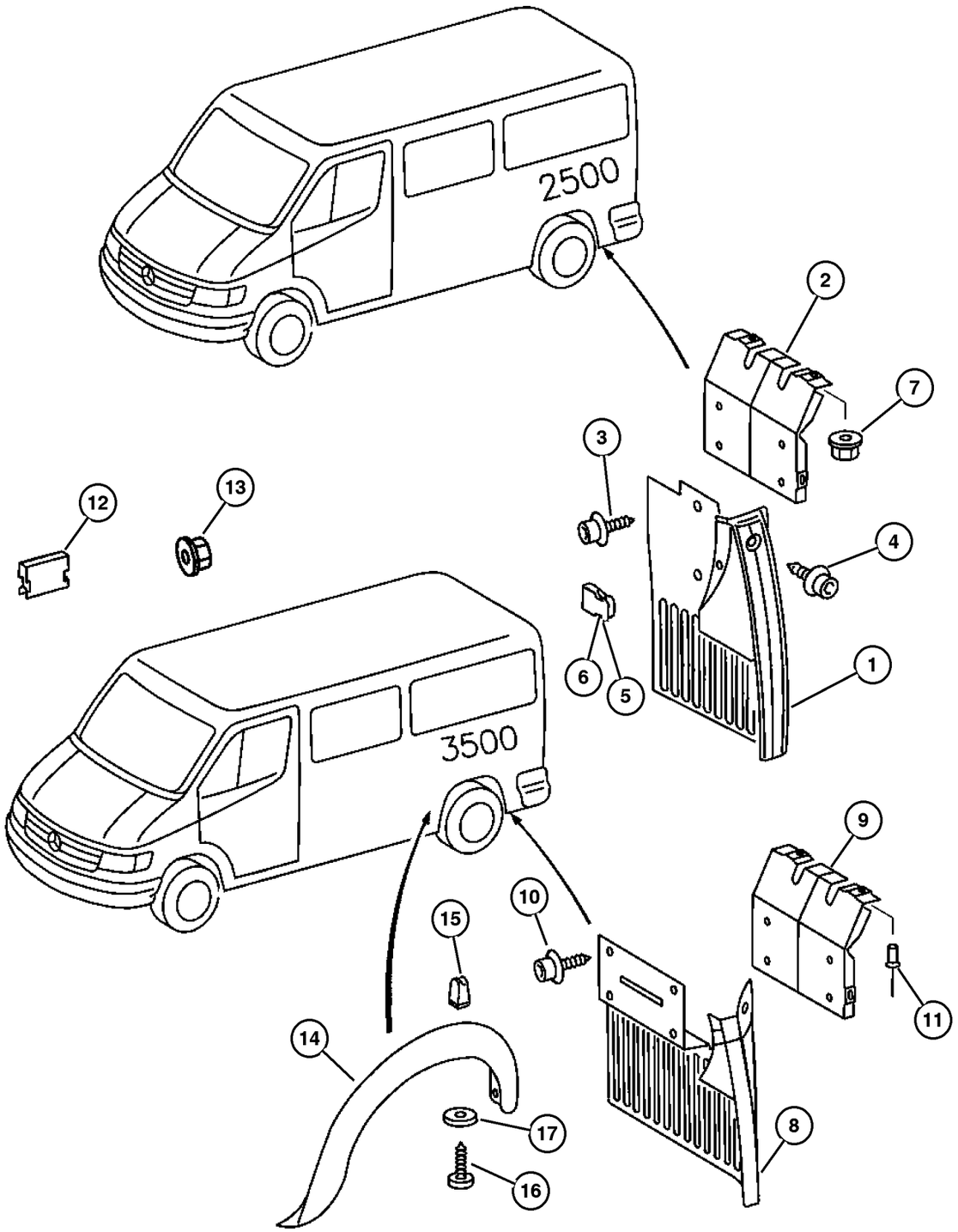

ITEM	PART NUMBER	QTY	LINE	SERIES	BODY	ENGINE	TRANS	TRIM	DESCRIPTION
1									GUARD, Splash
	5104 518AA	1	2, 6		01, 02, 06				With 15 Inch Wheels, Left
		1	2, 6		11, 12, 14, 15, 16				With 15 Inch Wheels, Left
		1	2, 6		51, 52, 54, 55, 56				With 15 Inch Wheels, Left
		1	3, 7		02, 06				With 15 Inch Wheels, Left
		1	3, 7		12, 15, 16				With 15 Inch Wheels, Left
	5104 521AA	1	2, 6		01, 02, 06				With 15 Inch Wheels, Right
		1	2, 6		11, 12, 14, 15, 16				With 15 Inch Wheels, Right
		1	2, 6		51, 52, 54, 55, 56				With 15 Inch Wheels, Right
		1	3, 7		02, 06				With 15 Inch Wheels, Right
		1	3, 7		12, 15, 16				With 15 Inch Wheels, Right
	5125 152AA	1	3, 7		12, 15, 16				Right
	5125 153AA	1	3, 7		12, 15, 16				Left
	5132 502AA	1	2, 6		01, 02, 06				With 16x6 Steel Wheels, Left
		1	2, 6		51, 52, 54, 55, 56				With 16x6 Steel Wheels, Left
	5132 507AA	1	2, 6		11, 12, 14, 15, 16				With 16x6 Steel Wheels, Right
		1	2, 6		51, 52, 54, 55, 56				With 16x6 Steel Wheels, Right
2									BRACKET
	5104 520AA	1	2, 6		11, 12, 14, 15, 16				Left
		1	2, 6		51, 52, 54, 55, 56				Left

Refer to Model Legend Information Bookmark

AR = Use as required - = Non illustrated part # = New this model year

March 3, 2006

« RETURN TO GROUP INDEX

»

Rear Splash Shield
Figure SVA-970

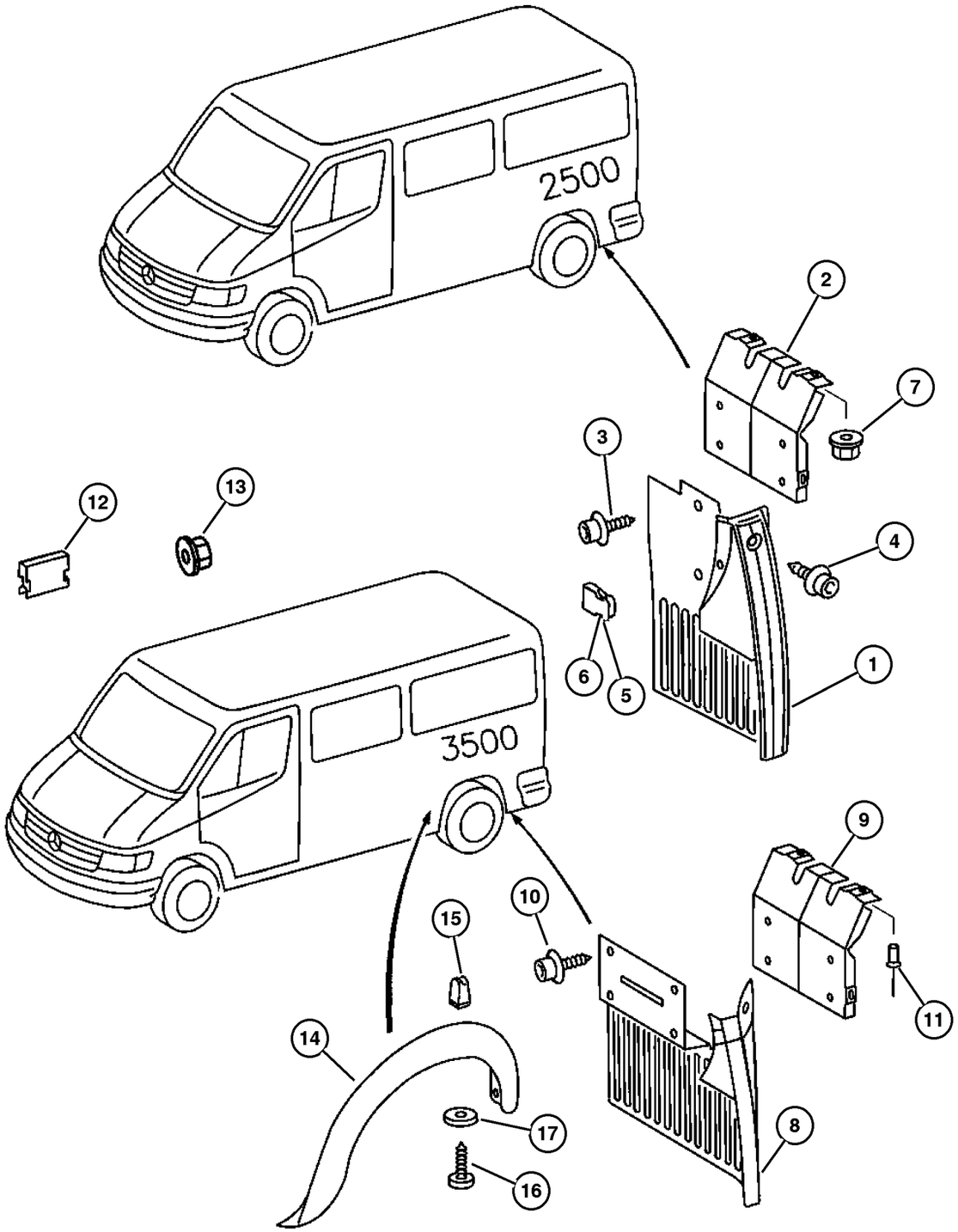

ITEM	PART NUMBER	QTY	LINE	SERIES	BODY	ENGINE	TRANS	TRIM	DESCRIPTION
	5104 522AA	1	2, 6		11, 12,				Right
					14, 15,				
					16				
		1	2, 6		51, 52,				Right
					54, 55,				
					56				
3									SCREW
	6104 581AA	7	2, 6		01, 02,				
					06				
		7	2, 6		11, 12,				
					14, 15,				
					16				
		7	2, 6		51, 52,				
					54, 55,				
					56				
		7	3, 7		02, 06				
		7	3, 7		12, 15,				
					16				
4									SCREW
	6104 581AA	2	2, 6		01, 02,				
					06				
		2	2, 6		11, 12,				
					14, 15,				
					16				
		2	2, 6		51, 52,				
					54, 55,				
					56				
		2	3, 7		02, 06				
		2	3, 7		12, 15,				
					16				
5									CLIP
	5103 875AA	2	2, 6		11, 12,				
					14, 15,				
					16				
		2	2, 6		51, 52,				
					54, 55,				
					56				
6									CLIP
	5132 726AA	2	2, 6		11, 12,				
					14, 15,				
					16				
		2	2, 6		51, 52,				
					54, 55,				
					56				
7									NUT, Hex

Refer to Model Legend Information Bookmark

Rear Splash Shield
Figure SVA-970

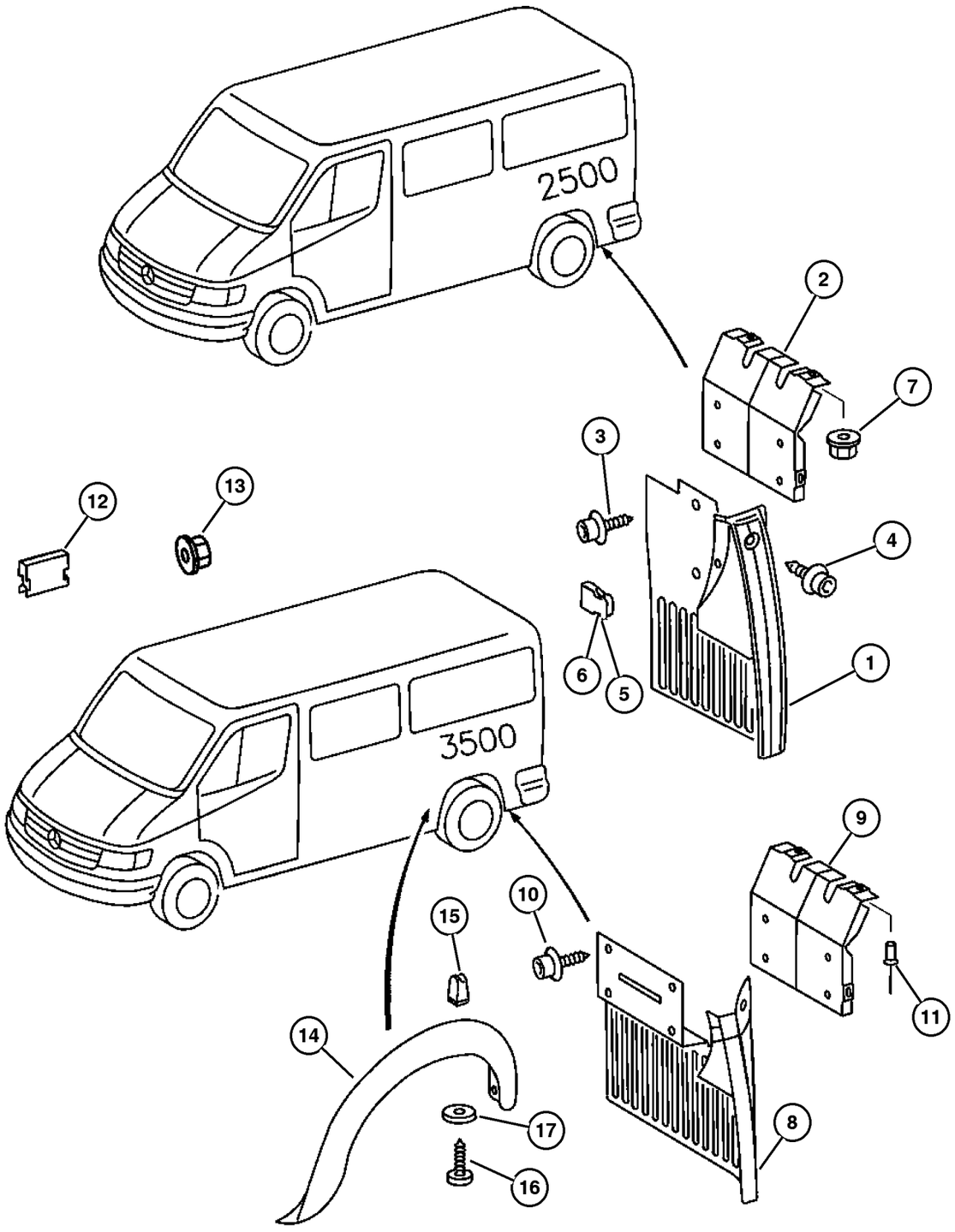

ITEM	PART NUMBER	QTY	LINE	SERIES	BODY	ENGINE	TRANS	TRIM	DESCRIPTION
	6104 911AA	2	2, 6		11, 12, 14, 15, 16				
		2	2, 6		51, 52, 54, 55, 56				
		1	3, 7		02, 06				
		1	3, 7		12, 15, 16				
8									GUARD, Splash
	5125 152AA	1	3, 7		12, 15, 16				Left
	5125 153AA	1	3, 7		12, 15, 16				Right
9	5125 158AA	2	3, 7		12, 15, 16				BRACKET, Right & Left
10	6104 581AA	8	3, 7		12, 15, 16				SCREW
11	6104 871AA	4	3, 7		12, 15, 16				RIVET
12	5125 567AA	4	3, 7		12, 15, 16				CLIP
13	6104 911AA	2	3, 7		12, 15, 16				NUT, Hex
14	5125 142AA	2	3, 7		12, 15, 16				MOLDING, Wheel Opening Flare
15	5098 837AB	16	3, 7		12, 15, 16				NUT, Plastic Snap-in
16	6104 614AA	16	2, 6		11, 12, 14, 15, 16				SCREW
17	5104 639AA	16	3, 7		12, 15, 16				WASHER

Refer to Model Legend Information Bookmark

AR = Use as required - = Non illustrated part # = New this model year

March 3, 2006

« RETURN TO GROUP INDEX

Rear Step Panel
Figure SVA-980

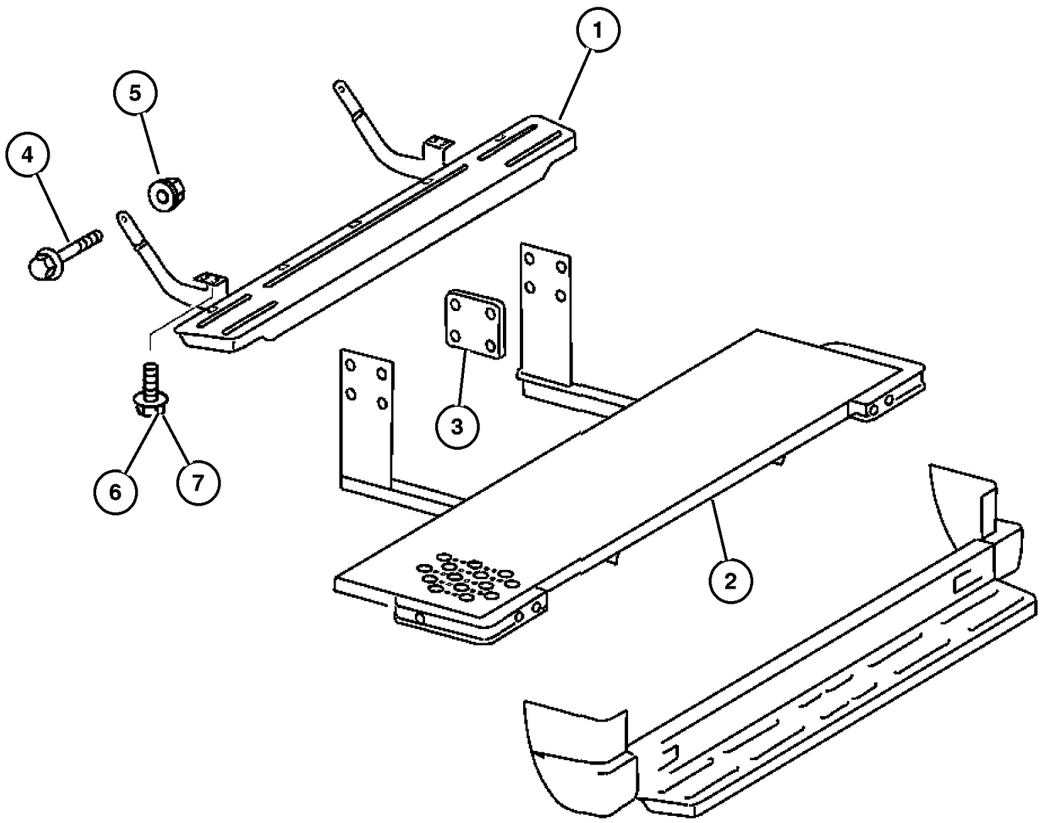

ITEM	PART NUMBER	QTY	LINE	SERIES	BODY	ENGINE	TRANS	TRIM	DESCRIPTION
1									BUMPER, Step
	5104 132AA	1	2, 6		12, 15				With 140 & 158 Inch Wheelbase
		1	2, 6		52, 55				With 140 & 158 Inch Wheelbase
	5104 133AA	1	2, 6		11, 14				With 118 Inch Wheelbase
		1	2, 6		51, 54				With 118 Inch Wheelbase
	5120 038AA	1	3, 7		12, 15				With 140 Inch Wheelbase
	5120 040AA	1	3, 7		16				With 158 Inch Wheelbase
2									BUMPER, Step
	5104 135AA	1	2, 6		16				
		1	2, 6		56				
3									PLATE, Towing Mounting
	5104 056AA	2	2, 6		01, 02, 06				
		2	2, 6		11, 12, 14, 15, 16				
		2	2, 6		51, 52, 54, 55, 56				
		2	3, 7		02, 06				
		2	3, 7		12, 15, 16				
4									SCREW
	5104 664AA	8	2, 6		11, 12, 14, 15, 16				
		8	2, 6		51, 52, 54, 55, 56				
		8	3, 7		12, 15, 16				
5									NUT
	6104 718AA	8	2, 6		01, 02, 06				
		8	2, 6		11, 12, 14, 15, 16				
		8	2, 6		51, 52, 54, 55, 56				
		8	3, 7		02, 06				
		8	3, 7		12, 15, 16				
6									BOLT, Hex Flange Head, M10x1.50x25

Refer to Model Legend Information Bookmark

AR = Use as required - = Non illustrated part # = New this model year

March 3, 2006

« RETURN TO GROUP INDEX

»

Rear Step Panel
Figure SVA-980

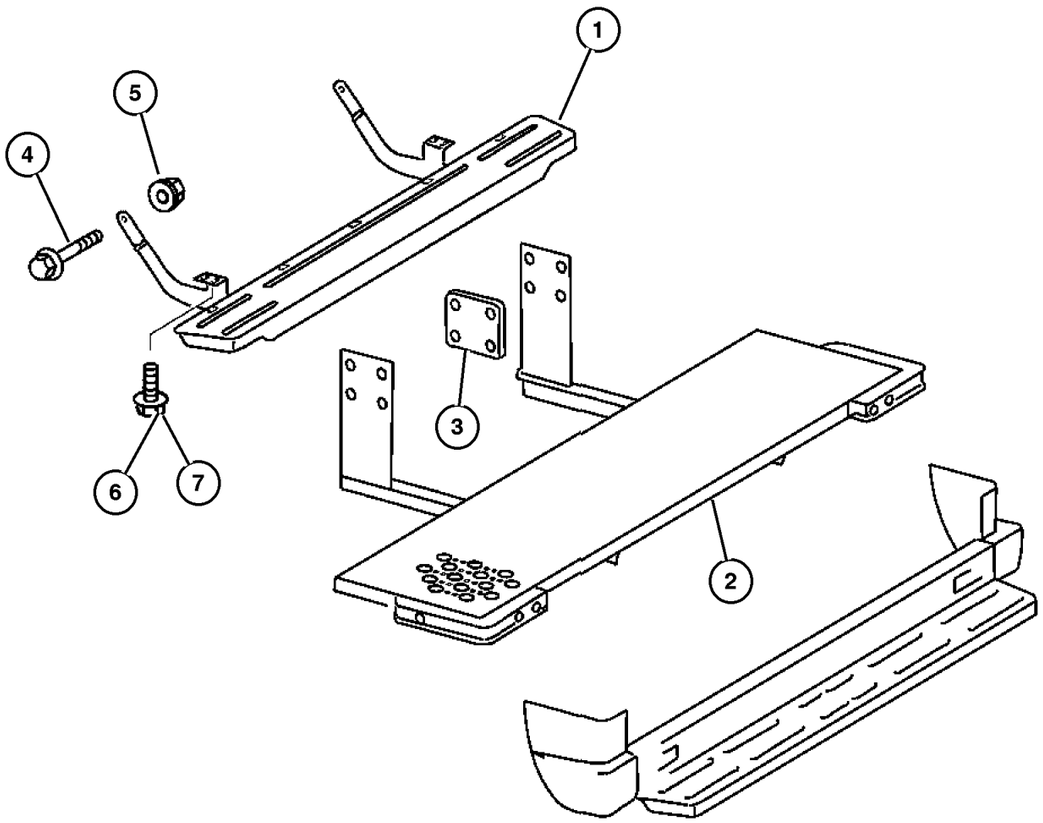

ITEM	PART NUMBER	QTY	LINE	SERIES	BODY	ENGINE	TRANS	TRIM	DESCRIPTION
	6104 215AA	2	2, 6		11, 12, 14, 15, 16				Rocker Panel to Frame
		2	2, 6		51, 52, 54, 55, 56				Rocker Panel to Frame
		4	3, 7		12, 15, 16				Rocker Panel to Frame
7									SCREW
	5104 666AA	4	2, 6		11, 12, 14, 15, 16				
		4	2, 6		51, 52, 54, 55, 56				
		4	3, 7		12, 15, 16				

Refer to Model Legend Information Bookmark

AR = Use as required - = Non illustrated part # = New this model year

March 3, 2006

« RETURN TO GROUP INDEX

«

Partition Wall & Load Protection Grill
Figure SVA-990

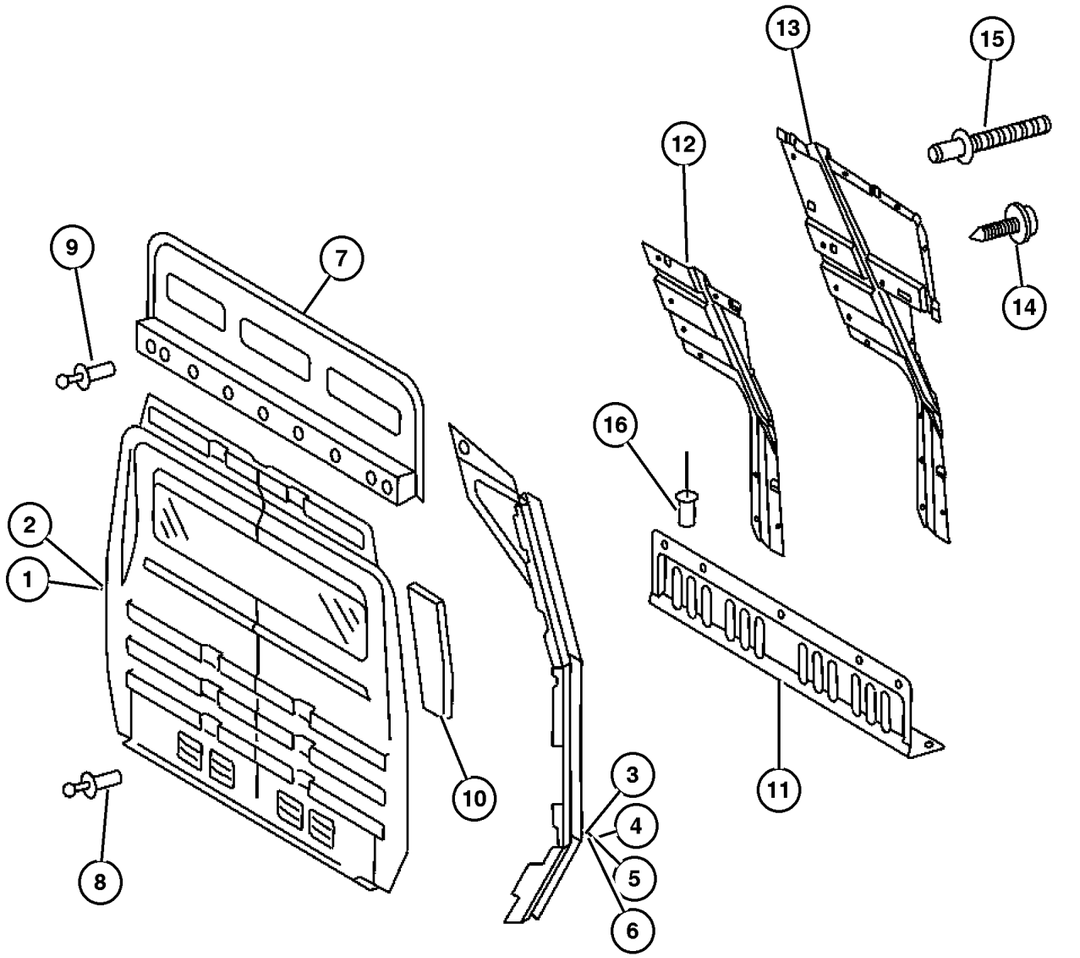

ITEM	PART NUMBER	QTY	LINE	SERIES	BODY	ENGINE	TRANS	TRIM	DESCRIPTION
1									PANEL, Cargo Compartment, Without Windows
	5104 304AA	1	2, 6		11, 12, 14, 15, 16				
		1	3, 7		12, 15, 16				
2									PANEL, Cargo Compartment, With Windows
	5104 307AA	1	2, 6		11, 12, 14, 15, 16				
		1	3, 7		12, 15, 16				
3									PANEL EXTENSION, Extension, W/O Slide
	5104 310AA	1	2, 6		11, 12, 14, 15, 16				Left
		1	3, 7		12, 15, 16				Left
4									PANEL EXTENSION, Extension, W/ Slide
	5104 311AA	1	2, 6		11, 12, 14, 15, 16				Left
		1	3, 7		12, 15, 16				Left
5									PANEL EXTENSION, Extension, W/O Slide
	5123 641AA	1	2, 6		11, 12, 14, 15, 16				Right
		1	3, 7		12, 15, 16				Right
6									PANEL EXTENSION, Extension, W/ Slide
	5104 312AA	1	2, 6		11, 12, 14, 15, 16				Right
		1	3, 7		12, 15, 16				Right
7									PANEL, Cargo Compartment, Upper
	5104 308AA	1	2, 6		14, 15, 16				

Refer to Model Legend Information Bookmark

Partition Wall & Load Protection Grill
Figure SVA-990

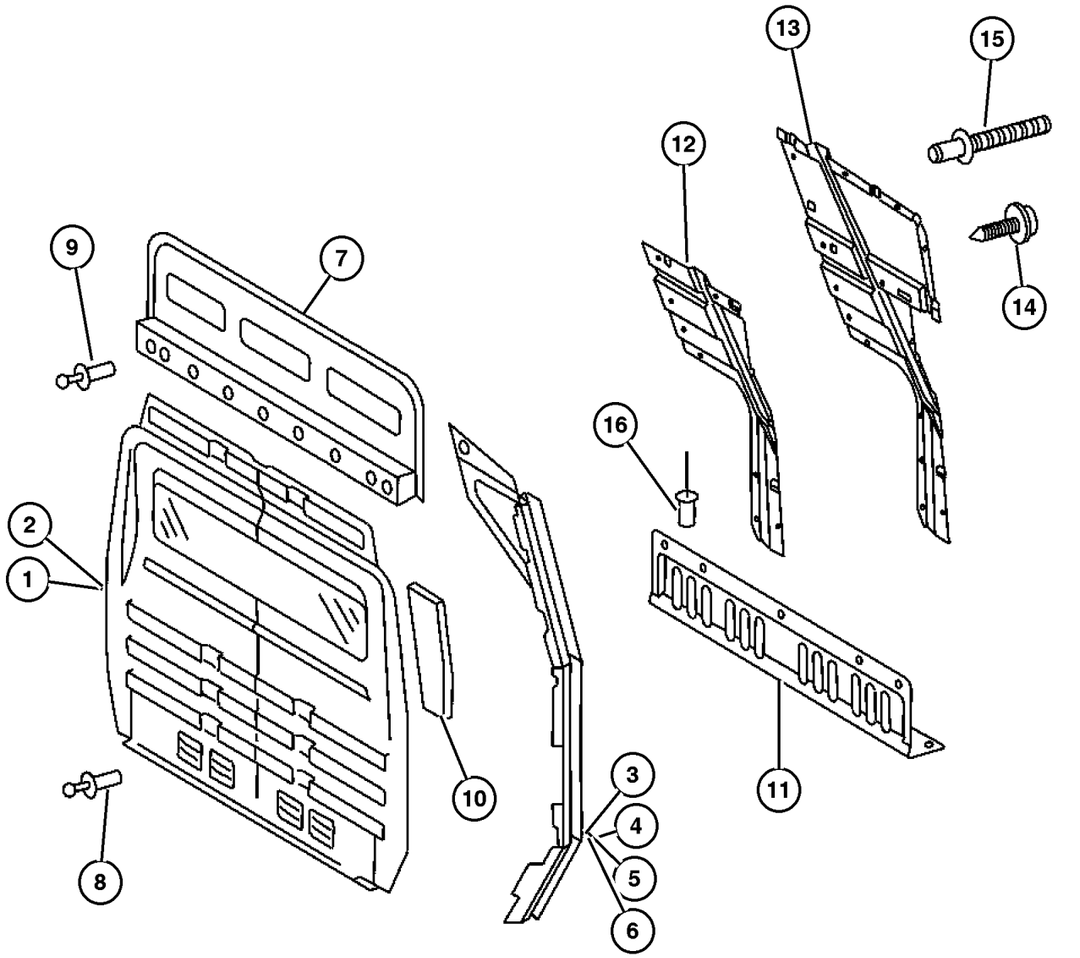

ITEM	PART NUMBER	QTY	LINE	SERIES	BODY	ENGINE	TRANS	TRIM	DESCRIPTION
		1	3, 7		15, 16				
8									RIVET
	5103 839AA	16	2, 6		11, 12, 14, 15, 16				
		16	3, 7		12, 15, 16				
9									RIVET
	5103 838AA	4	2, 6		01, 02, 06				
		4	2, 6		11, 12, 14, 15, 16				
		4	2, 6		51, 52, 54, 55, 56				
		4	3, 7		12, 15, 16				
10									PAD, Isolator
	5103 712AA	1	2, 6		11, 12, 14, 15, 16				
		1	2, 6		51, 52, 54, 55, 56				
		1	3, 7		02, 06				
		1	3, 7		12, 15, 16				
11	5123 631AA	1	3, 7		12, 15, 16				REINFORCEMENT, Cab Back
12	5104 313AA	1							REINFORCEMENT, Side Panel
13	5104 314AA	1							REINFORCEMENT, Side Panel
14									SCREW, Tapping
	6104 580AA	2	2, 6		11, 12, 14, 15, 16				
		2	2, 6		51, 52, 54, 55, 56				
		2	3, 7		12, 15, 16				
15									RIVET
	5103 838AA	4	2, 6		01, 02, 06				

Refer to Model Legend Information Bookmark

AR = Use as required - = Non illustrated part # = New this model year

March 3, 2006

« RETURN TO GROUP INDEX

Partition Wall & Load Protection Grill
Figure SVA-990

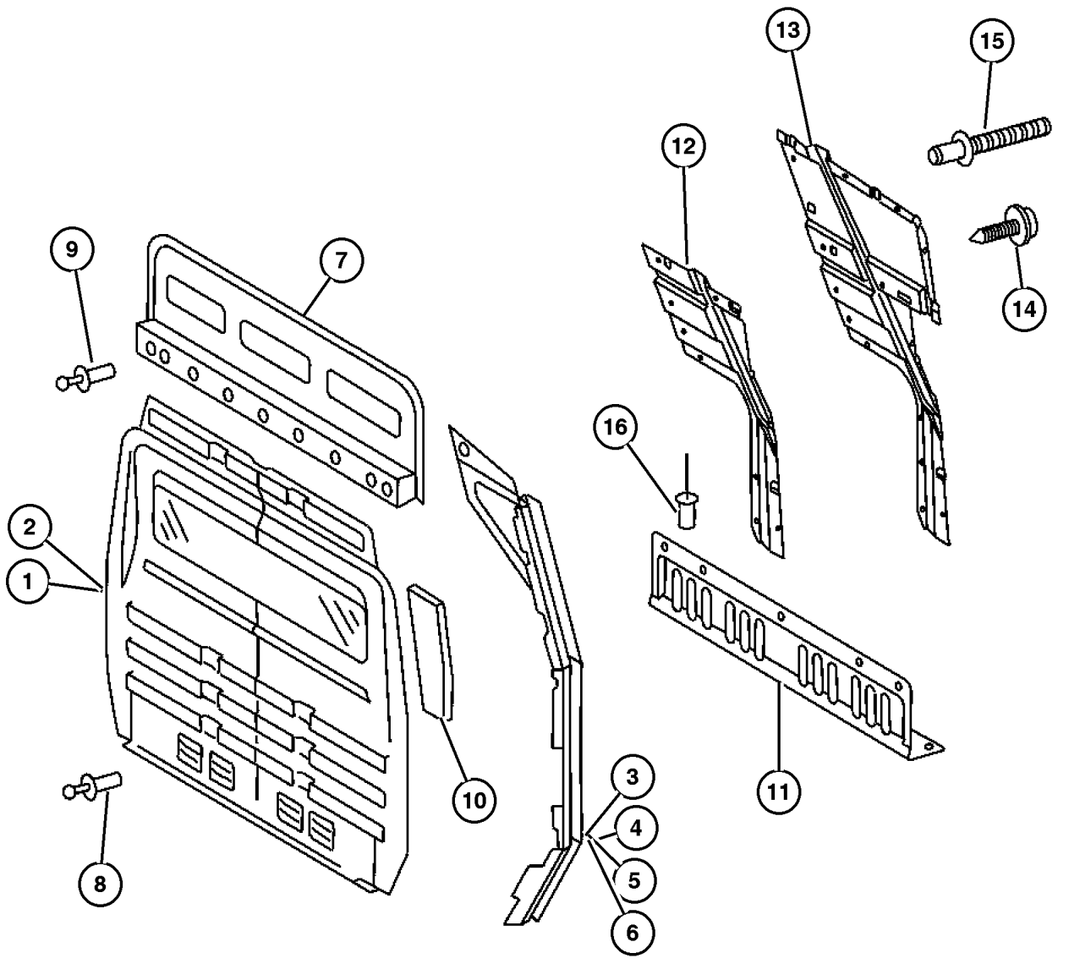

ITEM	PART NUMBER	QTY	LINE	SERIES	BODY	ENGINE	TRANS	TRIM	DESCRIPTION
		4	2, 6		11, 12, 14, 15, 16				
		4	2, 6		51, 52, 54, 55, 56				
16	5125 822AA	10	3, 7		12, 15, 16				RIVET, Blind Bulb

Refer to Model Legend Information Bookmark

AR = Use as required - = Non illustrated part # = New this model year

March 3, 2006

« RETURN TO GROUP INDEX

Low Roof Panel
Figure SVA-1110

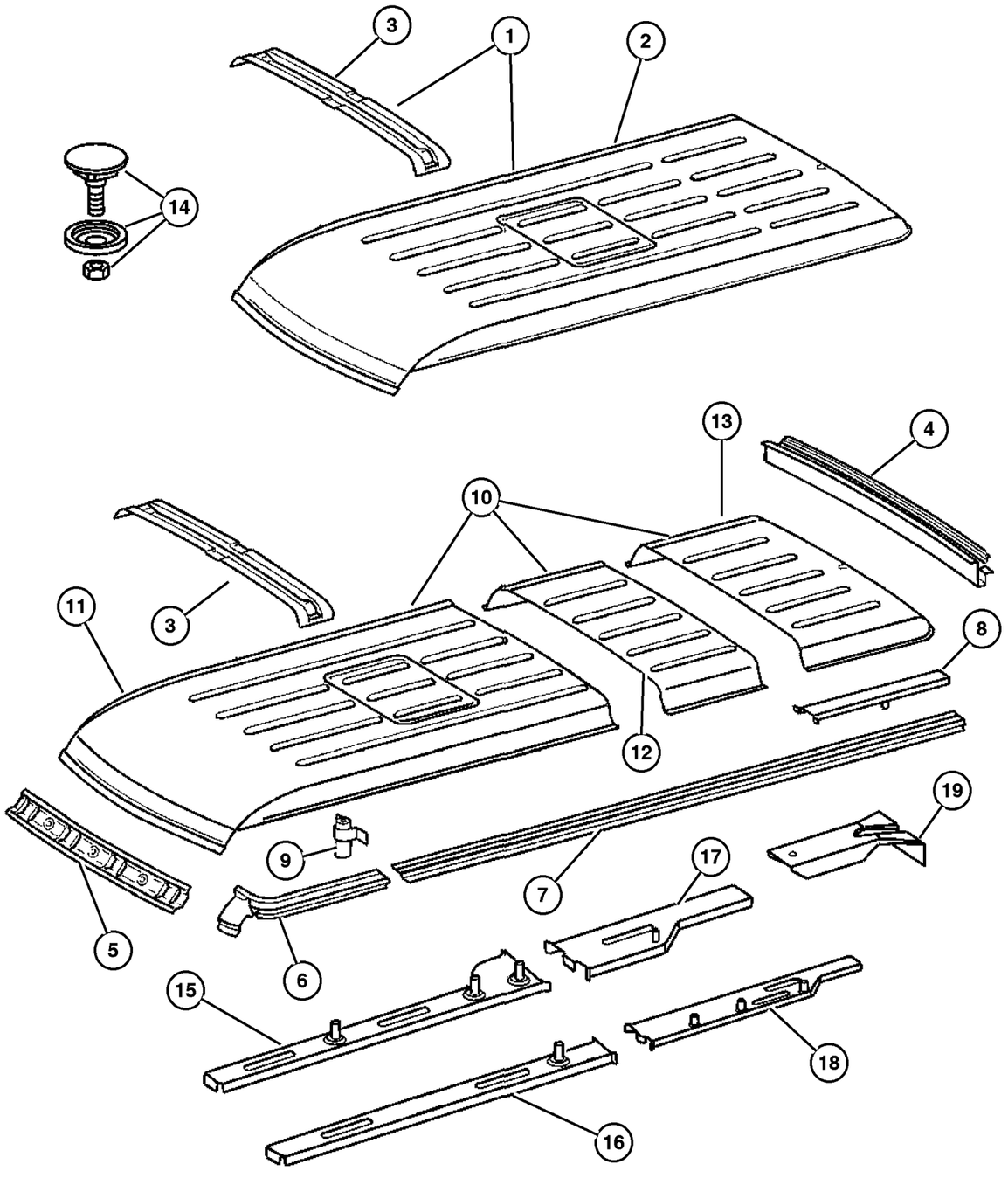

ITEM	PART NUMBER	QTY	LINE	SERIES	BODY	ENGINE	TRANS	TRIM	DESCRIPTION
1									ROOF
	5134 039AA	1	2, 6		11				[118] Inch Wheel Base
		1	2, 6		51				[118] Inch Wheel Base
2									PANEL, Roof
	5122 155AA	1	2, 6		11, 14				
		1	2, 6		51, 54				
3									BOW, Roof
	5122 107AA	3	2, 6		11				
		4	2, 6		12				
		3	2, 6		51				
		4	2, 6		52				
		4	3, 7		15				
4									RAIL, Roof
	5122 058AA	1	2, 6		11, 12				
		1	2, 6		51, 52				
		1	3, 7		12				
5									SUPPORT, Roof
	5104 163AA	1	2, 6		01, 02, 06				
		1	2, 6		11, 12, 14, 15, 16				
		1	2, 6		51, 52, 54, 55, 56				
		1	3, 7		02, 06				
		1	3, 7		12, 15, 16				
6									RAIL, Roof Side
	5104 194AA	1	2, 6		11, 12, 14, 15, 16				Left
		1	2, 6		51, 52, 54, 55, 56				Left
		1	3, 7		12, 15, 16				Left
	5104 196AA	1	2, 6		11, 12, 14, 15, 16				Right
		1	2, 6		51, 52, 54, 55, 56				Right
		1	3, 7		12, 15, 16				Right
7									RAIL, Roof Side

Refer to Model Legend Information Bookmark

AR = Use as required - = Non illustrated part # = New this model year

March 3, 2006

« RETURN TO GROUP INDEX

»

Low Roof Panel
Figure SVA-1110

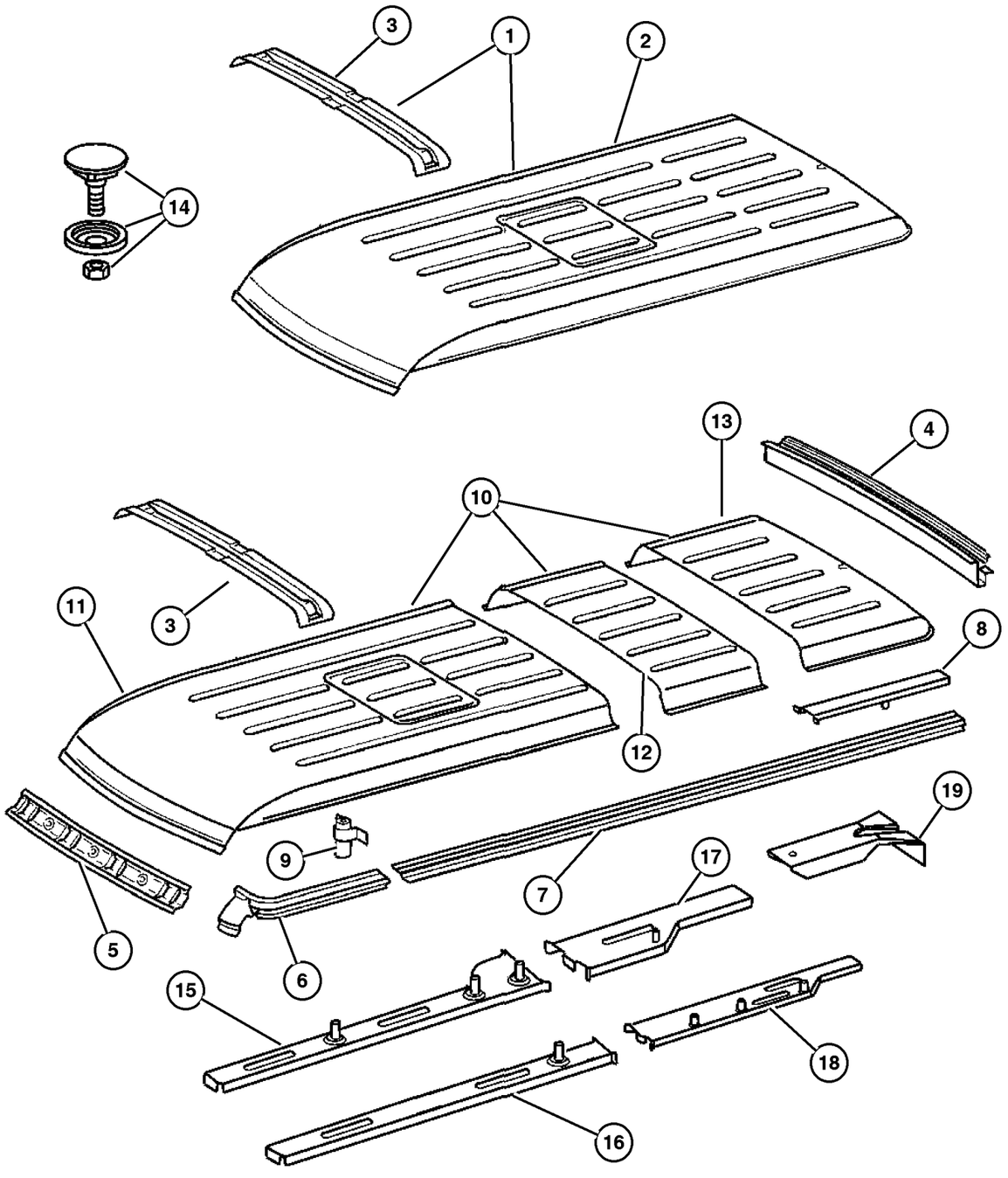

ITEM	PART NUMBER	QTY	LINE	SERIES	BODY	ENGINE	TRANS	TRIM	DESCRIPTION
	5104 191AA	1	2, 6		16				[158] Inch Wheel Base, Right & Left
		1	2, 6		56				[158] Inch Wheel Base, Right & Left
		1	3, 7		16				[158] Inch Wheel Base, Right & Left
	5121 826AA	1	2, 6		11, 14				[118] Inch Wheel Base, Right & Left
		1	2, 6		51, 54				[118] Inch Wheel Base, Right & Left
	5121 827AA	1	2, 6		12, 15				[140] Inch Wheel Base, Right & Left
		1	2, 6		52, 55				[140] Inch Wheel Base, Right & Left
8									REINFORCEMENT, Roof Panel
	5131 214AA	2	2, 6		12				[140] Inch Wheel Base
		2	2, 6		52				[140] Inch Wheel Base
9									REINFORCEMENT, Roof Panel
	5131 213AA	2	2, 6		12				[140] Inch Wheel Base
		2	2, 6		52				[140] Inch Wheel Base
10									ROOF
	5134 036AA	1	2, 6		12				[140] Inch Wheel Base
		1	2, 6		52				[140] Inch Wheel Base
		1	3, 7		15				[140] Inch Wheel Base
11									PANEL, Roof
	5122 156AA	1	2, 6		12				[140] Inch Wheel Base
		1	2, 6		52				[140] Inch Wheel Base
		1	3, 7		15				[140] Inch Wheel Base
12									PANEL, Roof
	5122 133AA	1	2, 6		12				[140] Inch Wheel Base
		1	2, 6		52				[140] Inch Wheel Base
		1	3, 7		15				[140] Inch Wheel Base
13									PANEL, Roof
	5122 134AA	1	2, 6		12				
		1	2, 6		52				
		1	3, 7		15				
14									PANEL, For Sealing Antenna
	5124 422AA	1	2, 6		01, 02, 06				
		1	2, 6		11, 12, 14, 15, 16				
		1	2, 6		51, 52, 54, 55, 56				

Refer to Model Legend Information Bookmark

AR = Use as required - = Non illustrated part # = New this model year

March 3, 2006

« RETURN TO GROUP INDEX

Low Roof Panel
Figure SVA-1110

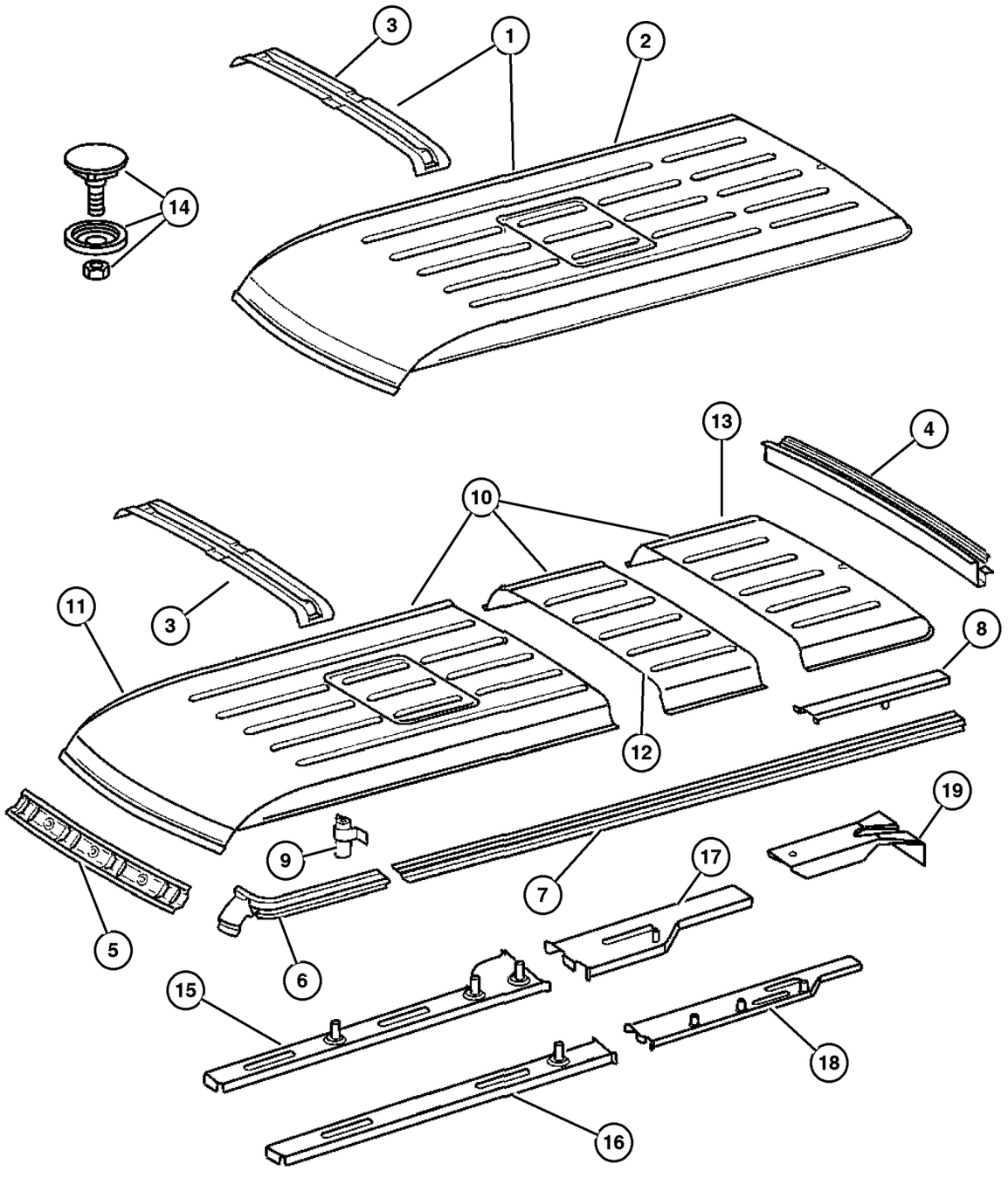

ITEM	PART NUMBER	QTY	LINE	SERIES	BODY	ENGINE	TRANS	TRIM	DESCRIPTION
		1	3, 7		02, 06				
		1	3, 7		12, 15, 16				
15									BRACKET, Roof
	5122 081AA	1	2, 6		12				Left
		1	2, 6		52				Left
		1	3, 7		15				Left
	5122 083AA	1	2, 6		12				Right
		1	2, 6		52				Right
		1	3, 7		15				Right
16									BRACKET, Roof, Front Right
	5122 090AA	1	2, 6		11				
		1	2, 6		51				
17									BRACKET, Roof
	5122 084AA	1	2, 6		12				Left
		1	2, 6		52				Left
		1	3, 7		15				Left
	5122 085AA	1	2, 6		12				Right
		1	2, 6		52				Right
		1	3, 7		15				Right
18									BRACKET, Roof
	5122 092AA	1	2, 6		11				Right
		1	2, 6		51				Right
	5122 093AA	1	2, 6		11				Left
		1	2, 6		51				Left
19									REINFORCEMENT, Roof Panel
	5122 125AA	2	2, 6		11, 12, 14, 15, 16				
		2	2, 6		51, 52, 54, 55, 56				
		2	3, 7		12, 15, 16				

Refer to Model Legend Information Bookmark

AR = Use as required - = Non illustrated part # = New this model year

March 3, 2006

« RETURN TO GROUP INDEX

«

High Roof Panel
Figure SVA-1120

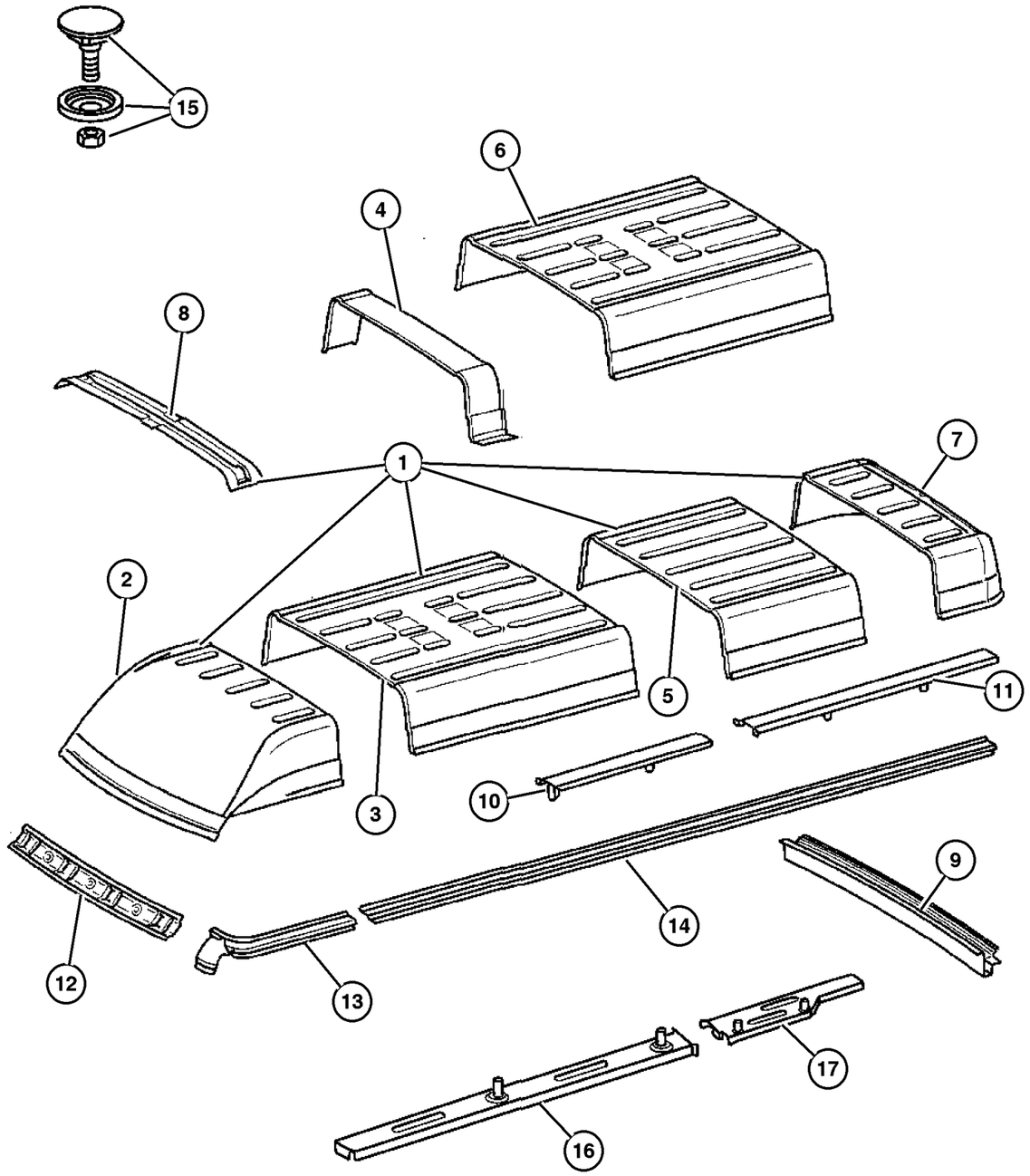

ITEM	PART NUMBER	QTY	LINE	SERIES	BODY	ENGINE	TRANS	TRIM	DESCRIPTION
1									ROOF
	5104 228AA	1	2, 6		12				[140] Inch Wheel Base
		1	2, 6		52				[140] Inch Wheel Base
		1	3, 7		15				[140] Inch Wheel Base
	5134 037AA	1	2, 6		16				[158] Inch Wheel Base
		1	2, 6		56				[158] Inch Wheel Base
		1	3, 7		16				[158] Inch Wheel Base
	5134 038AA	1	2, 6		11				[118] Inch Wheel Base
		1	2, 6		51				[118] Inch Wheel Base
2									PANEL, Roof
	5104 233AA	1	2, 6		14, 15, 16				
		1	2, 6		11, 12, 16				
		1	2, 6		54, 55, 56				
		1	2, 6		51, 52, 56				
		1	3, 7		15, 16				
3									PANEL, Roof
	5122 143AA	1	2, 6		11, 12, 16				
		1	2, 6		16				
		1	2, 6		54, 55, 56				
		1	2, 6		56				
		1	3, 7		15, 16				
		1	3, 7		16				
4									EXTENSION, Roof Bow
	5131 242AA	1	2, 6		14				
		1	2, 6		54				
5									PANEL, Roof
	5122 144AA	1	2, 6		12				[140] Inch Wheel Base
		1	2, 6		52				[140] Inch Wheel Base
		1	3, 7		15				[140] Inch Wheel Base
6									PANEL, Roof
	5104 232AA	1	2, 6		11, 12, 16				[158] Inch Wheel Base, With Electric Fan
		1	3, 7		15, 16				[158] Inch Wheel Base, With Electric Fan
	5122 143AA	1	2, 6		11, 12, 16				[140 & 158] Inch Wheel Base
		1	2, 6		54, 55, 56				[140 & 158] Inch Wheel Base
		1	3, 7		15, 16				[140 & 158] Inch Wheel Base
7									PANEL, Roof

Refer to Model Legend Information Bookmark

AR = Use as required - = Non illustrated part # = New this model year

March 3, 2006

« RETURN TO GROUP INDEX

»

High Roof Panel
Figure SVA-1120

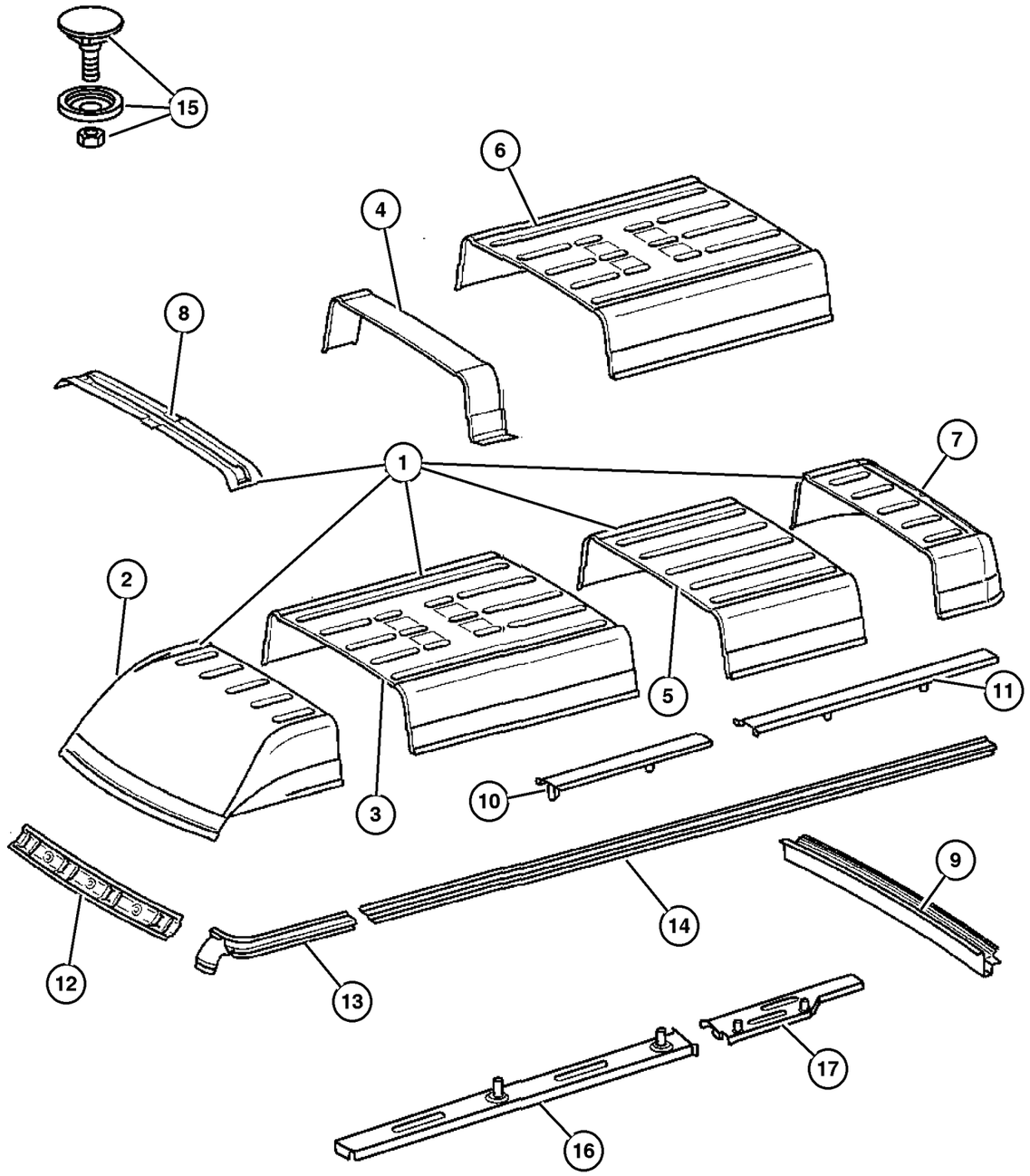

ITEM	PART NUMBER	QTY	LINE	SERIES	BODY	ENGINE	TRANS	TRIM	DESCRIPTION
	5104 231AA	1	2, 6		12, 16				
		1	2, 6		52, 56				
		1	3, 7		15, 16				
8									BOW, Roof
	5104 227AA	1	2, 6		14, 15, 16				[140 & 158] Inch Wheel Base
		1	2, 6		54, 55, 56				[140 & 158] Inch Wheel Base
		1	3, 7		15, 16				[140 & 158] Inch Wheel Base
	5104 229AA	2	2, 6		11				With Electric Fan
		3	2, 6		12				With Electric Fan
		4	2, 6		16				With Electric Fan
		2	2, 6		51				With Electric Fan
		3	2, 6		52				With Electric Fan
		4	2, 6		56				With Electric Fan
		3	3, 7		15				With Electric Fan
		4	3, 7		16				With Electric Fan
	5122 107AA	3	2, 6		11				[118] Inch Wheel Base
		4	2, 6		12				[118] Inch Wheel Base
		3	2, 6		51				[118] Inch Wheel Base
		4	2, 6		52				[118] Inch Wheel Base
		4	3, 7		15				[118] Inch Wheel Base
9									BOW, Roof
	5104 226AA	1	2, 6		14, 15, 16				
		1	2, 6		54, 55, 56				
10									REINFORCEMENT, Roof Panel
	5131 215AA	2	2, 6		15				
		2	2, 6		55				
11									REINFORCEMENT, Roof Panel
	5131 216AA	2	2, 6		11				
		2	2, 6		51				
12									SUPPORT, Roof
	5104 163AA	1	2, 6		01, 02, 06				
		1	2, 6		11, 12, 14, 15, 16				
		1	2, 6		51, 52, 54, 55, 56				
		1	3, 7		02, 06				
		1	3, 7		12, 15, 16				
13									RAIL, Roof Side

Refer to Model Legend Information Bookmark

High Roof Panel
Figure SVA-1120

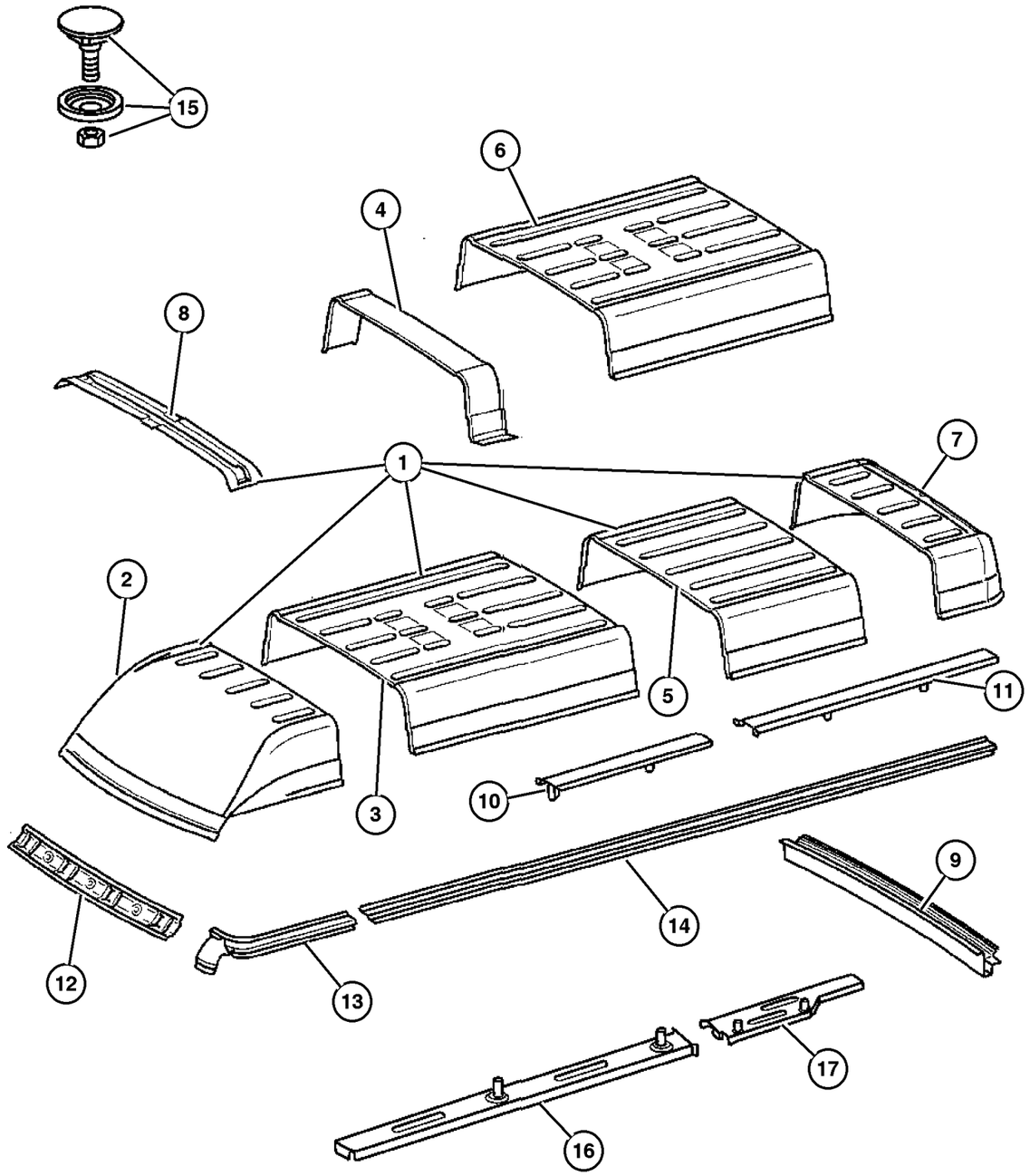

ITEM	PART NUMBER	QTY	LINE	SERIES	BODY	ENGINE	TRANS	TRIM	DESCRIPTION
	5104 194AA	1	2, 6		11, 12, 14, 15, 16				Left
		1	2, 6		51, 52, 54, 55, 56				Left
		1	3, 7		12, 15, 16				Left
	5104 196AA	1	2, 6		11, 12, 14, 15, 16				Right
		1	2, 6		51, 52, 54, 55, 56				Right
		1	3, 7		12, 15, 16				Right
14									RAIL, Roof Side
	5104 191AA	1	2, 6		16				[158] Inch wheel Base
		1	2, 6		56				[158] Inch wheel Base
		1	3, 7		16				[158] Inch wheel Base
	5121 827AA	1	2, 6		12, 15				[140] Inch Wheel Base
		1	2, 6		52, 55				[140] Inch Wheel Base
		1	3, 7		12, 15				[140] Inch Wheel Base
15									PANEL, For Sealing Antenna
	5124 422AA	1	2, 6		01, 02, 06				
		1	2, 6		11, 12, 14, 15, 16				
		1	2, 6		51, 52, 54, 55, 56				
		1	3, 7		02, 06				
		1	3, 7		12, 15, 16				
16									BRACKET, Roof
	5122 086AA	1	2, 6		15				
		1	2, 6		55				
		1	3, 7		15				
17									BRACKET, Roof
	5122 088AA	1	2, 6		15				Left Rear
		1	2, 6		55				Left Rear
		1	3, 7		15				Left Rear
	5122 089AA	1	2, 6		15				Right Rear
		1	2, 6		55				Right Rear

Refer to Model Legend Information Bookmark

High Roof Panel
Figure SVA-1120

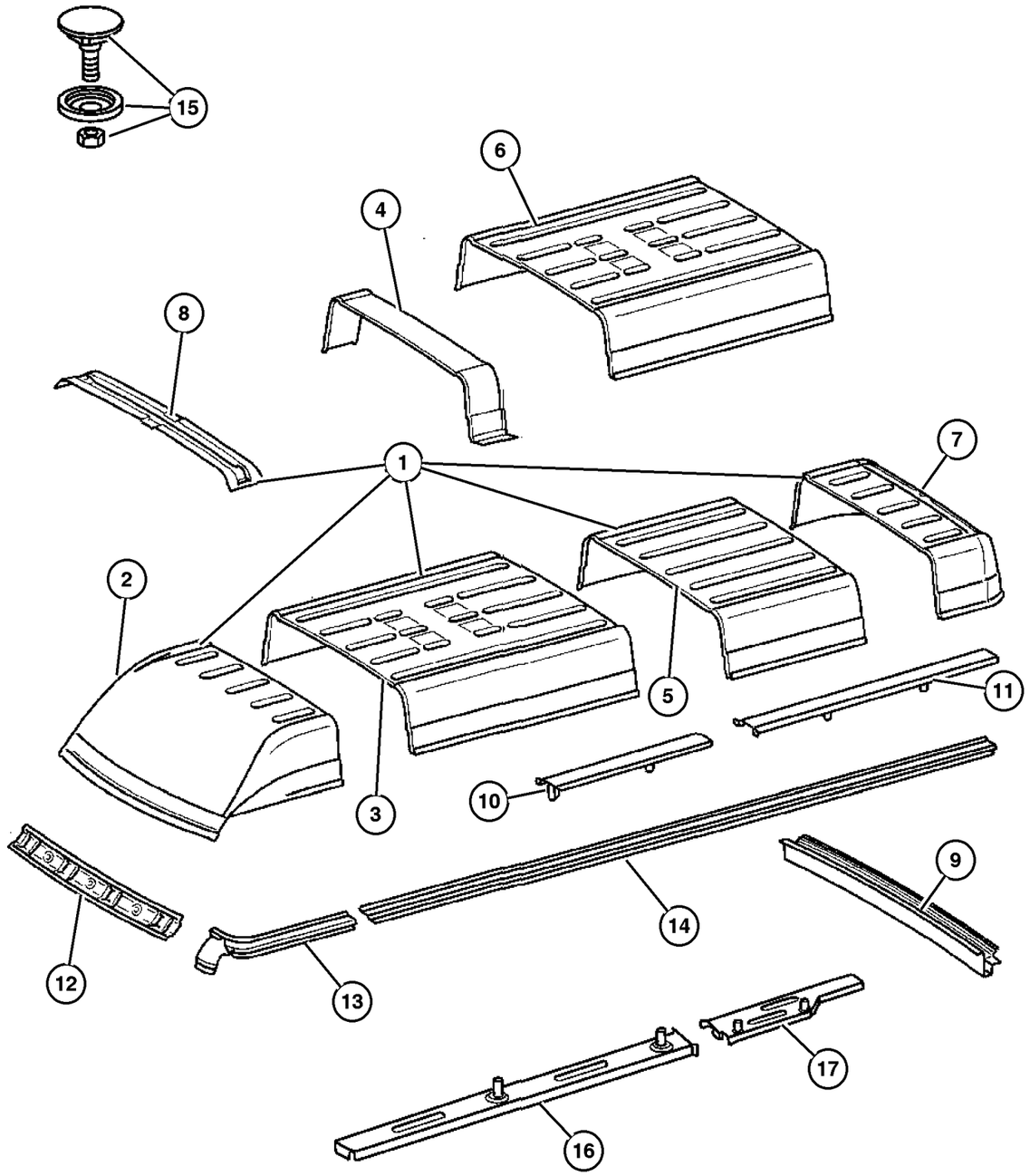

ITEM	PART NUMBER	QTY	LINE	SERIES	BODY	ENGINE	TRANS	TRIM	DESCRIPTION
		1	3, 7		15				Right Rear

Refer to Model Legend Information Bookmark

Manual Sunroof
Figure SVA-1210

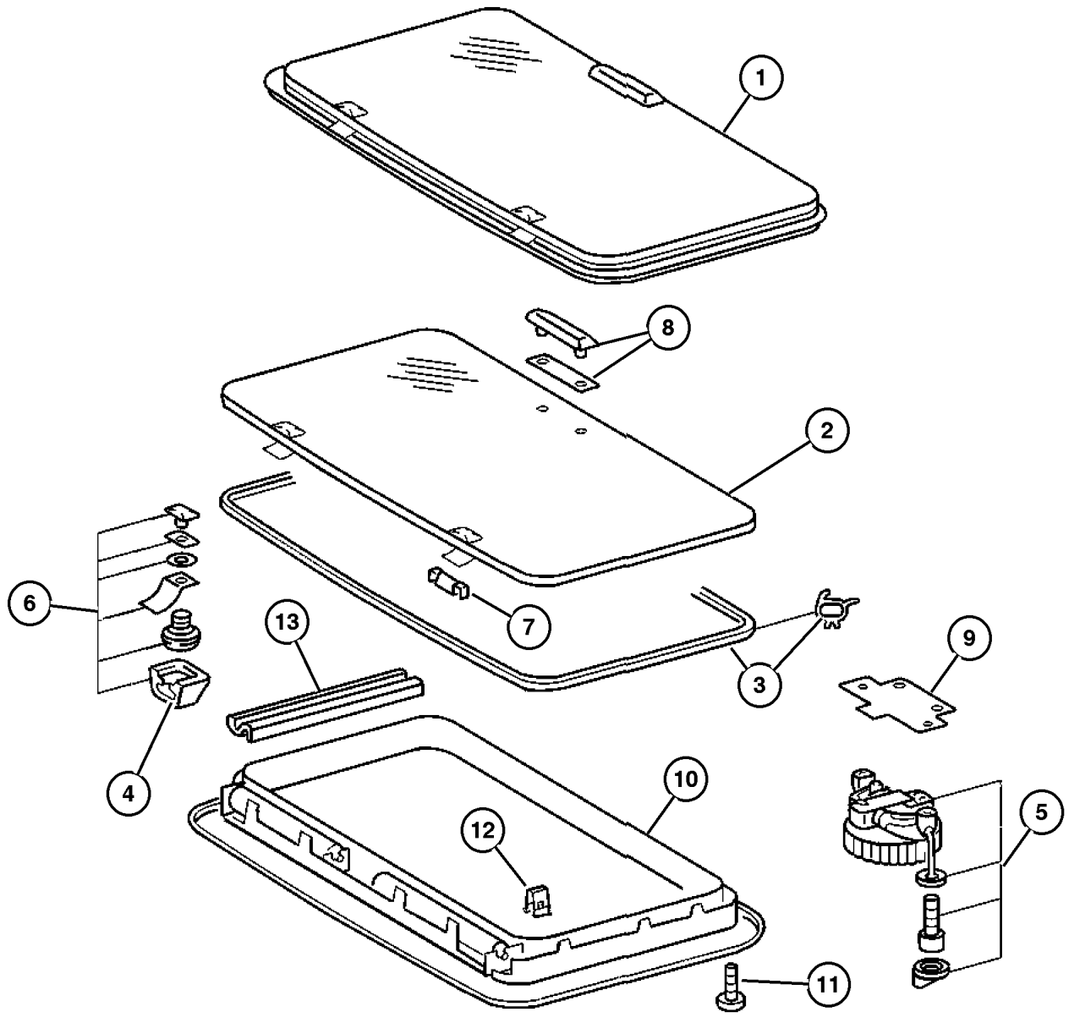

ITEM	PART NUMBER	QTY	LINE	SERIES	BODY	ENGINE	TRANS	TRIM	DESCRIPTION
1									SUNROOF, Complete
	5104 476AA	1	2, 6		01, 02, 06				
		1	2, 6		11, 12, 14, 15, 16				
		1	2, 6		51, 52, 54, 55, 56				
		1	3, 7		02, 06				
		1	3, 7		12, 15, 16				
2									GLASS, Sunroof
	5134 005AA	1	2, 6		01, 02, 06				
		1	2, 6		11, 12, 14, 15, 16				
		1	2, 6		51, 52, 54, 55, 56				
		1	3, 7		02, 06				
		1	3, 7		12, 15, 16				
3									SEAL, Sunroof
	5134 006AA	1	2, 6		01, 02, 06				
		1	2, 6		11, 12, 14, 15, 16				
		1	2, 6		51, 52, 54, 55, 56				
		1	3, 7		02, 06				
		1	3, 7		12, 15, 16				
4									COVER, Hinge
	5134 007AA	1	2, 6		01, 02, 06				
		1	2, 6		11, 12, 14, 15, 16				
		1	2, 6		51, 52, 54, 55, 56				

Refer to Model Legend Information Bookmark

AR = Use as required - = Non illustrated part # = New this model year

March 3, 2006

« RETURN TO GROUP INDEX

»

Manual Sunroof
Figure SVA-1210

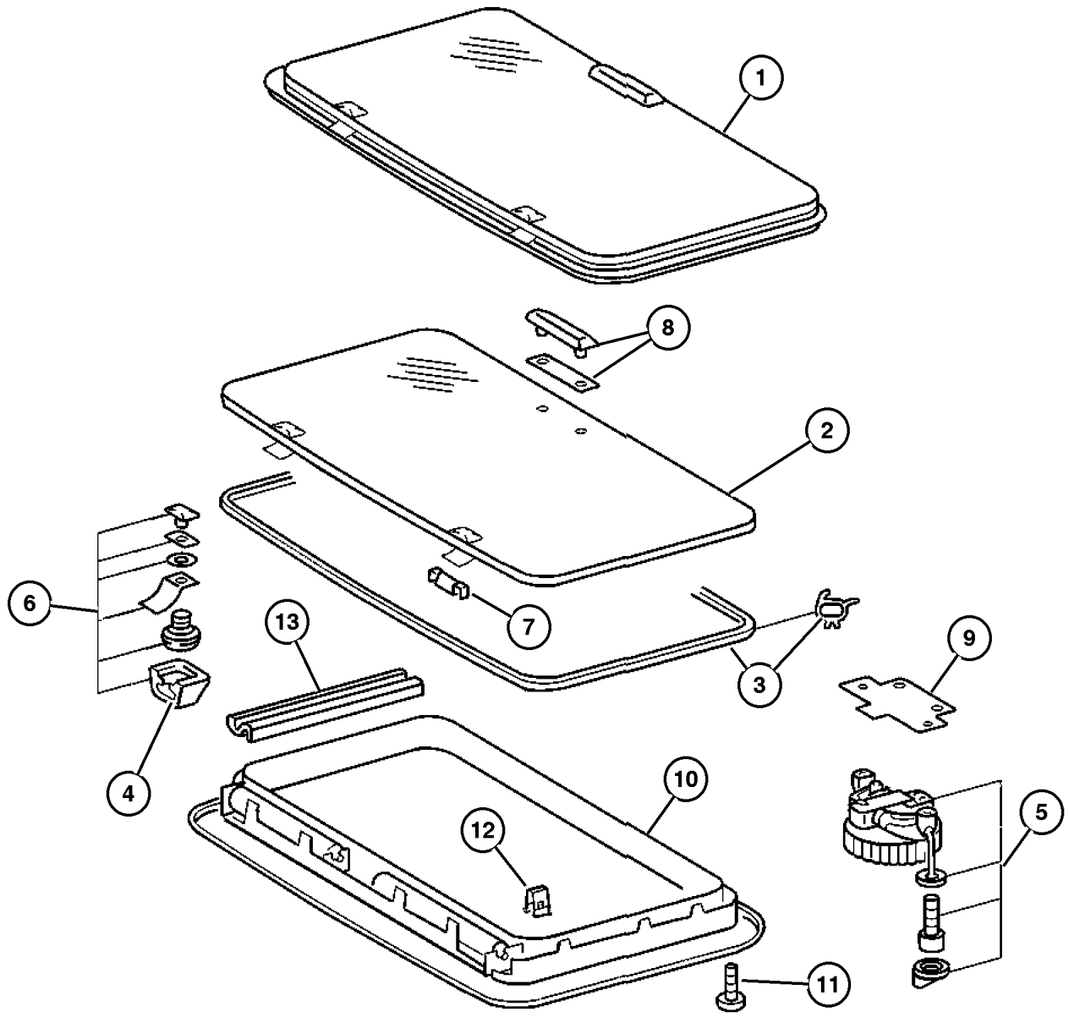

ITEM	PART NUMBER	QTY	LINE	SERIES	BODY	ENGINE	TRANS	TRIM	DESCRIPTION
		1	3, 7		02, 06				
		1	3, 7		12, 15, 16				
5									HANDLE, Sunroof
	5134 008AA	1	2, 6		01, 02, 06				
		1	2, 6		11, 12, 14, 15, 16				
		1	2, 6		51, 52, 54, 55, 56				
		1	3, 7		02, 06				
		1	3, 7		12, 15, 16				
6									HINGE, Sunroof
	5134 009AA	1	2, 6		01, 02, 06				
		1	2, 6		11, 12, 14, 15, 16				
		1	2, 6		51, 52, 54, 55, 56				
		1	3, 7		02, 06				
		1	3, 7		12, 15, 16				
7									HINGE, Sunroof
	5134 010AA	1	2, 6		01, 02, 06				
		1	2, 6		11, 12, 14, 15, 16				
		1	2, 6		51, 52, 54, 55, 56				
		1	3, 7		02, 06				
		1	3, 7		12, 15, 16				
8									PLATE, Sunroof
	5134 012AA	1	2, 6		01, 02, 06				
		1	2, 6		11, 12, 14, 15, 16				

Refer to Model Legend Information Bookmark

AR = Use as required - = Non illustrated part # = New this model year

March 3, 2006

« RETURN TO GROUP INDEX

Manual Sunroof
Figure SVA-1210

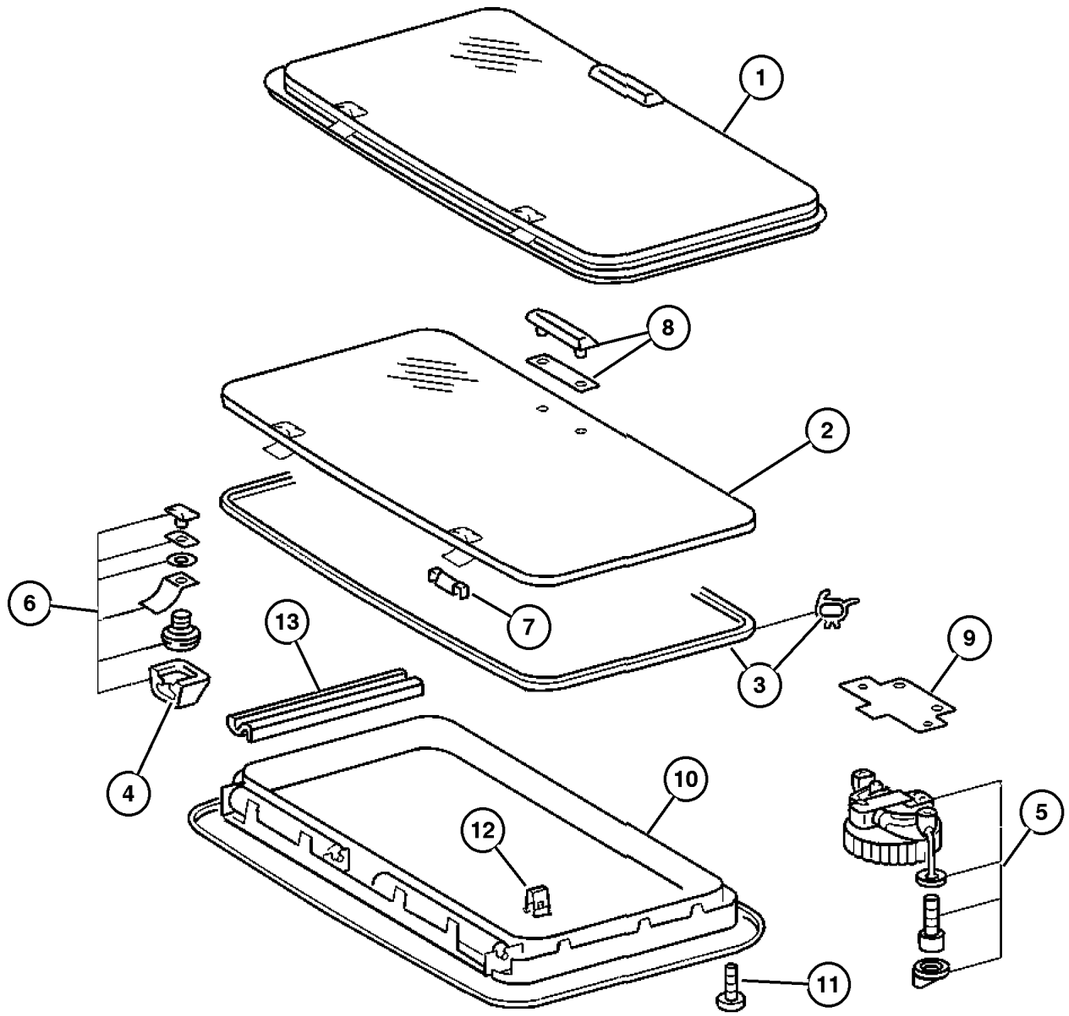

ITEM	PART NUMBER	QTY	LINE	SERIES	BODY	ENGINE	TRANS	TRIM	DESCRIPTION
		1	2, 6		51, 52, 54, 55, 56				
		1	3, 7		02, 06				
		1	3, 7		12, 15, 16				
9	5134 011AA	1	2, 6		01, 02, 06				PLATE, Sunroof
		1	2, 6		11, 12, 14, 15, 16				
		1	2, 6		51, 52, 54, 55, 56				
		1	3, 7		02, 06				
		1	3, 7		12, 15, 16				
10	5124 714AA	1	2, 6		01, 02, 06				FRAME, Sunroof
		1	2, 6		11, 12, 14, 15, 16				
		1	2, 6		51, 52, 54, 55, 56				
		1	3, 7		02, 06				
		1	3, 7		12, 15, 16				
	5124 715AA	1	2, 6		01, 02, 06				Without Double Shade
		1	2, 6		11, 12, 14, 15, 16				Without Double Shade
		1	2, 6		51, 52, 54, 55, 56				Without Double Shade
		1	3, 7		02, 06				Without Double Shade
		1	3, 7		12, 15, 16				Without Double Shade
11	5126 276AA	24	2, 6		01, 02, 06				SCREW

Refer to Model Legend Information Bookmark

AR = Use as required - = Non illustrated part # = New this model year

March 3, 2006

Manual Sunroof
Figure SVA-1210

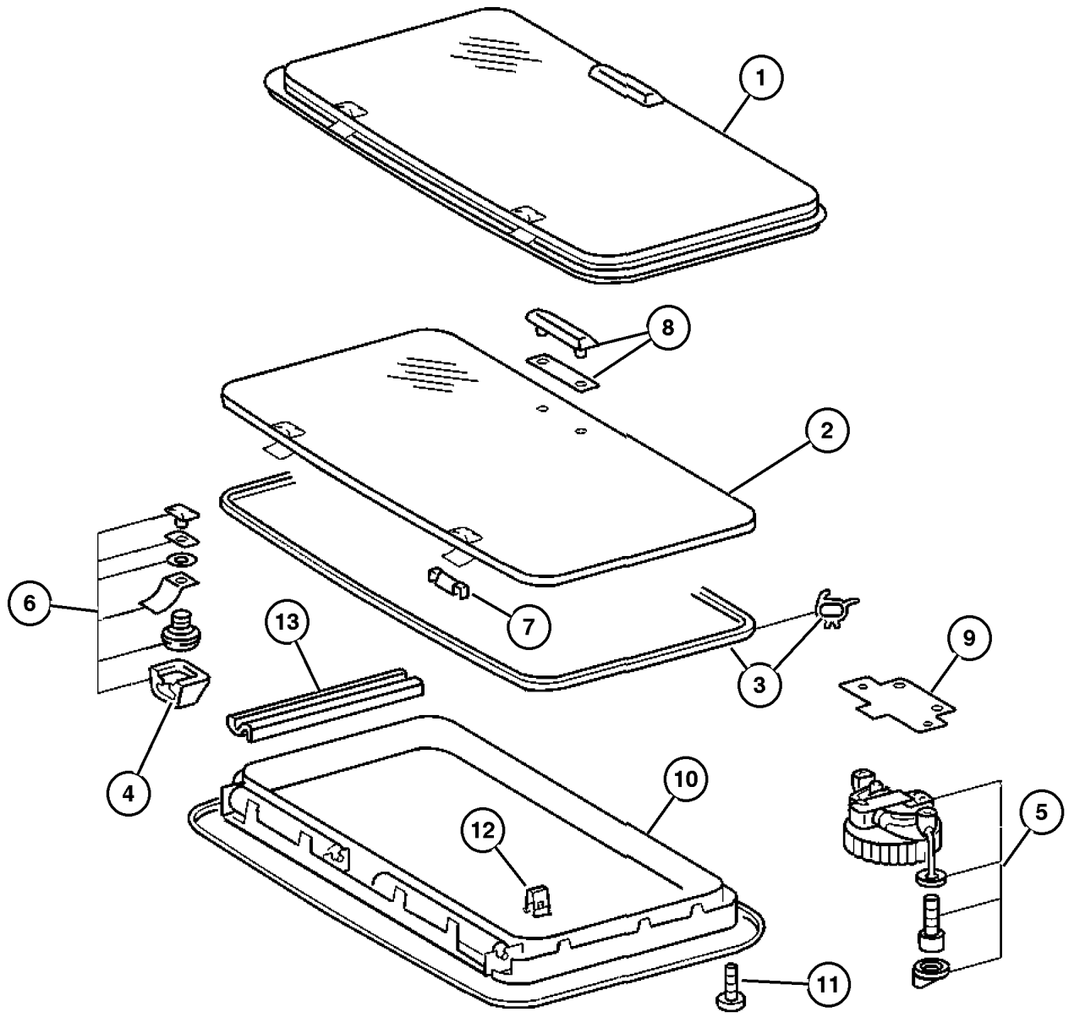

ITEM	PART NUMBER	QTY	LINE	SERIES	BODY	ENGINE	TRANS	TRIM	DESCRIPTION
		24	2, 6		11, 12, 14, 15				
		24	2, 6		16				
		24	2, 6		51, 52, 54, 55				
		24	2, 6		56				
		24	3, 7		02, 06				
		24	3, 7		16				
		24	3, 7		12, 15				
12									CLIP, Sunroof
	5125 572AA	14	2, 6		01, 02, 06				
		14	2, 6		11, 12, 14, 15, 16				
		14	2, 6		51, 52, 54, 55, 56				
		14	3, 7		02, 06				
		14	3, 7		12, 15, 16				
13									SUPPORT
	5104 495AA	2	2, 6		01, 02, 06				
		2	2, 6		11, 12, 14, 15, 16				
		2	2, 6		51, 52, 54, 55, 56				
		2	3, 7		02, 06				
		2	3, 7		12, 15, 16				

Refer to Model Legend Information Bookmark

AR = Use as required - = Non illustrated part # = New this model year

March 3, 2006

« RETURN TO GROUP INDEX

Fixed Sunroof
Figure SVA-1220

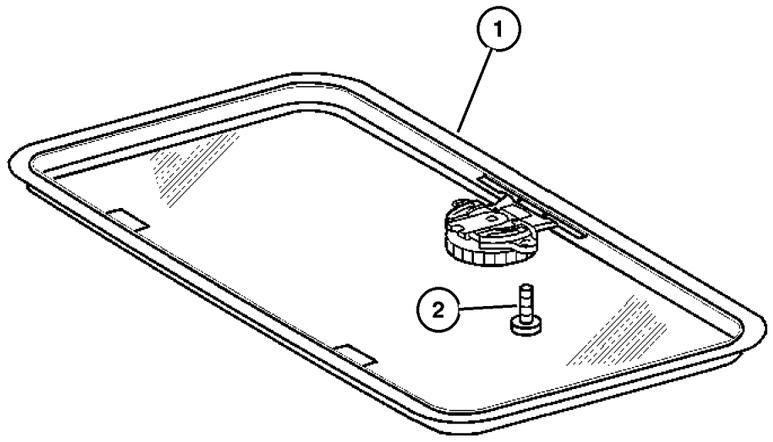

ITEM	PART NUMBER	QTY	LINE	SERIES	BODY	ENGINE	TRANS	TRIM	DESCRIPTION
1									GLASS, Sunroof
	5104 480AA	1	2, 6		11, 12, 14, 15				
		2	2, 6		16				
		1	2, 6		51, 52, 54, 55				
		2	2, 6		56				
		1	3, 7		12, 15				
		2	3, 7		16				
2									SCREW
	5126 276AA	24	2, 6		11, 12, 14, 15				
		48	2, 6		16				
		24	2, 6		51, 52, 54, 55				
		48	2, 6		56				
		24	3, 7		12, 15				
		48	3, 7		16				

Refer to Model Legend Information Bookmark

Group – LBLS

Labels All Vehicle Locations

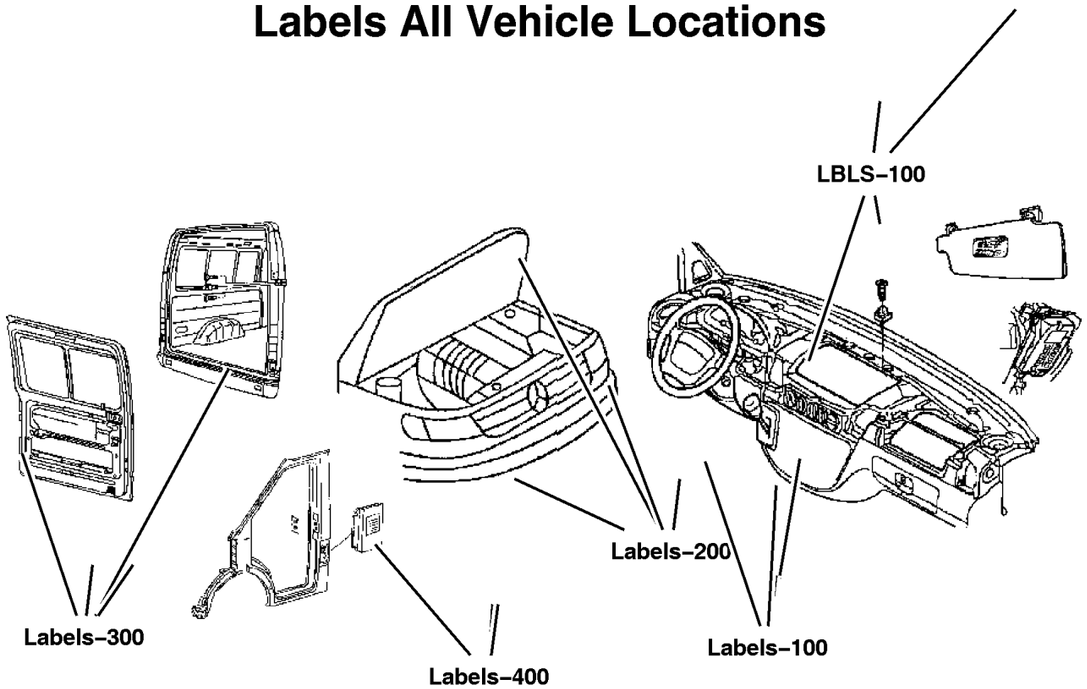

GROUP LBLS - Labels All Vehicle Locations

Illustration Title	Group-Fig. No.
Interior	
Instrument Panel / Visors & Interior	Fig. LBLS-105
Under Hood	
Engine Compartment	Fig. LBLS-205
Doors	
Front / Side & Cargo	Fig. LBLS-305
Exterior	
Fuel Door & Filler	Fig. LBLS-410

LBLS–100 Interior	LBLS–200 Under Hood	LBLS–300 Doors	LBLS–400 Exterior
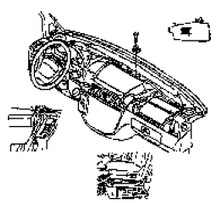		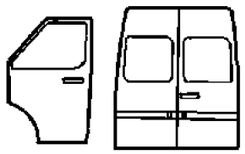	

Instrument Panel / Visors & Interior
Figure LBLS-105

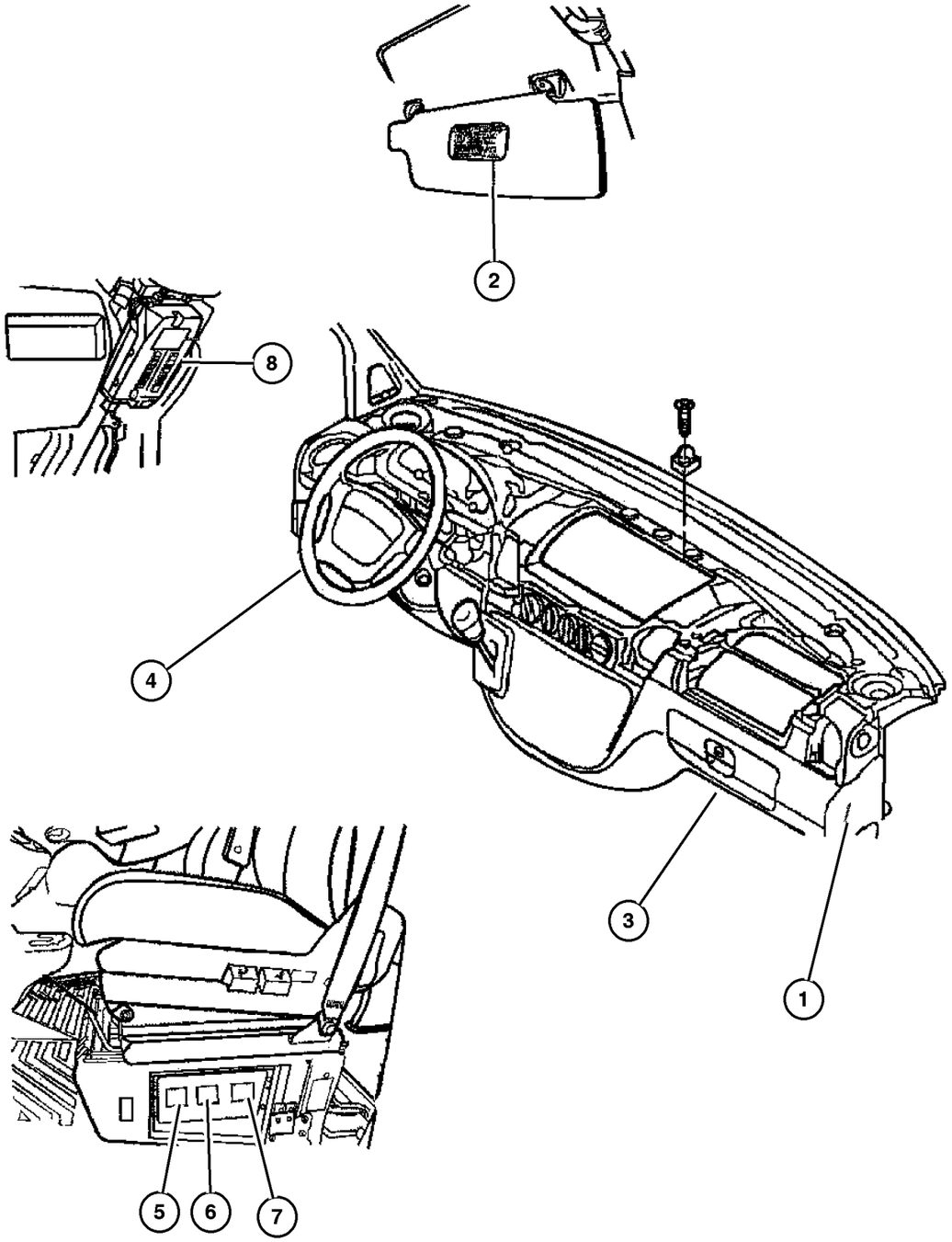

ITEM	PART NUMBER	QTY	LINE	SERIES	BODY	ENGINE	TRANS	TRIM	DESCRIPTION
1									LABEL, Airbag
	5096 894AA	1		L	01, 02, 06	EX8			
		1		L	11, 12, 14, 15, 16	EX8			
		1		L	51, 52, 54, 55, 56	EX8			
		1		L	02, 06	EX8			
		1		L	12, 15, 16	EX8			
2									LABEL, Airbag
	5161 821AA	1		L	01, 02, 06	EX8			
		1		L	11, 12, 14, 15, 16	EX8			
		1		L	51, 52, 54, 55, 56	EX8			
		1		L	02, 06	EX8			
		1		L	12, 15, 16	EX8			
3									LABEL, Airbag
	5140 792AA	2		L	01, 02, 06	EX8			Sunvisor
		4		L	01, 02, 06	EX8			
		2		L	11, 12, 14, 15, 16	EX8			
		4		L	11, 12, 14, 15, 16	EX8			
		2		L	51, 52, 54, 55, 56	EX8			
4									LABEL, Warning
	5121 112AA	1		L	01, 02, 06	EX8			Electrical
		1		L	11, 12, 14, 15, 16	EX8			

Refer to Model Legend Information Bookmark

Instrument Panel / Visors & Interior
Figure LBLS-105

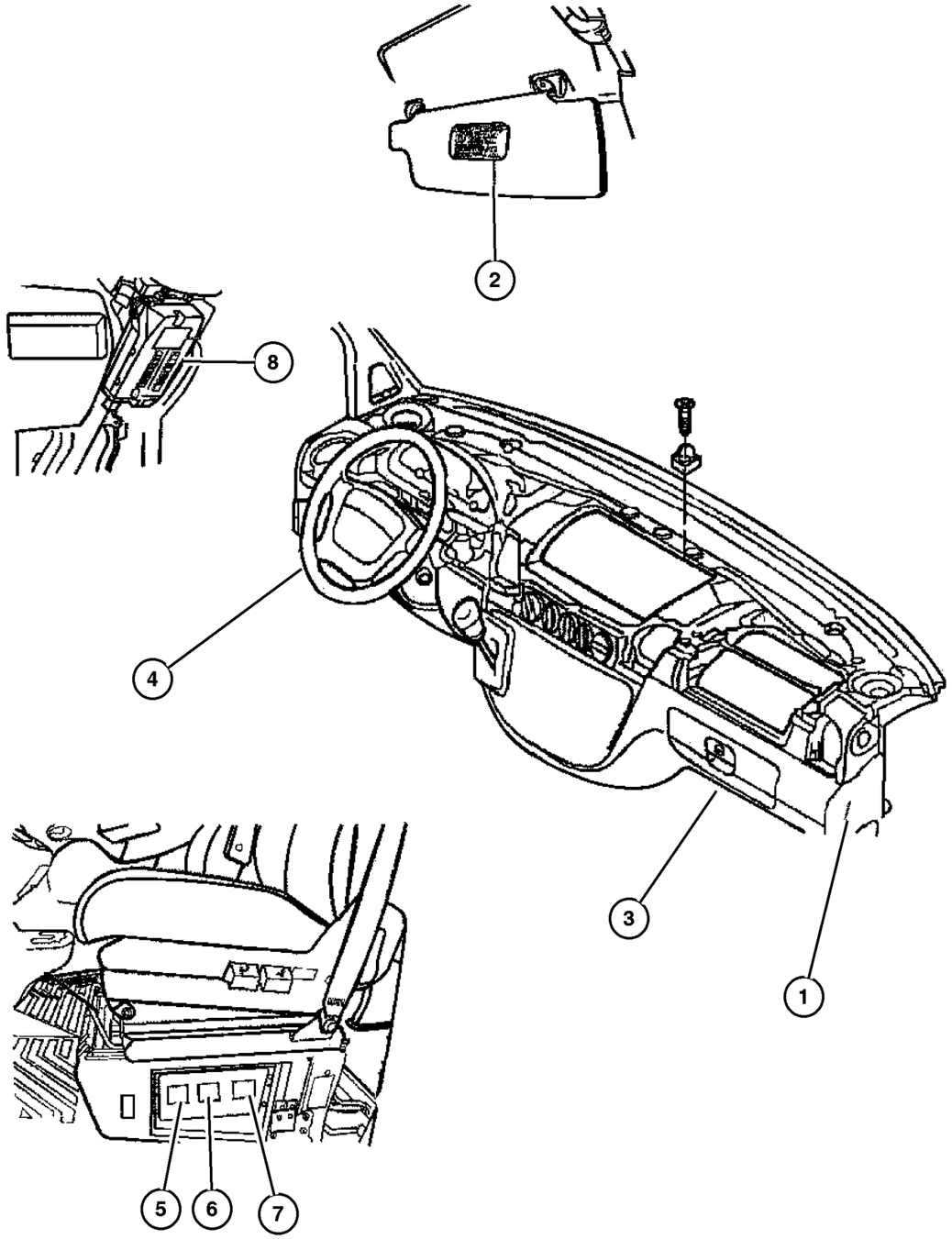

ITEM	PART NUMBER	QTY	LINE	SERIES	BODY	ENGINE	TRANS	TRIM	DESCRIPTION
		1		L	51, 52, 54, 55, 56	EX8			
5									LABEL, Fuse Block
	5121 129AA	1		L	01, 02, 06	EX8			
		1		L	11, 12, 14, 15, 16	EX8			
		1		L	51, 52, 54, 55, 56	EX8			
6									LABEL
	5121 077AA	1		L	01, 02, 06	EX8			
		1		L	11, 12, 14, 15, 16	EX8			
		1		L	51, 52, 54, 55, 56	EX8			
7									LABEL, Tire, PRECISION PRINTERS ~~P.O. BOX 26 ~~CEDAR RIDGE, CA 95924 ~~FAX: 530-273-2878
									~~CONTACT: LISA ~~800-252-8660 ~~FREIGHTLINER P, (NOT SERVICED) (Not Serviced)
8									LABEL, Airbag
	5161 821AA	1		L	11, 12, 14, 15, 16	EX8			
		1		L	51, 52, 54, 55, 56	EX8			
		1		L	02, 06	EX8			
		1		L	12, 15, 16	EX8			

Refer to Model Legend Information Bookmark

Engine Compartment
Figure LBLS-205

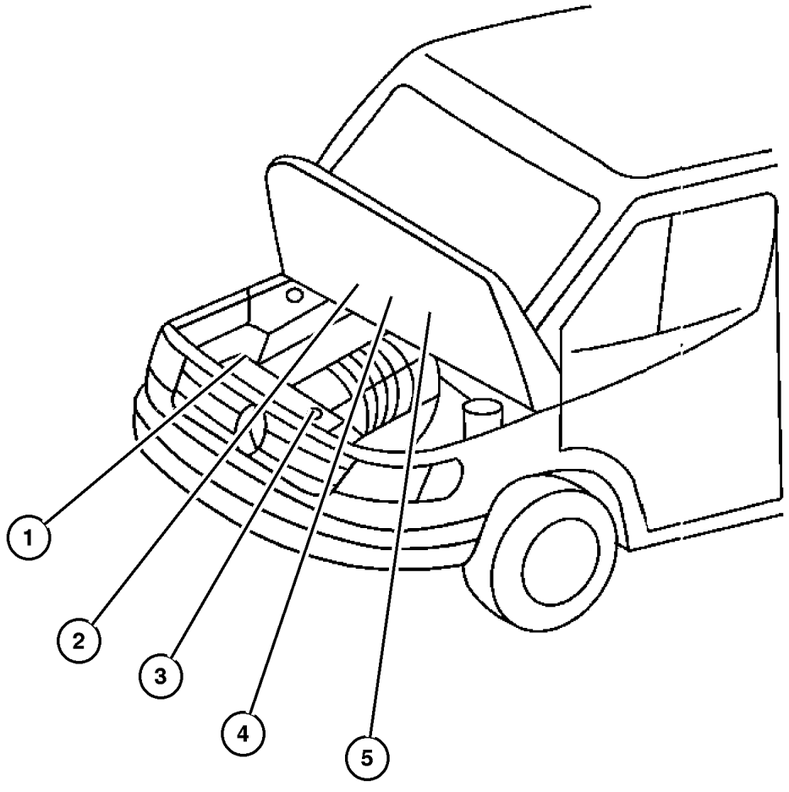

ITEM	PART NUMBER	QTY	LINE	SERIES	BODY	ENGINE	TRANS	TRIM	DESCRIPTION
1									LABEL, Fan Caution
	5104 155AA	1		L	01, 02, 06	EX8			
		1		L	11, 12, 14, 15, 16	EX8			
		1		L	51, 52, 54, 55, 56	EX8			
		1		L	02, 06	EX8			
		1		L	12, 15, 16	EX8			
2									LABEL, A/C Spec.
	5124 359AA	1		L	01, 02, 06	EX8			
		1		L	11, 12, 14, 15, 16	EX8			
		1		L	51, 52, 54, 55, 56	EX8			
		1		L	02, 06	EX8			
		1		L	12, 15, 16	EX8			
3									LABEL, Coolant Warning
	5104 154AA	1		L	01, 02, 06	EX8			
		1		L	11, 12, 14, 15, 16	EX8			
		1		L	51, 52, 54, 55, 56	EX8			
		1		L	12, 15, 16	EX8			
		1		L	02, 06	EX8			
4									LABEL, Adhesive Foil
	5121 165AA	1		L	01, 02, 06	EX8			
		1		L	11, 12, 14, 15, 16	EX8			
		1		L	51, 52, 54, 55, 56	EX8			

Refer to Model Legend Information Bookmark

AR = Use as required - = Non illustrated part # = New this model year

March 3, 2006

« RETURN TO GROUP INDEX

»

Engine Compartment
Figure LBLS-205

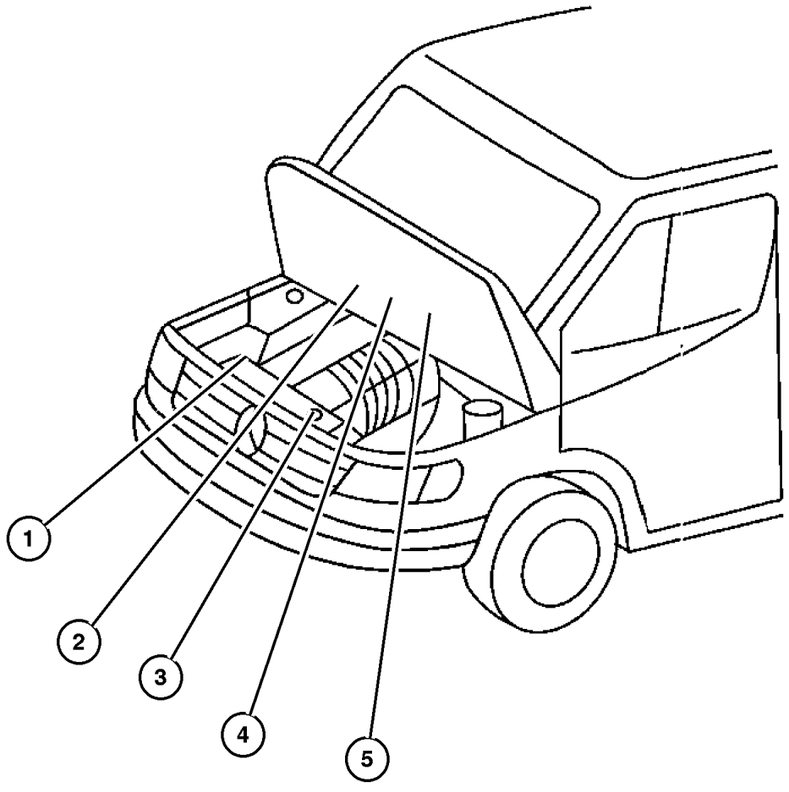

ITEM	PART NUMBER	QTY	LINE	SERIES	BODY	ENGINE	TRANS	TRIM	DESCRIPTION
		1		L	12, 15, 16	EX8			
		1		L	02, 06	EX8			
5	5121 159AA	1		L	01, 02, 06	EX8			LABEL, Tire Pressure
		1		L	11, 12, 14, 15, 16	EX8			
		1		L	51, 52, 54, 55, 56	EX8			
		1		L	12, 15, 16	EX8			
		1		L	02, 06	EX8			

Refer to Model Legend Information Bookmark

AR = Use as required - = Non illustrated part # = New this model year

March 3, 2006

« RETURN TO GROUP INDEX

Front / Side & Cargo
Figure LBLS-305

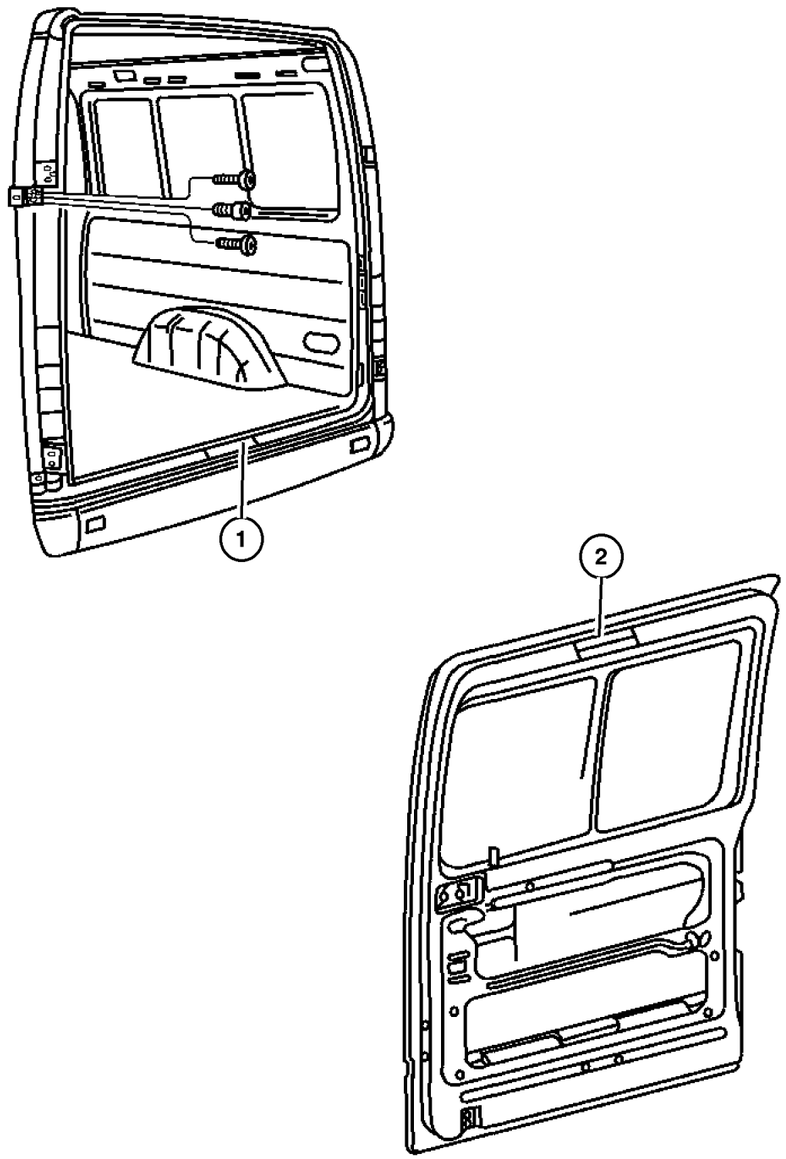

ITEM	PART NUMBER	QTY	LINE	SERIES	BODY	ENGINE	TRANS	TRIM	DESCRIPTION
1									LABEL
	5124 356AA	1		L	12, 15	EX8			
		1		L	12, 15, 16	EX8			
2									LABEL, Warning
	5121 112AA	1		L	01, 02, 06	EX8			Electrical
		1		L	11, 12, 14, 15, 16	EX8			Electrical
		1		L	51, 52, 54, 55, 56	EX8			Electrical
	5121 162AA	1		L	11, 12, 14, 15, 16	EX8			Sliding Pattitioms Door
		1		L	12, 15, 16	EX8			Sliding Pattitioms Door

Refer to Model Legend Information Bookmark

AR = Use as required - = Non illustrated part # = New this model year

March 3, 2006

RETURN TO GROUP INDEX

Fuel Door & Filler
Figure LBLS-410

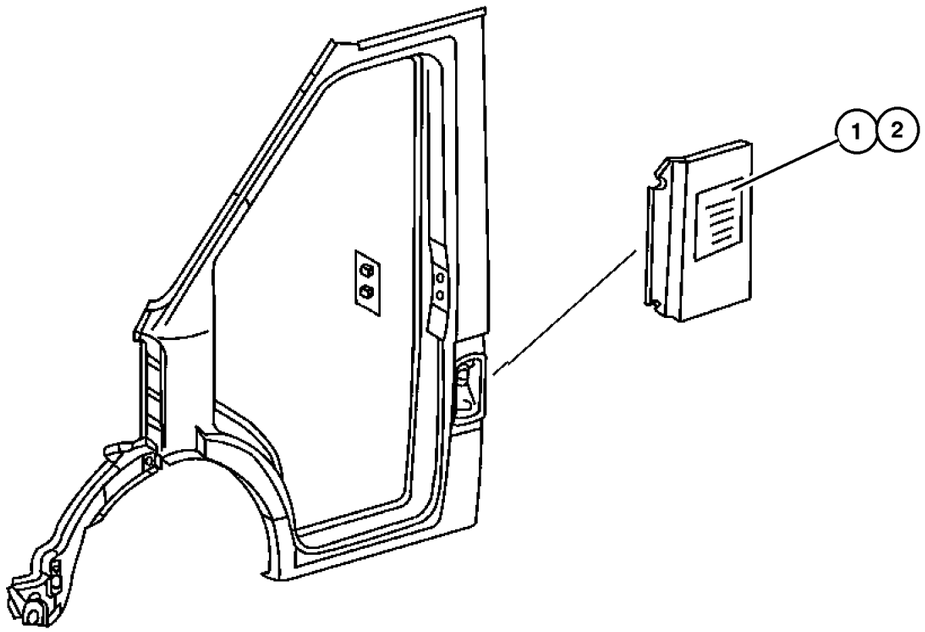

ITEM	PART NUMBER	QTY	LINE	SERIES	BODY	ENGINE	TRANS	TRIM	DESCRIPTION
1									LABEL, Fuel
	5104 152AA	1		L	11, 12, 14, 15, 16	EX8			
		1		L	51, 52, 54, 55, 56	EX8			
2									LABEL, Diesel Fuel
	5104 153AA	1		L	11, 12, 14, 15, 16	EX8			
		1		L	51, 52, 54, 55, 56	EX8			

Refer to Model Legend Information Bookmark

AR = Use as required - = Non illustrated part # = New this model year

March 3, 2006

« RETURN TO GROUP INDEX